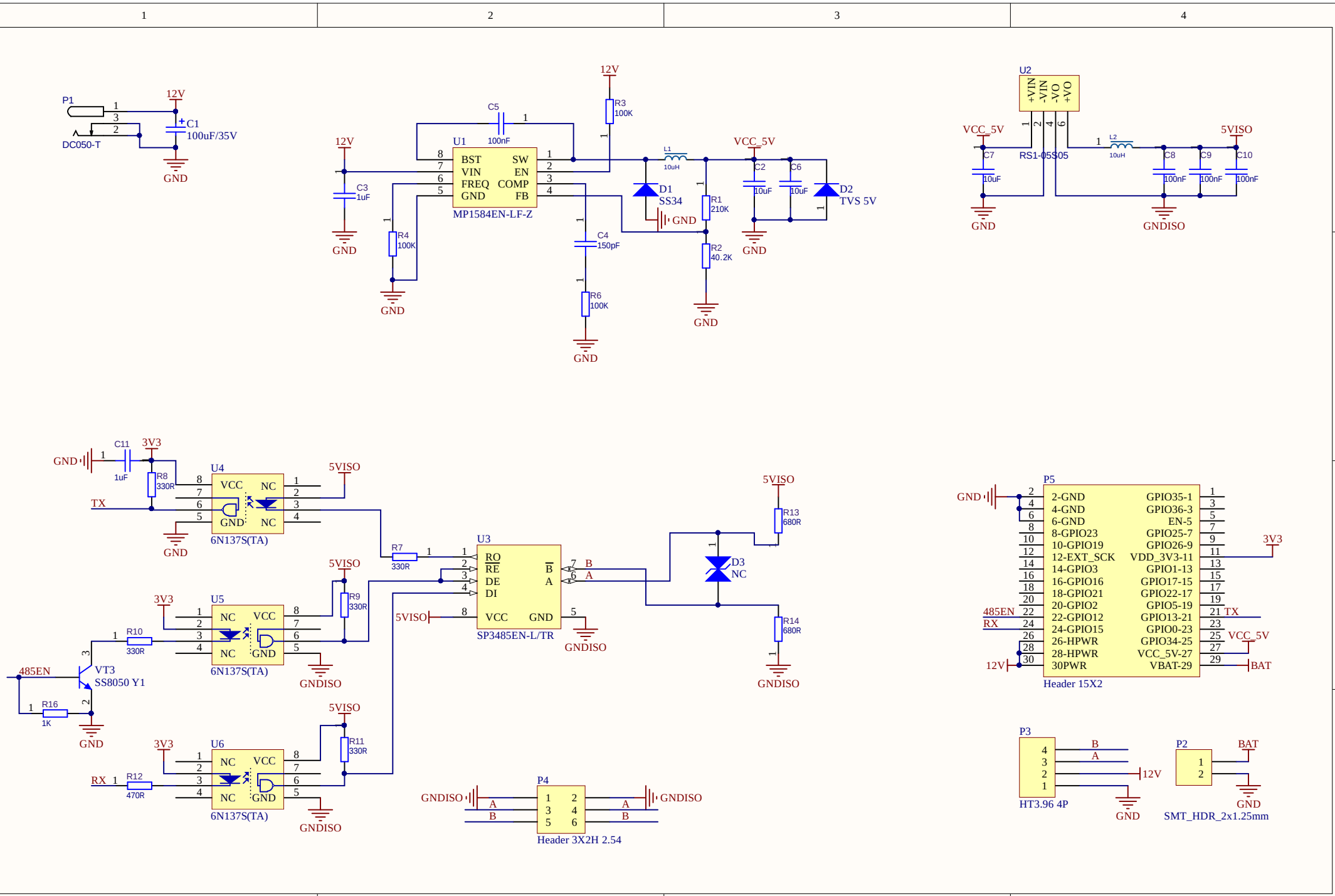
P1
DC050-T
12V
C1
100uF/35V
GND
U1
MP1584EN-LF-Z
BST
VIN
FREQ
GND
SW
EN
COMP
FB
C5
100nF
C3
1uF
R4
100K
R3
100K
L1
10uH
D1
SS34
R1
210K
R2
40.2K
C4
150pF
R6
100K
VCC_5V
C2
10uF
C6
10uF
D2
TVS 5V
U2
RS1-05S05
+VIN
-VIN
-VO
+VO
C7
10uF
L2
10uH
C8
100nF
C9
100nF
C10
100nF
5VISO
GNDISO
C11
1uF
3V3
R8
330R
U4
6N137S(TA)
VCC
NC
GND
TX
R7
330R
U3
SP3485EN-L/TR
RO
RE
DE
DI
VCC
GND
B
A
R13
680R
R14
680R
D3
NC
U5
6N137S(TA)
R9
330R
R10
330R
485EN
VT3
SS8050 Y1
R16
1K
U6
6N137S(TA)
RX
R12
470R
R11
330R
P4
Header 3X2H 2.54
P5
Header 15X2
2-GND
4-GND
6-GND
8-GND23
10-GPIO19
12-EXT_SCK
14-GPIO3
16-GPIO16
18-GPIO21
20-GPIO2
22-GPIO12
24-GPIO15
26-HPWR
28-HPWR
30PWR
GPIO35-1
GPIO36-3
EN-5
GPIO25-7
GPIO26-9
VDD_3V3-11
GPIO1-13
GPIO17-15
GPIO22-17
GPIO5-19
GPIO13-21
GPIO0-23
GPIO34-25
VCC_5V-27
VBAT-29
TX
VCC_5V
BAT
P3
HT3.96 4P
P2
SMT_HDR_2x1.25mm