ERECTOR NOTE:
1. WIRE BRUSH SHOP PRIMER OR GALVANIZED SURFACE AS REQ'D FOR FIELD WELDING.
2. TOUCHUP ALL FIELD WELDS WITH ZINC RICH PAINT AT GALVANIZED STEEL SURFACE.
3. TOUCHUP ALL FIELD WELDS WITH PRIMER AT PRIMED STEEL.

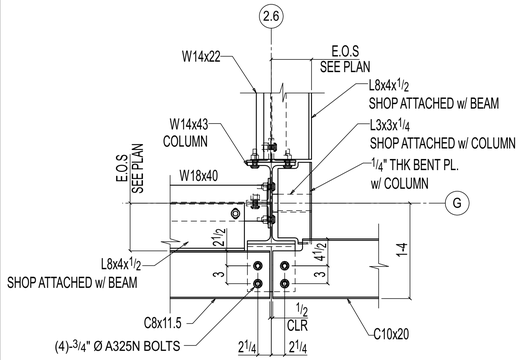

1 SE221 DETAIL
(OTHERS NOT SHOWN FOR CLARITY)

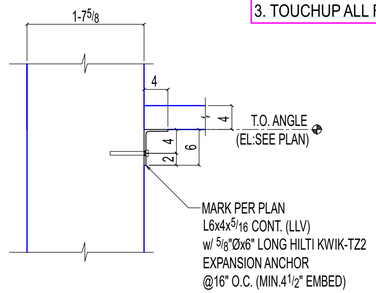

2 SE221 SECTION
(REF: 6/S500)
OTHERS NOT SHOWN FOR CLARITY

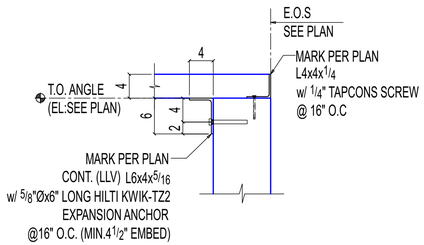

3 SE221 SECTION
(REF: 5/S501)
OTHERS NOT SHOWN FOR CLARITY

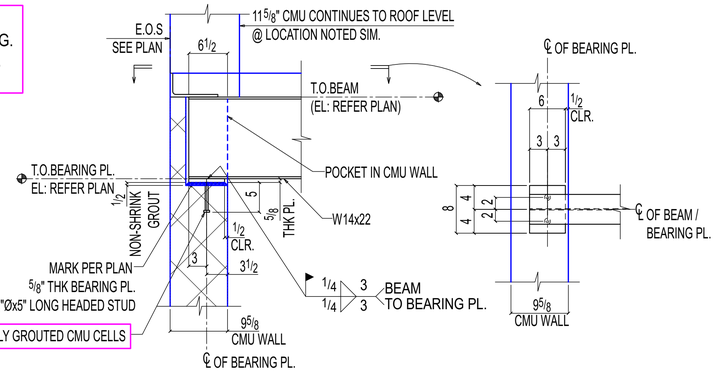

4 SE221 SECTION
(REF: 1/S303)
OTHERS NOT SHOWN FOR CLARITY

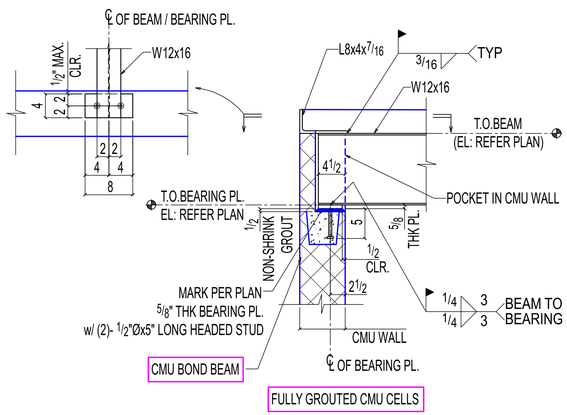

5 SE221 SECTION
(REF: 1/S303)
OTHERS NOT SHOWN FOR CLARITY

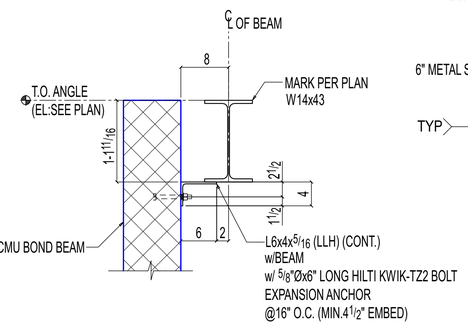

6 SE221 SECTION
(REF: 1/S501)
OTHERS NOT SHOWN FOR CLARITY

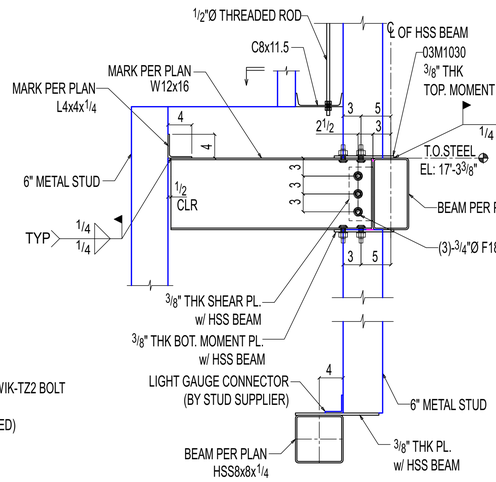

7 SE221 SECTION
(REF: 13/S500)
OTHERS NOT SHOWN FOR CLARITY

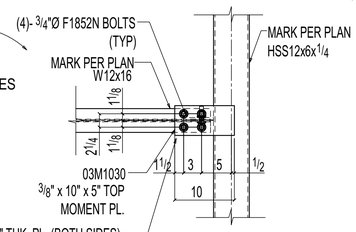

OTHERS NOT SHOWN
FOR CLARITY

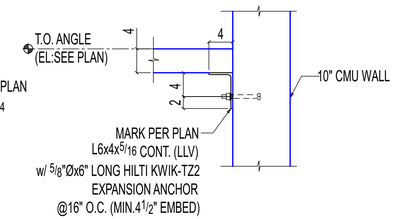

8 SE221 SECTION
(REF: 1/S501)
OTHERS NOT SHOWN FOR CLARITY

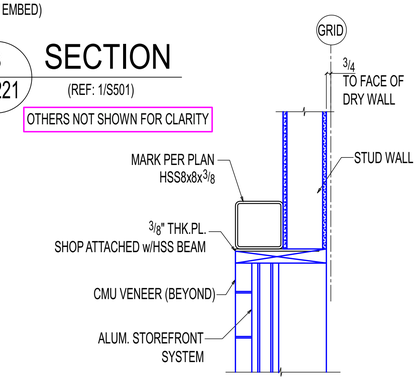

9 SE221 SECTION
(REF: 3/A421)
OTHERS NOT SHOWN FOR CLARITY

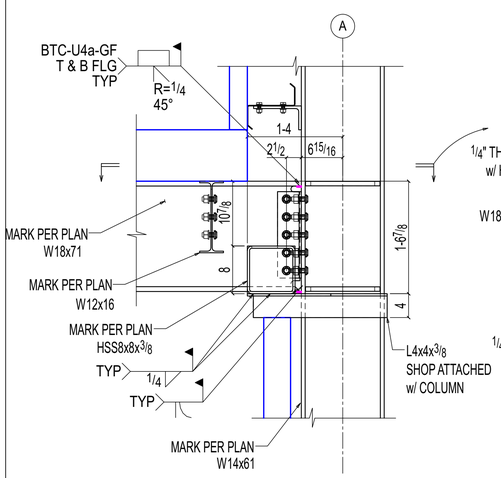

10 SE221 SECTION
(REF: 1/S500)
OTHERS NOT SHOWN FOR CLARITY

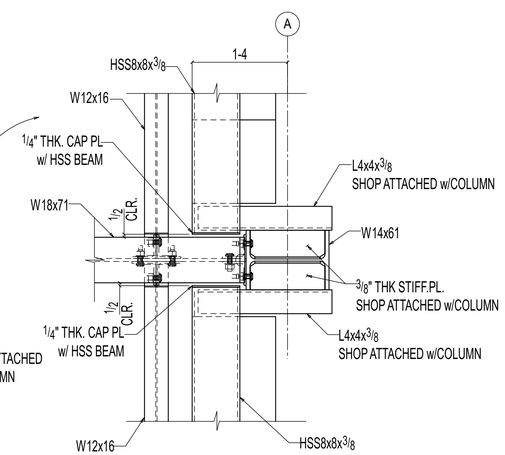

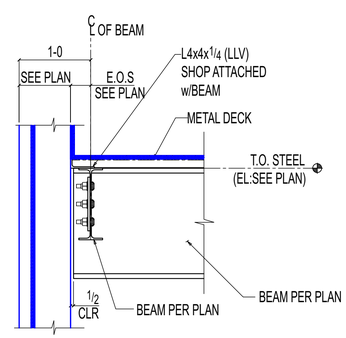

11 SE221 SECTION
OTHERS NOT SHOWN FOR CLARITY

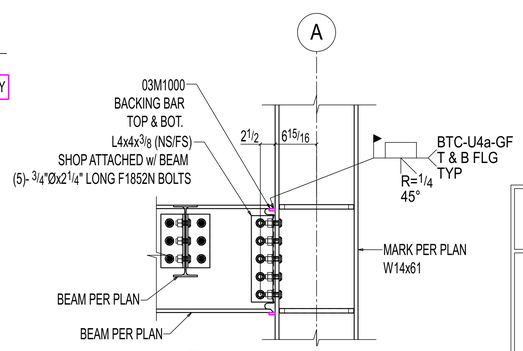

12 SE221 SECTION
(REF: 1/S500)
OTHERS NOT SHOWN FOR CLARITY

THE INFORMATION NOTED HEREON THIS DRAWING IS THE PROPERTY OF STEEL FAB ENTERPRISES, INC. AND SHALL NOTED BE USED WITHOUT WRITTEN CONSENT.

STEEL FAB
ENTERPRISES, LLC
MISCELLANEOUS METALS FABRICATOR AND ERECTORS
623 BAUMGARDNER ROAD, LANCASTER, PA 17603
TEL. (717)464-0330 FAX (717)464-9464
WWW.STEELFABENTERPRISES.COM

AISC CERTIFIED FABRICATOR AND ERECTOR

REVISIONS

REV#	DWN BY	DESCRIPTION	DATE
A	SRP	ISSUED FOR APPROVAL	Jun 11 2025
0	GSV	ISSUED FOR CONSTRUCTION	Sep 5 2025

PROJECT OWNER : CK CAPITAL, LLC
PROJECT DESCRIPTION : CLEVELAND BROTHERS-MILESBURG
PROJECT ADDRESS : 1025N. EAGLE VALLEY ROAD, HOWARD, PA 16841
CONTRACTOR : KINSLEY CONSTRUCTION, INC.

DRAWN BY : BAS	DATE : 05-20-25	PROJ. NO. : 25012	REV # 0
CHECKED BY : SRP	DATE : 05-20-25	DWG NO. : SE221	

DWG DESCRIPTION : SECTION & DETAILS