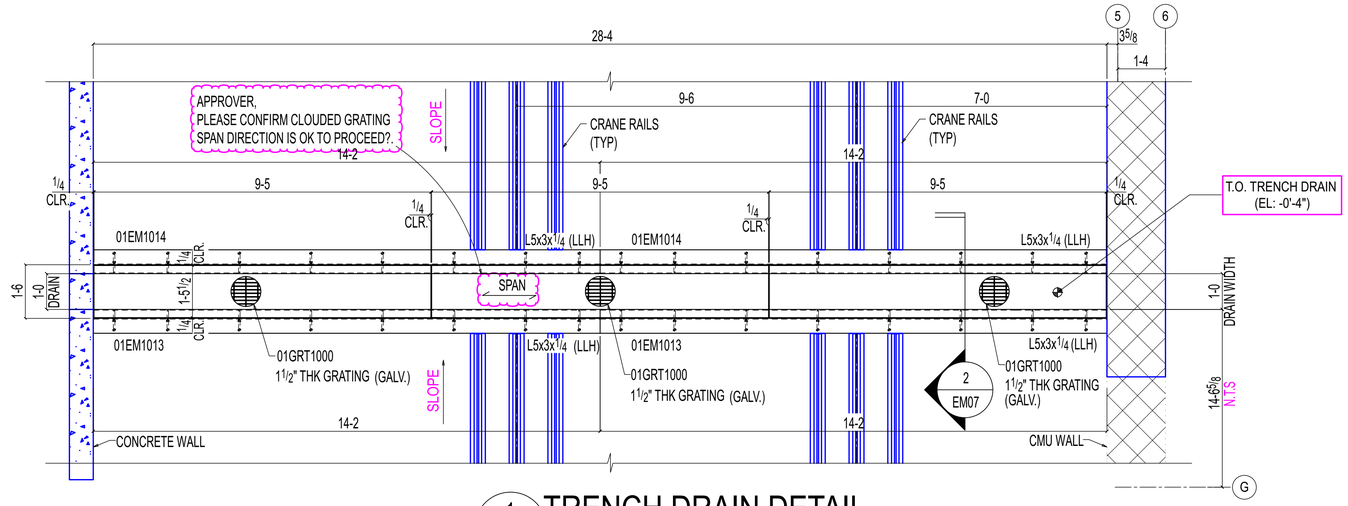

1 EM06 TRENCH DRAIN DETAIL

(REF: 1/S101,2/S101 & 1/A101)

OTHERS NOT SHOWN FOR CLARITY

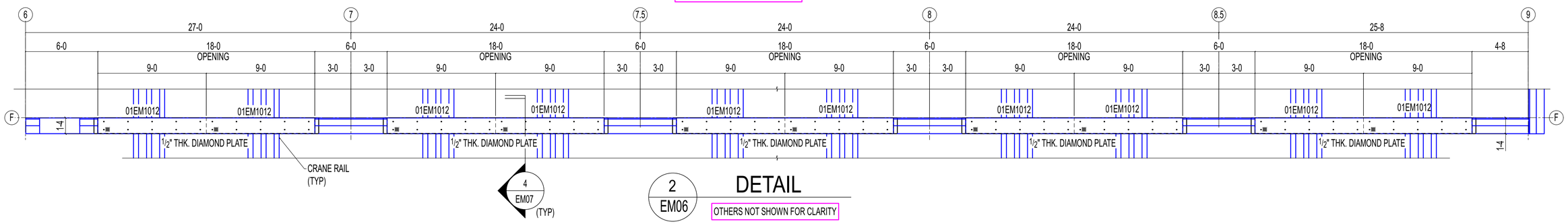

2 EM06 DETAIL

OTHERS NOT SHOWN FOR CLARITY

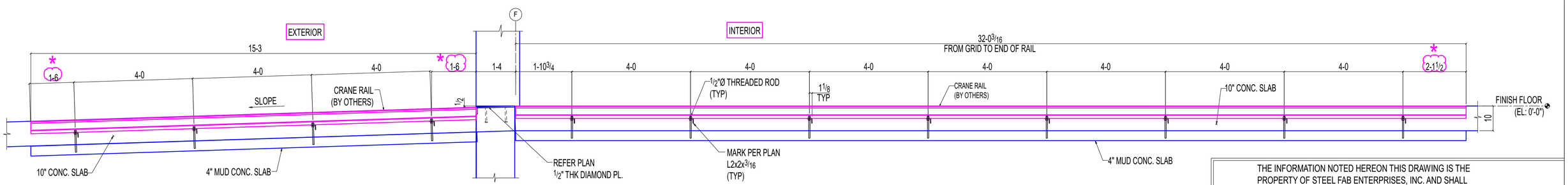

3 EM06 ELEVATION

OTHERS NOT SHOWN FOR CLARITY

NOTE:
1. ALL ANGLES ARE TO BE L2x2x3/16 U.N.O.

* -APPROVER,
PLEASE CONFIRM CLOUDED RAIL SUPPORT
ANGLE LOCATONS ARE OK TO PROCEED?.

THE INFORMATION NOTED HEREON THIS DRAWING IS THE PROPERTY OF STEEL FAB ENTERPRISES, INC. AND SHALL NOTED BE USED WITHOUT WRITTEN CONSENT.

STEEL FAB
ENTERPRISES, LLC
AISC CERTIFIED FABRICATOR AND ERECTOR
MISCELLANEOUS METALS FABRICATOR AND ERECTORS
623 BAUMGARDNER ROAD, LANCASTER, PA 17603
TEL. (717)464-0330 FAX (717)464-9464
WWW.STEELFABENTERPRISES.COM

REVISIONS

REV#	DWN BY	DESCRIPTION	DATE
A	GSV	ISSUED FOR APPROVAL	May 27 2025

PROJECT OWNER : CK CAPITAL, LLC

PROJECT DESCRIPTION : CLEVELAND BROTHERS-MILESBURG

PROJECT ADDRESS : 1025N. EAGLE VALLEY ROAD, HOWARD, PA 16841

CONTRACTOR : KINSLEY CONSTRUCTION, INC.

DRAWN BY : BAS	DATE : 5-20-25	PROJ. NO. : 25012	REV # A
CHECKED BY : SRP	DATE : 5-20-25	DWG NO. : EM06	

DWG DESCRIPTION : DETAIL & ELEVATION