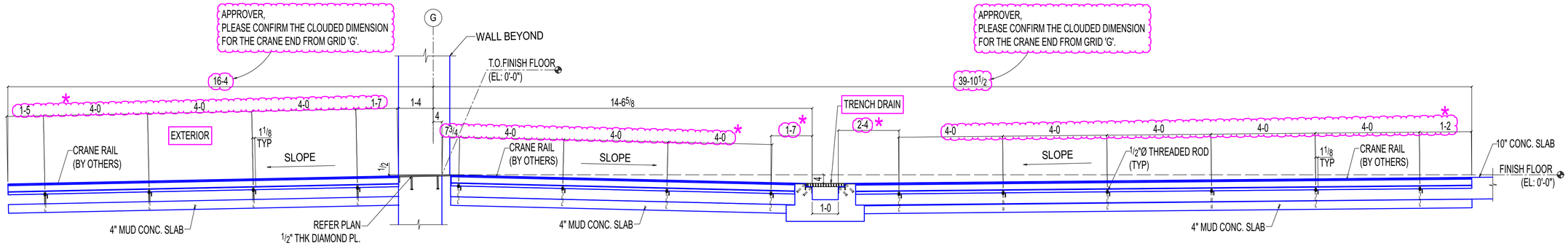


## 1 EM07 ELEVATION

OTHERS NOT SHOWN FOR CLARITY

APPROVER,
* -PLEASE CONFIRM CLOUDED CRANE RAIL
SUPPORT ANGLE LOCATIONS ARE OK TO PROCEED?.

NOTE:
1. ALL ANGLES ARE TO BE L2x2x3/16 (L.L.H) U.N.O.

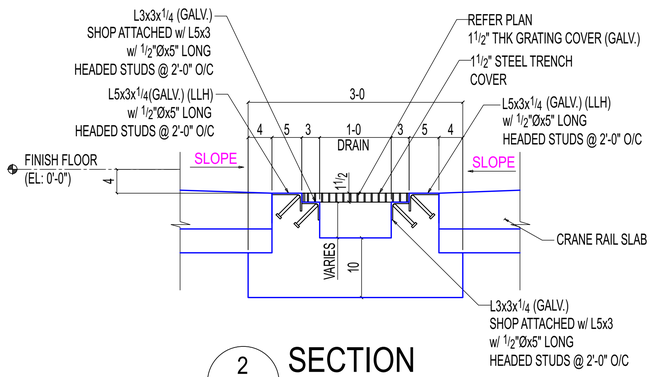


## 2 EM07 SECTION

(REF: 6/A173) (1/S401)

OTHERS NOT SHOWN FOR CLARITY

APPROVER,
# - PLEASE CONFIRM ANGLE EXTENSION
FROM CENTER OF RAIL.

APPROVER,
PLEASE CONFIRM CLOUDED
THREADED ROD LOCATION FROM
CENTER OF CRANE.

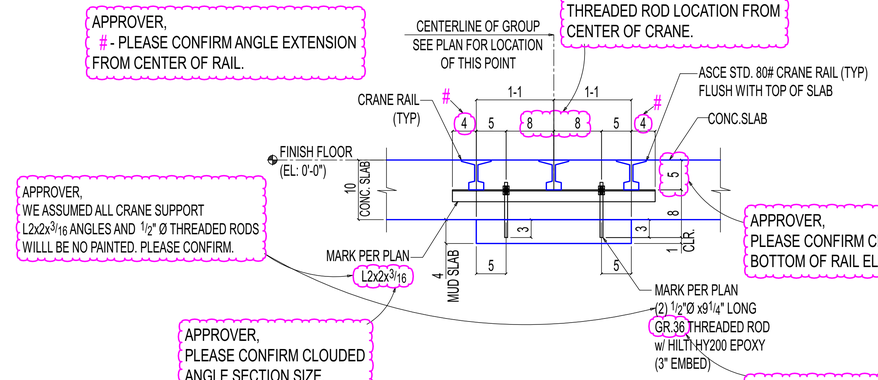


APPROVER,
WE ASSUMED ALL CRANE SUPPORT
L2x2x3/16 ANGLES AND 1/2" Ø THREADED RODS
WILLL BE NO PAINTED. PLEASE CONFIRM.

APPROVER,
PLEASE CONFIRM CLOUDED
BOTTOM OF RAIL ELEVATION.

APPROVER,
PLEASE CONFIRM CLOUDED
ANGLE SECTION SIZE.

APPROVER,
PLEASE CONFIRM CLOUDED THREADED ROD GRADE.

## 3 EM07 SECTION

( REF:5/S300 )

OTHERS NOT SHOWN FOR CLARITY

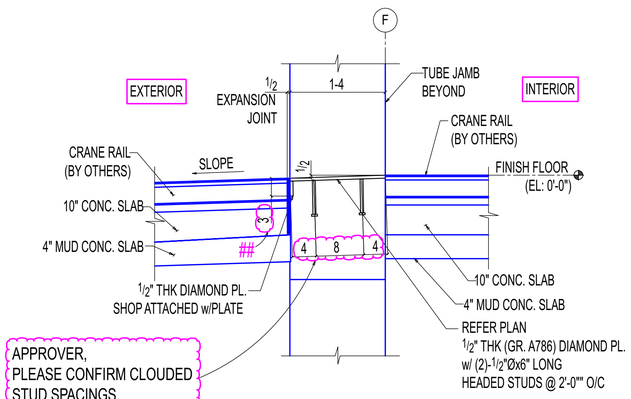


APPROVER,
PLEASE CONFIRM CLOUDED
STUD SPACINGS.

## 4 EM07 SECTION

( REF: 10/S400 & A518 )
S-2 (@CRANE RAIL TRACKS)

OTHERS NOT SHOWN FOR CLARITY

APPROVER,
PLEASE CONFIRM CLOUDED
EMBED PLATE LENGTH IS ACCEPTABLE.

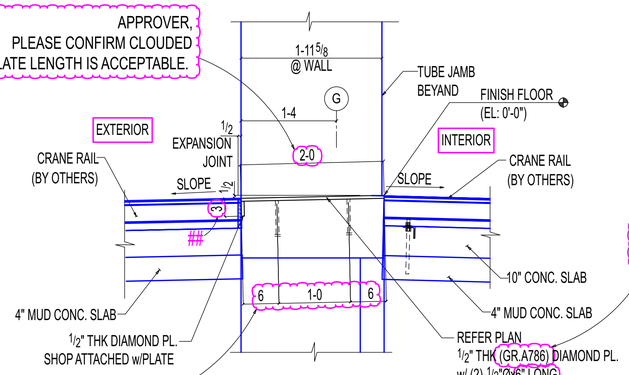


APPROVER,
PLEASE CONFIRM DIAMOND PLATE GRADE IS OK TO PROCEED?

APPROVER,
PLEASE CONFIRM CLOUDED STUD
SPACINGS ARE OK TO PROCEED?

APPROVER,
THE STRUCTURAL DRAWING 10/S400 INDICATES 6" LONG STUD,
WHILE ARCH SHEET S-2/A518 SHOWS 3" FOR THE SAME.
WE INTEND TO FOLLOW THE 6" LENGTH AS PER THE STRUCTURAL DRAWING.
PLEASE CONFIRM IF THIS IS ACCEPTABLE.

## 5 EM07 SECTION

( REF: 10/S400 & A518 )
S-2 (@CRANE RAIL TRACKS)

OTHERS NOT SHOWN FOR CLARITY

APPROVER,
## -PLEASE CONFIRM CLOUDED DIAMOND PLATE VERTICAL LEG.

## REVISIONS

| REV# | DWN BY | DESCRIPTION | DATE |
|---|---|---|---|
| A | GSV | ISSUED FOR APPROVAL | May 27 2025 |
| | | | |
| | | | |
| | | | |
| | | | |

THE INFORMATION NOTED HEREON THIS DRAWING IS THE
PROPERTY OF STEEL FAB ENTERPRISES, INC. AND SHALL
NOTED BE USED WITHOUT WRITTEN CONSENT.

STEEL FAB
ENTERPRISES, LLC
AISC CERTIFIED FABRICATOR AND ERECTOR
MISCELLANEOUS METALS FABRICATOR AND ERECTORS
623 BAUMGARDNER ROAD, LANCASTER, PA 17603
TEL. (717)464-0330 FAX (717)464-9464
WWW.STEELFABENTERPRISES.COM

PROJECT OWNER : CK CAPITAL, LLC

PROJECT DESCRIPTION : CLEVELAND BROTHERS-MILESBURG

PROJECT ADDRESS : 1025N. EAGLE VALLEY ROAD, HOWARD, PA 16841

CONTRACTOR : KINSLEY CONSTRUCTION, INC.

| | | | | |
|---|---|---|---|---|
| DRAWN BY : BAS | DATE : 5-20-25 | PROJ. NO. : | 25012 | REV # A |
| CHECKED BY : SRP | DATE : 5-20-25 | DWG NO. : | EM07 | |

DWG DESCRIPTION : SECTION & ELEVATION