APPROVER,
PLEASE CONFIRM THE ORIENTATION OF THE CLOUDED COLUMNS. THE ARCHITECTURAL DRAWINGS SHOW THE COLUMN WEB ALIGNED PARALLEL TO GRIDS 7 & 8, WHILE THE STRUCTURAL DRAWINGS INDICATE THE WEB IS PARALLEL TO GRID A. ACCORDINGLY, WE HAVE PROCEEDED WITH THE COLUMN WEB ORIENTATION PARALLEL TO GRID A, AS PER THE STRUCTURAL DRAWINGS. PLEASE CONFIRM IF THIS OK TO PROCEED?

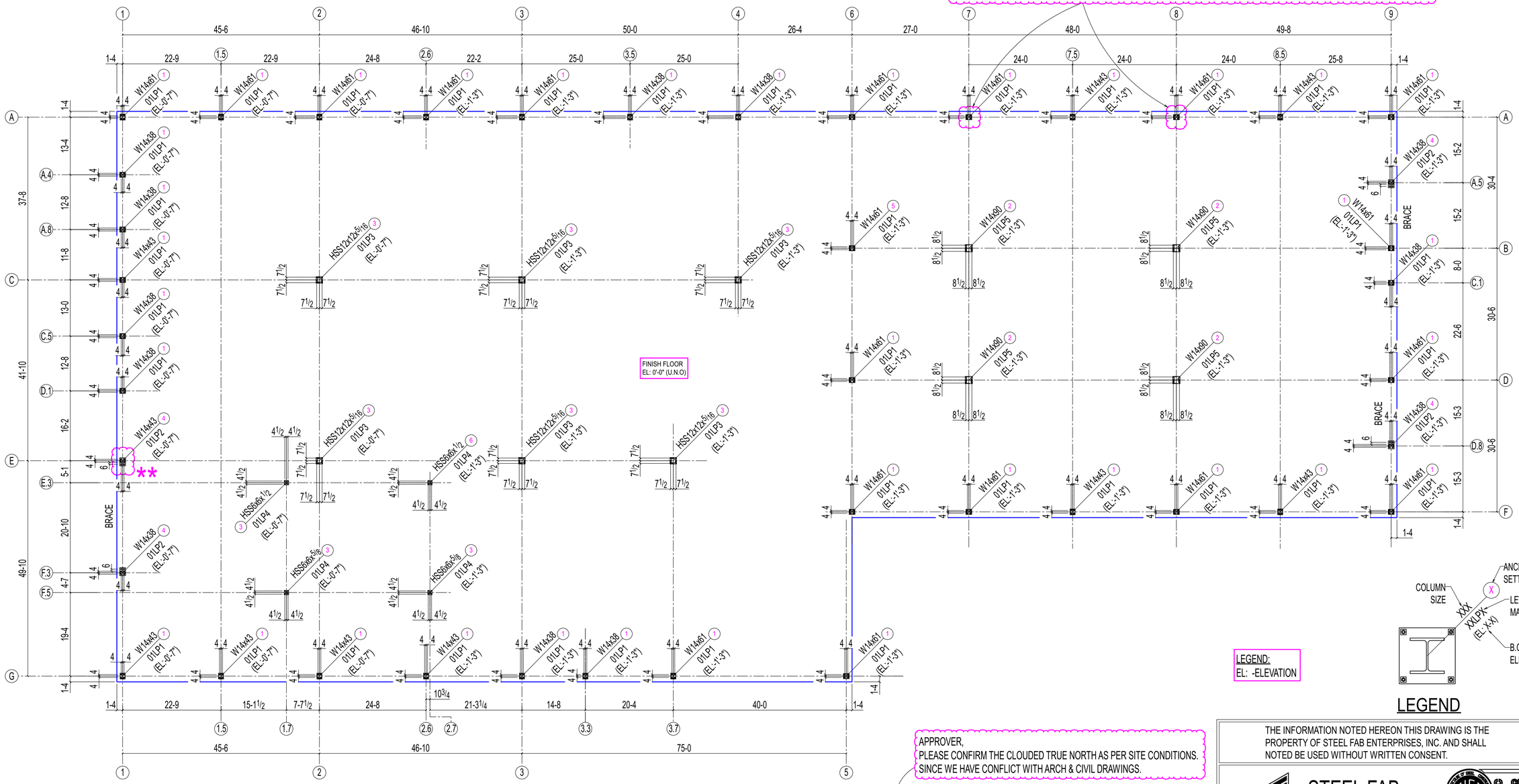

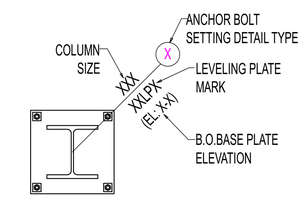

LEGEND

LEGEND:
EL: -ELEVATION

APPROVER,
PLEASE CONFIRM THE CLOUDED TRUE NORTH AS PER SITE CONDITIONS. SINCE WE HAVE CONFLICT WITH ARCH & CIVIL DRAWINGS.

TRUE NORTH PROJECT NORTH

1 / AB01

ANCHOR BOLT SETTING PLAN

(REF: 1/S101,2/S101)

NOTES:
1.ELEVATIONS SHOWN IN (+/-) ARE TO THE BOTTOM OF BASE PLATE /TOP OF LEVELING PLATE AND ARE REFERENCED FROM FINISHED FLOOR ELEVATION (EL:0'-0") = DATUM EL:100'-0" (U.N.O).
2.REFER SHEET AB02 FOR ANCHOR SETTING TYPES.

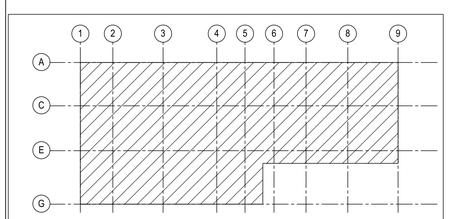

KEY PLAN

** -APPROVER,
WE NEED TO EXTEND OUR BASEPLATE FOR VERTICAL BRACE'S BOTTOM CONNECTION AS SHOWN IN SECTION 9 /201 & 4/AB02 AND DUE TO BASE PLATE EXTENTIONS,CONTRACTOR TO EXTEND THE PIER FOR 1-9 TO SOUTH FROM GRID 'E' IN LIEU OF EXTENTING 1-9" TO NORTH FROM GRID 'E' AS GRAPHICALLY SHOWN IN STRUCTURAL FOUNDATION PLAN S101.

PLEASE CONFIRM & COORDINATE WITH OTHER TRADES.

REVISIONS

REV#	DWN BY	DESCRIPTION	DATE
A	GSV	ISSUED FOR APPROVAL	May 27 2025

THE INFORMATION NOTED HEREON THIS DRAWING IS THE PROPERTY OF STEEL FAB ENTERPRISES, INC. AND SHALL NOT BE USED WITHOUT WRITTEN CONSENT.

STEEL FAB
ENTERPRISES, LLC
MISCELLANEOUS METALS FABRICATOR AND ERECTORS
623 BAUMGARDNER ROAD, LANCASTER, PA 17603
TEL. (717)464-0330 FAX (717)464-9464
WWW.STEELFABENTERPRISES.COM

AISC CERTIFIED FABRICATOR AND ERECTOR

PROJECT OWNER : CK CAPITAL, LLC
PROJECT DESCRIPTION : CLEVELAND BROTHERS-MILESBURG
PROJECT ADDRESS : 1025N. EAGLE VALLEY ROAD, HOWARD, PA 16841
CONTRACTOR : KINSLEY CONSTRUCTION, INC.

DRAWN BY : BAS	DATE : 5-20-25	PROJ. NO. : 25012	REV # A
CHECKED BY : SRP	DATE : 5-20-25	DWG NO. : AB01	
DWG DESCRIPTION : ANCHOR BOLT SETTING PLAN			

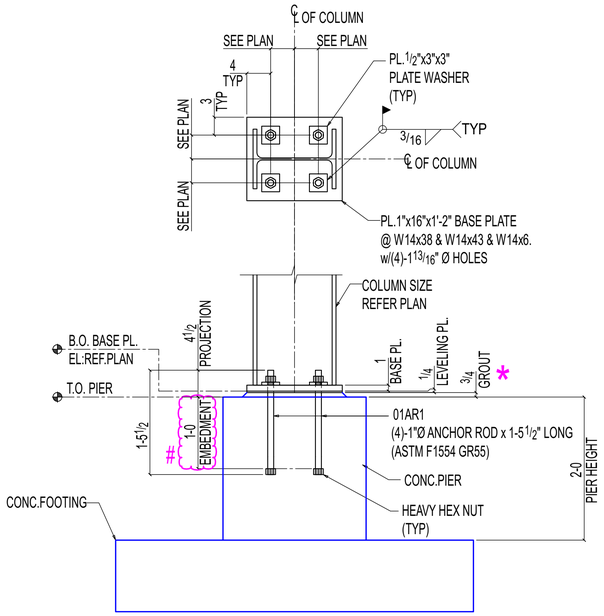

1 AB02 ANCHOR BOLT SETTING TYPE-1

(REF: 1/S301,3/S301)

36 LOCATIONS

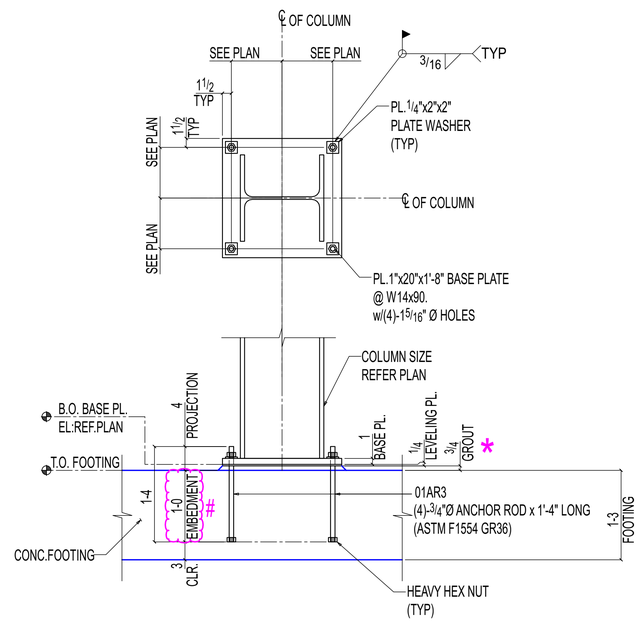

2 AB02 ANCHOR BOLT SETTING TYPE-2

(REF: 1/S301,4/S301)

4 LOCATIONS

LEGEND:
EL: -ELEVATION
T.O. -TOP OF
B.O. -BOTTOM OF

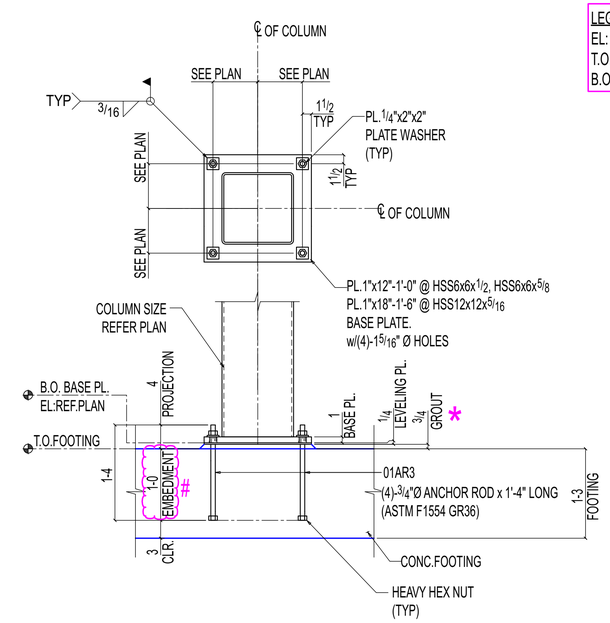

3 AB02 ANCHOR BOLT SETTING TYPE-3

(REF: 2/S301,5/S301)

9 LOCATIONS

-APPROVER,
PLEASE CONFIRM ALL CLOUDED EMBEDMENT LENGTH ARE OK TO PROCEED.

* -GROUT NOTE:
USE NONMETTALLIC, SHRINKAGE-RESISTANT GROUT CONFORMING TO ASTM C1107.

APPROVER,
PLEASE REVIEW ALL SETTING TYPES AND CONFIRM THAT WE HAVE PROVIDE BASE PLATE HOLES PER AISC 14TH EDITION TABLE 14-2.

APPROVER,
PLEASE CONFIRM THE CLOUDED NUMBER OF ANCHOR RODS. SECTION 5A/S301 GRAPHICALLY SHOWS 6 ANCHOR RODS, WHILE THE COLUMN SCHEDULE INDICATES ONLY 4 ANCHOR RODS FOR THE SAME. WE ARE PROCEEDING WITH 6 ANCHOR RODS AS PER SECTION 5A/S301.

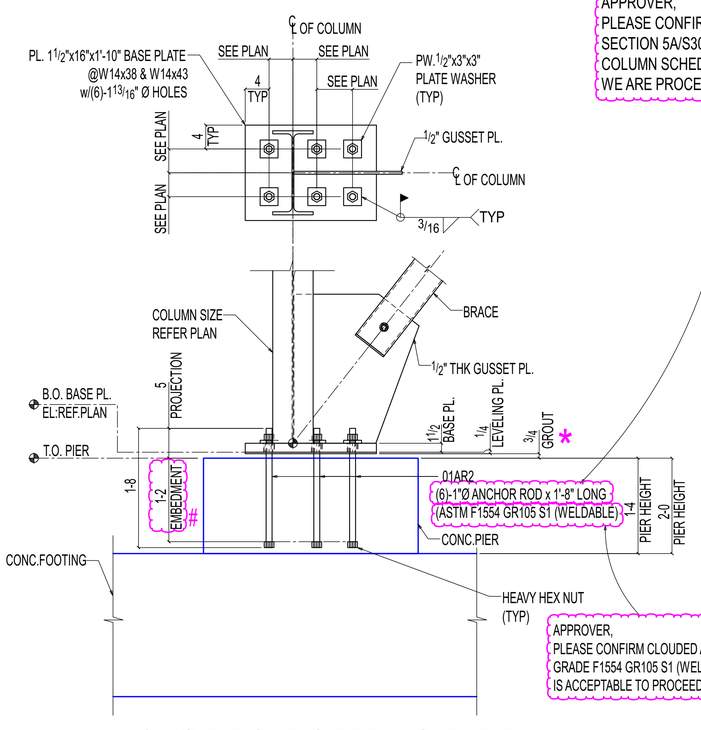

APPROVER,
PLEASE CONFIRM CLOUDED ANCHOR ROD GRADE F1554 GR105 S1 (WELDABLE) IS ACCEPTABLE TO PROCEED

4 AB02 ANCHOR BOLT SETTING TYPE-4

(REF:S101,9/S201,5A/S301)

4 LOCATIONS

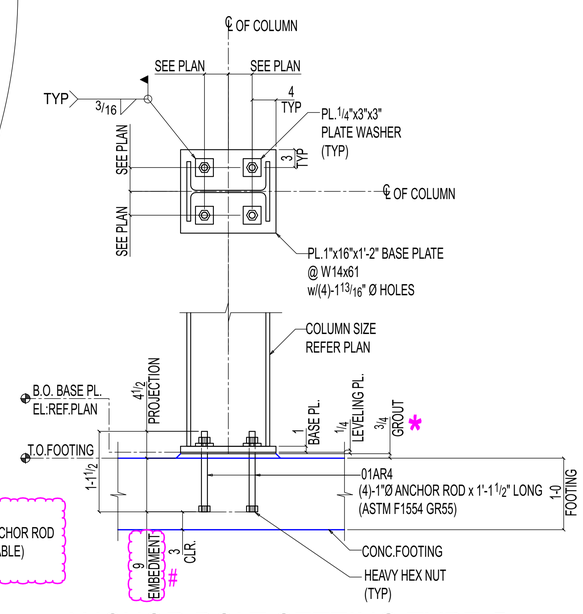

5 AB02 ANCHOR BOLT SETTING TYPE-5

(REF: 1/S301)

ONE LOCATION

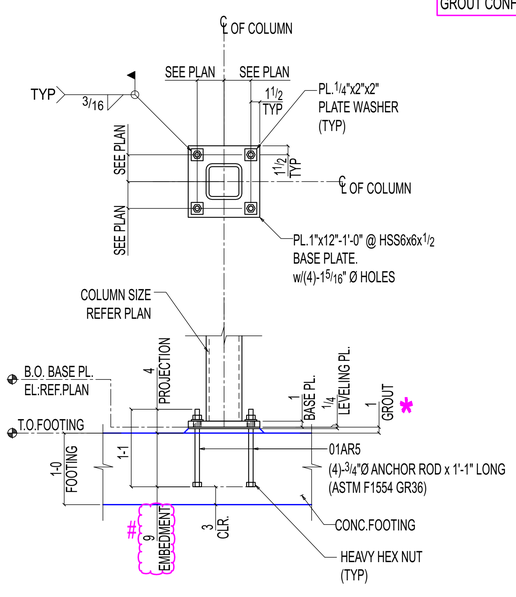

6 AB02 ANCHOR BOLT SETTING TYPE-6

(REF: 2/S301,5/S301)

ONE LOCATIONS

REVISIONS

REV#	DWN BY	DESCRIPTION	DATE
A	GSV	ISSUED FOR APPROVAL	May 27 2025

THE INFORMATION NOTED HEREON THIS DRAWING IS THE PROPERTY OF STEEL FAB ENTERPRISES, INC. AND SHALL NOTED BE USED WITHOUT WRITTEN CONSENT.

STEEL FAB ENTERPRISES, LLC
AISC CERTIFIED FABRICATOR AND ERECTOR
MISCELLANEOUS METALS FABRICATOR AND ERECTORS
623 BAUMGARDNER ROAD, LANCASTER, PA 17603
TEL. (717)464-0330 FAX (717)464-9464
WWW.STEELFABENTERPRISES.COM

PROJECT OWNER : CK CAPITAL, LLC

PROJECT DESCRIPTION : CLEVELAND BROTHERS-MILESBURG

PROJECT ADDRESS : 1025N. EAGLE VALLEY ROAD, HOWARD, PA 16841

CONTRACTOR : KINSLEY CONSTRUCTION, INC.

DRAWN BY : BAS	DATE : 05-20-25	PROJ. NO. :	25012	REV # A
CHECKED BY : SRP	DATE : 05-20-25	DWG NO. :	AB02	

DWG DESCRIPTION : ANCHOR BOLT SETTING TYPES

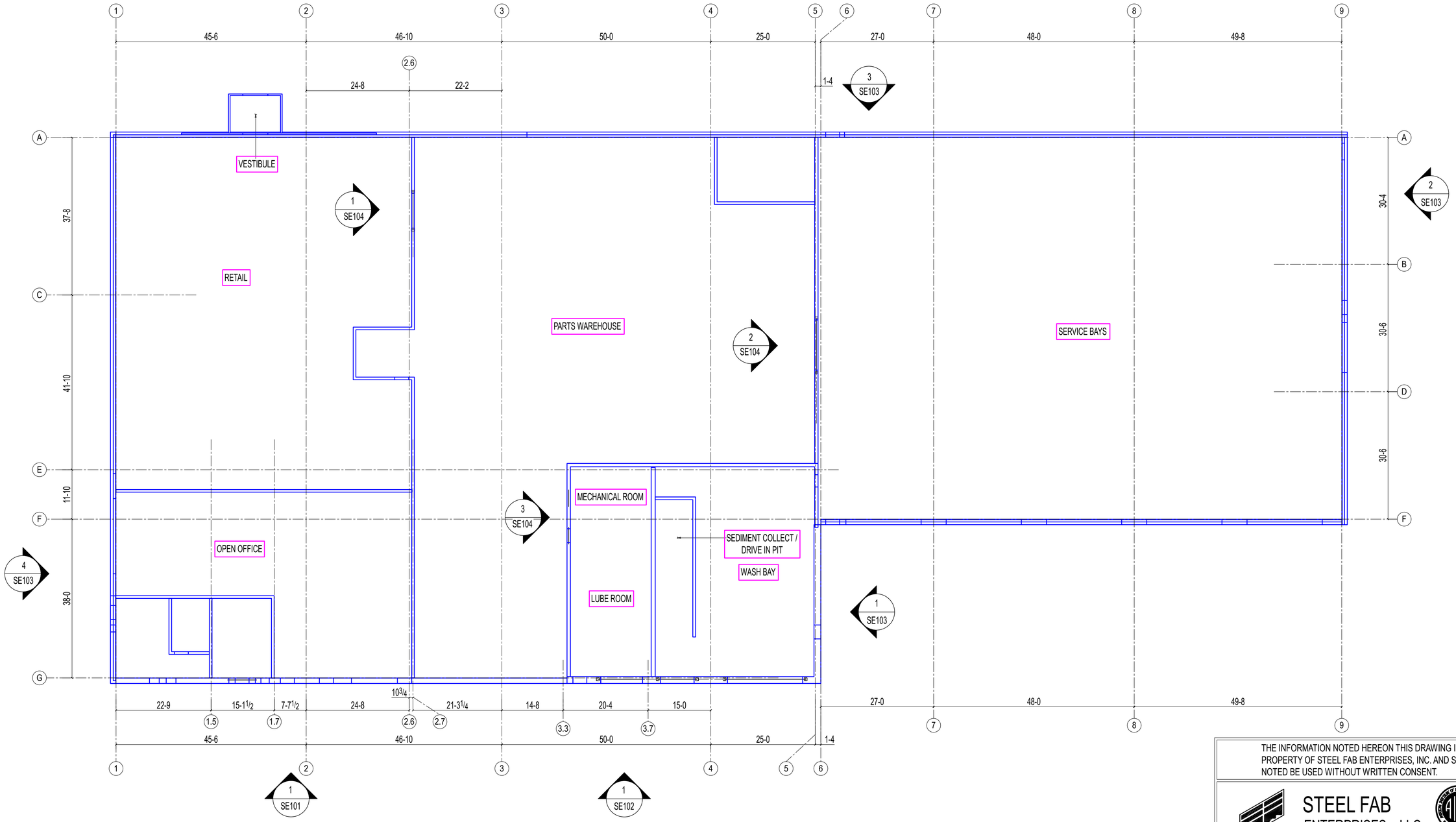

1 E101 MASONRY LINTEL FRAMING PLAN -FIRST FLOOR

(REF: 1/S105)

NOTES:
1. REFERENCED FROM FINISHED FLOOR.EL:[0'-0"] = DATUM EL:100'-0" (U.N.O)
2. REFER ELEVATION VIEWS FOR LOCATIONS AND OPENING DIMENSIONS.

TRUE NORTH PROJECT NORTH

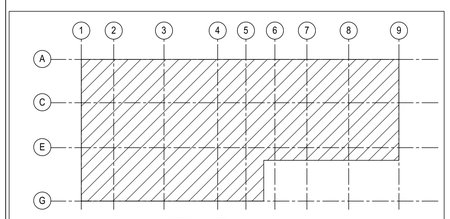

KEY PLAN

APPROVER,
PLEASE CONFIRM THE PAINT AND FINISH FOR ALL INTERIOR LINTELS.
STRUCTURAL AND ARCHITECTURAL DRAWINGS STATE THAT
ALL EXTERIOR LINTELS ARE TO BE GALVANIZED AND PAINTED TO MATCH PNT-08.
HOWEVER, THERE IS NO NOTE REGARDING INTERIOR LINTELS.
WE ASSUME THAT ALL LINTELS (EXTERIOR AND INTERIOR) ARE TO BE GALVANIZED AND
PAINTED TO MATCH PNT-08, WITH SSPC-SP2 SURFACE PREPARATION.
PLEASE CONFIRM OUR ASSUMPTION OR ADVISE OTHERWISE.

LEGEND
BRG. - BEARING
B.O. - BOTTOM OF.
EL. - ELEVATION

REVISIONS

REV#	DWN BY	DESCRIPTION	DATE
A	GSV	ISSUED FOR APPROVAL	May 27 2025

THE INFORMATION NOTED HEREON THIS DRAWING IS THE PROPERTY OF STEEL FAB ENTERPRISES, INC. AND SHALL NOTED BE USED WITHOUT WRITTEN CONSENT.

STEEL FAB ENTERPRISES, LLC
AISC CERTIFIED FABRICATOR AND ERECTOR
MISCELLANEOUS METALS FABRICATOR AND ERECTORS
623 BAUMGARDNER ROAD, LANCASTER, PA 17603
TEL. (717)464-0330 FAX (717)464-9464
WWW.STEELFABENTERPRISES.COM

PROJECT OWNER : CK CAPITAL, LLC
PROJECT DESCRIPTION : CLEVELAND BROTHERS-MILESBURG
PROJECT ADDRESS : 1025N. EAGLE VALLEY ROAD, HOWARD, PA 16841
CONTRACTOR : KINSLEY CONSTRUCTION, INC.

DRAWN BY : BAS	DATE : 5-20-25	PROJ. NO. :	25012	REV # A
CHECKED BY : SRP	DATE : 5-20-25	DWG NO. :	E101	

DWG DESCRIPTION : MASONRY LINTEL FRAMING PLAN -FIRST FLOOR

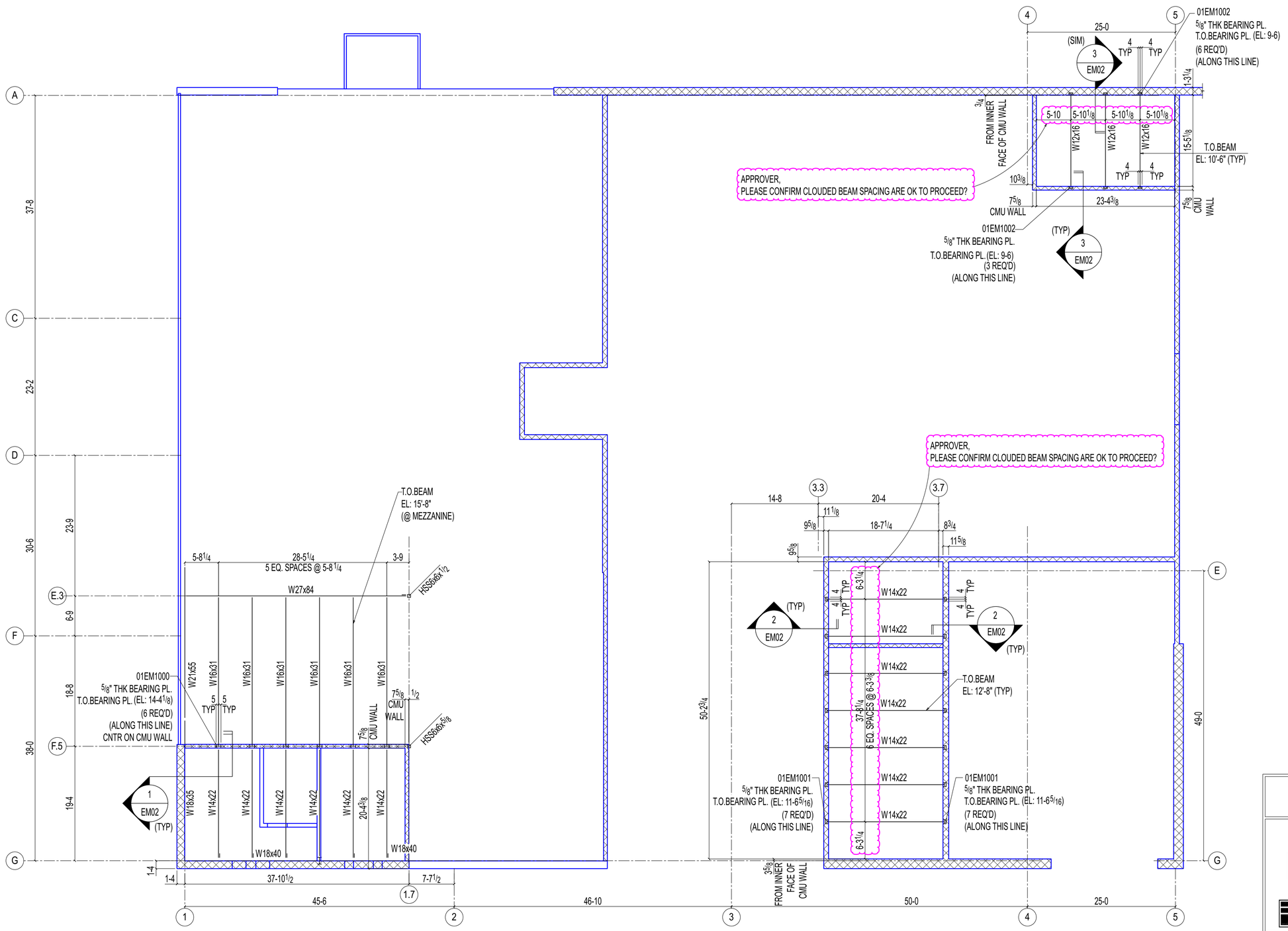

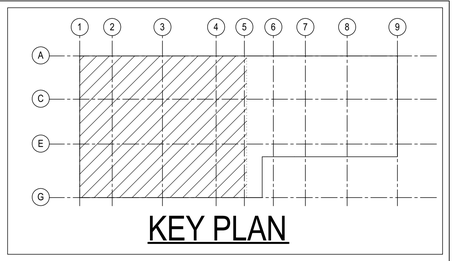

LEGEND:
T.O. - TOP OF
B.O - BOTTOM OF
EL: - ELEVATION
CNTR. - CENTER

1 EM01

BEARING PLATE FRAMING PLAN

(REF: 1/S102,1/S303)

1. THE ELEVATION NOTED ON THE PLAN IS FOR TOP OF BEARING PLATE / BOTTOM OF BEAM ELEVATION AND ARE REFERENCED FROM THE FINISHED FLOOR EL: [0'-0"] = DATUM EL: 100'-0" (U.N.O).
2. REFER SHEET EM02 FOR SECTIONS.

TRUE NORTH

PROJECT NORTH

REVISIONS

REV#	DWN BY	DESCRIPTION	DATE
A	GSV	ISSUED FOR APPROVAL	May 27 2025

THE INFORMATION NOTED HEREON THIS DRAWING IS THE PROPERTY OF STEEL FAB ENTERPRISES, INC. AND SHALL NOTED BE USED WITHOUT WRITTEN CONSENT.

STEEL FAB
ENTERPRISES, LLC
AISC CERTIFIED FABRICATOR AND ERECTOR
MISCELLANEOUS METALS FABRICATOR AND ERECTORS
623 BAUMGARDNER ROAD, LANCASTER, PA 17603
TEL. (717)464-0330 FAX (717)464-9464
WWW.STEELFABENTERPRISES.COM

PROJECT OWNER : CK CAPITAL, LLC

PROJECT DESCRIPTION : CLEVELAND BROTHERS-MILESBURG

PROJECT ADDRESS : 1025N. EAGLE VALLEY ROAD, HOWARD, PA 16841

CONTRACTOR : KINSLEY CONSTRUCTION, INC.

DRAWN BY : BAS	DATE : 5-20-25	PROJ. NO. :	25012	REV # A
CHECKED BY : SRP	DATE : 5-20-25	DWG NO. :	EM01	

DWG DESCRIPTION : BEARING PLATE FRAMING PLAN

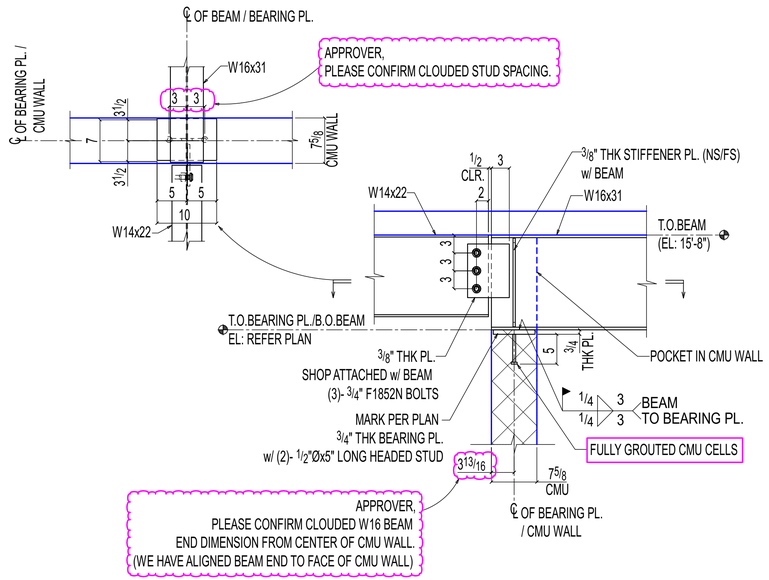

1 EM02 **SECTION**

(REF: 1/S303,3/S501)

OTHERS NOT SHOWN FOR CLARITY

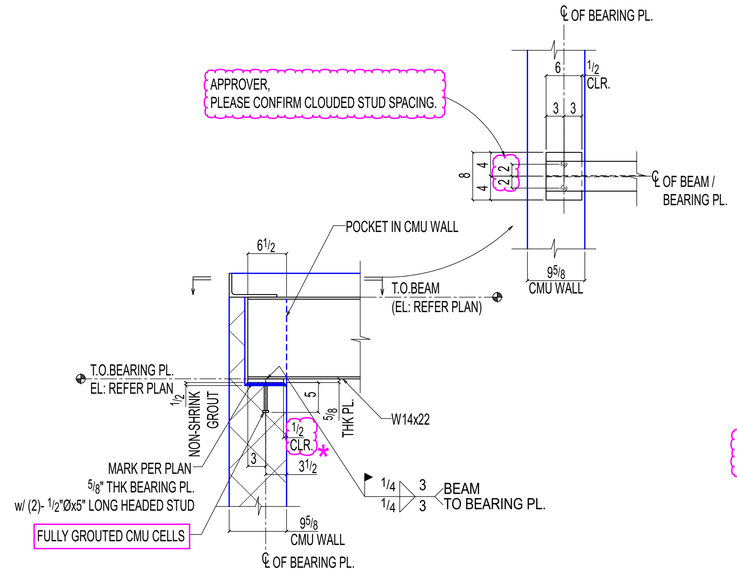

2 EM02 **SECTION**

(REF: 1/S303)

OTHERS NOT SHOWN FOR CLARITY

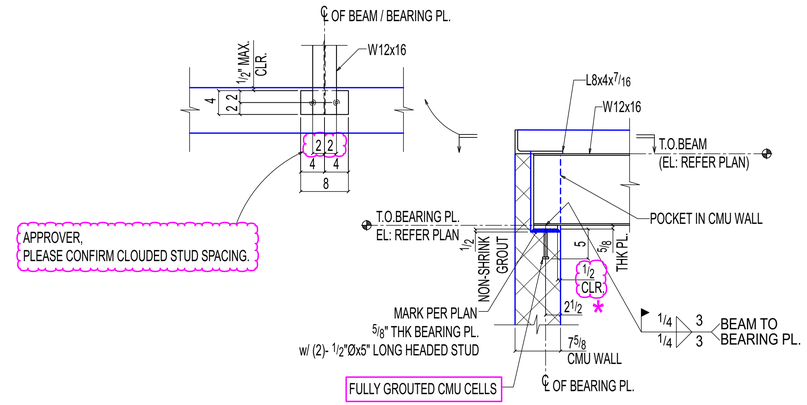

3 EM02 **SECTION**

(REF: 1/S303)

OTHERS NOT SHOWN FOR CLARITY

NOTE:
INFILL BEAM POCKET WITH MASONRY
AFTER BEAM INSTALATIONS IS COMPLETE.

* -APPROVER,
PLEASE CONFIRM CLOUDED BEARING PLATE
LOCATION FROM INNER FACE OF WALL.

REVISIONS

REV#	DWN BY	DESCRIPTION	DATE
A	GSV	ISSUED FOR APPROVAL	May 27 2025

THE INFORMATION NOTED HEREON THIS DRAWING IS THE PROPERTY OF STEEL FAB ENTERPRISES, INC. AND SHALL NOTED BE USED WITHOUT WRITTEN CONSENT.

STEEL FAB
ENTERPRISES, LLC
AISC CERTIFIED FABRICATOR AND ERECTOR
MISCELLANEOUS METALS FABRICATOR AND ERECTORS
623 BAUMGARDNER ROAD, LANCASTER, PA 17603
TEL. (717)464-0330 FAX (717)464-9464
WWW.STEELFABENTERPRISES.COM

PROJECT OWNER : CK CAPITAL, LLC

PROJECT DESCRIPTION : CLEVELAND BROTHERS-MILESBURG

PROJECT ADDRESS : 1025N. EAGLE VALLEY ROAD, HOWARD, PA 16841

CONTRACTOR : KINSLEY CONSTRUCTION, INC.

DRAWN BY : BAS	DATE : 5-20-25	PROJ. NO. : 25012	REV # A
CHECKED BY : SRP	DATE : 5-20-25	DWG NO. : EM02	

DWG DESCRIPTION : SECTIONS

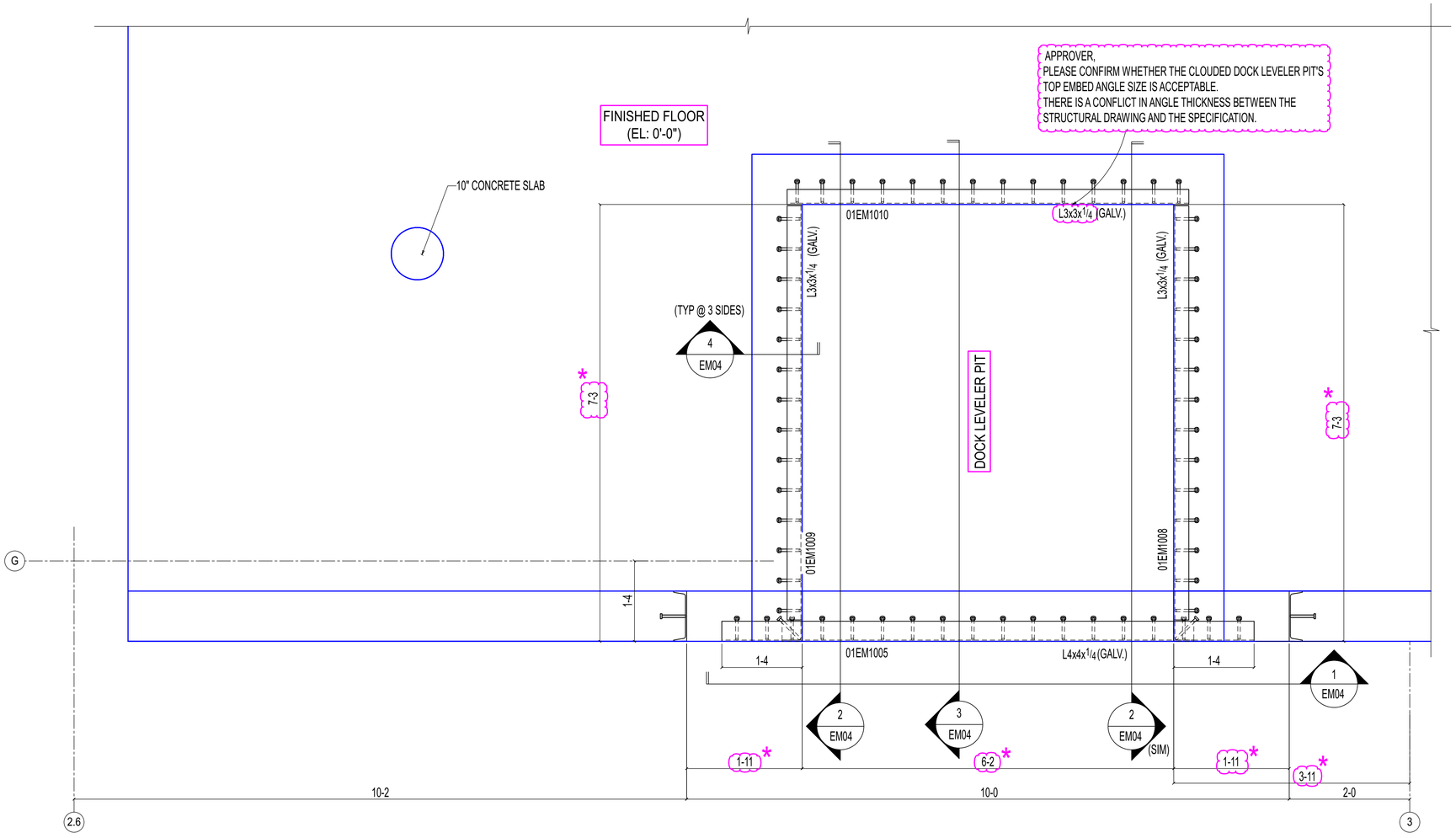

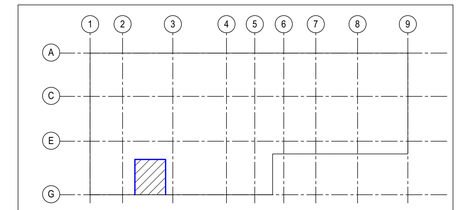

KEY PLAN

* -APPROVER,
PLEASE CONFIRM CLOUDED DOCK LEVELER PIT SIZE AND LOCATION ARE OK TO PROCEED ?

1 / EM03 DOCK LEVELER PIT FRAMING PLAN

(REF: 1/S101,1/A101)

1. REFERENCED FROM THE FINISHED FLOOR EL: [0'-0"] = DATUM EL: 100'-0" (U.N.O).

TRUE NORTH PROJECT NORTH

REVISIONS

REV#	DWN BY	DESCRIPTION	DATE
A	GSV	ISSUED FOR APPROVAL	May 27 2025

THE INFORMATION NOTED HEREON THIS DRAWING IS THE PROPERTY OF STEEL FAB ENTERPRISES, INC. AND SHALL NOTED BE USED WITHOUT WRITTEN CONSENT.

STEEL FAB
ENTERPRISES, LLC
AISC CERTIFIED FABRICATOR AND ERECTOR
MISCELLANEOUS METALS FABRICATOR AND ERECTORS
623 BAUMGARDNER ROAD, LANCASTER, PA 17603
TEL. (717)464-0330 FAX (717)464-9464
WWW.STEELFABENTERPRISES.COM

PROJECT OWNER : CK CAPITAL, LLC
PROJECT DESCRIPTION : CLEVELAND BROTHERS-MILESBURG
PROJECT ADDRESS : 1025N. EAGLE VALLEY ROAD, HOWARD, PA 16841
CONTRACTOR : KINSLEY CONSTRUCTION, INC.

DRAWN BY : BAS	DATE : 5-20-25	PROJ. NO. : 25012	REV # A
CHECKED BY : SRP	DATE : 5-20-25	DWG NO. : EM03	

DWG DESCRIPTION : DOCK LEVELER PIT PLAN

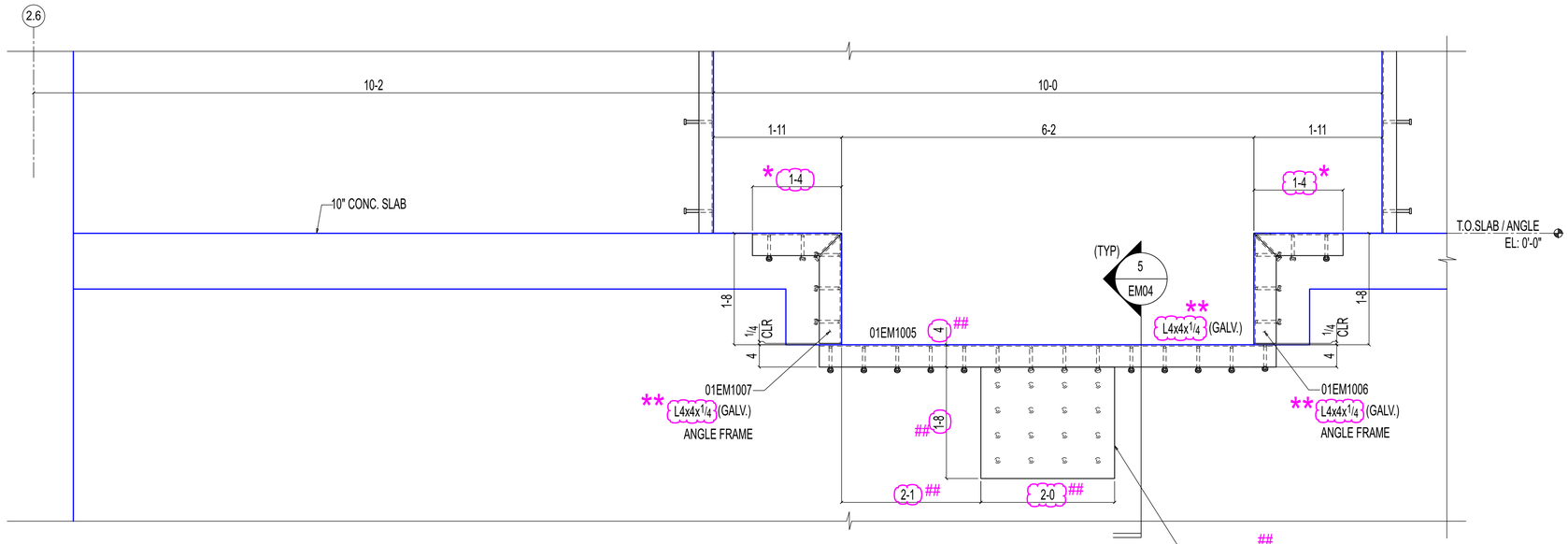

1 EM04 SECTION

OTHERS NOT SHOWN FOR CLARITY

01EM1004
1/2" THK RESTRAINT MOUNTING PLATE (GALV.)
w/ (16)-1/2"Øx6" LONG HEADED STUD

* -APPROVER,
PLEASE CONFIRM CLOUDED ANGLE EXTENSION ?

** -APPROVER,
PLEASE CONFIRM CLOUDED EMBED ANGLE SECTION SIZE AT FRONT OF DOCK LEVELER ARE OK TO PROCEED ?

-APPROVER,
PLEASE CONFIRM WHETHER THE LEVELER HAS A TRAIL HOOK OR NOT. IF IT DOES, THEN PLEASE CONFIRM THE CLOUDED EMBED PLATE SIZE, LOCATION, STUD COUNT, AND DETAILS.

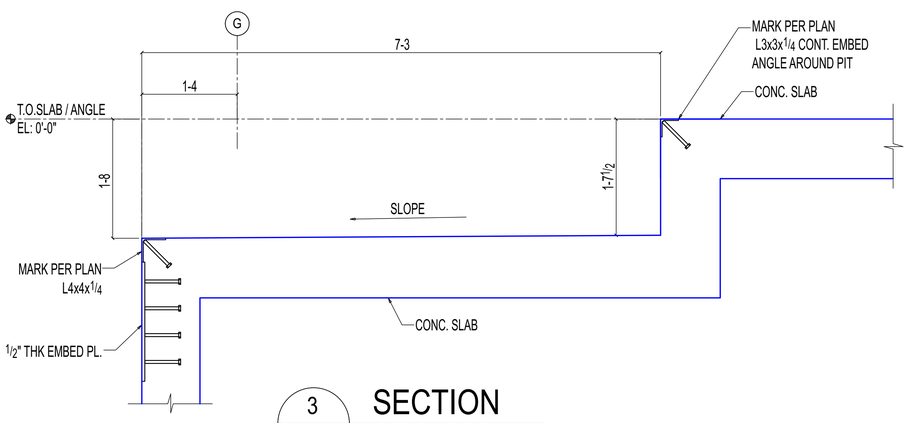

3 EM04 SECTION

(REF:13/S400 & 9/A182)

OTHERS NOT SHOWN FOR CLARITY

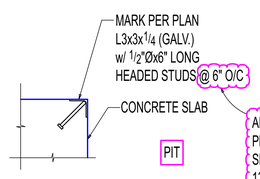

4 EM04 SECTION

APPROVER,
PLEASE CONFIRM CLOUDED STUD SPACING, THE SECTION 13/S400 SHOWS 6" SPACING AND 13A/S400 SHOWS 9" O/C SPACING FOR THE SAME. PLEASE ADVISE.

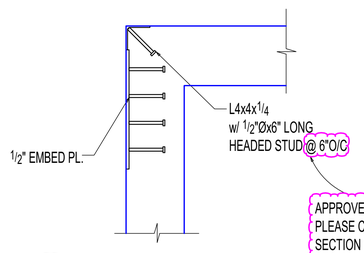

5 EM04 SECTION

APPROVER,
PLEASE CONFIRM CLOUDED STUD SPACING, SECTION 13/S400 SHOWS 8" O.C AND 9/A182 SHOWS 6" O/C FOR THE SAME. PLEASE ADVISE.

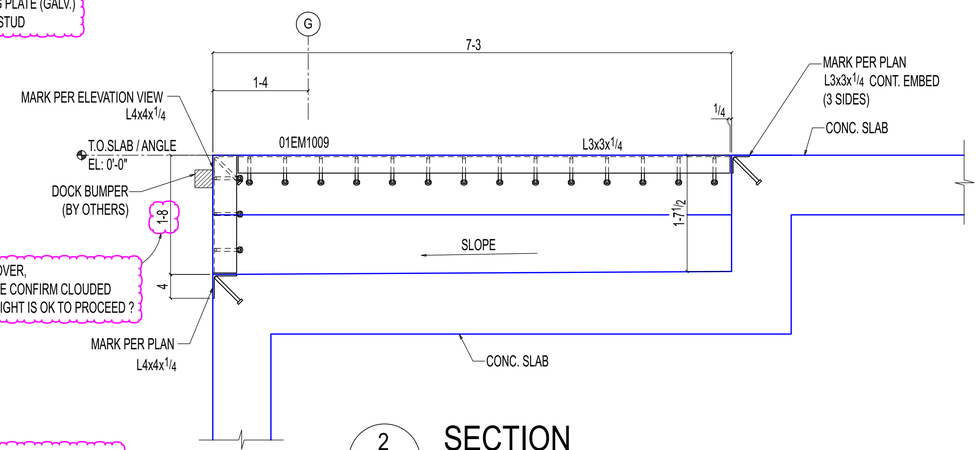

APPROVER,
PLEASE CONFIRM CLOUDED PIT HEIGHT IS OK TO PROCEED ?

2 EM04 SECTION

(REF:9/A182 & 13/S400)

OTHERS NOT SHOWN FOR CLARITY

REVISIONS

REV#	DWN BY	DESCRIPTION	DATE
A	GSV	ISSUED FOR APPROVAL	May 27 2025

THE INFORMATION NOTED HEREON THIS DRAWING IS THE PROPERTY OF STEEL FAB ENTERPRISES, INC. AND SHALL NOTED BE USED WITHOUT WRITTEN CONSENT.

STEEL FAB
ENTERPRISES, LLC
AISC CERTIFIED FABRICATOR AND ERECTOR
MISCELLANEOUS METALS FABRICATOR AND ERECTORS
623 BAUMGARDNER ROAD, LANCASTER, PA 17603
TEL. (717)464-0330 FAX (717)464-9464
WWW.STEELFABENTERPRISES.COM

PROJECT OWNER : CK CAPITAL, LLC

PROJECT DESCRIPTION : CLEVELAND BROTHERS-MILESBURG

PROJECT ADDRESS : 1025N. EAGLE VALLEY ROAD, HOWARD, PA 16841

CONTRACTOR : KINSLEY CONSTRUCTION, INC.

DRAWN BY : BAS	DATE : 5-20-25	PROJ. NO. :	25012	REV # A
CHECKED BY : SRP	DATE : 5-20-25	DWG NO. :	EM04	

DWG DESCRIPTION : SECTIONS

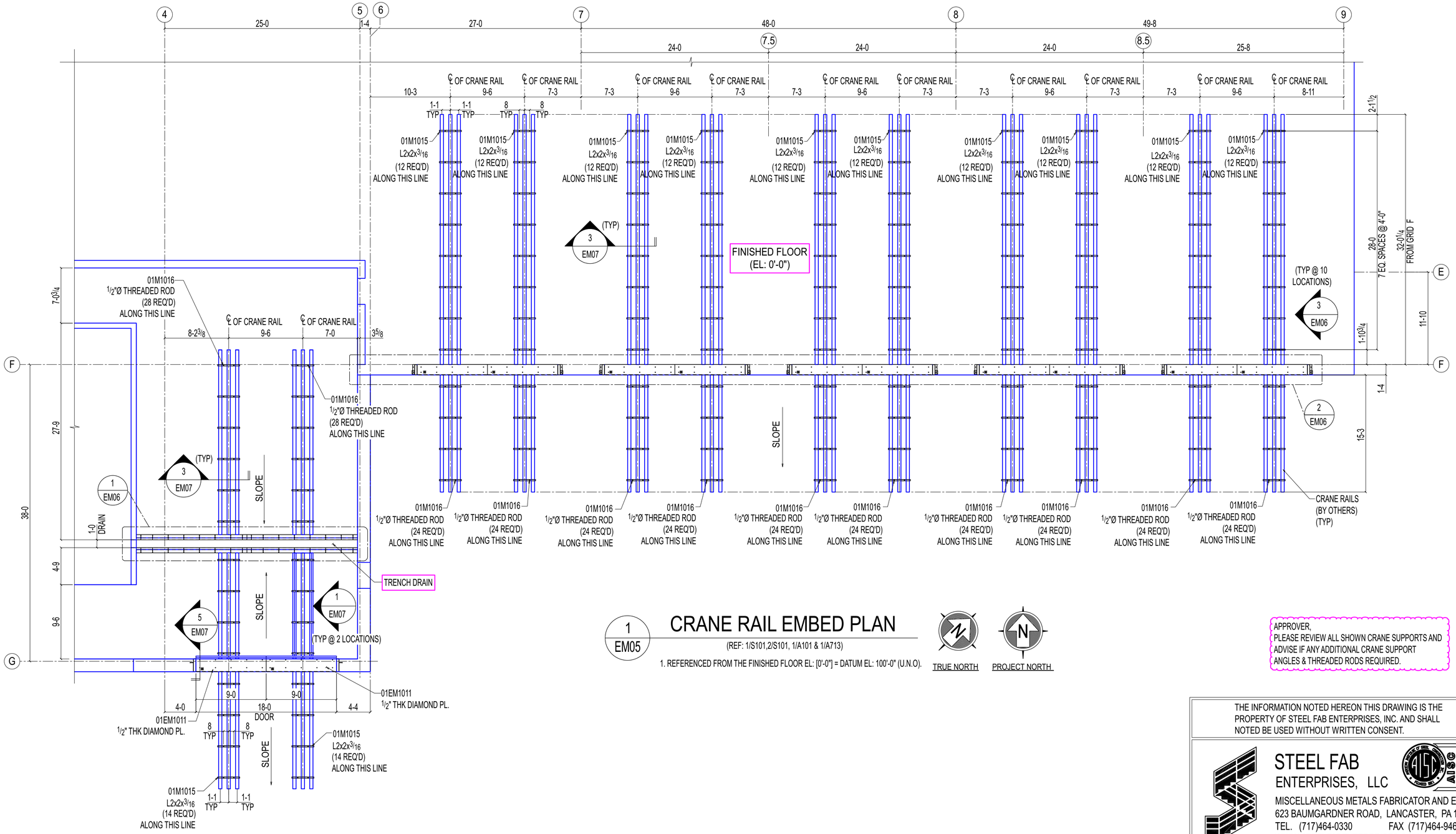

1
EM05

CRANE RAIL EMBED PLAN

(REF: 1/S101,2/S101, 1/A101 & 1/A713)

1. REFERENCED FROM THE FINISHED FLOOR EL: [0'-0"] = DATUM EL: 100'-0" (U.N.O).

TRUE NORTH

PROJECT NORTH

APPROVER,
PLEASE REVIEW ALL SHOWN CRANE SUPPORTS AND ADVISE IF ANY ADDITIONAL CRANE SUPPORT ANGLES & THREADED RODS REQUIRED.

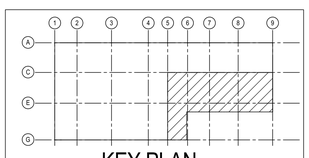

KEY PLAN

REVISIONS

REV#	DWN BY	DESCRIPTION	DATE
A	GSV	ISSUED FOR APPROVAL	May 27 2025

THE INFORMATION NOTED HEREON THIS DRAWING IS THE PROPERTY OF STEEL FAB ENTERPRISES, INC. AND SHALL NOT BE USED WITHOUT WRITTEN CONSENT.

STEEL FAB
ENTERPRISES, LLC
MISCELLANEOUS METALS FABRICATOR AND ERECTORS
623 BAUMGARDNER ROAD, LANCASTER, PA 17603
TEL. (717)464-0330 FAX (717)464-9464
WWW.STEELFABENTERPRISES.COM

AISC CERTIFIED FABRICATOR AND ERECTOR

PROJECT OWNER : CK CAPITAL, LLC

PROJECT DESCRIPTION : CLEVELAND BROTHERS-MILESBURG

PROJECT ADDRESS : 1025N. EAGLE VALLEY ROAD, HOWARD, PA 16841

CONTRACTOR : KINSLEY CONSTRUCTION, INC.

DRAWN BY : BAS	DATE : 5-20-25	PROJ. NO. : 25012	REV # A
CHECKED BY : SRP	DATE : 5-20-25	DWG NO. : EM05	

DWG DESCRIPTION : CRANE RAIL EMBED PLAN

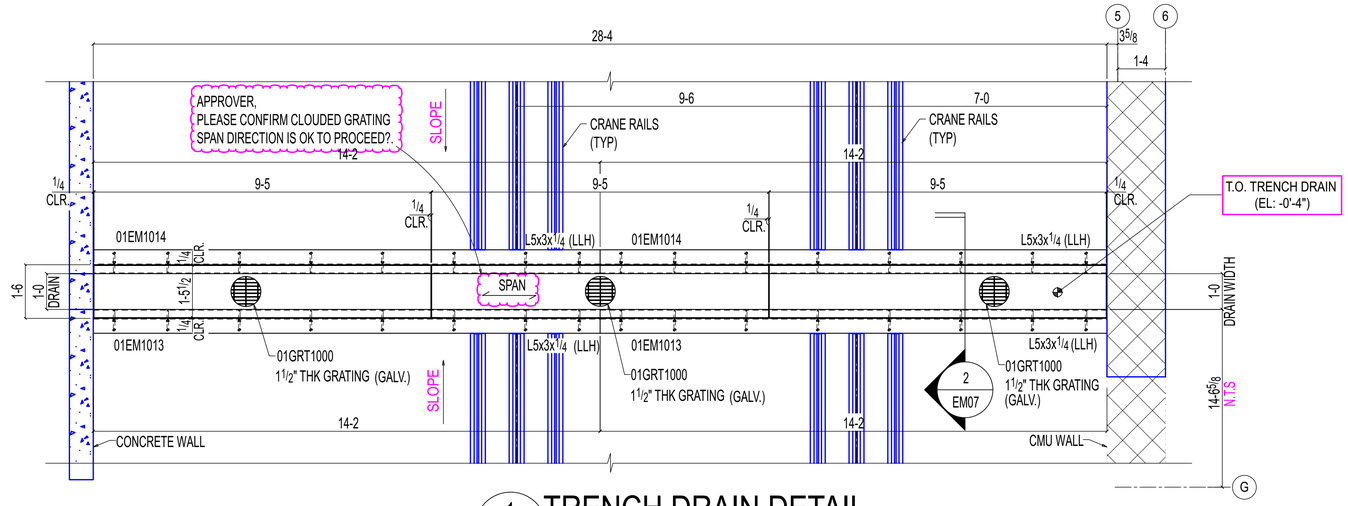

1 EM06 TRENCH DRAIN DETAIL

(REF: 1/S101,2/S101 & 1/A101)

OTHERS NOT SHOWN FOR CLARITY

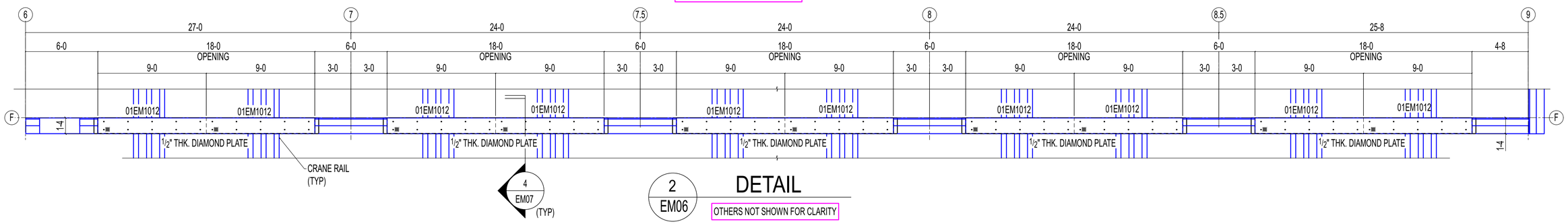

2 EM06 DETAIL

OTHERS NOT SHOWN FOR CLARITY

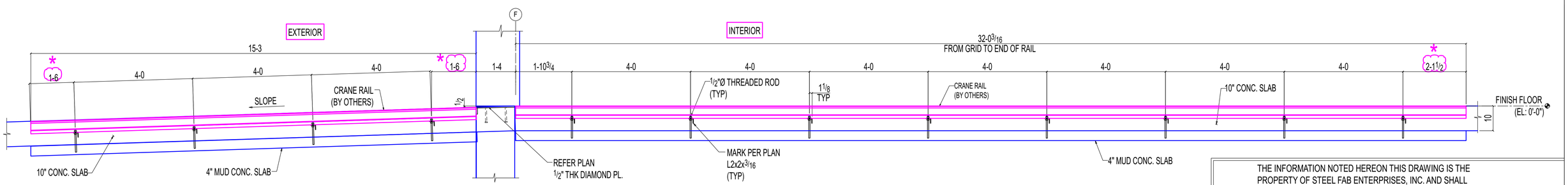

3 EM06 ELEVATION

OTHERS NOT SHOWN FOR CLARITY

NOTE:
1. ALL ANGLES ARE TO BE L2x2x3/16 U.N.O.

* -APPROVER,
PLEASE CONFIRM CLOUDED RAIL SUPPORT
ANGLE LOCATONS ARE OK TO PROCEED?.

THE INFORMATION NOTED HEREON THIS DRAWING IS THE PROPERTY OF STEEL FAB ENTERPRISES, INC. AND SHALL NOTED BE USED WITHOUT WRITTEN CONSENT.

STEEL FAB
ENTERPRISES, LLC
AISC CERTIFIED FABRICATOR AND ERECTOR
MISCELLANEOUS METALS FABRICATOR AND ERECTORS
623 BAUMGARDNER ROAD, LANCASTER, PA 17603
TEL. (717)464-0330 FAX (717)464-9464
WWW.STEELFABENTERPRISES.COM

REVISIONS

REV#	DWN BY	DESCRIPTION	DATE
A	GSV	ISSUED FOR APPROVAL	May 27 2025

PROJECT OWNER : CK CAPITAL, LLC

PROJECT DESCRIPTION : CLEVELAND BROTHERS-MILESBURG

PROJECT ADDRESS : 1025N. EAGLE VALLEY ROAD, HOWARD, PA 16841

CONTRACTOR : KINSLEY CONSTRUCTION, INC.

DRAWN BY : BAS	DATE : 5-20-25	PROJ. NO. : 25012	REV # A
CHECKED BY : SRP	DATE : 5-20-25	DWG NO. : EM06	

DWG DESCRIPTION : DETAIL & ELEVATION

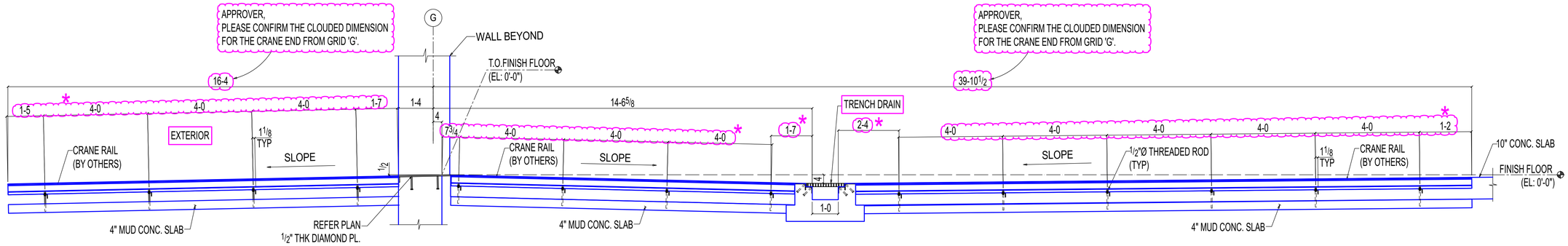

1 EM07 ELEVATION

OTHERS NOT SHOWN FOR CLARITY

APPROVER,
* -PLEASE CONFIRM CLOUDED CRANE RAIL
SUPPORT ANGLE LOCATIONS ARE OK TO PROCEED?.

NOTE:
1. ALL ANGLES ARE TO BE L2x2x3/16 (L.L.H) U.N.O.

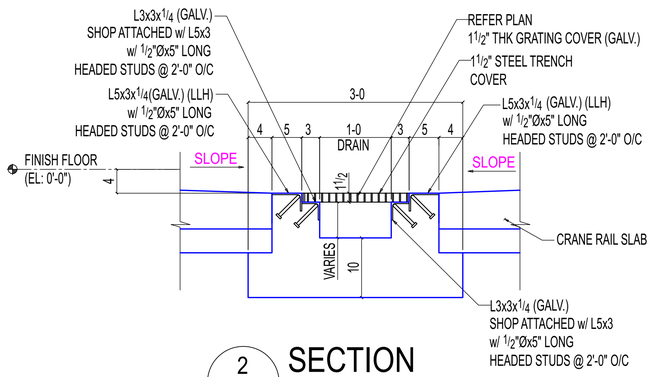

2 EM07 SECTION

(REF: 6/A173) (1/S401)

OTHERS NOT SHOWN FOR CLARITY

APPROVER,
- PLEASE CONFIRM ANGLE EXTENSION
FROM CENTER OF RAIL.

APPROVER,
PLEASE CONFIRM CLOUDED
THREADED ROD LOCATION FROM
CENTER OF CRANE.

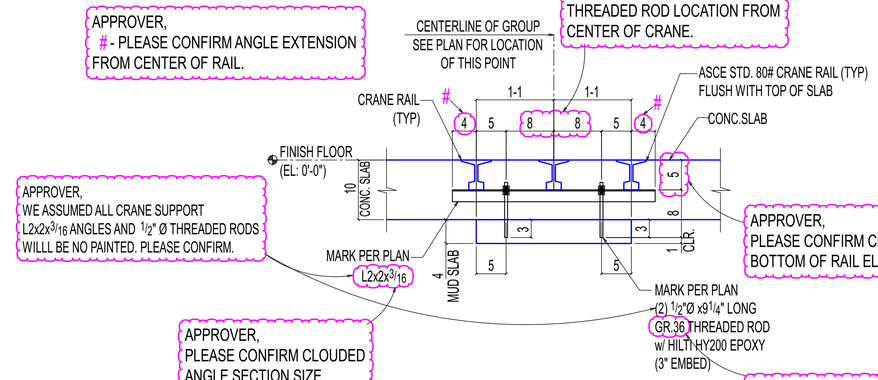

APPROVER,
WE ASSUMED ALL CRANE SUPPORT
L2x2x3/16 ANGLES AND 1/2" Ø THREADED RODS
WILLL BE NO PAINTED. PLEASE CONFIRM.

APPROVER,
PLEASE CONFIRM CLOUDED
BOTTOM OF RAIL ELEVATION.

APPROVER,
PLEASE CONFIRM CLOUDED
ANGLE SECTION SIZE.

APPROVER,
PLEASE CONFIRM CLOUDED THREADED ROD GRADE.

3 EM07 SECTION

(REF:5/S300)

OTHERS NOT SHOWN FOR CLARITY

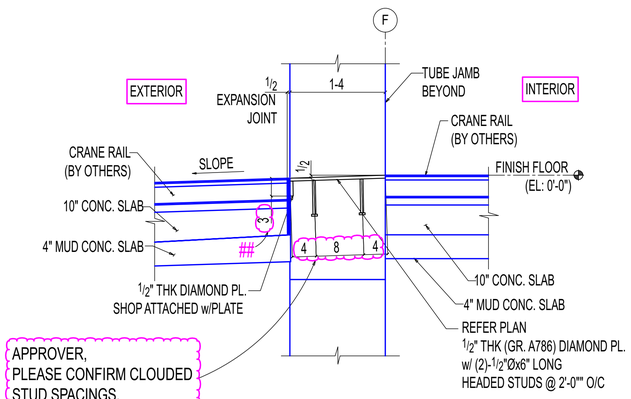

APPROVER,
PLEASE CONFIRM CLOUDED
STUD SPACINGS.

4 EM07 SECTION

(REF: 10/S400 & A518)
S-2 (@CRANE RAIL TRACKS)

OTHERS NOT SHOWN FOR CLARITY

APPROVER,
PLEASE CONFIRM CLOUDED
EMBED PLATE LENGTH IS ACCEPTABLE.

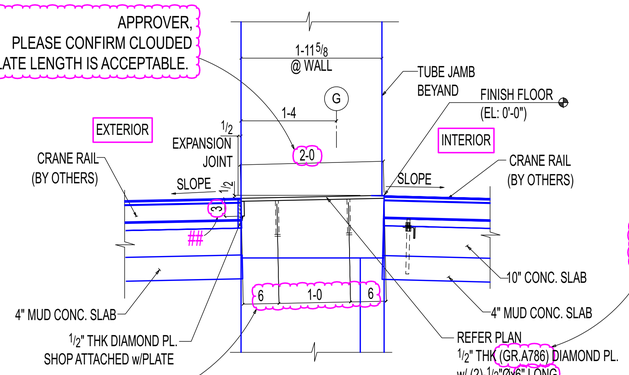

APPROVER,
PLEASE CONFIRM DIAMOND PLATE GRADE IS OK TO PROCEED?

APPROVER,
PLEASE CONFIRM CLOUDED STUD
SPACINGS ARE OK TO PROCEED?

APPROVER,
THE STRUCTURAL DRAWING 10/S400 INDICATES 6" LONG STUD,
WHILE ARCH SHEET S-2/A518 SHOWS 3" FOR THE SAME.
WE INTEND TO FOLLOW THE 6" LENGTH AS PER THE STRUCTURAL DRAWING.
PLEASE CONFIRM IF THIS IS ACCEPTABLE.

5 EM07 SECTION

(REF: 10/S400 & A518)
S-2 (@CRANE RAIL TRACKS)

OTHERS NOT SHOWN FOR CLARITY

APPROVER,
-PLEASE CONFIRM CLOUDED DIAMOND PLATE VERTICAL LEG.

REVISIONS

REV#	DWN BY	DESCRIPTION	DATE
A	GSV	ISSUED FOR APPROVAL	May 27 2025

THE INFORMATION NOTED HEREON THIS DRAWING IS THE
PROPERTY OF STEEL FAB ENTERPRISES, INC. AND SHALL
NOTED BE USED WITHOUT WRITTEN CONSENT.

STEEL FAB
ENTERPRISES, LLC
AISC CERTIFIED FABRICATOR AND ERECTOR
MISCELLANEOUS METALS FABRICATOR AND ERECTORS
623 BAUMGARDNER ROAD, LANCASTER, PA 17603
TEL. (717)464-0330 FAX (717)464-9464
WWW.STEELFABENTERPRISES.COM

PROJECT OWNER : CK CAPITAL, LLC

PROJECT DESCRIPTION : CLEVELAND BROTHERS-MILESBURG

PROJECT ADDRESS : 1025N. EAGLE VALLEY ROAD, HOWARD, PA 16841

CONTRACTOR : KINSLEY CONSTRUCTION, INC.

DRAWN BY : BAS	DATE : 5-20-25	PROJ. NO. :	25012	REV # A
CHECKED BY : SRP	DATE : 5-20-25	DWG NO. :	EM07	

DWG DESCRIPTION : SECTION & ELEVATION

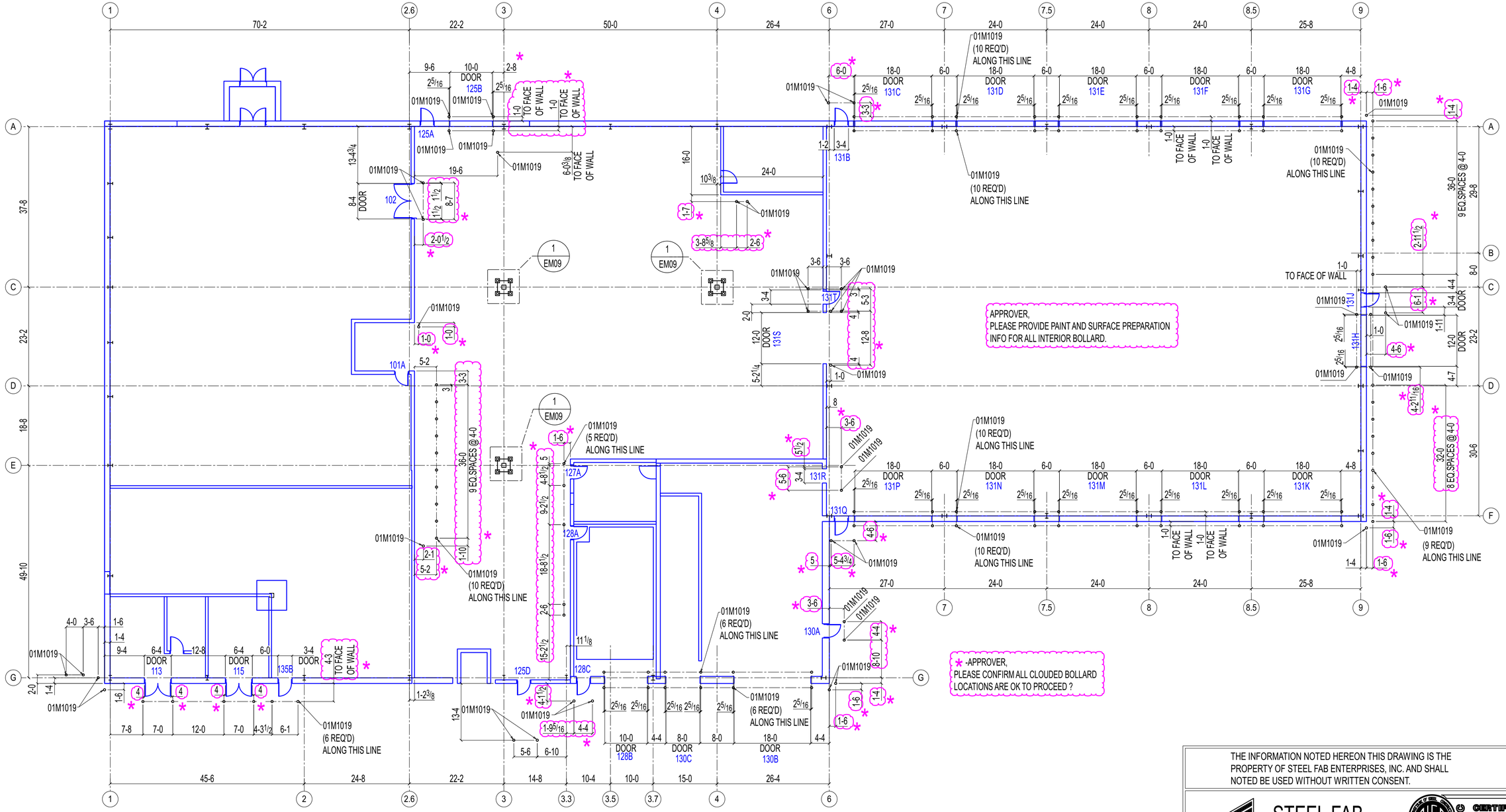

1
EM08

BOLLARD FRAMING PLAN

(REF: 1/A101)

TRUE NORTH PROJECT NORTH

NOTE
1. REFERENCED FROM THE FINISHED FLOOR EL: [0'-0"] = DATUM EL: 100'-0" (U.N.O).
2. ALL BOLLARDS ARE PIPE 6 SCH80 U.N.O.
3. ALL DIMENSIONS ARE CENTER LINE OF BOLLARD. (U.N.O)

APPROVER,
PLEASE CONFIRM THE PAINT & SURFACE
PREPARATION FOR ALL EXTERIOR BOLLARDS.

APPROVER,
PLEASE REVIEW AND CONFIRM ANY ADDITIONAL
BOLLARDS ARE REQUIRED IN ANY OTHER LOCATIONS.

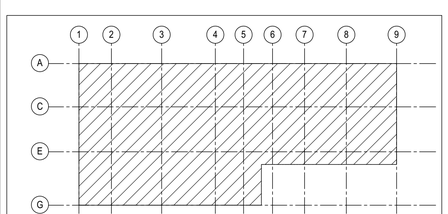

KEY PLAN

REVISIONS

REV#	DWN BY	DESCRIPTION	DATE
A	GSV	ISSUED FOR APPROVAL	May 27 2025

THE INFORMATION NOTED HEREON THIS DRAWING IS THE PROPERTY OF STEEL FAB ENTERPRISES, INC. AND SHALL NOTED BE USED WITHOUT WRITTEN CONSENT.

STEEL FAB
ENTERPRISES, LLC
MISCELLANEOUS METALS FABRICATOR AND ERECTORS
623 BAUMGARDNER ROAD, LANCASTER, PA 17603
TEL. (717)464-0330 FAX (717)464-9464
WWW.STEELFABENTERPRISES.COM

AISC CERTIFIED FABRICATOR AND ERECTOR

PROJECT OWNER : CK CAPITAL, LLC
PROJECT DESCRIPTION : CLEVELAND BROTHERS-MILESBURG
PROJECT ADDRESS : 1025N. EAGLE VALLEY ROAD, HOWARD, PA 16841
CONTRACTOR : KINSLEY CONSTRUCTION, INC.

DRAWN BY : BAS	DATE : 5-20-25	PROJ. NO. :	25012	REV # A
CHECKED BY : SRP	DATE : 5-20-25	DWG NO. :	EM08	

DWG DESCRIPTION : BOLLARD PLAN

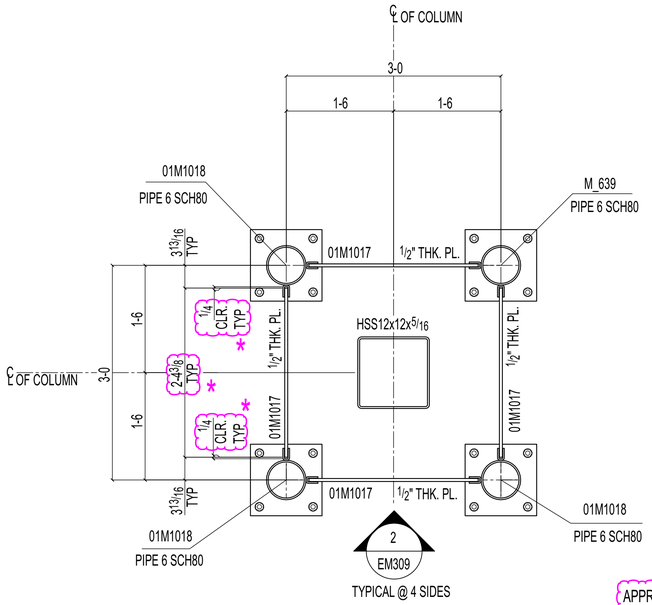

1 EM09 **DETAIL**

(REF: 5/A101)

OTHERS NOT SHOWN FOR CLARITY

APPROVER,
*:PLEASE CONFIRM CLOUDED PLATE SIZE AND CLEAR DIMENSIONS ARE OK TO PROCEED?

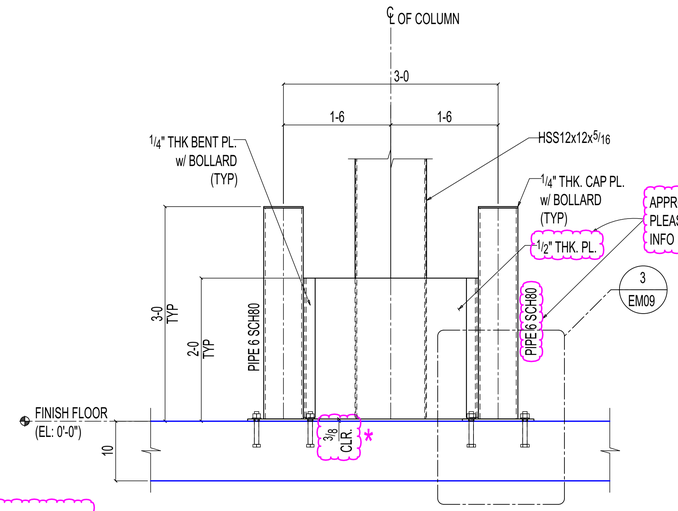

APPROVER,
PLEASE PROVIDE PAINT AND SURFACE PREPARATION INFO FOR COLUMN PROTECTION BOLLARD AND THEIR COVER PLATE.

2 EM09 **ELEVATION VIEW**

(REF: 5/A101)

OTHER NOT SHOWN FOR CLARITY

APPROVER,
PLEASE CONFIRM BENT PL.THICKNESS AND CLOUDED LEG DIMENSION IS ACCEPTABLE.

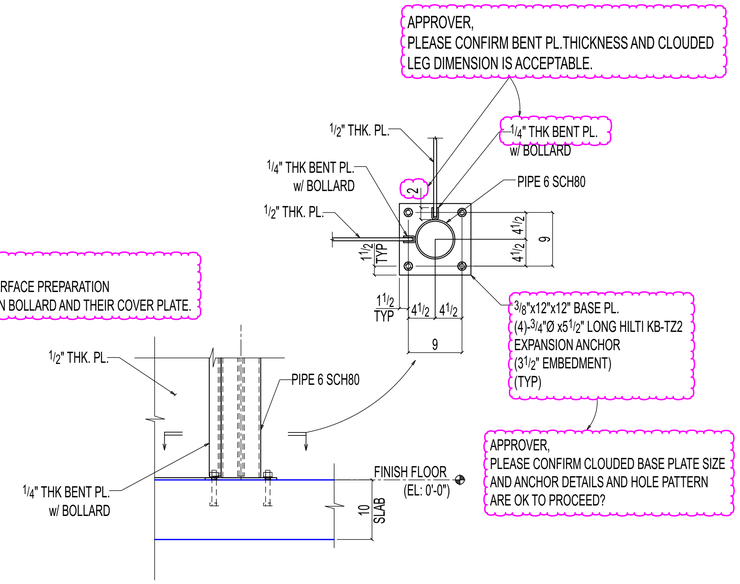

APPROVER,
PLEASE CONFIRM CLOUDED BASE PLATE SIZE AND ANCHOR DETAILS AND HOLE PATTERN ARE OK TO PROCEED?

3 EM09 **DETAIL**

(REF: 5/A101)

OTHERS NOT SHOWN FOR CLARITY

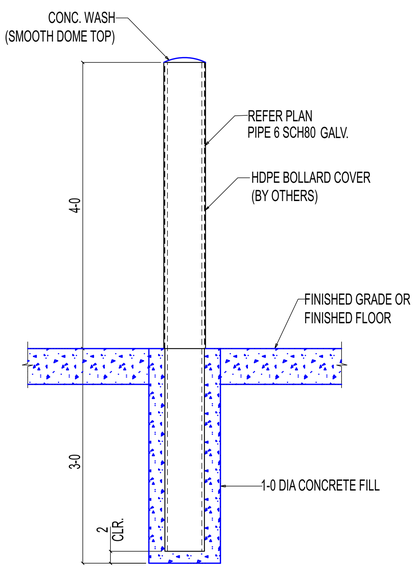

TYPICAL EXTERIOR BOLLARD CONCRETE FILLED PIPE DETAIL

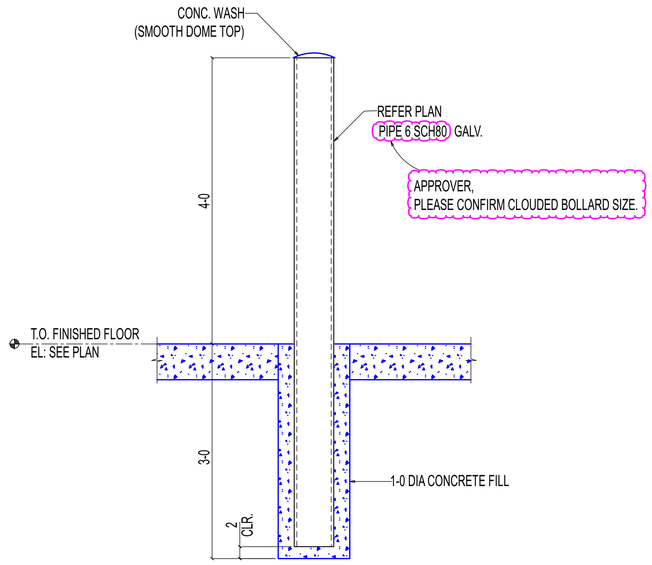

TYPICAL INTERIOR BOLLARD CONCRETE FILLED PIPE DETAIL

REVISIONS

REV#	DWN BY	DESCRIPTION	DATE
A	GSV	ISSUED FOR APPROVAL	May 27 2025

THE INFORMATION NOTED HEREON THIS DRAWING IS THE PROPERTY OF STEEL FAB ENTERPRISES, INC. AND SHALL NOTED BE USED WITHOUT WRITTEN CONSENT.

STEEL FAB
ENTERPRISES, LLC
AISC CERTIFIED FABRICATOR AND ERECTOR
MISCELLANEOUS METALS FABRICATOR AND ERECTORS
623 BAUMGARDNER ROAD, LANCASTER, PA 17603
TEL. (717)464-0330 FAX (717)464-9464
WWW.STEELFABENTERPRISES.COM

PROJECT OWNER : CK CAPITAL, LLC

PROJECT DESCRIPTION : CLEVELAND BROTHERS-MILESBURG

PROJECT ADDRESS : 1025N. EAGLE VALLEY ROAD, HOWARD, PA 16841

CONTRACTOR : KINSLEY CONSTRUCTION, INC.

DRAWN BY : BAS	DATE : 05-20-25	PROJ. NO. : 25012	REV # A
CHECKED BY : SRP	DATE : 05-20-25	DWG NO. : EM09	

DWG DESCRIPTION : DETAILS & ELEVATION VIEW & TYPICAL SECTION

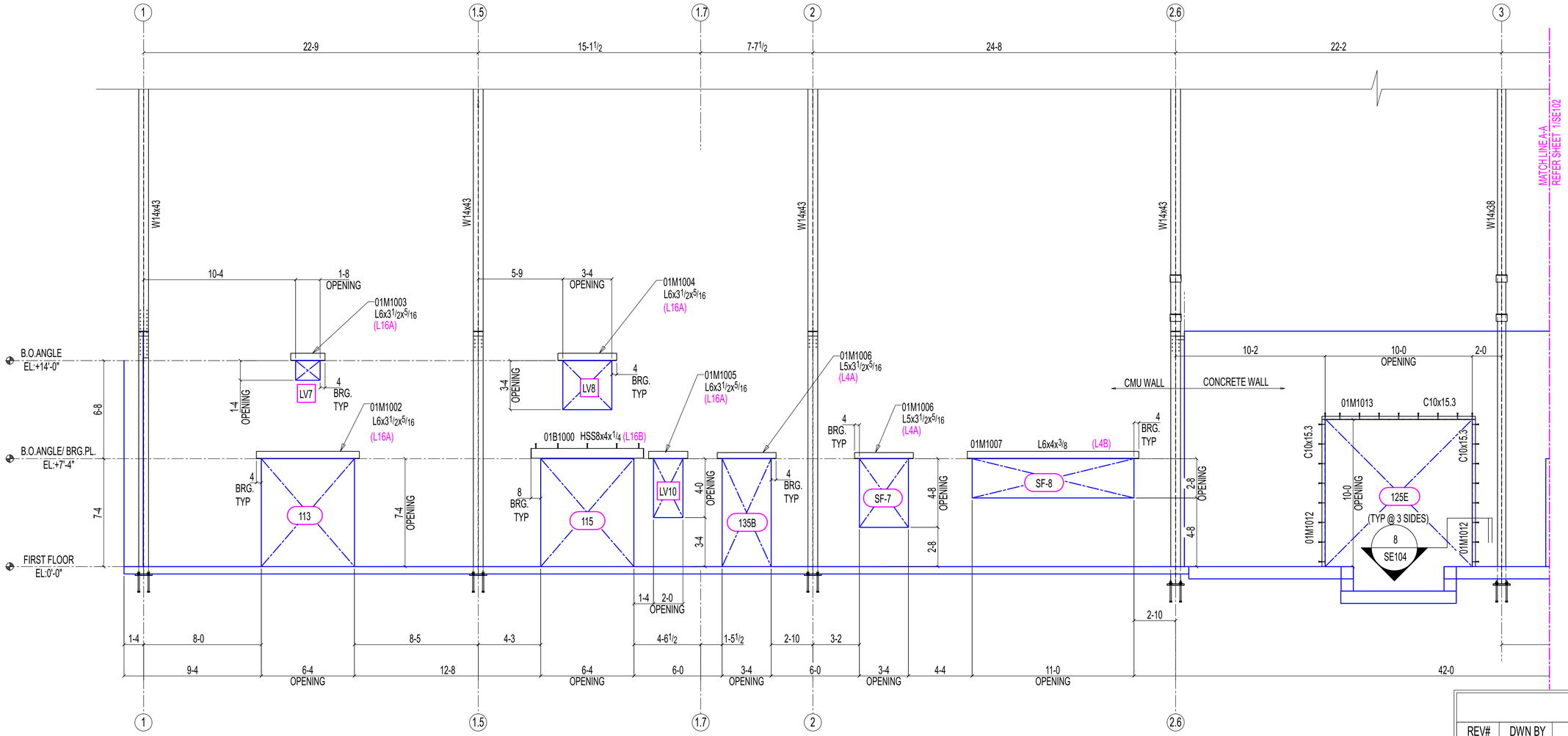

1
SE101

ELEVATION VIEW

(REF: 1/A172,2A200)

OTHER NOT SHOWN FOR CLARITY

NOTES:
1.ELEVATION SHOWN IN (+/-) ARE TO BE BOTTOM OF ANGLE
AND REFERENCED FROM FINISHED FLOOR ELEVATION (0'-0")=DATUM EL:100'-0" (U.N.O)
2.(LXX) DENOTES MASONARY LINTEL ANGLE TYPE.SEE SHEET SE105 FOR TYPICAL SECTIONS.
3.(LVXX)-INDICATES LOUVERS.

REVISIONS

REV#	DWN BY	DESCRIPTION	DATE
A	GSV	ISSUED FOR APPROVAL	May 27 2025

THE INFORMATION NOTED HEREON THIS DRAWING IS THE PROPERTY OF STEEL FAB ENTERPRISES, INC. AND SHALL NOTED BE USED WITHOUT WRITTEN CONSENT.

STEEL FAB
ENTERPRISES, LLC
AISC CERTIFIED FABRICATOR AND ERECTOR
MISCELLANEOUS METALS FABRICATOR AND ERECTORS
623 BAUMGARDNER ROAD, LANCASTER, PA 17603
TEL. (717)464-0330 FAX (717)464-9464
WWW.STEELFABENTERPRISES.COM

PROJECT OWNER : CK CAPITAL, LLC
PROJECT DESCRIPTION : CLEVELAND BROTHERS-MILESBURG
PROJECT ADDRESS : 1025N. EAGLE VALLEY ROAD, HOWARD, PA 16841
CONTRACTOR : KINSLEY CONSTRUCTION, INC.

DRAWN BY : BAS	DATE : 05-20-25	PROJ. NO. : 25012	REV # A
CHECKED BY : SRP	DATE : 05-20-25	DWG NO. : SE101	

DWG DESCRIPTION : ELEVATION VIEW

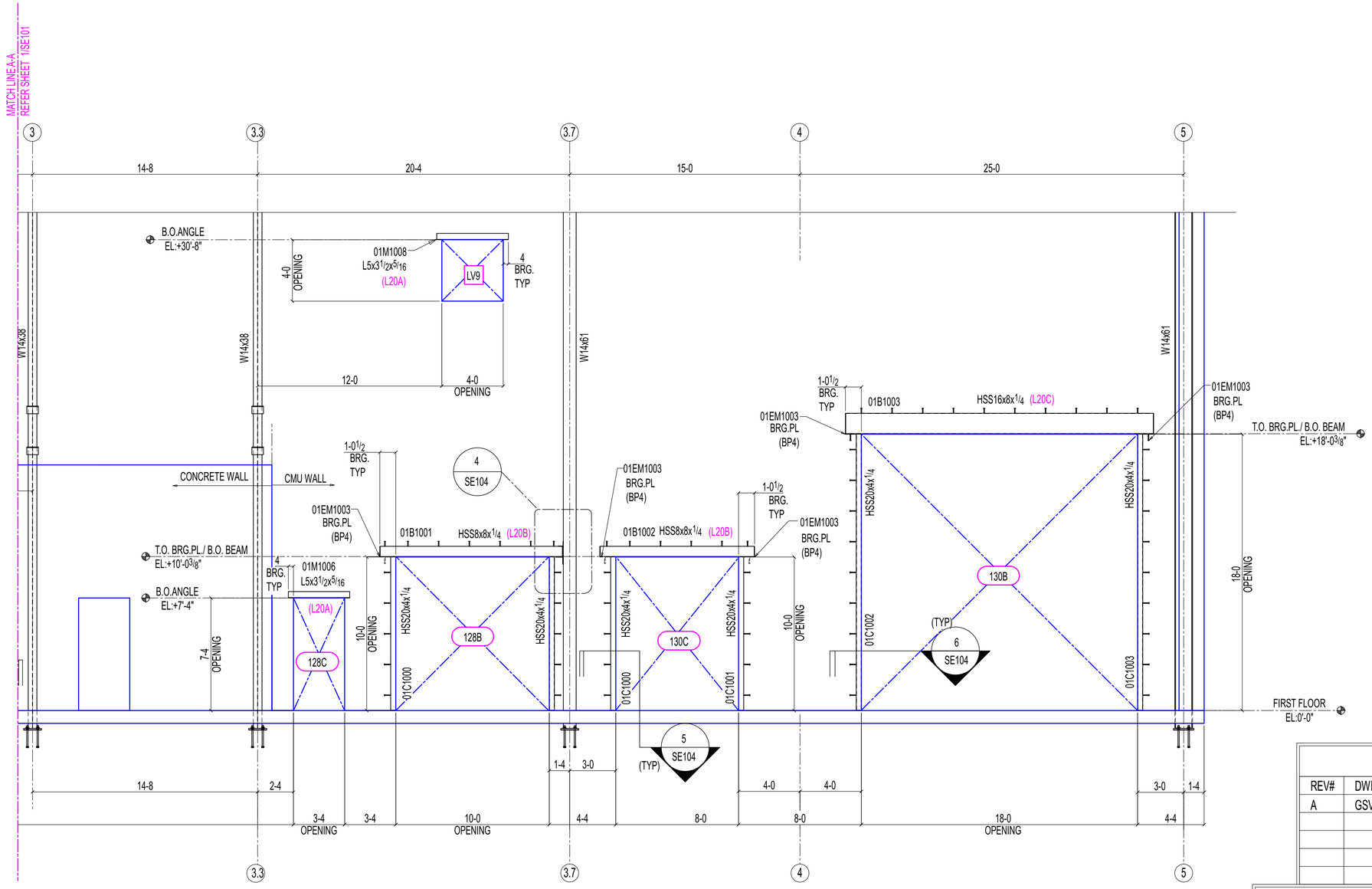

1
SE102

ELEVATION VIEW

(REF: 1/A172,2A200)

OTHER NOT SHOWN FOR CLARITY

NOTES:
1.ELEVATION SHOWN IN (+/-) ARE TO BE BOTTOM OF ANGLE
AND REFERENCED FROM FINISHED FLOOR ELEVATION (0'-0")=DATUM EL:100'-0" (U.N.O)
2.(LXX) DENOTES MASONARY LINTEL ANGLE TYPE.SEE SHEET SE105 FOR TYPICAL SECTIONS.
3.(LVXX)- INDICATES LOUVERS.
4.BP4- DENOTES BEARING PLATE DETAILS SEE SHEETS SE105 FOR TYPICAL DETAILS.

REVISIONS

REV#	DWN BY	DESCRIPTION	DATE
A	GSV	ISSUED FOR APPROVAL	May 27 2025

THE INFORMATION NOTED HEREON THIS DRAWING IS THE PROPERTY OF STEEL FAB ENTERPRISES, INC. AND SHALL NOTED BE USED WITHOUT WRITTEN CONSENT.

STEEL FAB
ENTERPRISES, LLC
AISC CERTIFIED FABRICATOR AND ERECTOR
MISCELLANEOUS METALS FABRICATOR AND ERECTORS
623 BAUMGARDNER ROAD, LANCASTER, PA 17603
TEL. (717)464-0330 FAX (717)464-9464
WWW.STEELFABENTERPRISES.COM

PROJECT OWNER : CK CAPITAL, LLC
PROJECT DESCRIPTION : CLEVELAND BROTHERS-MILESBURG
PROJECT ADDRESS : 1025N. EAGLE VALLEY ROAD, HOWARD, PA 16841
CONTRACTOR : KINSLEY CONSTRUCTION, INC.

DRAWN BY : BAS	DATE : 05-20-25	PROJ. NO. : 25012	REV # A
CHECKED BY : SRP	DATE : 05-20-25	DWG NO. : SE102	

DWG DESCRIPTION : ELEVATION VIEW

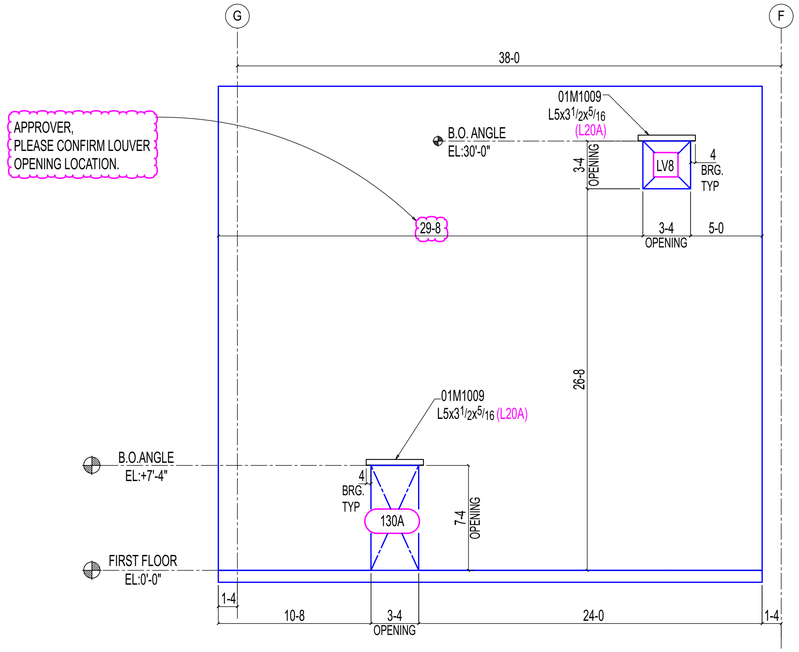

1 SE103 ELEVATION VIEW

(REF: 5/A200)

OTHER NOT SHOWN FOR CLARITY

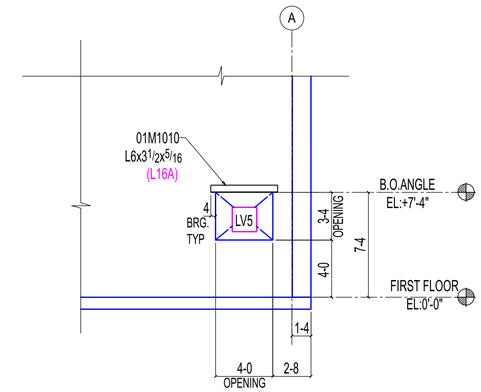

2 SE103 ELEVATION VIEW

(REF: 5/A200)

OTHER NOT SHOWN FOR CLARITY

ERECTOR NOTES:
1.ELEVATION SHOWN IN (+/-) ARE TO BE BOTTOM OF ANGLE
AND REFERENCED FROM FINISHED FLOOR ELEVATION (0'-0")=DATUM EL:100'-0" (U.N.O)
2.(LXX) DENOTES MASONARY LINTEL ANGLE TYPE.SEE SHEET SE105 FOR TYPICAL SECTIONS.
3.(LVXX)-DENOTS LOUVERS.

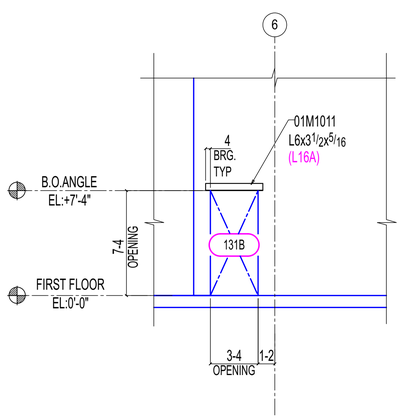

3 SE103 ELEVATION VIEW

(REF: 1/A200)

OTHER NOT SHOWN FOR CLARITY

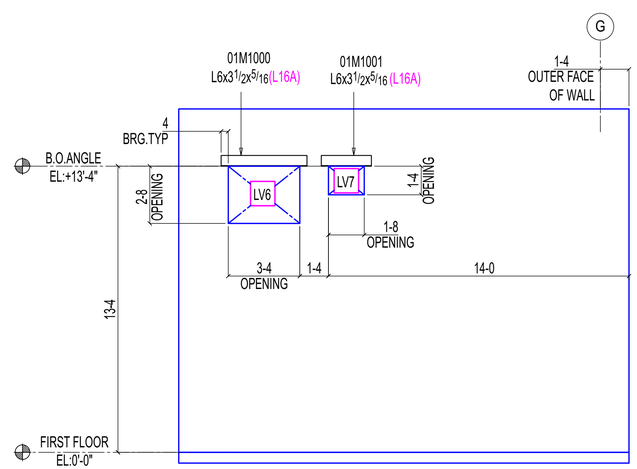

4 SE103 ELEVATION VIEW

(REF: 4/A200)

OTHER NOT SHOWN FOR CLARITY

REVISIONS

REV#	DWN BY	DESCRIPTION	DATE
A	GSV	ISSUED FOR APPROVAL	May 27 2025

THE INFORMATION NOTED HEREON THIS DRAWING IS THE PROPERTY OF STEEL FAB ENTERPRISES, INC. AND SHALL NOTED BE USED WITHOUT WRITTEN CONSENT.

STEEL FAB
ENTERPRISES, LLC
AISC CERTIFIED FABRICATOR AND ERECTOR
MISCELLANEOUS METALS FABRICATOR AND ERECTORS
623 BAUMGARDNER ROAD, LANCASTER, PA 17603
TEL. (717)464-0330 FAX (717)464-9464
WWW.STEELFABENTERPRISES.COM

PROJECT OWNER : CK CAPITAL, LLC

PROJECT DESCRIPTION : CLEVELAND BROTHERS-MILESBURG

PROJECT ADDRESS : 1025N. EAGLE VALLEY ROAD, HOWARD, PA 16841

CONTRACTOR : KINSLEY CONSTRUCTION, INC.

DRAWN BY : BAS	DATE : 05-20-25	PROJ. NO. :	25012	REV # A
CHECKED BY : SRP	DATE : 05-20-25	DWG NO. :	SE103	

DWG DESCRIPTION : ELEVATION VIEW

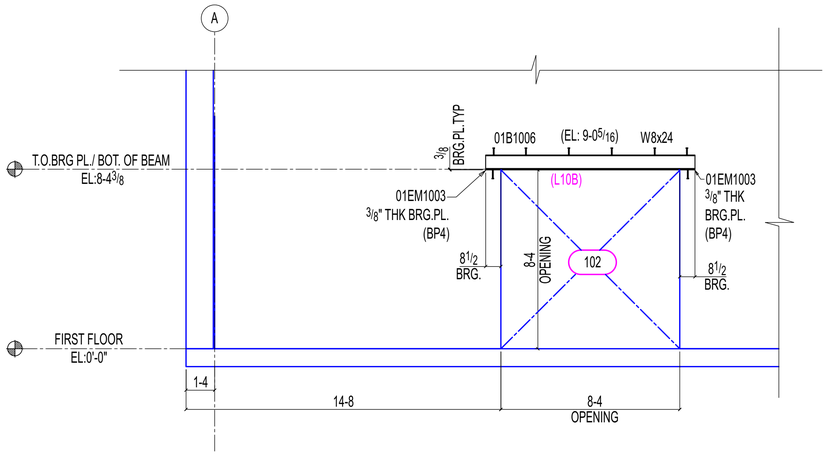

1 SE104 ELEVATION VIEW

(REF: 1/S105,1/A101)

OTHER NOT SHOWN FOR CLARITY

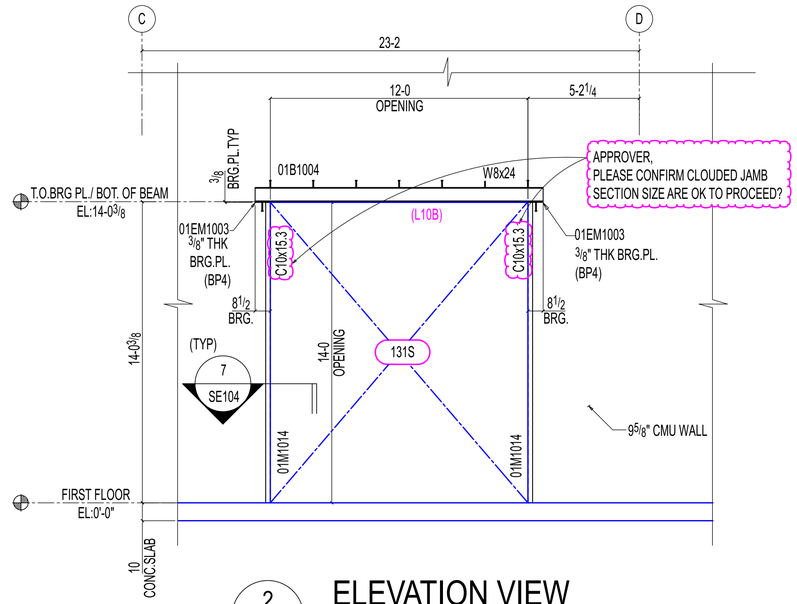

2 SE104 ELEVATION VIEW

(REF: 1/S105,1/A101)

OTHER NOT SHOWN FOR CLARITY

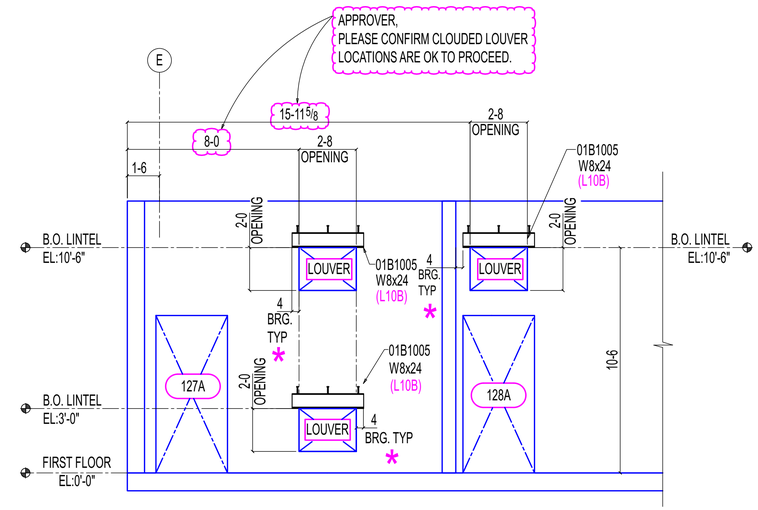

3 SE104 ELEVATION VIEW

(REF: 1/A173,H111)

OTHER NOT SHOWN FOR CLARITY

* -APPROVER,
PLEASE CONFIRM THE REQUIREMENT OF BEARING PLATE AT BOTH END OF WF HEADER BEAMS AT LOUVER OPENINGS UPTO 2-8 AT THIS PROJECT SINCE DRAWING DOESN'T SHOW BEARING PLATE FOR THE SAME.

IF YES,PLEASE PROVIDE BEARING PLATE DETAILS.

ERECTOR NOTES:
1.ELEVATION SHOWN IN (+/-) ARE TO BE BOTTOM OF ANGLE AND REFERENCED FROM FINISHED FLOOR ELEVATION (0'-0")=DATUM EL:100'-0" (U.N.O)
2.(LXX) DENOTES MASONARY LINTEL ANGLE TYPE.SEE SHEET SE105 FOR TYPICAL SECTIONS.
3.(LVXX)- DENOTES LOUVERS.
4.BP4- DENOTES BEARING PLATE DETAILS SEE SHEETS SE105 FOR TYPICAL DETAILS.

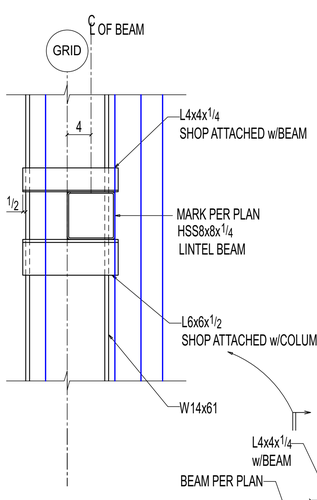

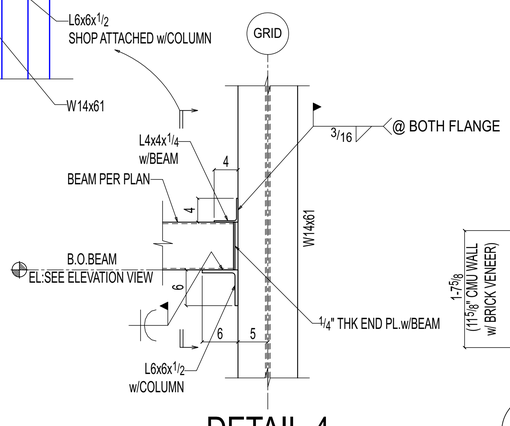

DETAIL-4

REF:(3/S105)

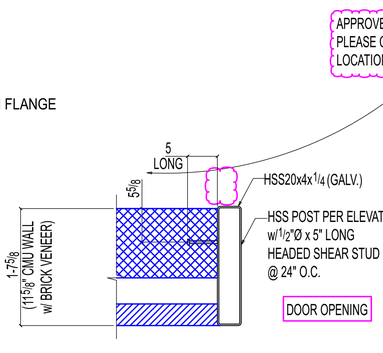

5 SE104 SECTION

(REF: A/S102,B/S102,C/S102,D/S102)

FULLY GROUT
CMU CELLS

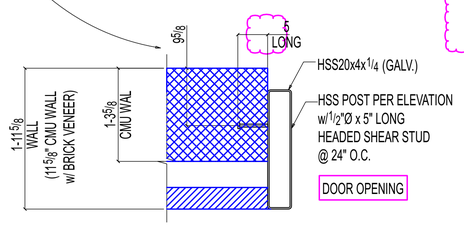

6 SE104 SECTION

(REF: A/S102,B/S102,C/S102,D/S102)

FULLY GROUT
CMU CELLS

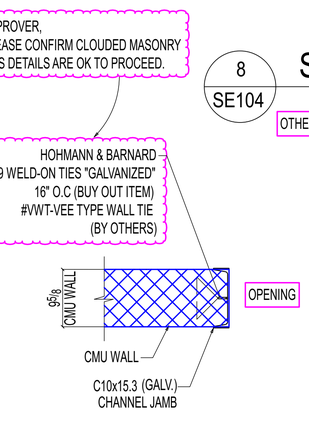

7 SE104 SECTION

OTHERS NOT SHOWN FOR CLARITY

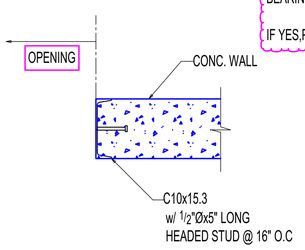

8 SE104 SECTION

OTHERS NOT SHOWN FOR CLARITY

REVISIONS

REV#	DWN BY	DESCRIPTION	DATE
A	GSV	ISSUED FOR APPROVAL	May 27 2025

THE INFORMATION NOTED HEREON THIS DRAWING IS THE PROPERTY OF STEEL FAB ENTERPRISES, INC. AND SHALL NOTED BE USED WITHOUT WRITTEN CONSENT.

STEEL FAB
ENTERPRISES, LLC
AISC CERTIFIED FABRICATOR AND ERECTOR
MISCELLANEOUS METALS FABRICATOR AND ERECTORS
623 BAUMGARDNER ROAD, LANCASTER, PA 17603
TEL. (717)464-0330 FAX (717)464-9464
WWW.STEELFABENTERPRISES.COM

PROJECT OWNER : CK CAPITAL, LLC

PROJECT DESCRIPTION : CLEVELAND BROTHERS-MILESBURG

PROJECT ADDRESS : 1025N. EAGLE VALLEY ROAD, HOWARD, PA 16841

CONTRACTOR : KINSLEY CONSTRUCTION, INC.

DRAWN BY : BAS	DATE : 05-20-25	PROJ. NO. : 25012	REV # A
CHECKED BY : SRP	DATE : 05-20-25	DWG NO. : SE104	

DWG DESCRIPTION : ELEVATION VIEW & DETAIL & SECTION

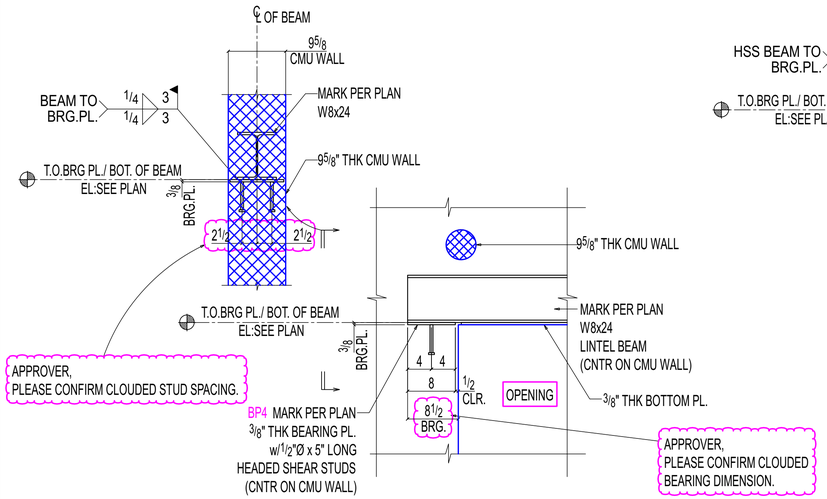

TYPICAL W FLANGE BEAM LINTEL TO BEARING PLATE DETAIL FOR BP4

MARK	BEARING PLATE
BP4	3/8" x 8" x 9"

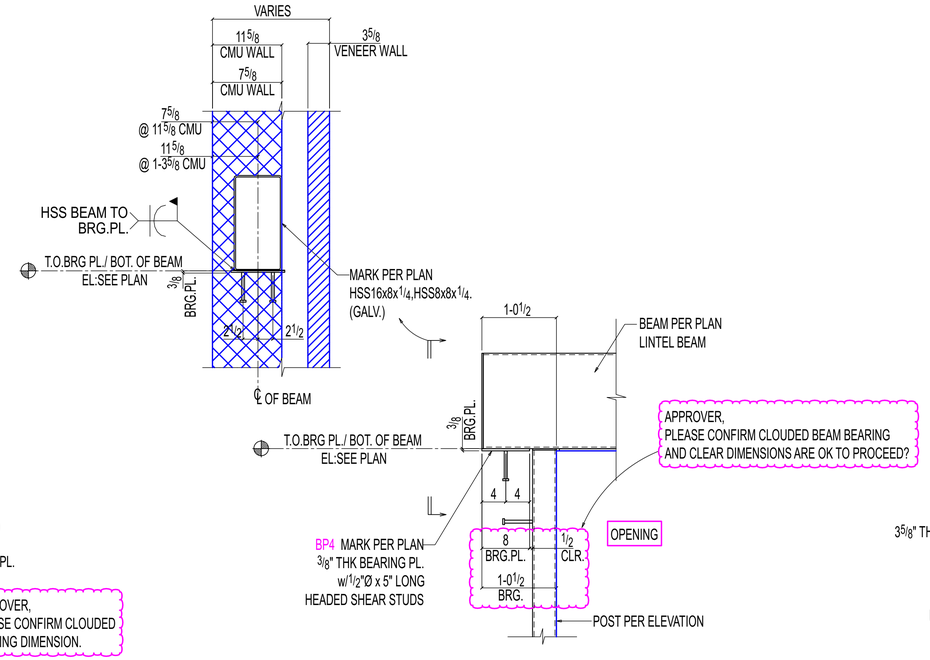

TYPICAL HSS BEAM LINTEL & BEARING PLATE DETAIL FOR BP4

MARK	BEARING PLATE
BP4	3/8" x 8" x 9"

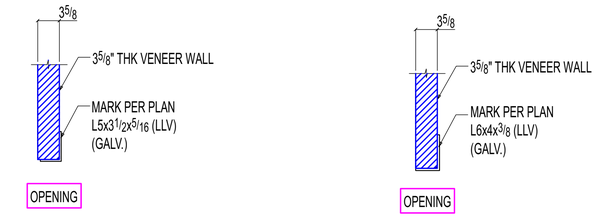

CONDITION-1 FOR L4A

CONDITION-2 FOR L4B

TYPICAL LINTEL ANGLE SECTION @ VENEER WALL

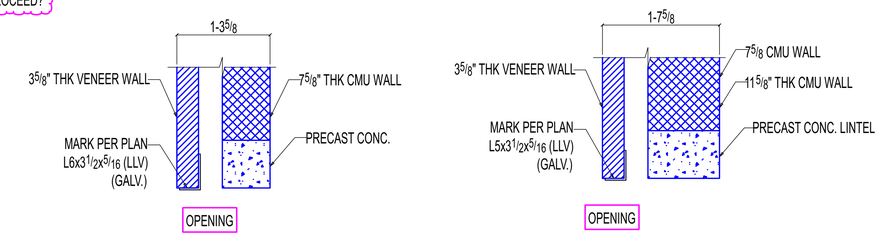

CONDITION-1 FOR L16A

CONDITION-2 FOR L20A

TYPICAL LINTEL ANGLE SECTION @ CMU WALL & VENEER WALL

* -APPROVER, PLEASE CONFIRM ALL CLOUDED BEAM LOCATION FROM FACE OF WALL.

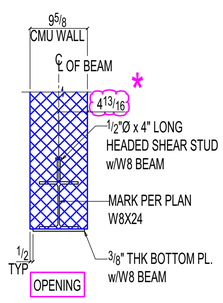

CONDITION FOR L10B

TYPICAL LINTEL W FLANGE BEAM SECTION @ CMU WALL

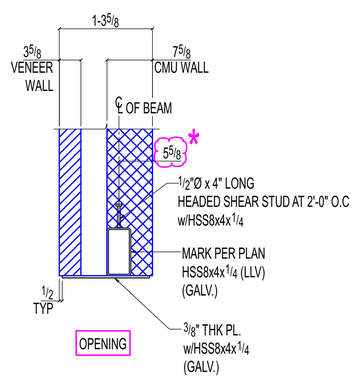

CONDITION-1 FOR L16B

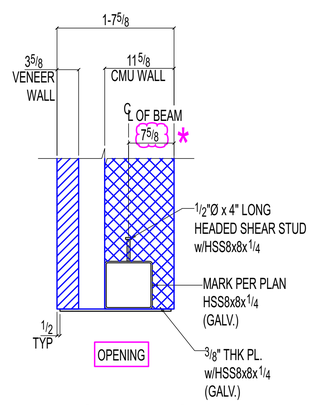

CONDITION-2 FOR L20B

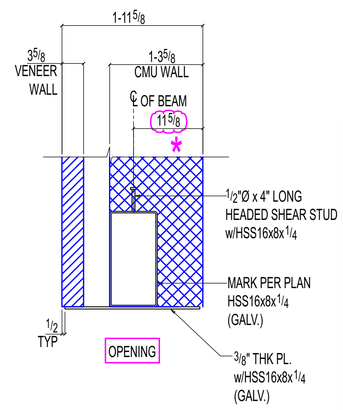

CONDITION-3 FOR L20C

TYPICAL HSS BEAM LINTEL SECTION @ CMU WALL & VENEER WALL

REVISIONS

REV#	DWN BY	DESCRIPTION	DATE
A	GSV	ISSUED FOR APPROVAL	May 27 2025

THE INFORMATION NOTED HEREON THIS DRAWING IS THE PROPERTY OF STEEL FAB ENTERPRISES, INC. AND SHALL NOT BE USED WITHOUT WRITTEN CONSENT.

STEEL FAB ENTERPRISES, LLC
AISC CERTIFIED FABRICATOR AND ERECTOR
MISCELLANEOUS METALS FABRICATOR AND ERECTORS
623 BAUMGARDNER ROAD, LANCASTER, PA 17603
TEL. (717)464-0330 FAX (717)464-9464
WWW.STEELFABENTERPRISES.COM

PROJECT OWNER : CK CAPITAL, LLC

PROJECT DESCRIPTION : CLEVELAND BROTHERS-MILESBURG

PROJECT ADDRESS : 1025N. EAGLE VALLEY ROAD, HOWARD, PA 16841

CONTRACTOR : KINSLEY CONSTRUCTION, INC.

DRAWN BY : BAS	DATE : 05-20-25	PROJ. NO. : 25012	REV # A
CHECKED BY : SRP	DATE : 05-20-25	DWG NO. : SE105	

DWG DESCRIPTION : TYPICAL SECTIONS