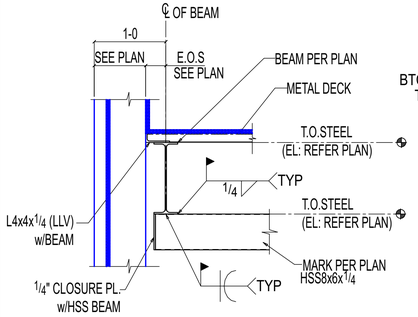

1 SE222 **SECTION**
(REF: 1/A410)
OTHERS NOT SHOWN FOR CLARITY

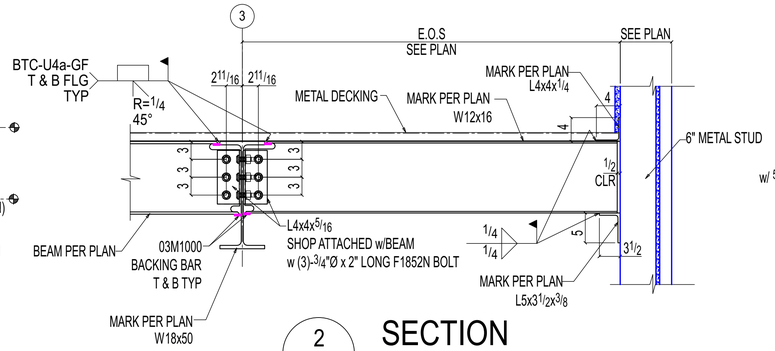

2 SE222 **SECTION**
(REF: 17/S500)
OTHERS NOT SHOWN FOR CLARITY

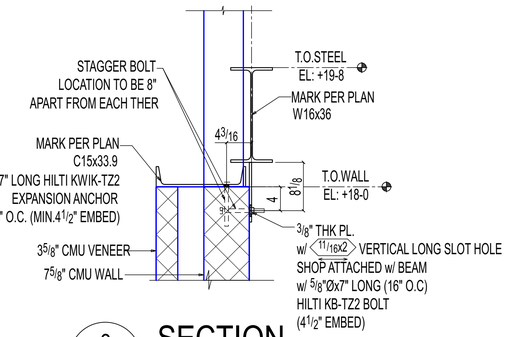

3 SE222 **SECTION**
(REF: 5/S500)
OTHERS NOT SHOWN FOR CLARITY

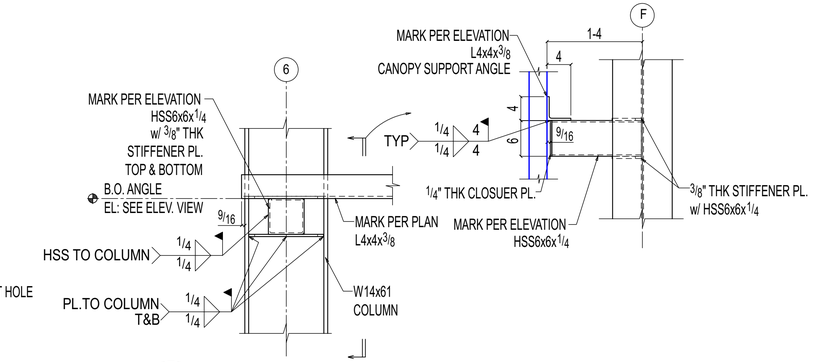

4 SE222 **DETAIL**
(REF: 19/S501)
OTHERS NOT SHOWN FOR CLARITY

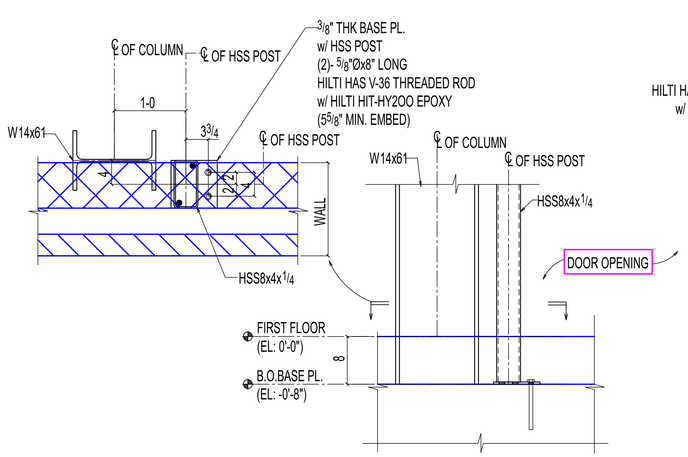

5 SE222 **DETAIL**
(REF: 10/S304)

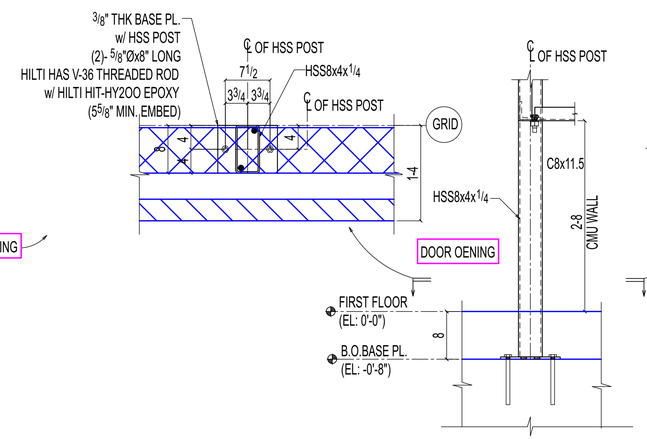

6 SE222 **DETAIL**
(REF: 10/S304)

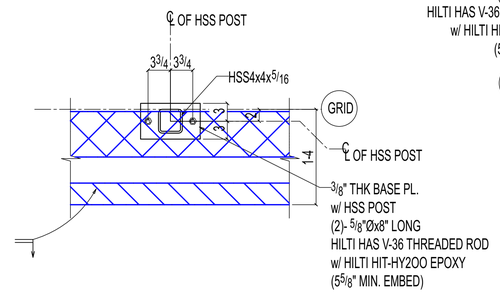

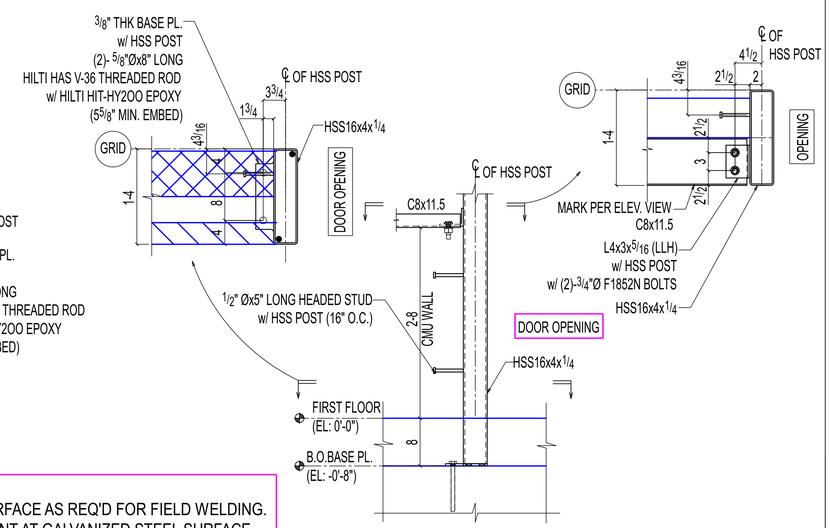

7 SE222 **DETAIL**
(REF: 9/S304)

ERECTOR NOTE:
1. WIRE BRUSH SHOP PRIMER OR GALVANIZED SURFACE AS REQ'D FOR FIELD WELDING.
2. TOUCHUP ALL FIELD WELDS WITH ZINC RICH PAINT AT GALVANIZED STEEL SURFACE.
3. TOUCHUP ALL FIELD WELDS WITH PRIMER AT PRIMED STEEL.

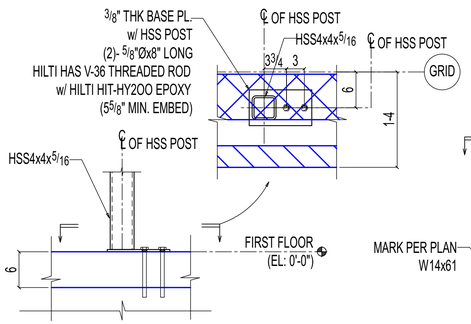

8 SE222 **DETAIL**
(REF: 10/S304 SIM)

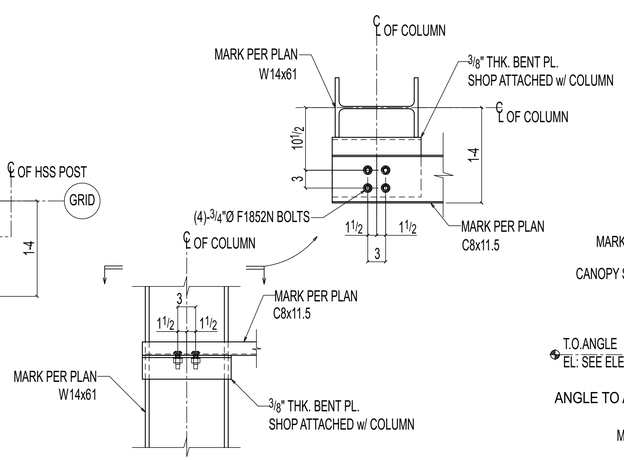

9 SE222 **DETAIL**
(REF: 3/S304)
OTHERS NOT SHOWN FOR CLARITY

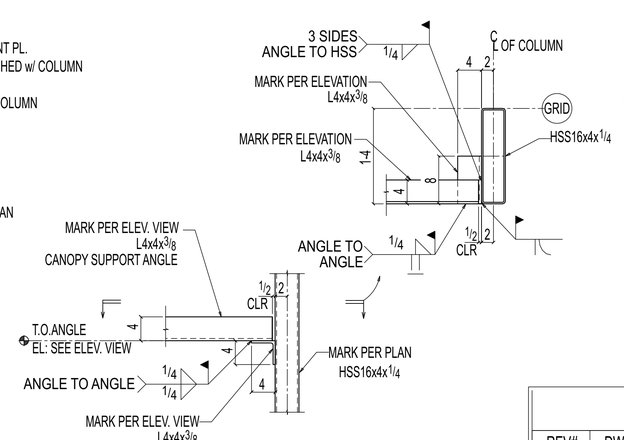

10 SE222 **DETAIL**
(REF: 19/S501) (SIM)
(OTHERS NOT SHOWN FOR CLARITY)

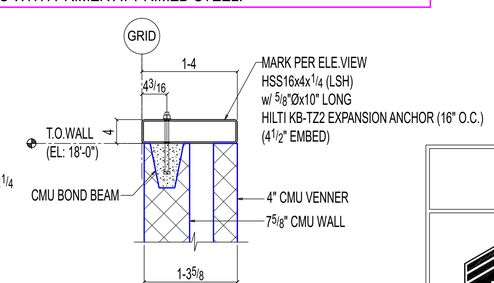

11 SE222 **SECTION**
(REF: 15/S500)
OTHERS NOT SHOWN FOR CLARITY

REVISIONS

REV#	DWN BY	DESCRIPTION	DATE
A	SRP	ISSUED FOR APPROVAL	Jun 11 2025
0	GSV	ISSUED FOR CONSTRUCTION	Sep 5 2025

THE INFORMATION NOTED HEREON THIS DRAWING IS THE PROPERTY OF STEEL FAB ENTERPRISES, INC. AND SHALL NOT BE USED WITHOUT WRITTEN CONSENT.

STEEL FAB
ENTERPRISES, LLC
AISC CERTIFIED FABRICATOR AND ERECTOR
MISCELLANEOUS METALS FABRICATOR AND ERECTORS
623 BAUMGARDNER ROAD, LANCASTER, PA 17603
TEL. (717)464-0330 FAX (717)464-9464
WWW.STEELFABENTERPRISES.COM

PROJECT OWNER : CK CAPITAL, LLC
PROJECT DESCRIPTION : CLEVELAND BROTHERS-MILESBURG
PROJECT ADDRESS : 1025N. EAGLE VALLEY ROAD, HOWARD, PA 16841
CONTRACTOR : KINSLEY CONSTRUCTION, INC.

DRAWN BY : BAS	DATE : 05-20-25	PROJ. NO. :	25012	REV # 0
CHECKED BY : SRP	DATE : 05-20-25	DWG NO. :	SE222	

DWG DESCRIPTION : SECTION & DETAILS