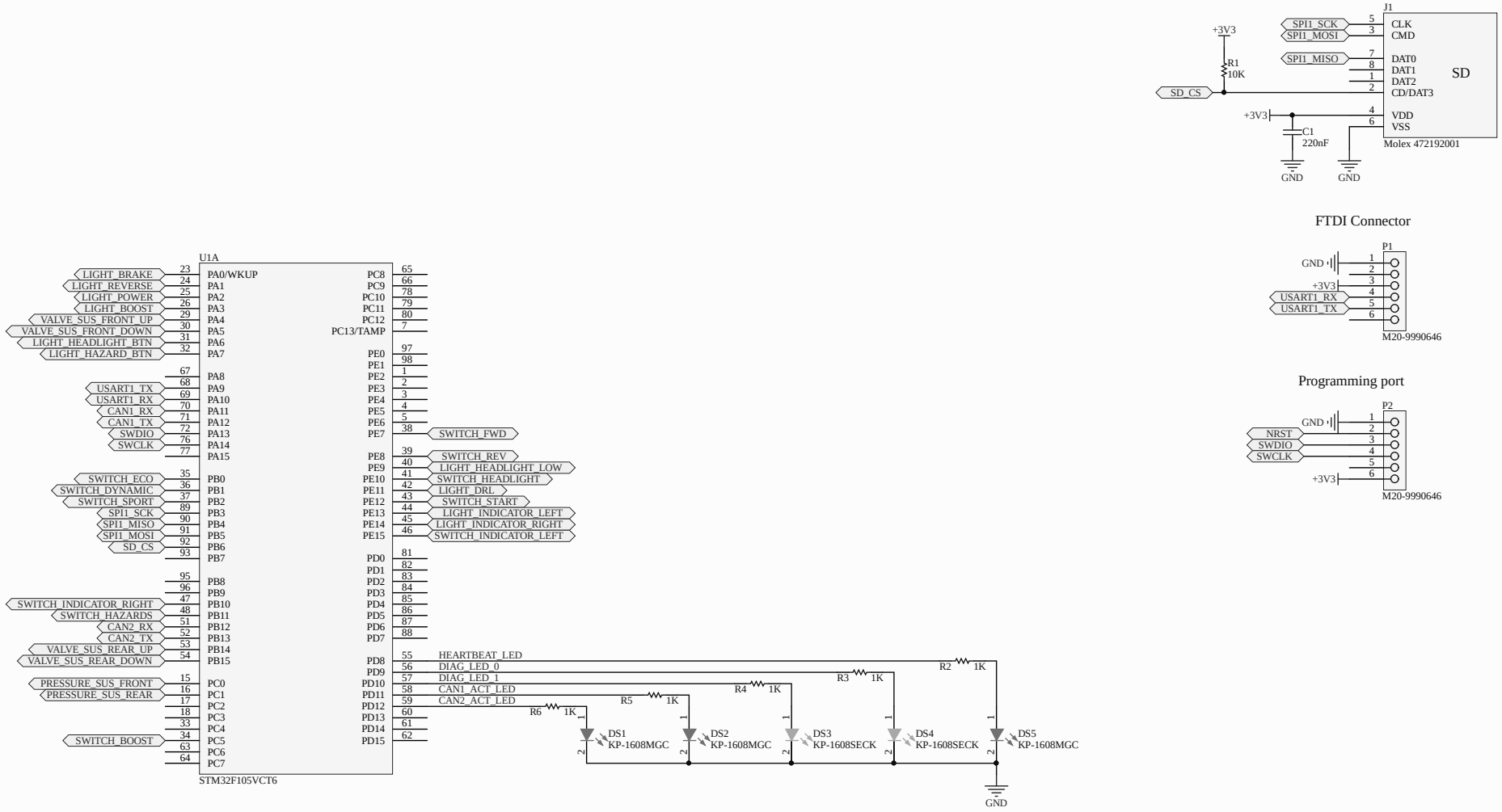

Title	***Microcontroller & SD***	
Size: A3	Number:1	Revision:*
Date: 23/04/2020	Time: 15:35:13	Sheet1 of 4
File: Microcontroller.SchDoc		

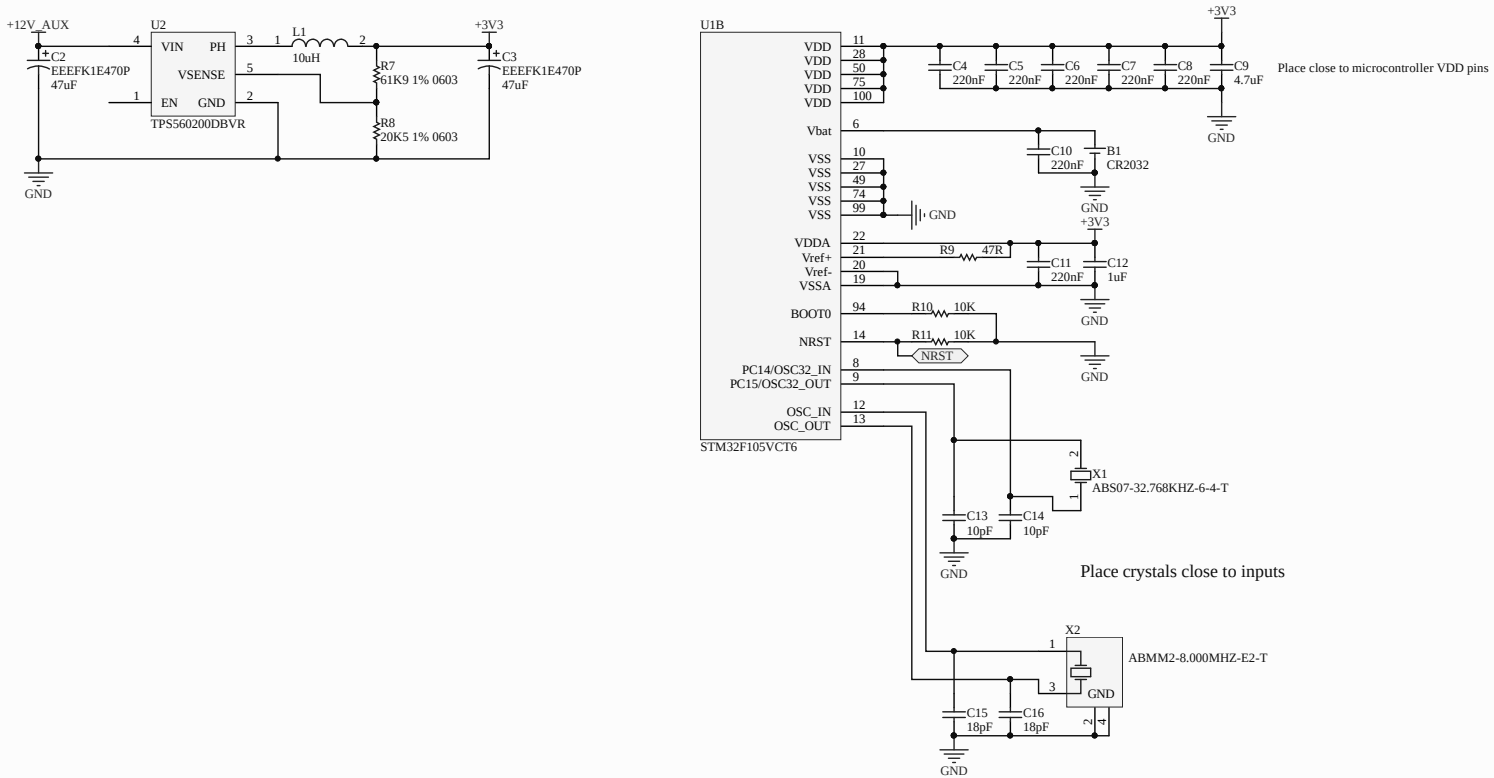

Title	***Power Supplies & Clocks***	
Size: A3	Number:2	Revision:*
Date: 23/04/2020	Time: 15:35:13	Sheet 2 of 4
File: Power Supplies.SchDoc		

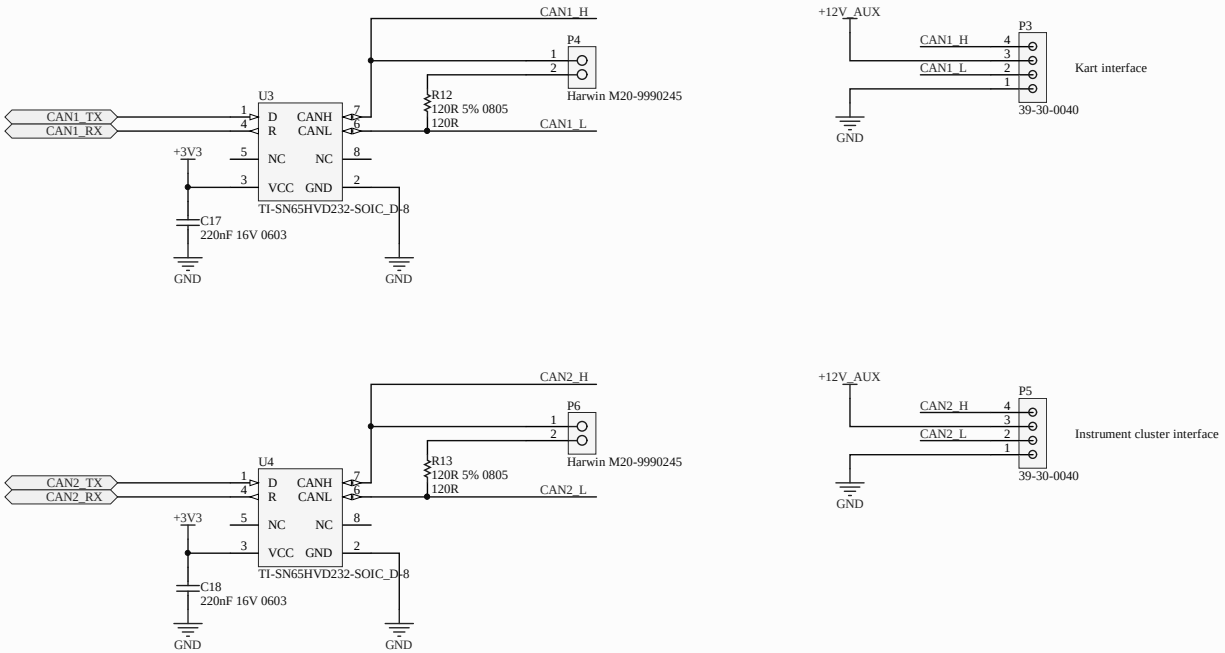

Title *CAN Interfaces*		
Size: A3	Number:3	Revision:*
Date: 23/04/2020	Time: 15:35:14	Sheet3 of 4
File: CAN Interfaces.SchDoc		

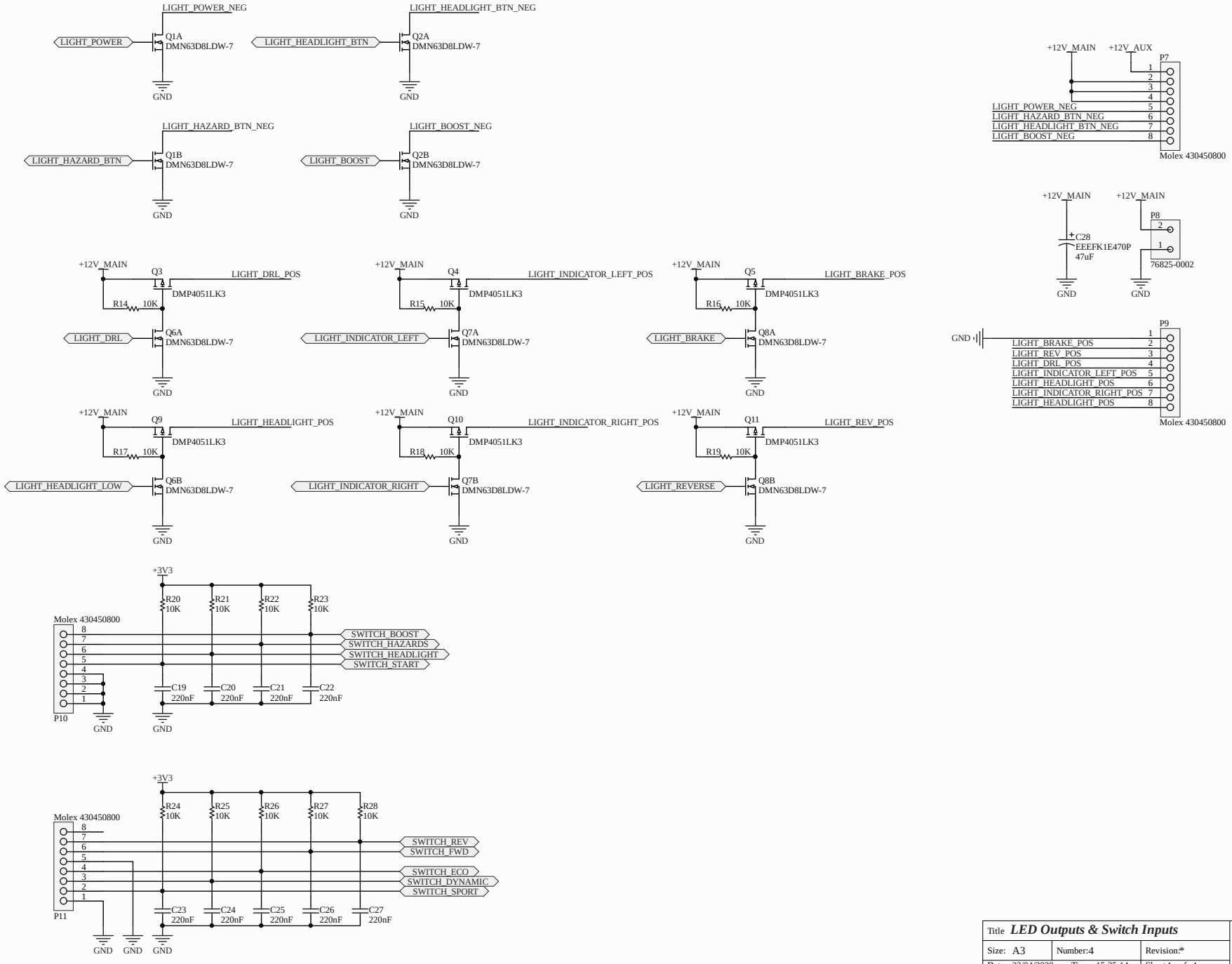

Title	***LED Outputs & Switch Inputs***	
Size: A3	Number:4	Revision:*
Date: 23/04/2020	Time: 15:35:14	Sheet 4 of 4
File: LED-Switches.SchDoc		

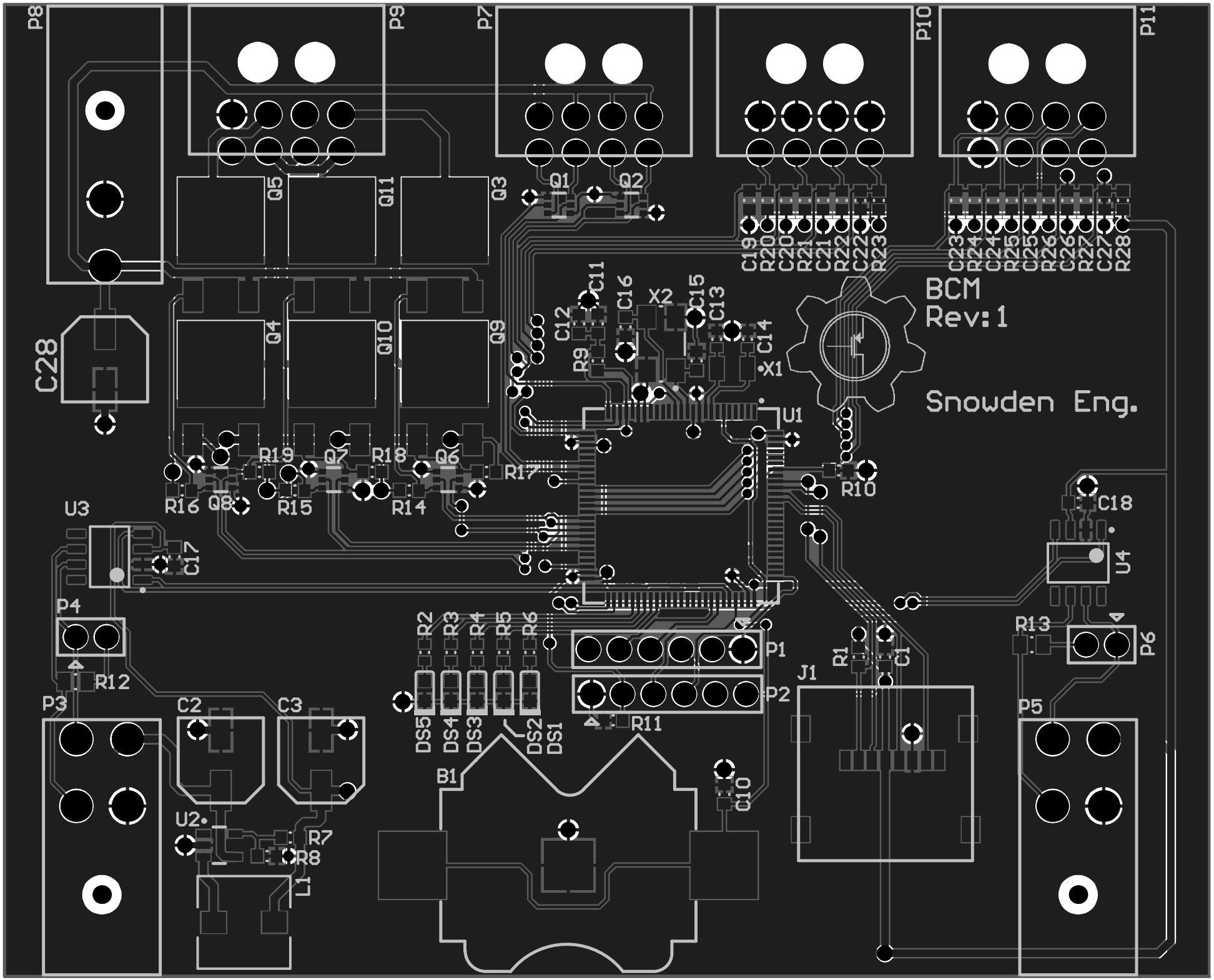
P8
P9
P7
P10
P11
Q5
Q11
Q3
Q1
Q2
C19
R20
C20
R21
C21
R22
C22
R23
C23
R24
C24
R25
C25
R26
C26
R27
C27
R28
BCM
Rev:1
Snowden Eng.
C28
Q4
Q10
Q9
C11
C12
C16
X2
C15
C13
C14
R9
X1
U1
R19
Q7
R18
Q6
R17
R16
Q8
R15
R14
R10
U3
C17
C18
U4
P4
R12
R2
R3
R4
R5
R6
P1
P2
R11
R13
P6
R1
C1
J1
P3
C2
C3
DS5
DS4
DS3
DS2
DS1
B1
C10
P5
U2
R7
R8
L1

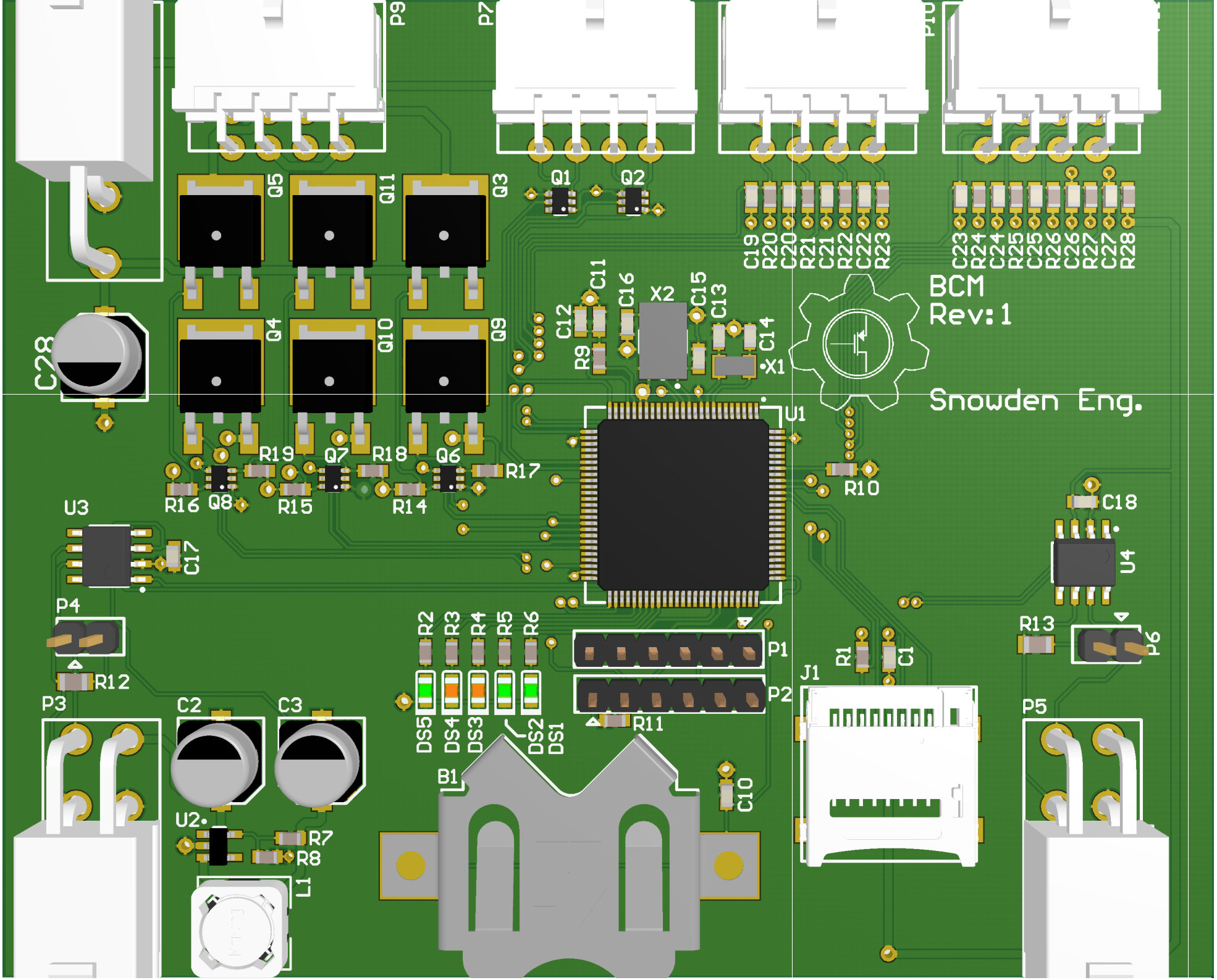
P9
P7
P10
Q5
Q11
Q3
Q1
Q2
Q4
Q10
Q9
C19
R20
C20
R21
C21
R22
C22
R23
C23
R24
C24
R25
C25
R26
C26
R27
C27
R28
C11
C12
R9
C16
X2
C15
C13
C14
X1
BCM
Rev:1
Snowden Eng.
C28
U1
R19
Q7
R18
Q6
R17
R16
Q8
R15
R14
R10
U3
C17
C18
U4
P4
R12
R2
R3
R4
R5
R6
P1
P2
R11
R13
P6
R1
C1
J1
P3
C2
C3
DS5
DS4
DS3
DS2
DS1
B1
C10
P5
U2
R7
R8
L1

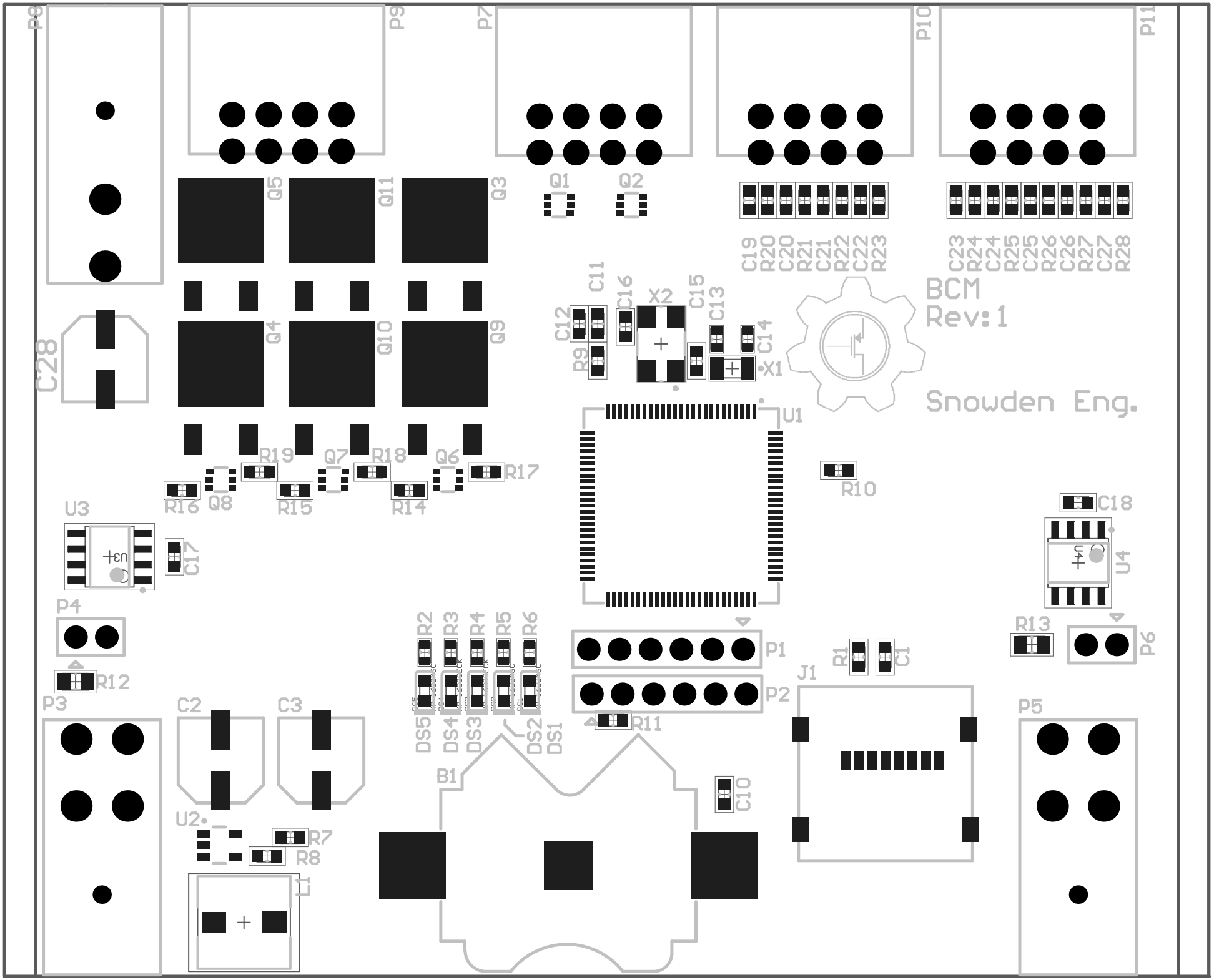
P8
P9
P7
P10
P11
Q5
Q11
Q3
Q1
Q2
C19
R20
C20
R21
C21
R22
C22
R23
C23
R24
C24
R25
C25
R26
C26
R27
C27
R28
C11
C16
X2
C15
C13
C12
C14
R9
X1
BCM
Rev:1
Snowden Eng.
C28
Q4
Q10
Q9
U1
R19
Q7
R18
Q6
R17
R10
R16
Q8
R15
R14
U3
C17
C18
U4
P4
R2
R3
R4
R5
R6
P1
R13
P6
R12
P2
R1
C1
J1
P3
C2
C3
DS5
DS4
DS3
DS2
DS1
R11
P5
B1
C10
U2
R7
R8
C4

C8
C4
C2
C1
C3
C6