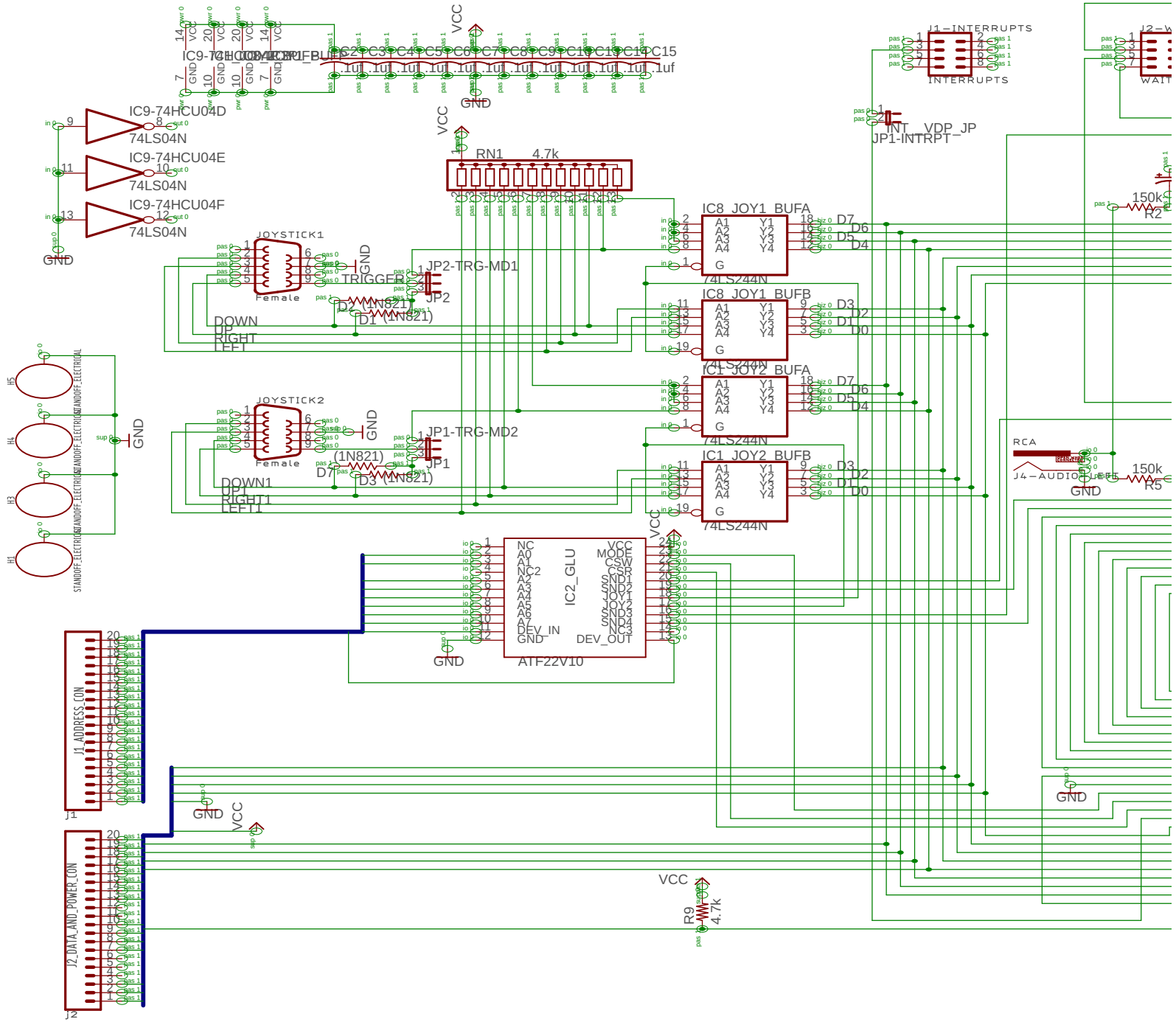
IC9-74HCU04D
74LS04N
IC9-74HCU04E
74LS04N
IC9-74HCU04F
74LS04N
GND
VCC
RN1 4.7k
JOYSTICK1
Female
TRIGGER
JP2-TRG-MD1
JP2
D2 (1N821)
D1 (1N821)
DOWN
UP
RIGHT
LEFT
JOYSTICK2
JP1-TRG-MD2
JP1
D7 (1N821)
D3 (1N821)
DOWN1
UP1
RIGHT1
LEFT1
IC8_JOY1_BUFA
IC8_JOY1_BUFB
IC1_JOY2_BUFA
IC1_JOY2_BUFB
74LS244N
D7
D6
D5
D4
D3
D2
D1
D0
J1-INTERRUPTS
INTERRUPTS
INT_VDP_JP
JP1-INTRPT
150k
R2
R5
RCA
J4-AUDIO
IC2_GLU
ATF22V10
NC
A0
A1
NC2
A2
A3
A4
A5
A6
A7
DEV_IN
GND
VCC
MODE
CSW
CSR
SND1
SND2
JOY1
JOY2
SND3
SND4
NC3
DEV_OUT
J1_ADDRESS_CON
J2_DATA_AND_POWER_CON
R9
4.7k

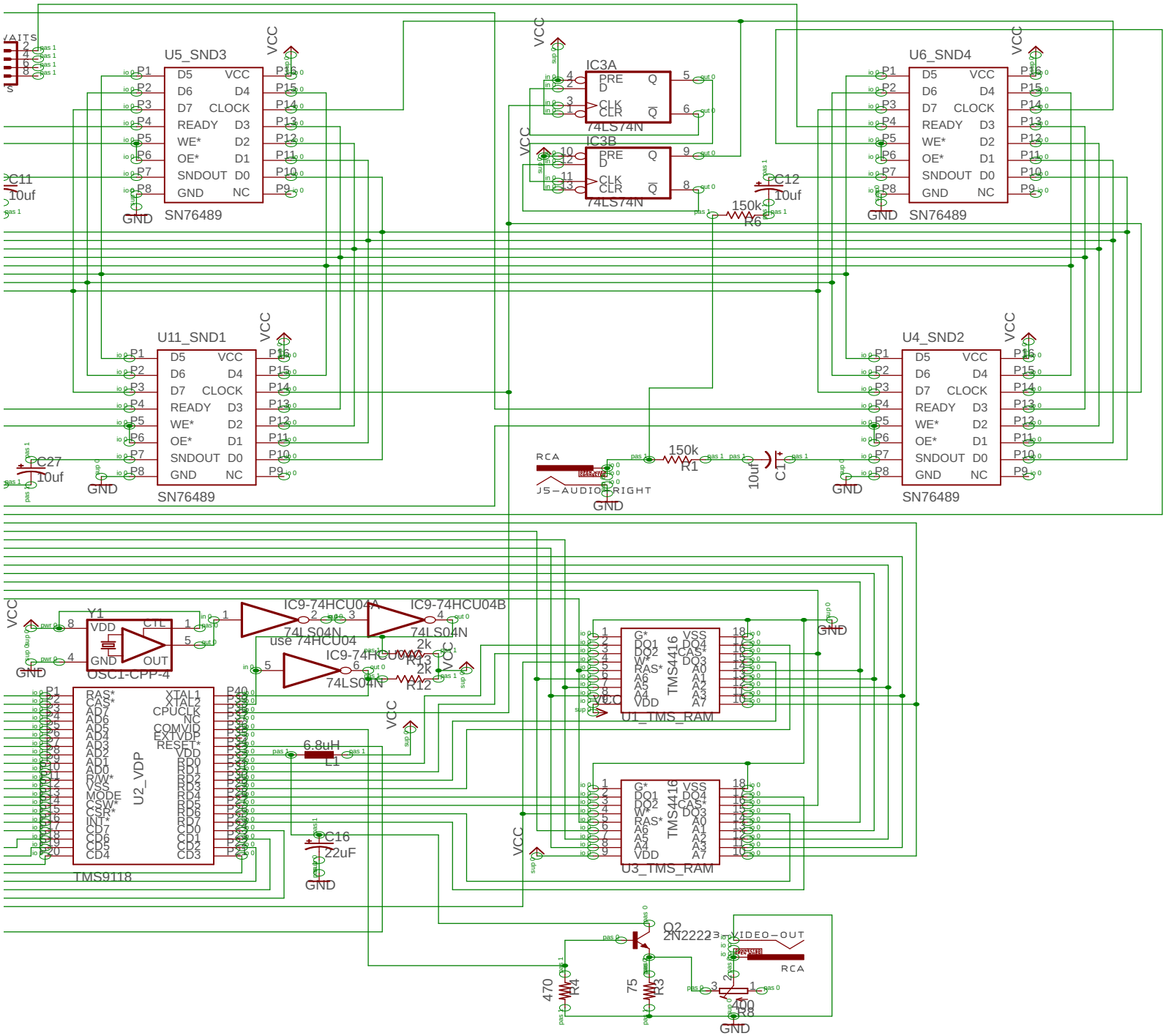
WATTS
U5_SND3
SN76489
U6_SND4
SN76489
U11_SND1
SN76489
U4_SND2
SN76489
IC3A
74LS74N
IC3B
74LS74N
C11
10uf
C12
10uf
C27
10uf
150k
R6
150k
R1
10uf
C1
RCA
J5-AUDIO-RIGHT
GND
VCC
Y1
OSC1-CPP-4
IC9-74HCU04A
IC9-74HCU04B
74LS04N
use 74HCU04
IC9-74HCU04C
74LS04N
2k
R13
2k
R12
TMS9118
U2_VDP
6.8uH
L1
C16
22uF
TMS4416
U1_TMS_RAM
U3_TMS_RAM
Q2
2N2222
VIDEO-OUT
470
R4
75
R3
400
R8