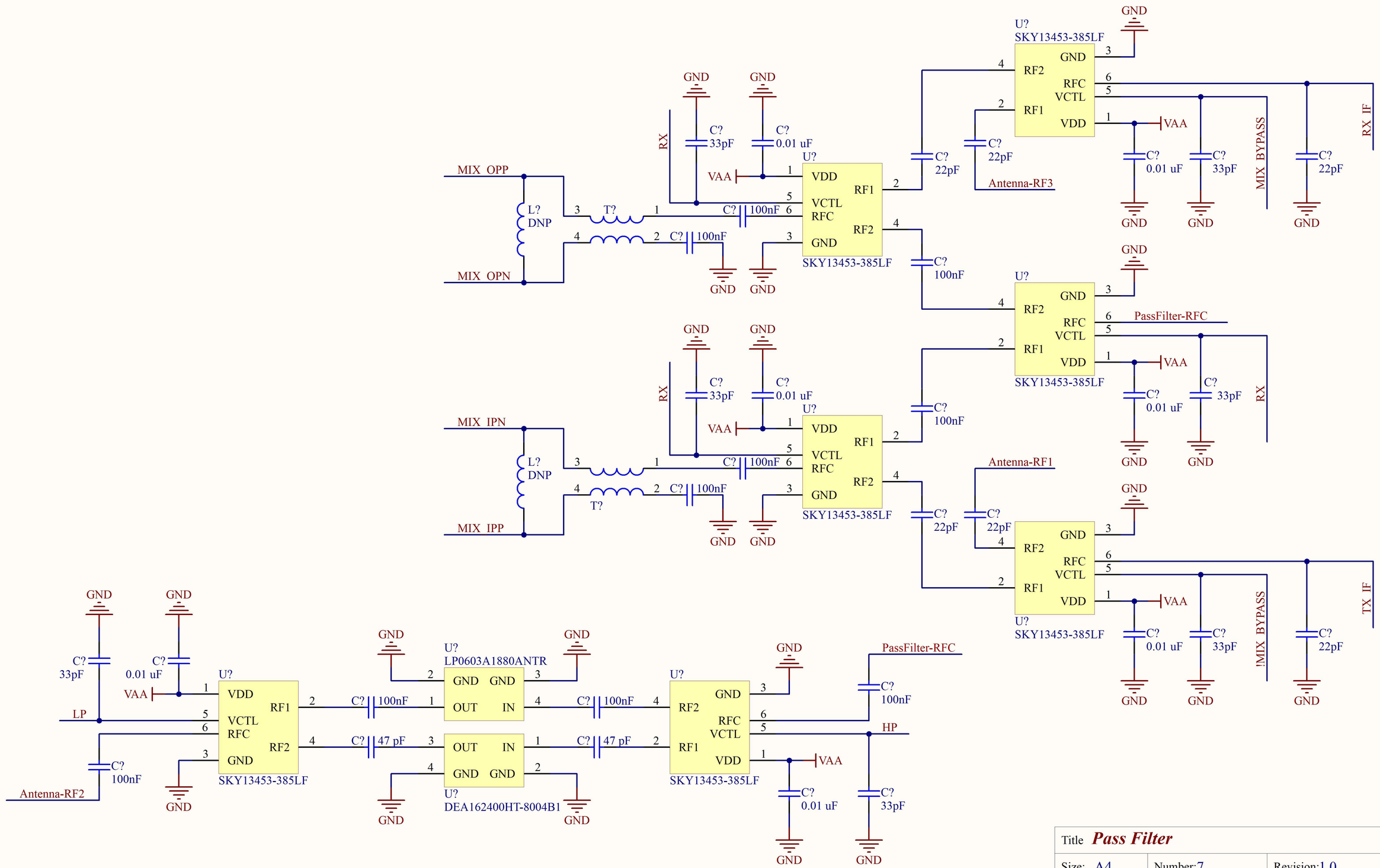

Title	***Pass Filter***		
Size: A4	Number:7	Revision:1.0	
Date: 7/21/2025	Time: 10:15:01 AM	Sheet 7 of 8	
File: D:\Repository\Beepro\altiumprojects\HackRF\PassFilter.SchDoc			

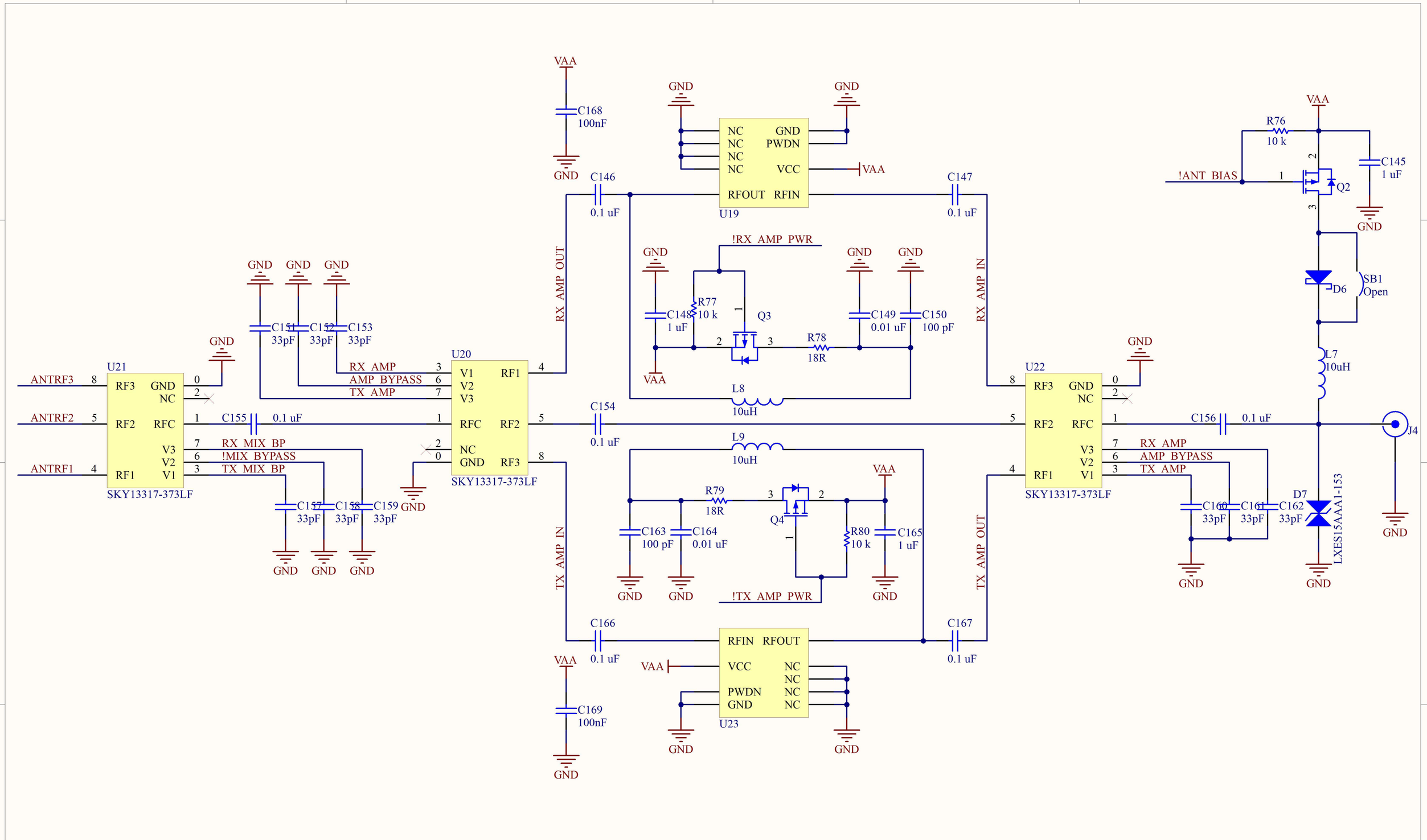

Title	*Antenna*		
Size: A4	Number:6	Revision:1.0	
Date: 7/21/2025	Time: 10:06:57 AM	Sheet 7 of 7	
File: D:\Repository\Beepro\altiumprojects\HackRF\Antenna.SchDoc			

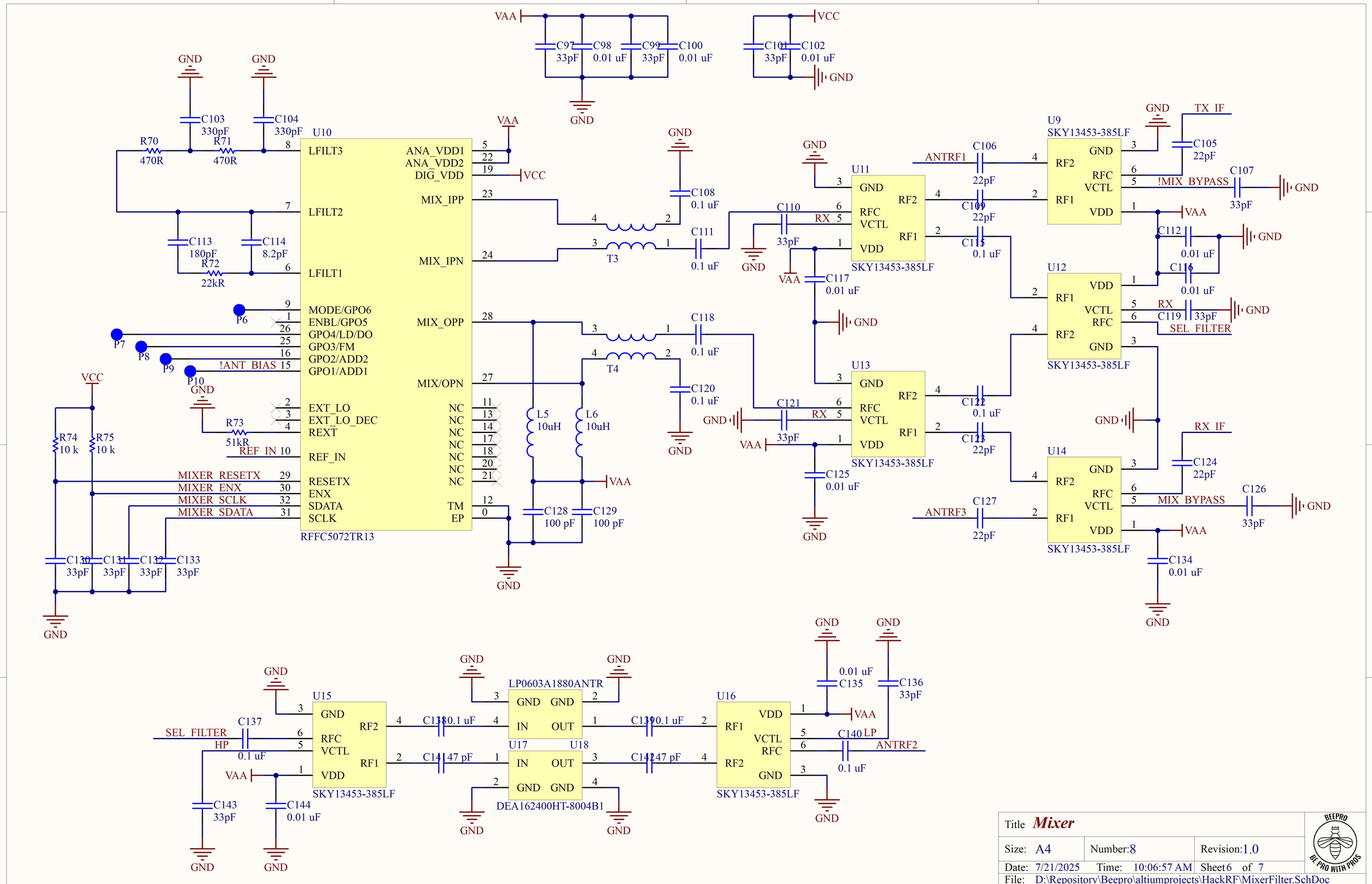

Title	*Mixer*		
Size: A4	Number:8	Revision:1.0	
Date: 7/21/2025	Time: 10:06:57 AM	Sheet 6 of 7	
File: D:\Repository\Beepro\altiumprojects\HackRF\MixerFilter.SchDoc			

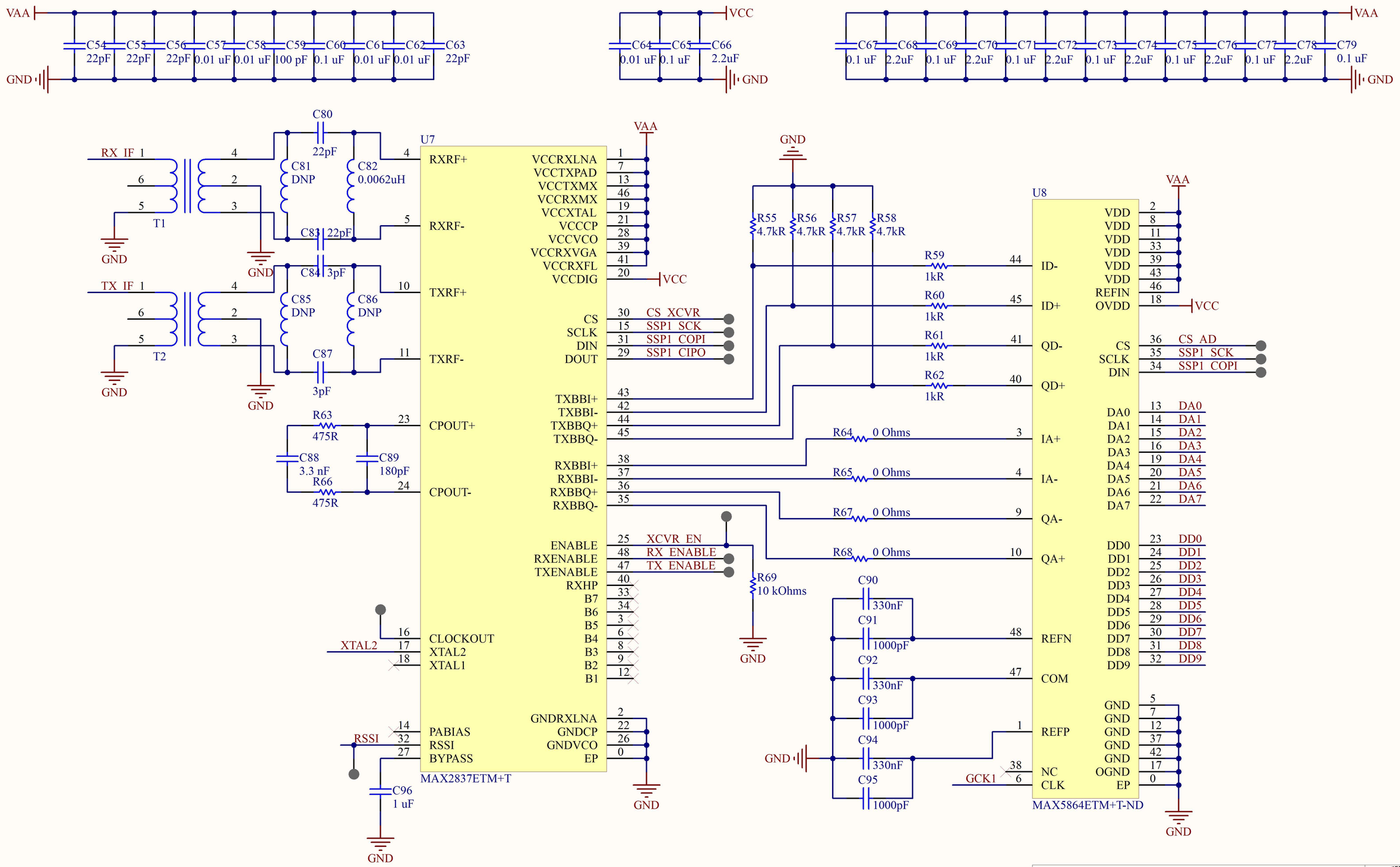

Title	*IQ Front End*	
Size: A4	Number: 5	Revision: 1.0
Date: 7/21/2025 Time: 10:06:56 AM	Sheet 5 of 7	
File: D:\Repository\Beepro\altiumprojects\HackRF\IQFrontEnd.SchDoc		

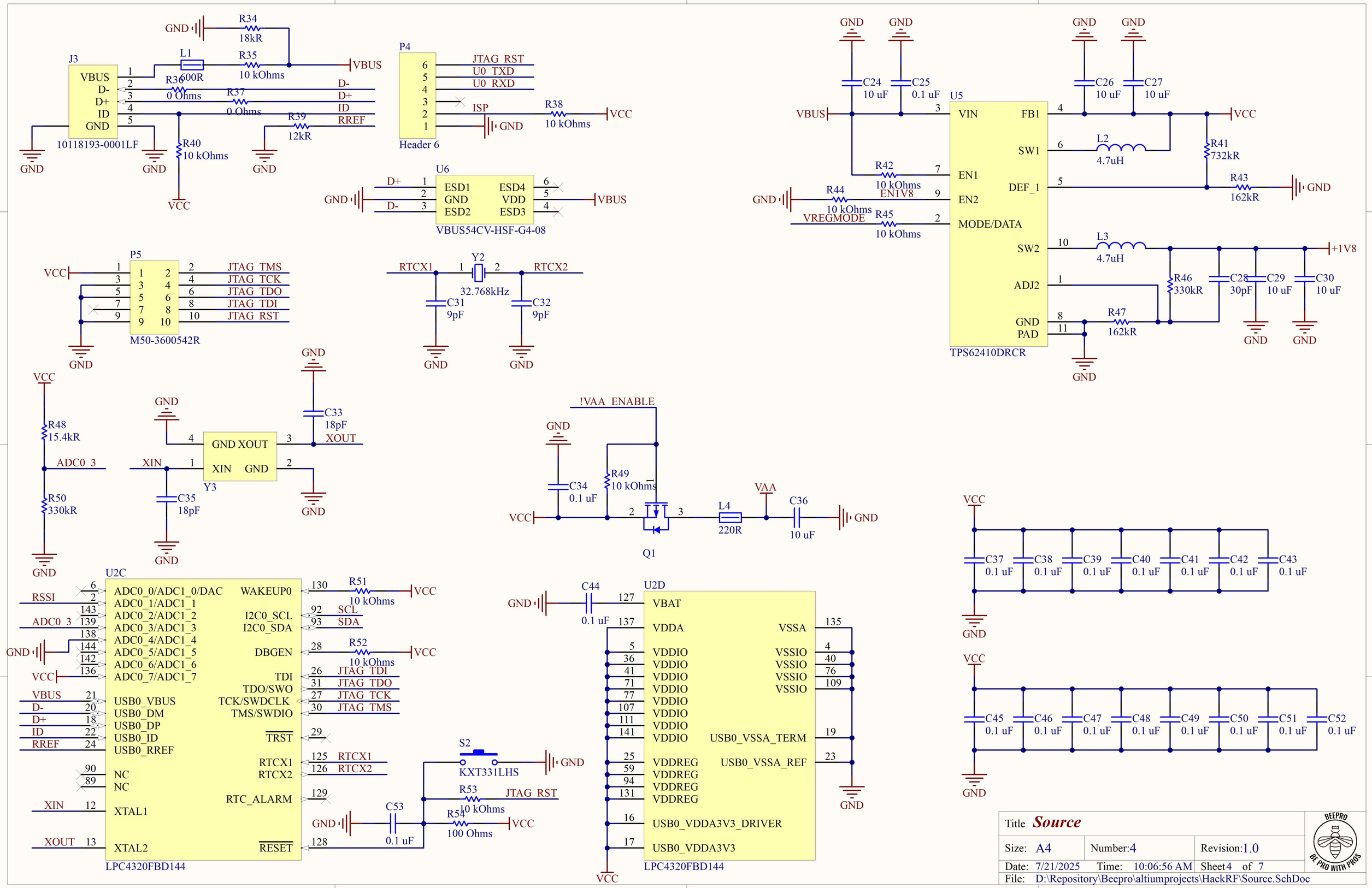

Title	*Source*	
Size: A4	Number:4	Revision:1.0
Date: 7/21/2025	Time: 10:06:56 AM	Sheet 4 of 7
File: D:\Repository\Beepro\altiumprojects\HackRF\Source.SchDoc		

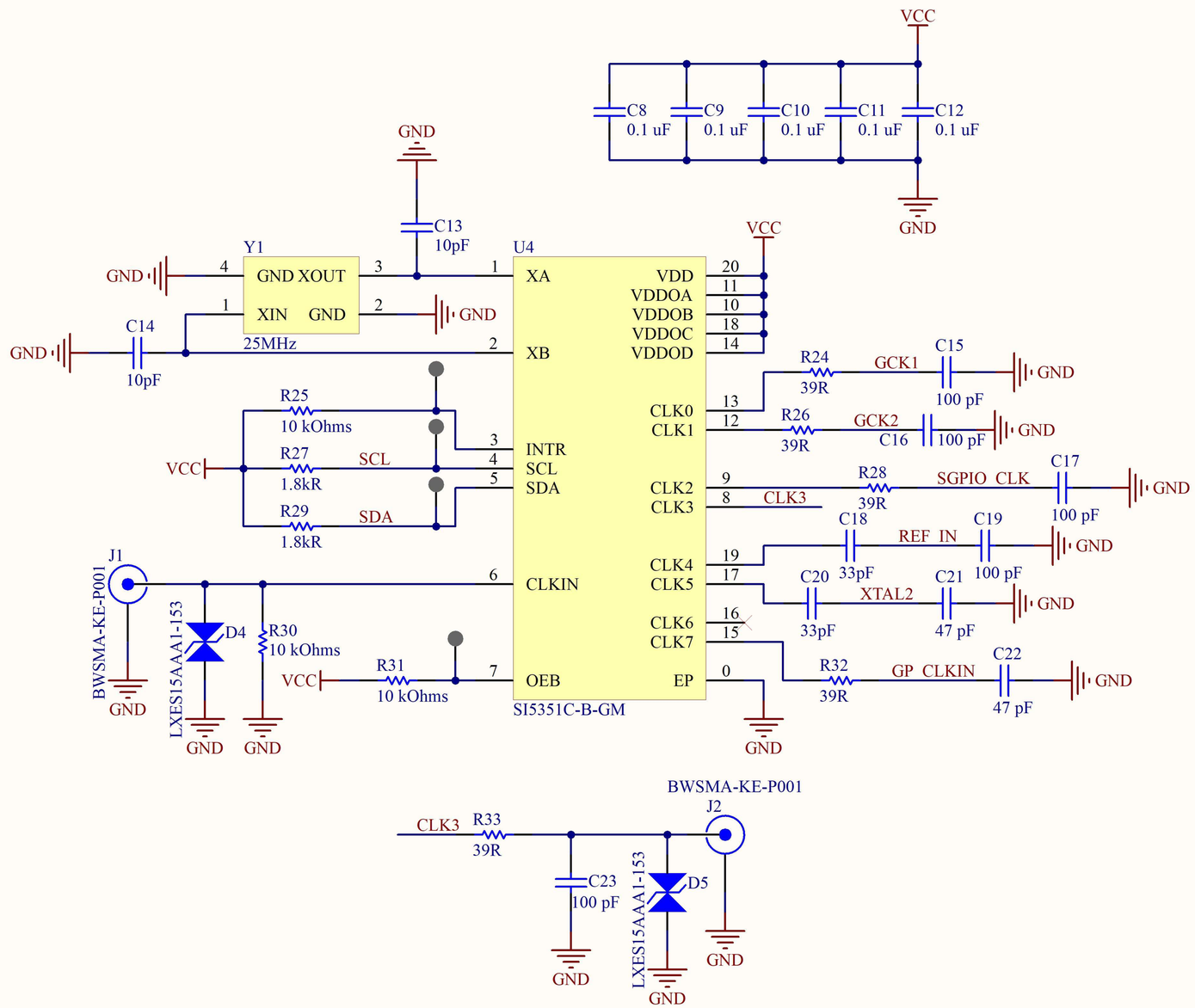

Title	*Clock Generator*		
Size: A4	Number:3	Revision:1.0	
Date: 7/21/2025	Time: 10:06:56 AM	Sheet 3 of 7	
File: D:\Repository\Beepro\altiumprojects\HackRF\ClockGenerator.SchDoc			

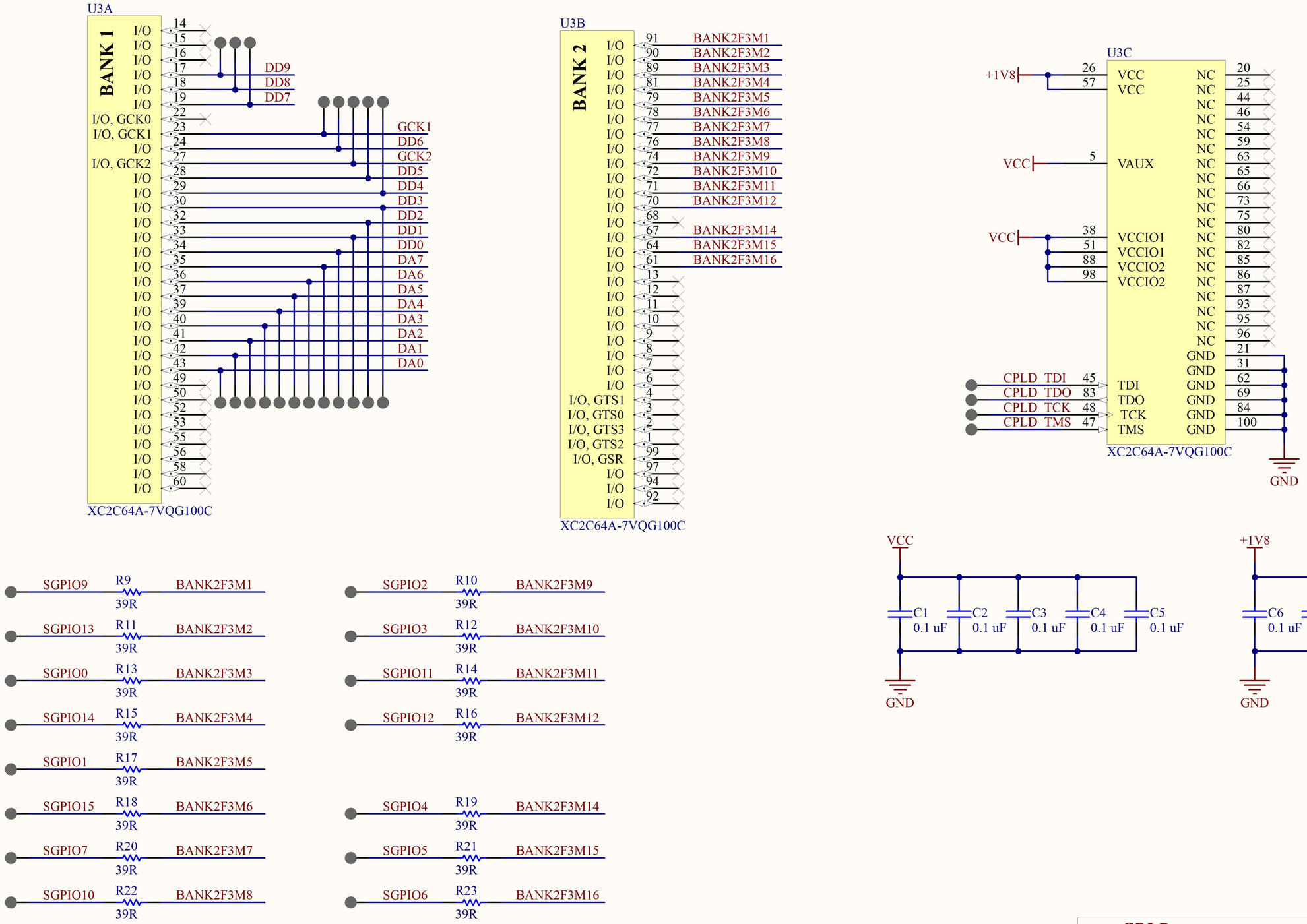

Title *CPLD*		
Size: A4	Number:2	Revision:1.0
Date: 7/21/2025 Time: 10:06:56 AM	Sheet 2 of 7	
File: D:\Repository\Beepro\altiumprojects\HackRF\CPLD.SchDoc		

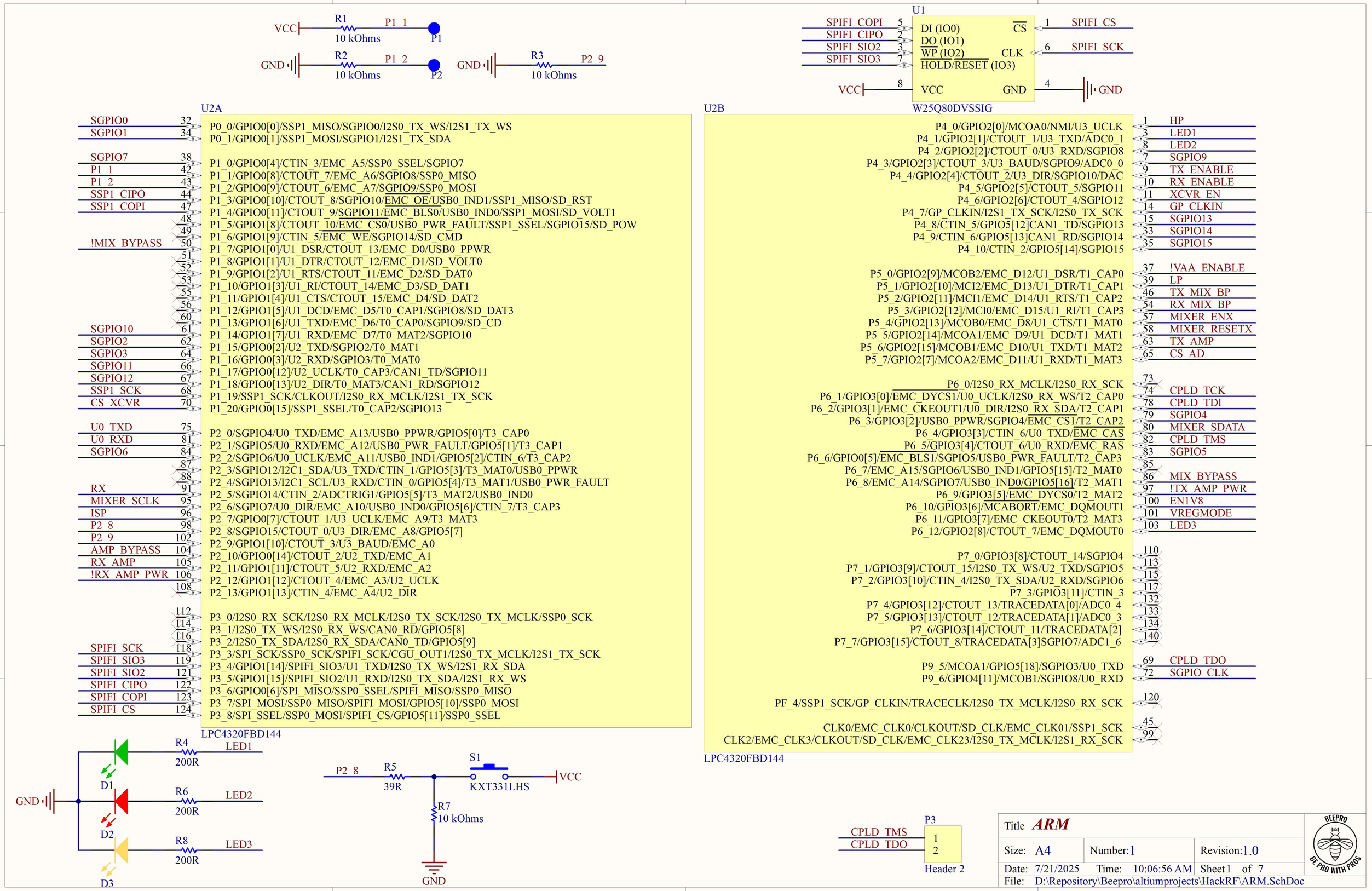

Title *ARM*		
Size: A4	Number: 1	Revision: 1.0
Date: 7/21/2025	Time: 10:06:56 AM	Sheet 1 of 7
File: D:\Repository\Beepro\altiumprojects\HackRF\ARM.SchDoc		