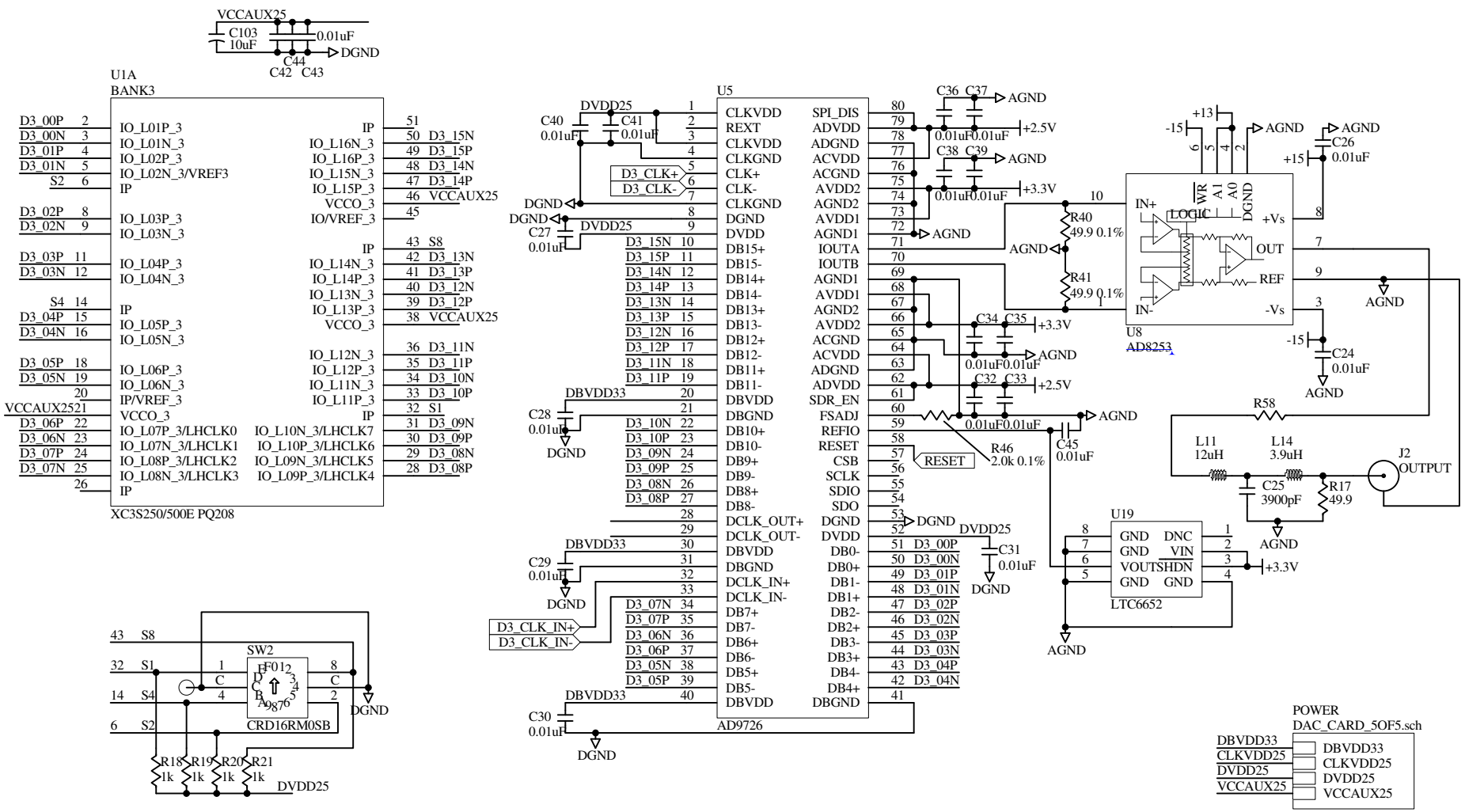

Title		
Size B	Number	Revision
Date: 7-Feb-2011	Sheet of	
File: E:\engineering jobs\..\DAC_CARD_2OF5.sch	Drawn By:	