ME/AER 676 Robot Modeling & Control
Spring 2026

Drive Trains

Hasan A. Poonawala

Department of Mechanical Engineering
University of Kentucky

Email: hasan.poonawala@uky.edu
Web: https://www.engr.uky.edu/~hap

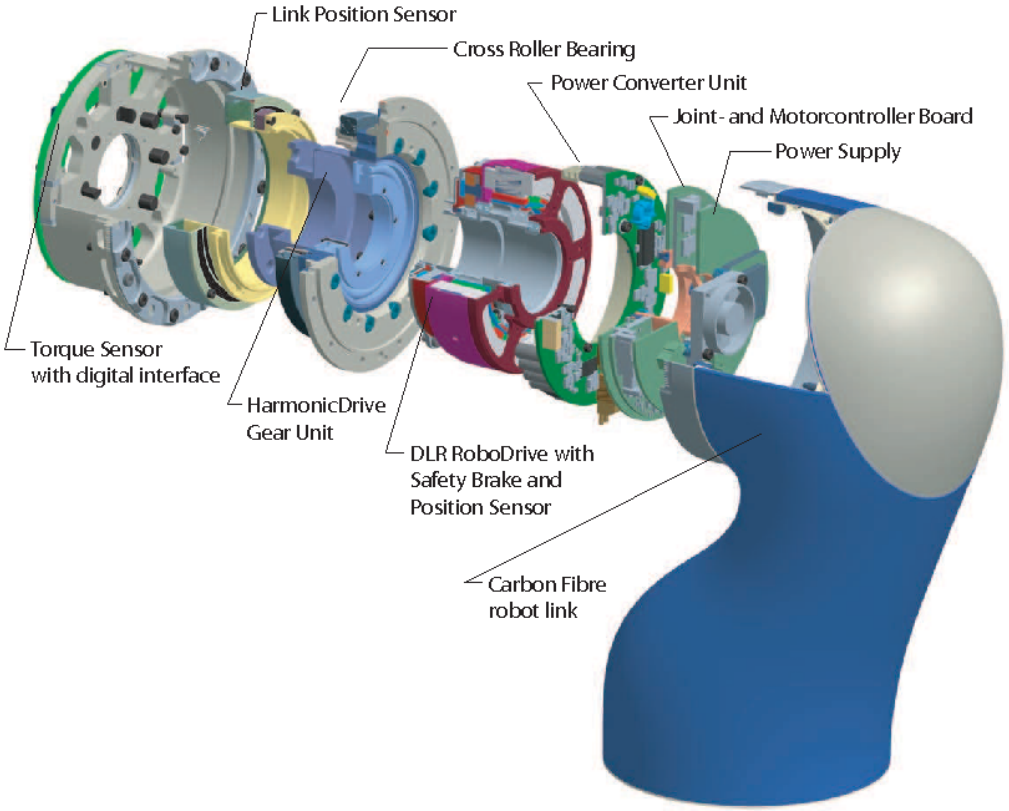
Link Position Sensor
Cross Roller Bearing
Power Converter Unit
Joint- and Motorcontroller Board
Power Supply
Torque Sensor
with digital interface
HarmonicDrive
Gear Unit
DLR RoboDrive with
Safety Brake and
Position Sensor
Carbon Fibre
robot link

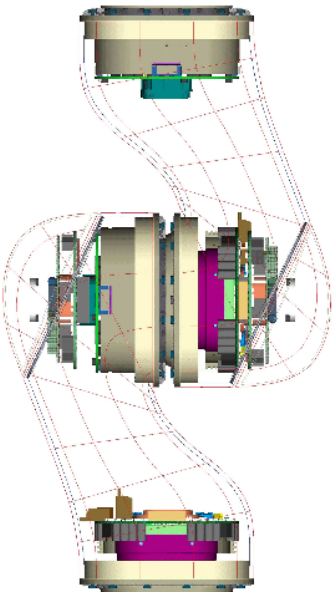

Permanent Magnet DC motors

We consider permanent magnet DC motors. Other kinds include AC motors and brushless DC motors.

A model for the motor torque is $\tau = K_m i_a$, if the flux in the motor is constant. The current is generated by a voltage source, and has dynamics

$$L\frac{d}{dt}i_a + Ri_a = V - V_b, \tag{1}$$

where L is the motor inductance, R is the winding resistance, V_b is the back EMF and is proportional to ω_m, the motor speed.

PMDC Model

The dynamics governing θ_m are

$$J_m\ddot{\theta}_m + B_m\dot{\theta}_m = \tau_m - \tau_l/r \tag{2}$$
$$= K_m i_a - \tau_l/r \tag{3}$$

We can rewrite (1) and (5) as

$$(Ls + R)I_a(s) = V(s) - K_b\ s\Theta_m(s), \tag{4}$$
$$(J_m s^2 + B_m s)\Theta_m(s) = K_m I_a(s) - \tau_l(s)/r \tag{5}$$

We combine these equations to obtain

$$s\left((Ls + R)(J_m s + B_m) + K_b K_m\right)\Theta_m(s) = K_m V(s) - \frac{(Ls + R)}{r}\tau_l(s). \tag{6}$$

Fast Electrical Dynamics

The electrical time constant L/R is much smaller than the mechanical time constant J_m/B_m. So, we can divide by R and set L/R to zero, obtaining.

$$s\left((J_m s + B_m) + \frac{K_b K_m}{R}\right)\Theta_m(s) = \frac{K_m}{R}V(s) - \frac{1}{r}\tau_l(s).$$

Setting $u \leftarrow K_m V/R$, and $B \leftarrow B_m + K_b K_m/R$, we obtain the motor equation as

$$J\ddot{\theta}_m + B\dot{\theta}_m = u(t) - \frac{1}{r}\tau_l. \tag{7}$$

Combined Link-Actuator Model

Let's combine the motor m with the link l

$$J_m\ddot{\theta}_m + B\dot{\theta}_m = u(t) - \frac{1}{r}\tau_l \tag{8}$$

$$J_l\ddot{\theta}_l + B_l\dot{\theta}_l = \tau_l \tag{9}$$

Due to the gears, $\dot{\theta}_m = r\dot{\theta}_l$. We eliminate θ_l to obtain

$$\left(J_m r^2 + J_l\right)\ddot{\theta}_l + \left(Br^2 + B_l\right)\dot{\theta}_l = ru \tag{10}$$

Main takeaway: When gear ratio r is large, then link inertia becomes negligible compared to the motor's inertia.

Full Euler-Lagrangian Model

$$D(q)\ddot{q} + C(q,\dot{q})\dot{q} + G(q) = \tau + \tau_{friction} + \tau_e,$$

becomes

$$\underbrace{M(q)}_{+\text{motor inertia}} \ddot{q} + C(q,\dot{q})\dot{q} + \underbrace{B\dot{q}}_{+\text{motor friction}} + G(q) = u + \tau_e,$$

where u denotes the input due to the voltage, whereas τ was the torque acting on the link joint.

Full Euler-Lagrangian Model

$$D(q)\ddot{q} + C(q,\dot{q})\dot{q} + G(q) = \tau + \tau_{friction} + \tau_e,$$

becomes

$$\underbrace{M(q)}_{+\text{motor inertia}} \ddot{q} + C(q,\dot{q})\dot{q} + \underbrace{B\dot{q}}_{+\text{motor friction}} + G(q) = u + \tau_e,$$

where u denotes the input due to the voltage, whereas τ was the torque acting on the link joint. In particular,

$$u_k = r_k \frac{K_{m_k}}{R_k} V_k,$$

where $\theta_{m_k} = r_k q_k$, and $M(q) = D(q) + J$, and J is diagonal with $r_k^2 J_{m_k}$ as k^{th} diagonal element.

Implications of PMDC Motors

- The gear ratio is high ($\approx$20 - 200), J dominates $D(q)$ and other terms

Implications of PMDC Motors

- The gear ratio is high ($\approx$20 - 200),
  J dominates $D(q)$ and other terms
  - $\implies$ $M(q) \approx$ diagonal, dynamics of links nearly independent

Implications of PMDC Motors

- The gear ratio is high ($\approx$20 - 200),
  J dominates $D(q)$ and other terms
  - $\implies$ $M(q) \approx$ diagonal, dynamics of links nearly independent
- High gear ratios are good for position control

Implications of PMDC Motors

- The gear ratio is high ($\approx$20 - 200),
  J dominates $D(q)$ and other terms
  - $\implies$ $M(q) \approx$ diagonal, dynamics of links nearly independent
- High gear ratios are good for position control
- They amplify nonlinear motor friction, introduce friction

Implications of PMDC Motors

- The gear ratio is high ($\approx$20 - 200), J dominates $D(q)$ and other terms
  - $\implies M(q) \approx$ diagonal, dynamics of links nearly independent
- High gear ratios are good for position control
- They amplify nonlinear motor friction, introduce friction
  - the relationship $\tau = K\ I = KV/R$ breaks down (cannot set torque without feedback)

Implications of PMDC Motors

- The gear ratio is high (≈20 - 200), J dominates $D(q)$ and other terms
  - $\implies M(q) \approx$ diagonal, dynamics of links nearly independent
- High gear ratios are good for position control
- They amplify nonlinear motor friction, introduce friction
  - the relationship $\tau = K\ I = KV/R$ breaks down (cannot set torque without feedback)
- In dynamic robots, preference for Direct-Drive and Quasi-Direct-Drive motors ($r \approx 1$)

Implications of PMDC Motors

- The gear ratio is high (≈20 - 200), J dominates $D(q)$ and other terms
  - $\implies M(q) \approx$ diagonal, dynamics of links nearly independent
- High gear ratios are good for position control
- They amplify nonlinear motor friction, introduce friction
  - the relationship $\tau = K\ I = KV/R$ breaks down (cannot set torque without feedback)
- In dynamic robots, preference for Direct-Drive and Quasi-Direct-Drive motors ($r \approx 1$)
  - Brushless, QDD Motors, instrumental in 4-legged bots

Implications of PMDC Motors

- The gear ratio is high ($\approx$20 - 200), J dominates $D(q)$ and other terms
  - $\implies M(q) \approx$ diagonal, dynamics of links nearly independent
- High gear ratios are good for position control
- They amplify nonlinear motor friction, introduce friction
  - the relationship $\tau = K\ I = KV/R$ breaks down (cannot set torque without feedback)
- In dynamic robots, preference for Direct-Drive and Quasi-Direct-Drive motors ($r \approx 1$)
  - Brushless, QDD Motors, instrumental in 4-legged bots
- Boston Dynamics' Atlas robot uses hydraulic actuation