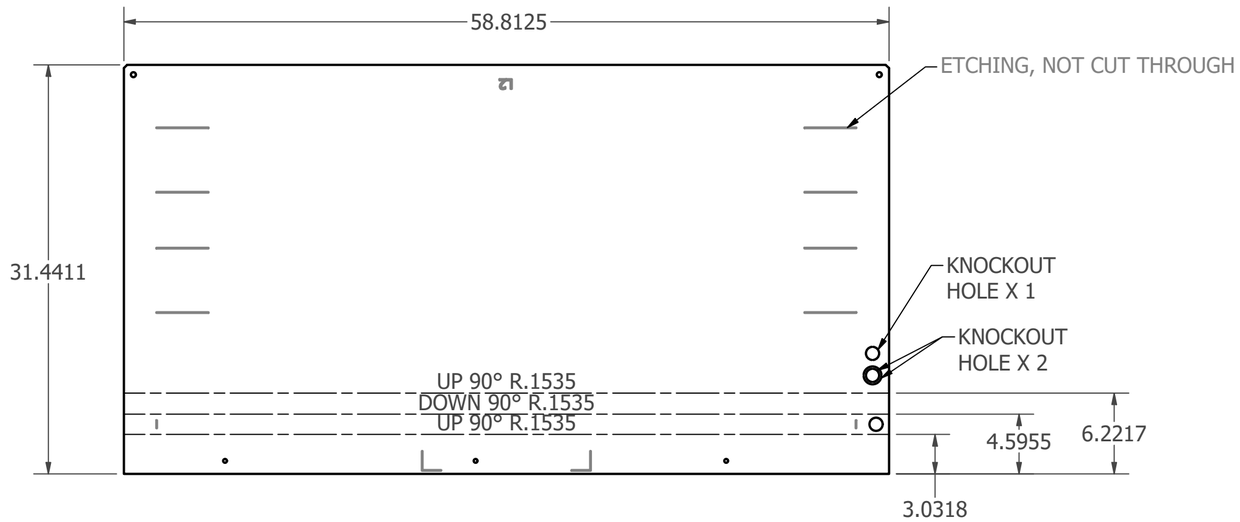

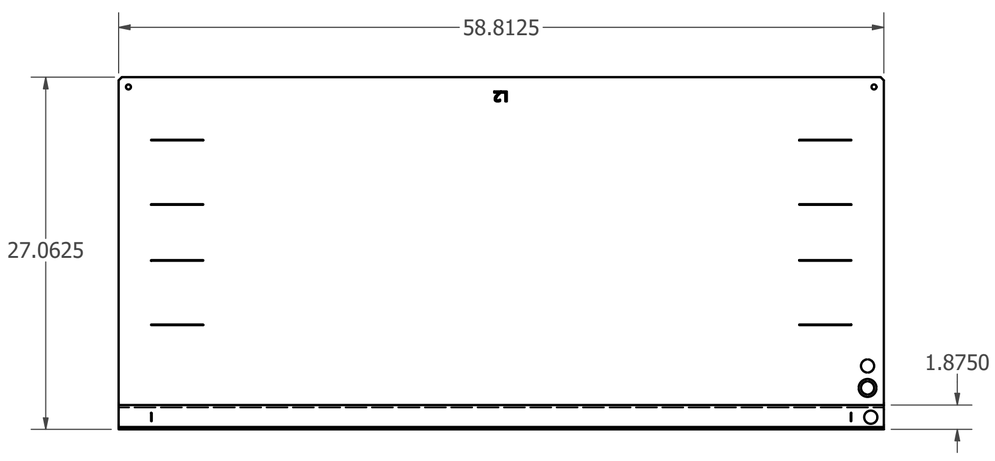

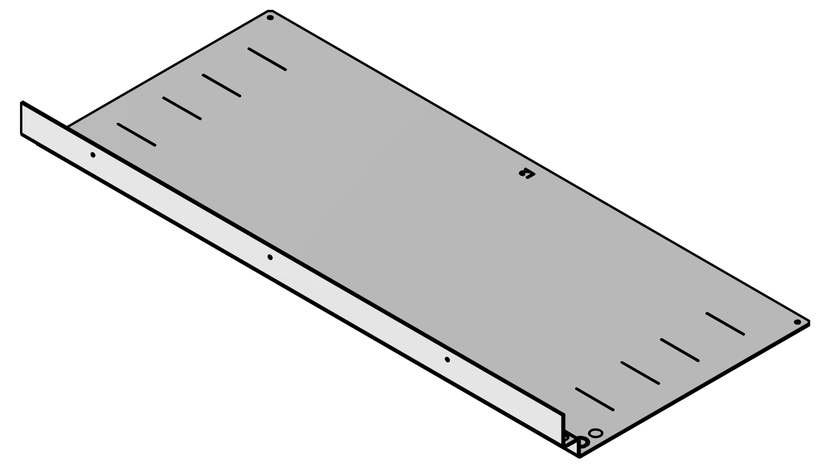

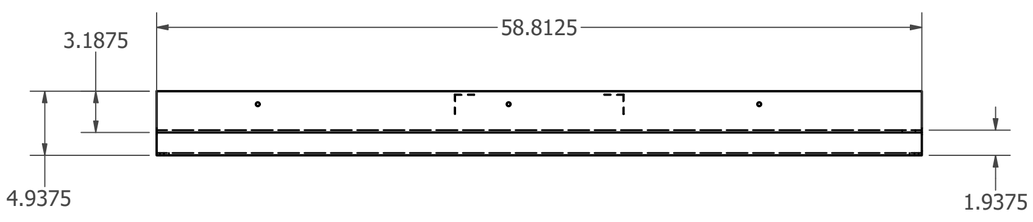

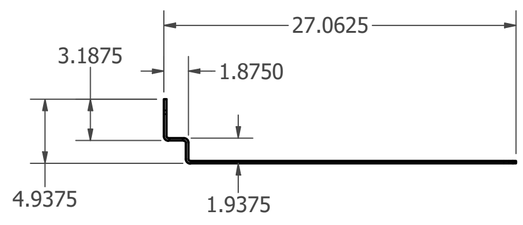

UNLESS OTHERWISE SPECIFIED:

TOLERANCES:
INCHES +/- 0.063
ANGLES +/- 1°

DRAWN	Alen	2025-11-21
CHECKED	Alay	2025-11-21
QTY	As per BOM	
MATERIAL	Aluminum 5052 H32	
GAUGE	0.188 in	
LAST UPDATE		

BATTLESHIELD

TITLE: COMPARTMENT FLOOR, L2

SIZE	DWG NO	REV
C	F54525-B-10	

SCALE 1/9 SHEET 1 OF 1