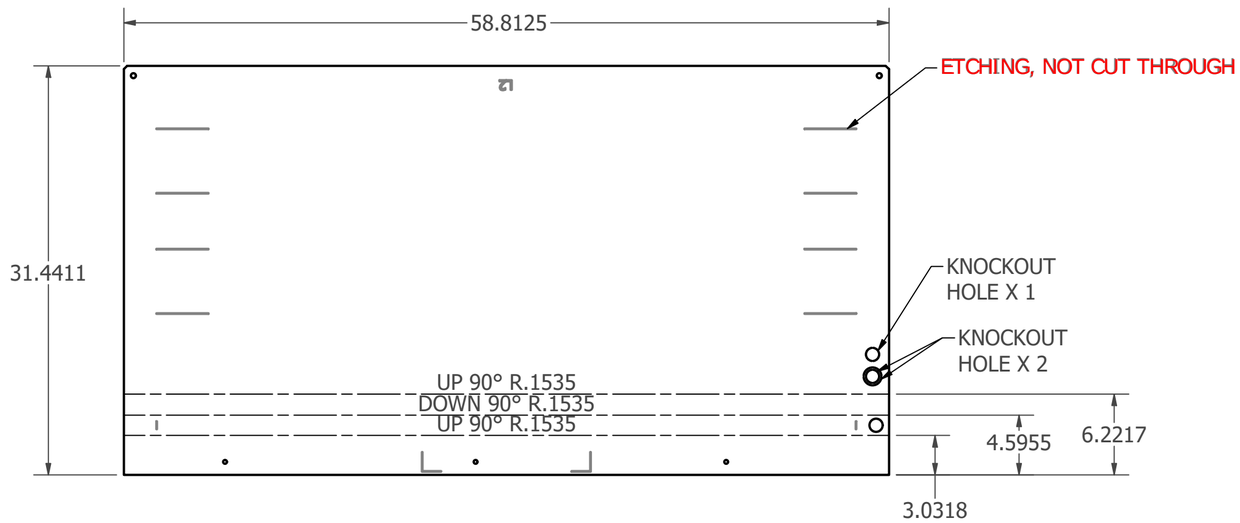

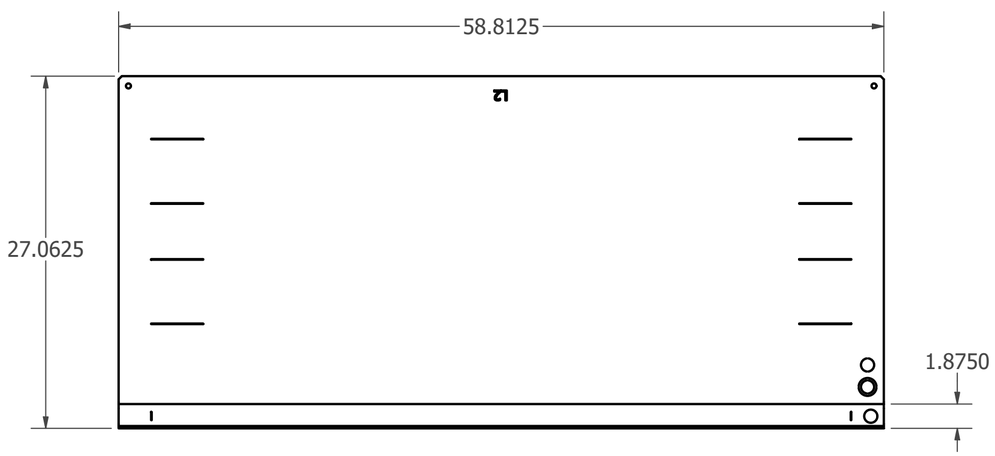

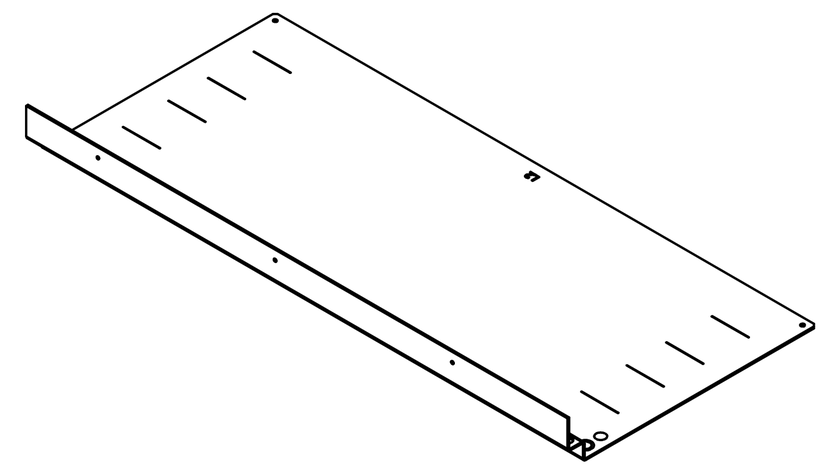

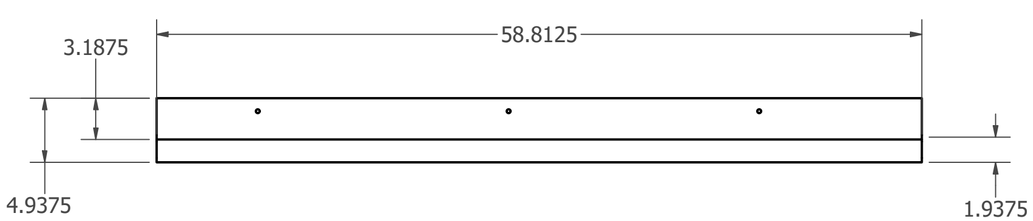

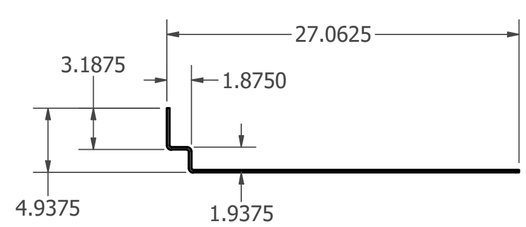

UNLESS OTHERWISE SPECIFIED:

TOLERANCES:
INCHES +/- 0.063
ANGLES +/- 1°

DRAWN Alen	2025-11-21	
CHECKED Alay	2025-11-21	
QTY As per BOM		TITLE COMPARTMENT FLOOR, L2
MATERIAL Aluminum 5052 H32		
GAUGE 0.188 in		
LAST UPDATE		SIZE C / DWG NO F54525-B-10 / REV
		SCALE 1/9 / SHEET 1 OF 1