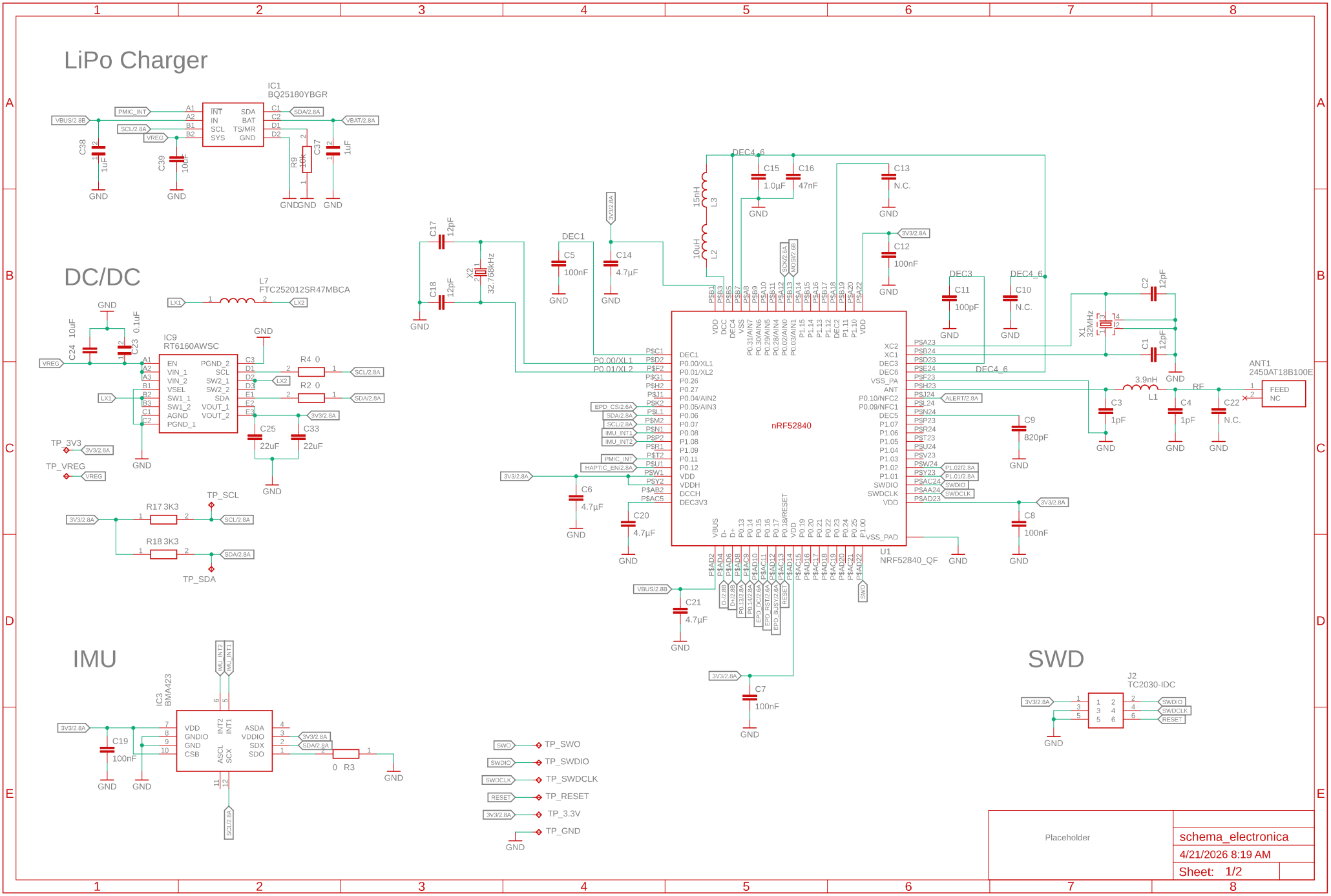

4/21/2026 11:54 AM f=0.70 (Sheet:)

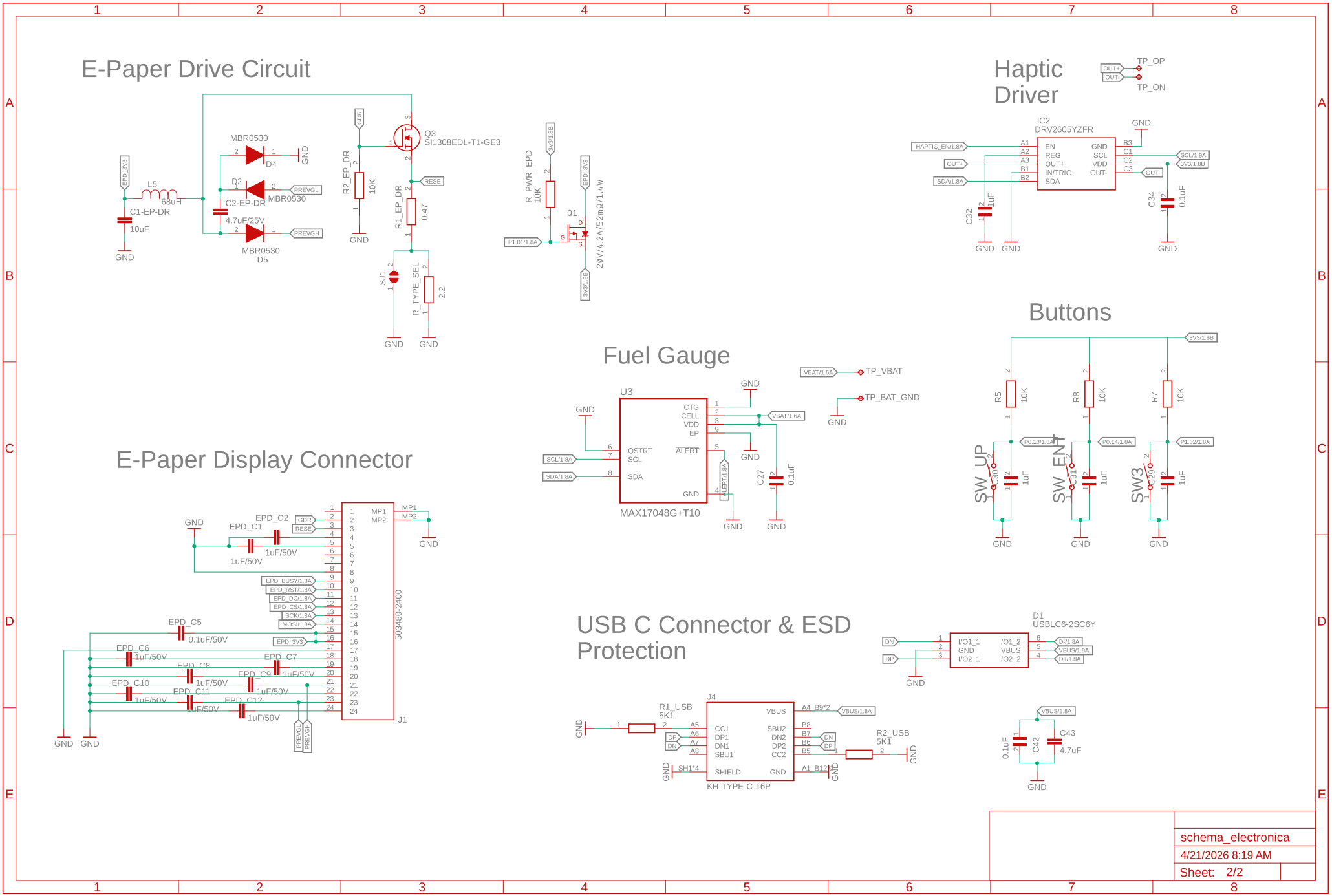

schema_electronica
4/21/2026 8:19 AM
Sheet: 2/2

4/21/2026 11:54 AM f=0.70 (Sheet:)