Francesco Camporeale
20050823-1537

ID2218 Design of Fault-Tolerant Systems
Assignment 1, 9 points

This assignment contains 11 multiple-choice questions, in which only **one** choice is correct. Put a circle around the letter (a, b, c, d) corresponding to the right answer. Summarize your answers in the table below.

1	2	3	4	5	6	7	8	9	10	11
c	c	b	d	b	c	c	d	a	c	d

1. **(0.5 point)** Who pioneered the idea of incorporating redundancy into a system in order to improve its reliability?

   (a) George Boole
   (b) Claude Shannon
   (c) John von Neumann
   (d) Isaac Newton

2. **(0.5 point)** Which of the following definitions is NOT correct?

   (a) Dependability is the ability of a system to deliver its intended level of service to its users.
   (b) Reliability $R(t)$ of a system at time t is the probability that the system operates without a failure in the interval $[0,t]$, given that the system was performing correctly at time 0.
   (c) Availability $A(t)$ of a system at time t is the probability that the system is functioning correctly in the interval $[0,t]$, given that the system was operating correctly at time 0.
   (d) Safety $S(t)$ of a system at time t is the probability that the system either performs its function correctly or discontinues its operation in a fail-safe manner in the interval $[0,t]$, given that the system was operating correctly at time 0.

3. **(0.5 point)** Compute the downtime per year for the steady-state availability $A(\infty) = 99.99\%$.

   (a) 29 min
   (b) 52 min
   (c) 46 sec
   (d) 43 min

4. **(0.5 point)** A telecom system has less than 1 min per year downtime. What is its steady-state availability?.

(a) 0.999988096

(b) 0.999898095

(c) 0.999996891

(d) 0.999998097

5. (**1 point**) Can the circuit shown below be simplified to a simpler circuit which implements the same Boolean function as the original circuit?

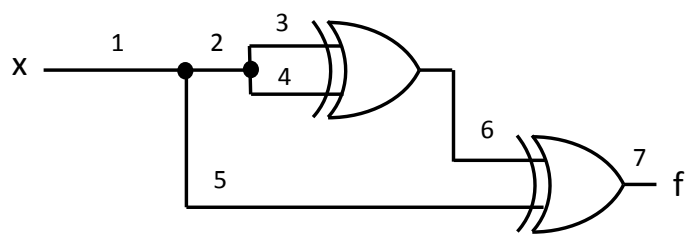

(a) No

(b) Yes, $f(x) = x$.

(c) Yes, $f(x) = \overline{x}$, where $\overline{x}$ is the Boolean complement (NOT) of x.

(d) Yes, $f(x) = x + 1$, where "+" is the Boolean OR.

6. (**1 point**) Consider the previous circuit in task 5. Which of its lines has an undetectable stuck-at-0 fault?

(a) line 1

(b) line 5

(c) line 6

(d) line 7

7. (**1 point**) Consider the circuit shown below. Which of the listed input assignments is the test for the stuck-at-0 fault at line 7?

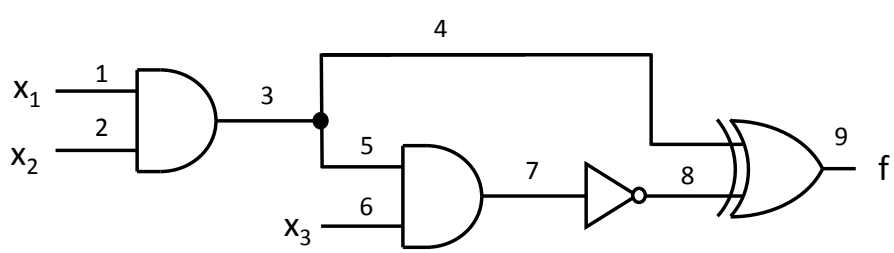

(a) $(x_1, x_2, x_3) = (0, 0, 0)$

(b) $(x_1, x_2, x_3) = (1, 0, 1)$

(c) $(x_1, x_2, x_3) = (1, 1, 1)$
(d) $(x_1, x_2, x_3) = (0, 1, 0)$

8. **(2 points)** Consider the circuit in task 7. Which of the test sets listed below represents all possible tests for the stuck-at-1 fault at line 7? The tests are listed in the order (x_1, x_2, x_3).

   (a) $(1,1,0), (0,1,1), (1,0,1)$
   (b) $(0,0,0), (1,0,0), (0,1,0), (0,0,1)$
   (c) $(1,0,0), (0,1,0), (0,0,1)$
   (d) all but $(1,1,1)$

9. **(0.5 points)** Which of the following definitions is NOT correct?

   (a) Redundancy is a necessary and sufficient condition for fault tolerance.
   (b) Fault prevention is a set of techniques attempting to prevent the introduction or occurrence of faults in the system in the first place.
   (c) Fault removal is a set of techniques targeting the reduction of the number of faults which are present in the system.
   (d) Fault forecasting is a set of techniques aiming to estimate how many faults are present in the system, possible future occurrences of faults, and the consequences of faults.

10. **(0.5 points)** Which of the following systems has availability as the most important attribute (as opposed to reliability and safety)?

    (a) Spacecraft
    (b) Heart pace maker
    (c) ATM machine
    (d) Nuclear power station

11. **(1 point)** Which of the test sets listed below is a minimal complete test set for single stuck-at faults in a 3-input OR gate?

    (a) $\{(000), (111)\}$
    (b) $\{(100), (010), (001), (111)\}$
    (c) $\{(110), (011), (101), (000)\}$
    (d) $\{(100), (010), (001), (000)\}$

KUNGL TEKNISKA HÖGSKOLAN

International Master Program in System-on-Chip Design

Hardware redundancy

Techniques for fault tolerance

- Fault masking “hides” faults that occur. Do not require detecting faults, but require containment of faults (the effect of all faults should be local)
- Another approach is to first to detect, locate and contain faults, and then to recover from faults using reconfiguration

Redundancy

- hardware redundancy
  - 2nd CPU, 2nd ALU, ...
- software redundancy
  - validation test...
- information redundancy
  - error-detecting and correcting codes, ...
- time redundancy
  - repeating tasks several times, ...

Example

- FT digital filter
  - acceptance test [0 - 255]
    - SW: detect overflow
    - HW: memory for test
    - time: to execute test

Redundancy

- NOTHING FOR FREE!
- Redundancy increases costs
  - HW: weight, size, power consumption, ...
  - SW: development costs, ...
  - information: extra HW to code / decode
  - time: faster CPUs, components
- But better dependability may reduce cost of preventive maintenance

Types of redundancy

- hardware redundancy
- information redundancy
- software redundancy
- time redundancy

HW redundancy: overview

- passive redundancy techniques
  - fault masking
- active redundancy techniques
  - detection, localisation, containment, recovery
- hybrid redundancy techniques
  - static + dynamic
  - fault masking + reconfiguration

Passive HW redundancy

Triple Modular Redundancy (TMR)

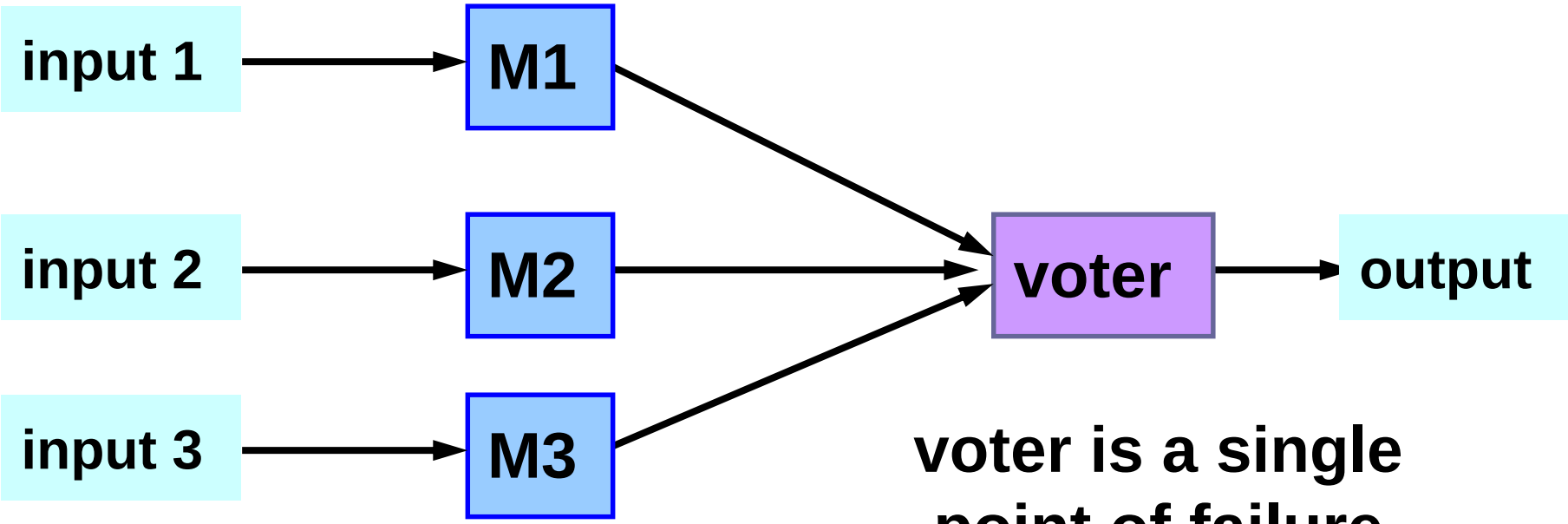

voter is a single point of failure

Passive HW redundancy

Triple Modular Redundancy (TMR)

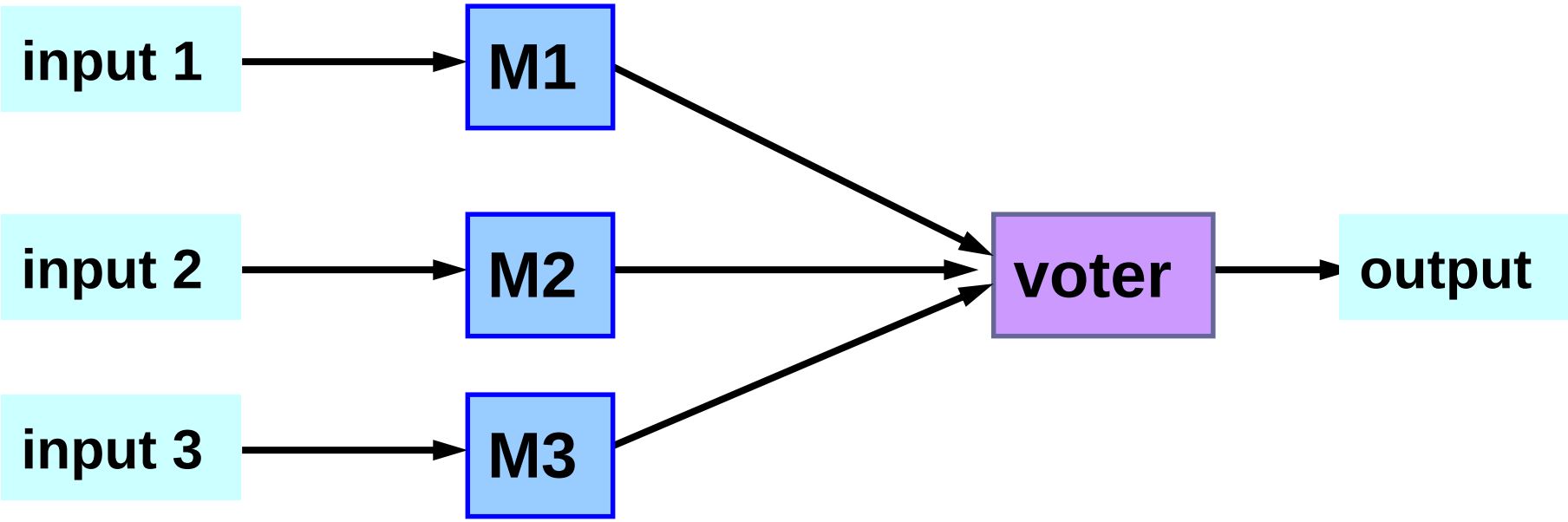

Triple Modular Redundancy (TMR)

- Structure:
  - 3 active components
  - fault masking by voter
- Fault-tolerance abilities:
  - Masks one module fault
- Problem:
  - voter is a single point of failure

Passive HW redundancy

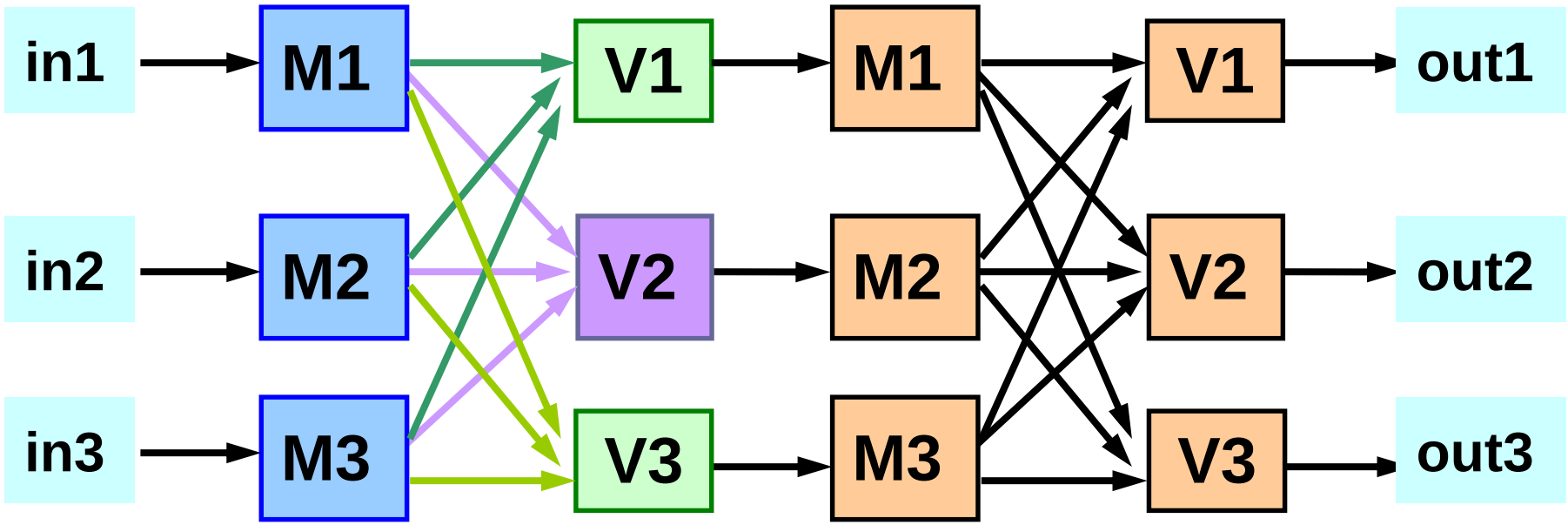

restoring organ

Primary Flight Computers (PFC) Architecture of Boeing 777

Source: talk of Saurabh Chheda

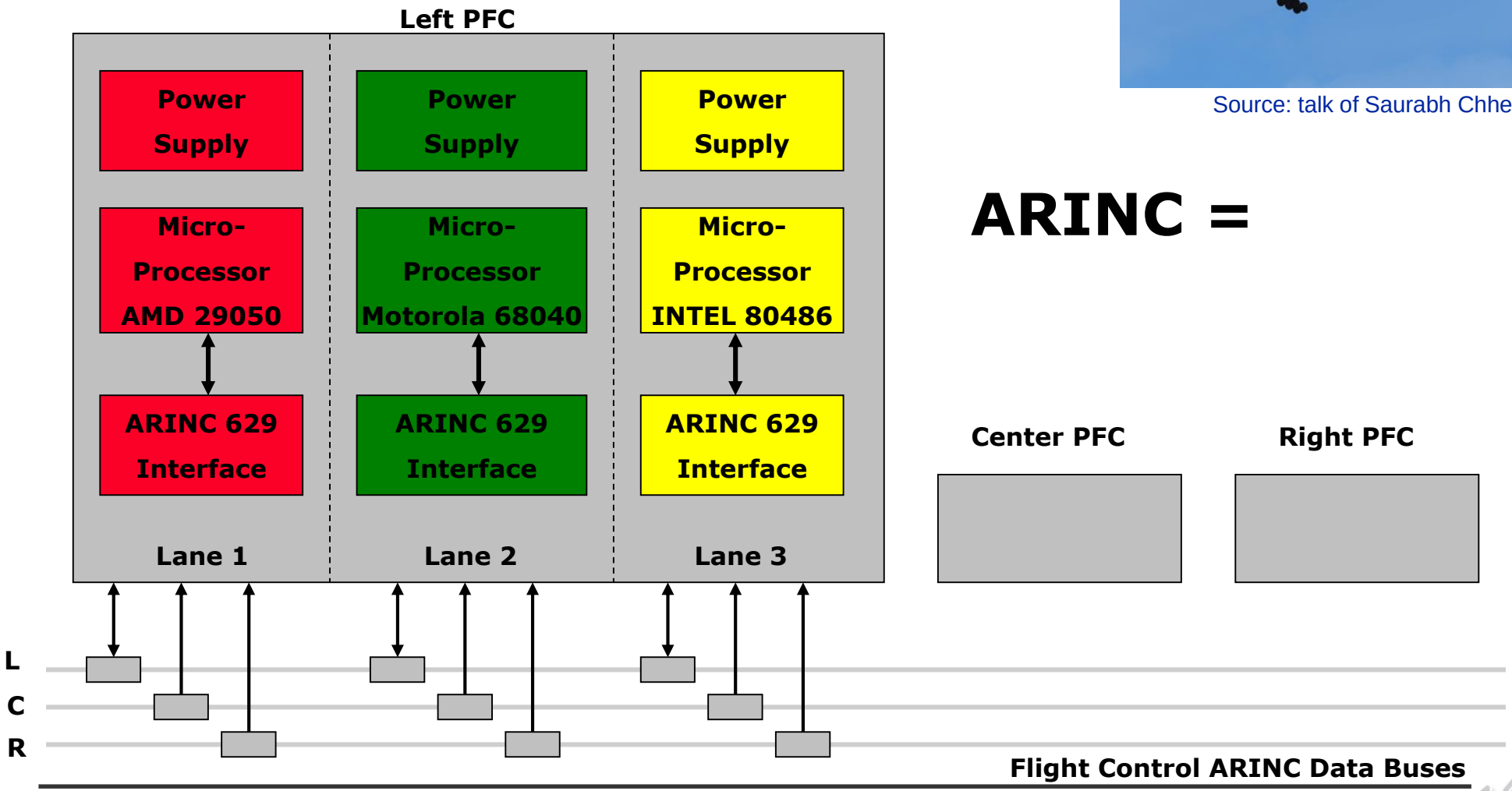

ARINC =

TMR reliability evaluation: perfect voter

- TMR operates correct if at least 2 modules operate correctly

$$R_{TMR} = R_1R_2R_3+(1-R_1)R_2R_3+R_1(1-R_2)R_3+R_1R_2(1-R_3)$$

- If $R_1 = R_2 = R_3$, then

$$R_{TMR} = 3R^2 – 2R^3$$

TMR vs non-redundant system reliability

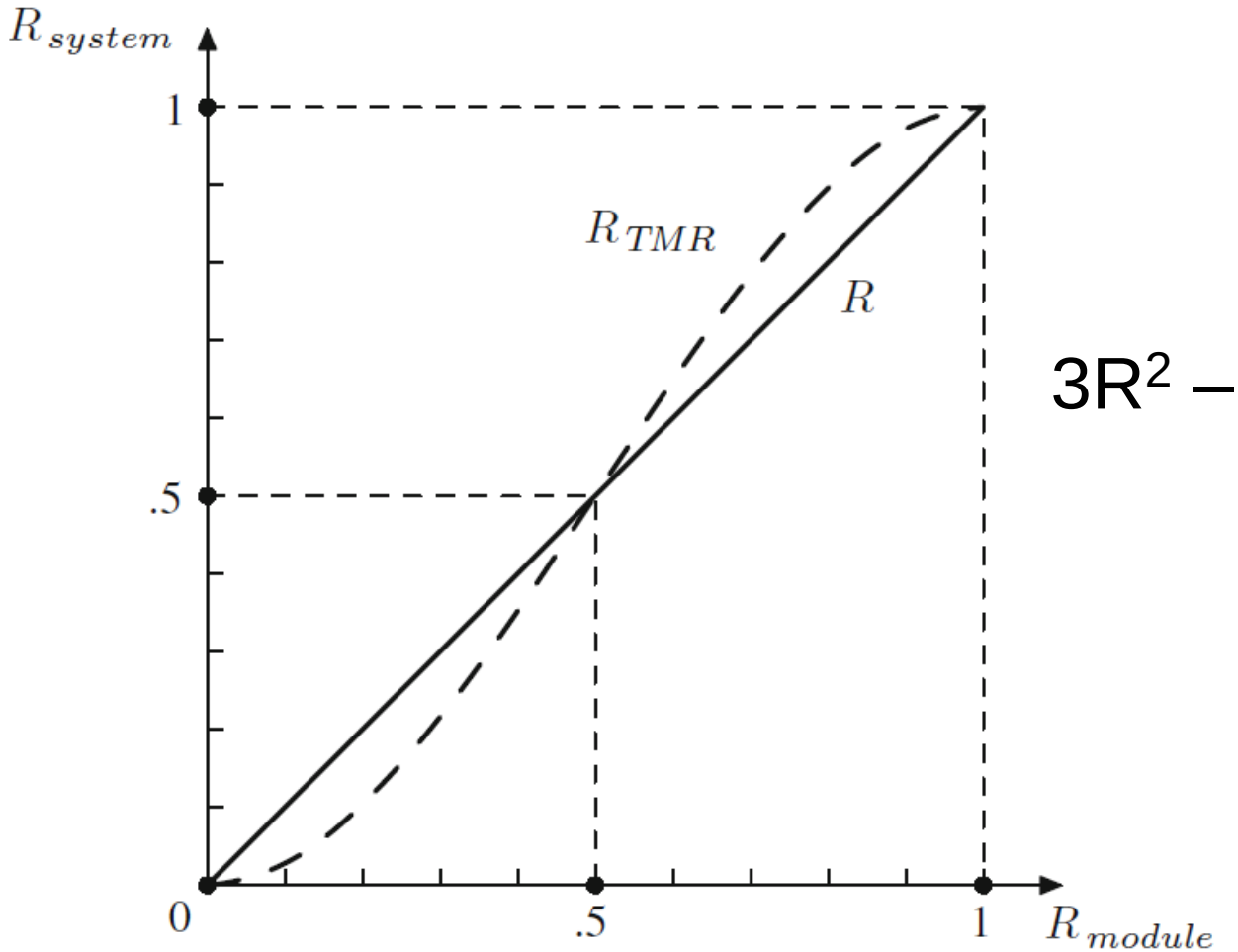

$3R^2 - 2R^3 = R$

TMR reliability as a function of time

- For a constant failure rate, we get

$$R_{TMR}(t) = 3e^{-2\lambda t} - 2e^{-3\lambda t}$$

TMR reliability as a function of λt

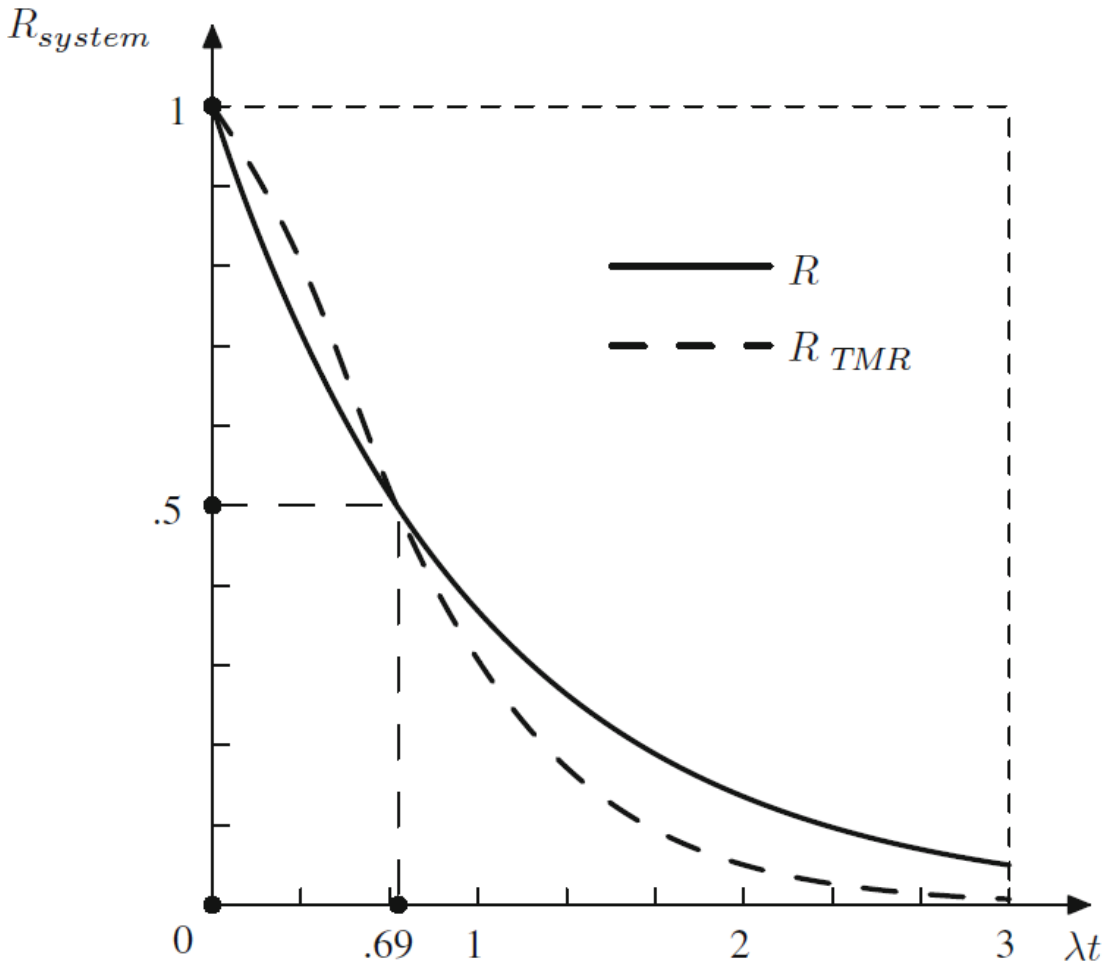

Non-perfect voter

- Since voter is in series

$$R_{TMR} = (3R^2 - 2R^3)\, R_v$$

- To make the system reliability higher than the one of non-renundant module

$$(3R^2 - 2R^3)\, R_v > R$$

$$R_v > 1/(3R^2 - 2R^3) \qquad (1)$$

- The minimal vaule satisfying (1) is $R_v = 0.889$, computed for $R = 0.75$

Passive HW redundancy

- N-modular redundancy (NMR)
  - N active components
  - N odd, for majority voting
  - tolerates $\lfloor N/2 \rfloor$ module faults

- Example: Apollo spacecraft
  - N = 5
  - 2 faults can be tolerated (masked)

HW voting

hardware realisation of 1-bit majority voter

f = ab + ac + bc

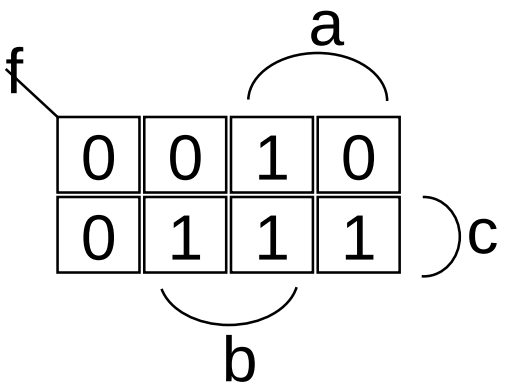

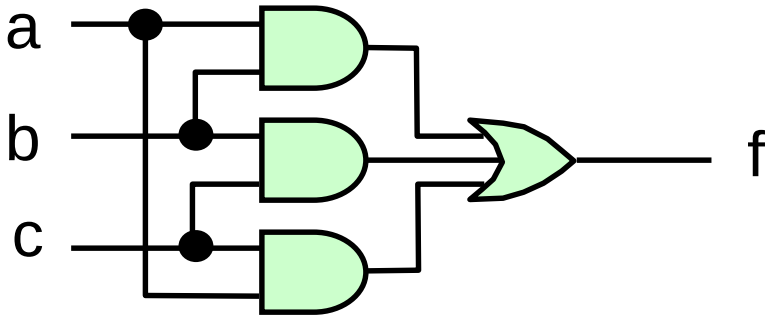

n-bit majority voter: n times 1-bit

requires 2 gate delays

SW voting

- Voting can be performed using software
- Voter in software implemented by a microprocessor
- Voting program can be as simple as a sequence of three comparisons, with the outcome of the vote being the value that agrees with at least one of the other two

HW vs. SW Voting

- HW: fast, but expensive
  - 32-bit voter: 128 gates and 256 flip-flops
  - 1 TMR level = 3 voters

- SW: slow, but more flexible
  - use existing CPUs

Problem with voting

- Major problem with practical application of voting is that the three results may not completely agree
  - sensors, used in many control systems, can seldom be manufactured so that their values agree exactly
  - analog-to-digital converter can produce quantities that disagree in the least significant bits

Problems with voting

1. When values that disagree slightly are processed, the disagreement can grow larger
   - small difference in inputs can produce large differences in outputs
2. A single result must ultimately be produced
   - potential point where one failure can cause a system failure

How to solve problem 1

- Mid-value select technique
  - choose a value from the three which lies between the other two

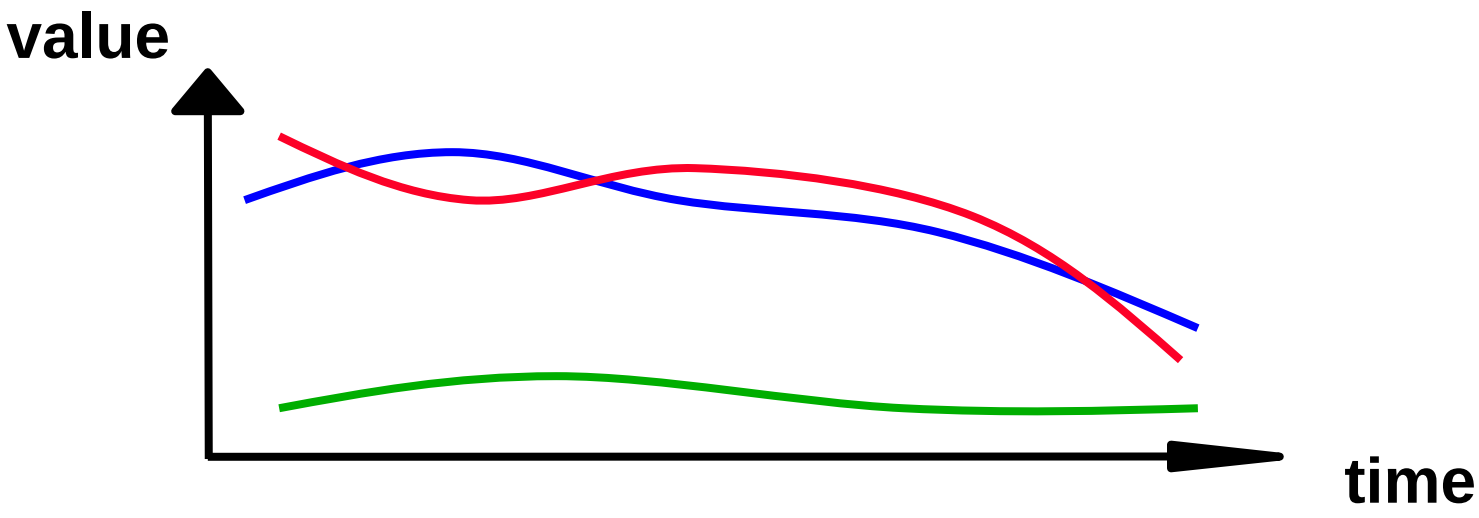

How to cure problem 1

- Ignore the least-significant bits of data
  - disagreement which occurs only in the least-significant bits is acceptable
  - disagreement which affects the most-significant bits is not acceptable and must be corrected

Types of HW redundancy

- static techniques (passive)
  - fault masking
- dynamic techniques (active)
  - detection, localisation, containment and recovery
- hybrid techniques
  - static + dynamic
  - fault masking + reconfiguration

Active HW redundancy

- dynamic redundancy
  - actions required for correct result
    - detection, localization, containment, recovery
    - no fault masking
  - does not attempt to prevent faults from producing errors within the system

Active HW redundancy

- most common in applications that can tolerate temporary erroneous results
  - satellite systems - preferable to have temporary failures that high degree of redundancy
- types of active redundancy:
  - duplication with comparison
  - standby sparing
  - pair-and-a-spare
  - watchdog timer

Duplication with comparison

- Two identical modules perform the same computation in parallel and their results are compared

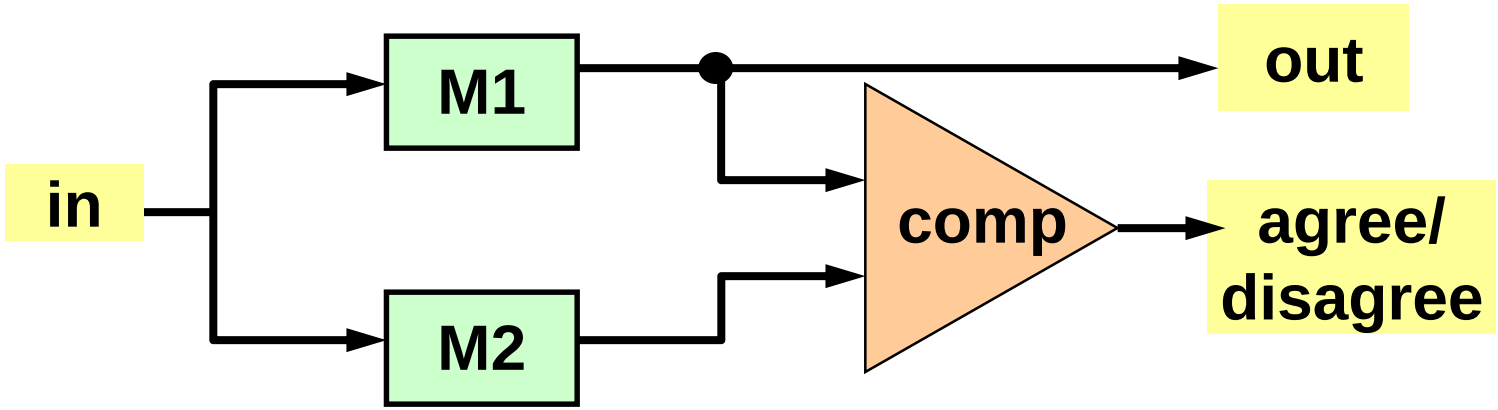

Duplication with comparison

- The duplication concept can only detect faults, not tolerate them
  - there is no way to determine which module is faulty

Duplication with comparison

- Problems:
  - if there is a fault on input line, both modules will receive the same erroneous signal and produce the erroneous result
  - comparator may not be able to perform an exact comparison
    - synchronisation
    - no exact matching
  - comparator is a single point of failure

Implementation of comparator

- In hardware, a bit-by-bit comparison can be done using two-input exclusive-or gates
- In software, a comparison can be implemented by a COMPARE instruction
  - commonly found in instruction sets of almost all microprocessors

Reliability evaluation, perfect comparator

- Duplication with comparison operates correctly unitil both modules operate correctly

$$R_{DC} = R_1 R_2$$

where R_1 and R_2 are reliabilities of modlues

Duplication with comparison vs non-redundant system reliability

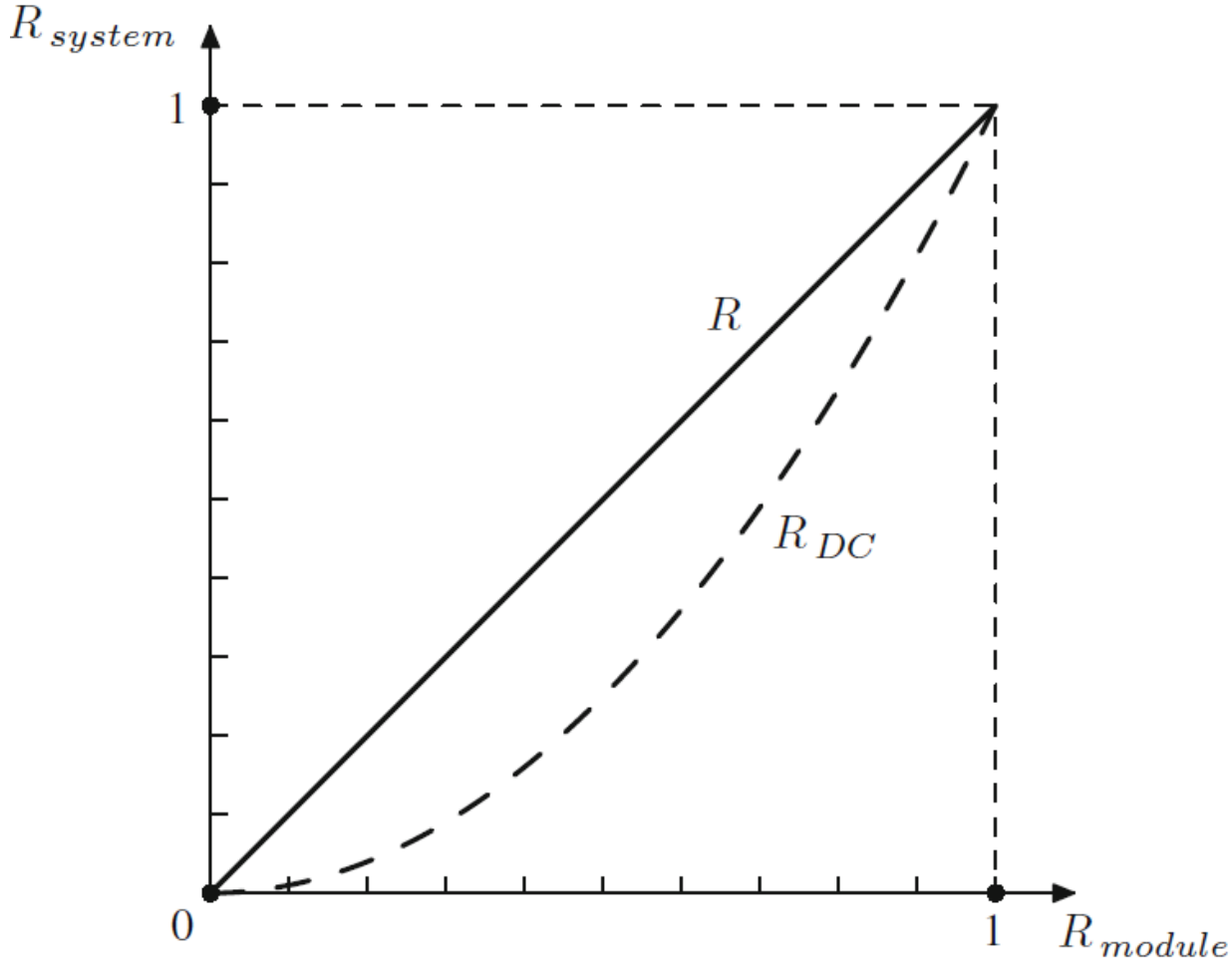

Standby redundancy

- One module is operational and one or more serve as stand-bys, or spares
- Error detection is used to determine when a module became faulty
- Error location is used to determine which module is faulty
- Faulty module is removed from operation and replaced with a spare

Standby redundancy

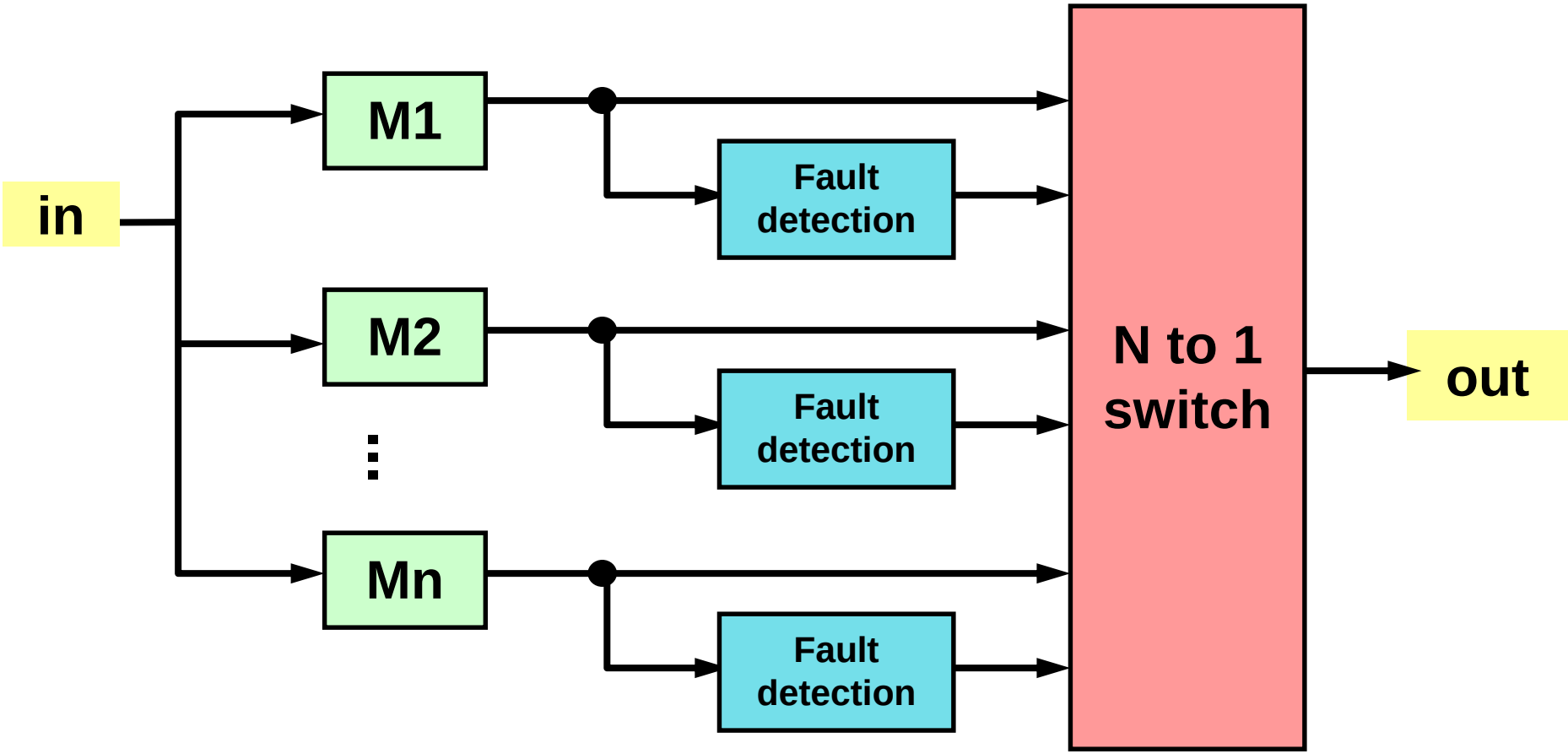

Hot standby

- In hot standby sparing spares operate in synchrony with on-line module and are prepared to take over any time

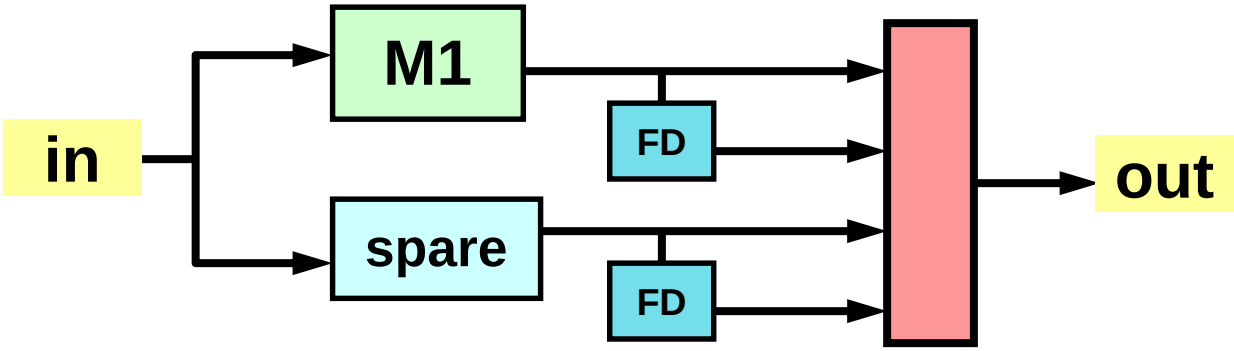

Cold standby

- In cold standby sparing spares are unpowered until needed to replace a faulty module

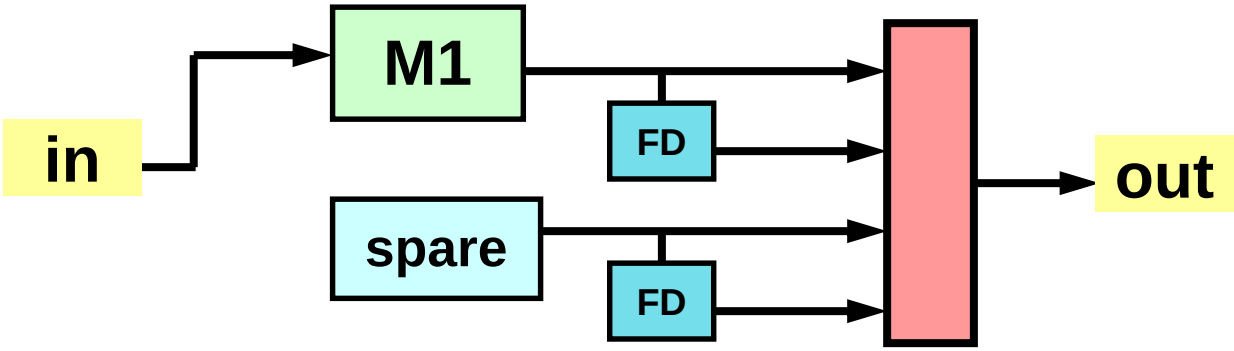

+ and - of cold standby

(-) time is required to bring the module to operational state

- time to apply power to spare and to initialize it
- not desirable in applications requiring minimal reconfiguration time (control of chemical reactions)

(+) spares do not consume power

- desirable in applications where power consumption is critical (satellite)

Fault-tolerant capabilities

- Standby redundancy with *n* modules can tolerate $n - 1$ module faults
  - “tolerate” means that system detects, locates and recovers from fault to continue operation
- When the *n*th fault occurs, it is detected, but the system is not able to recover
  - the *n*th fault is not tolerated

Pair-and-a-spare technique

- Combines standby redundancy and duplication with comparison
- Like standby, but two instead of one modules are always operated in parallel
  - their results are compared to provide error detection
  - error signal initiates reconfiguration

Pair-and-a-spare technique

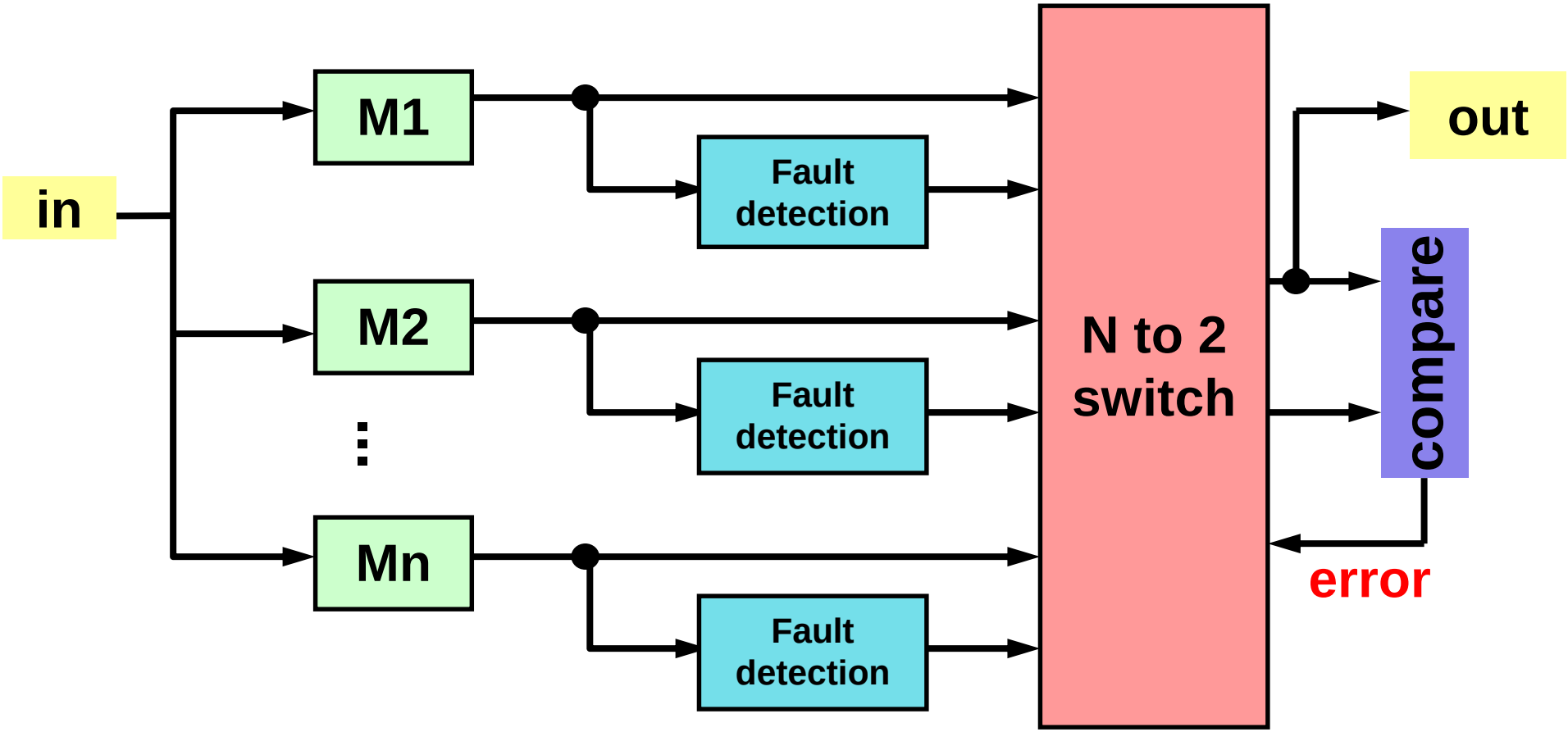

Fault-tolerant capabilities

- Pair-and-a-spare system with n modules can tolerate $n-2$ module faults
- When the $n-1$st fault occurs, it is detected and located by the switch, and the correct result is produced
- However, since there are no more spares, the system cannot reconfigure to continue its normal operation

Watchdog timer

- watchdog timer
  - must be reset an on a repetitive basic
  - if not reset - system is turned off (or reset)
  - detection of
    - crash
    - overload
    - infinite loop
  - frequency depends on application
    - aircraft control system - 100 msec
    - banking - 1 sec

HW redundancy: overview

- static techniques (passive)
  - fault masking
- dynamic techniques (active)
  - detection, localisation, containment, recovery
- hybrid techniques
  - static + dynamic
  - fault masking + reconfiguration

Hybrid HW redundancy

- combines
  - static redundancy
    - fault masking
  - dynamic redundancy
    - detection, location, containment and recovery
- very expensive but more FT

Types of hybrid redundancy

- Self-purging redundancy
- N-modular redundancy with spares
- Triple-duplex architecture

Self-purging redundancy

- All units are actively participate in the system
- each module has a capability to remove itself from the system if its faulty
  - very attractive feature: maintenance personnel can disable individual modules and replace them without interrupting the system

Self-purging redundancy

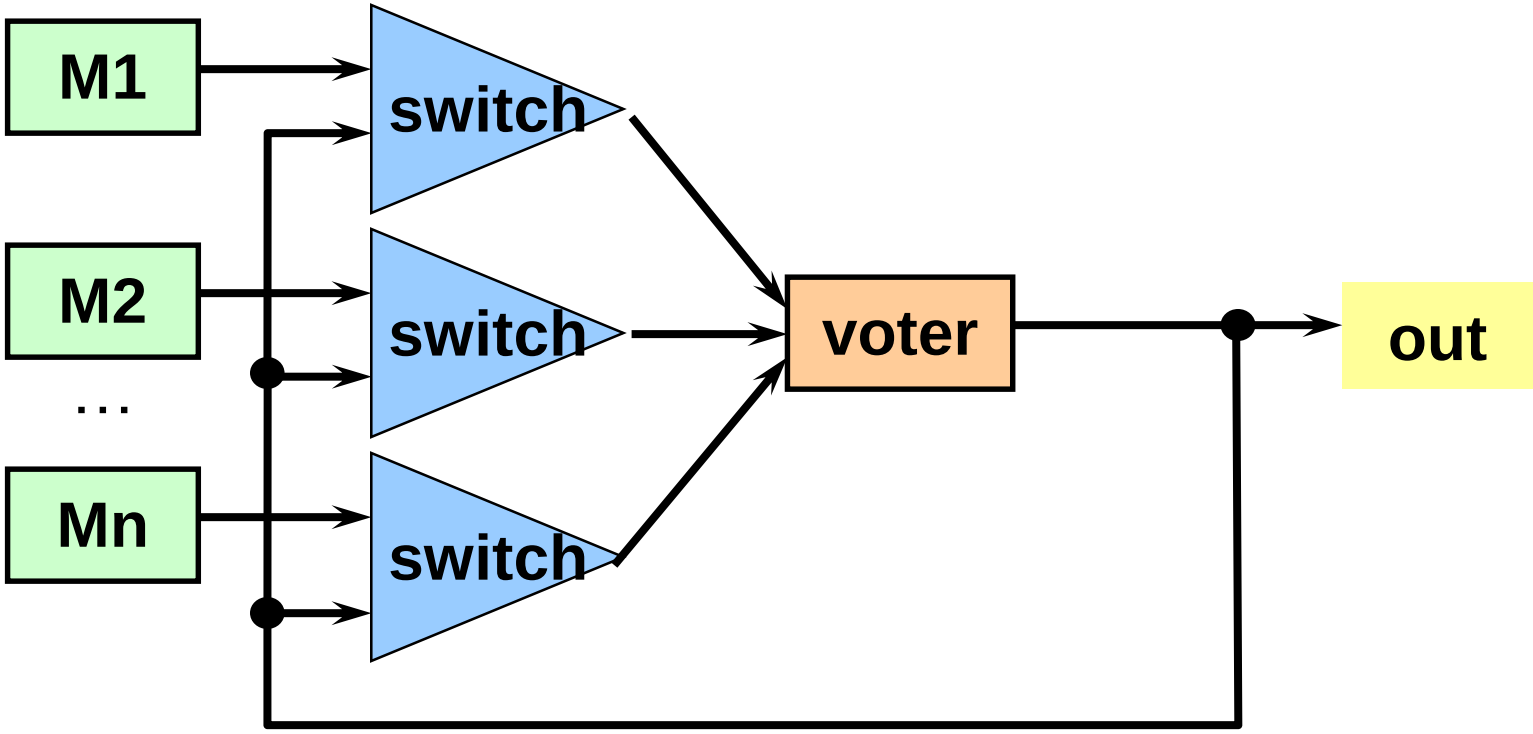

Basic structure of a switch

- If output of a module disagrees with the output of the system, its contribution to the voter is forced to be 0 (threshold voter)

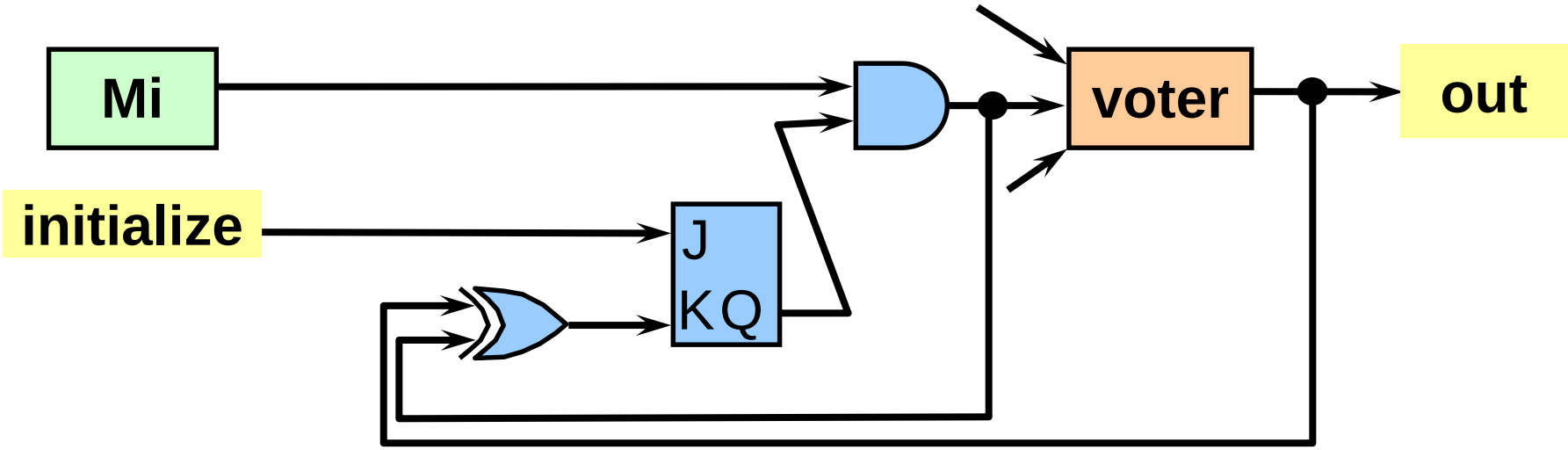

Threshold voter

- n inputs $x_1, x_2, \ldots, x_n$ with weights $w_1, w_2, \ldots, w_n$
- The output f is computed by comparing the sum of weighted input values to the threshold value T

$$f = \begin{cases} 1, \text{ if } \sum_{i=1}^{n} w_i x_i \geq T \\ 0, \text{ otherwise} \end{cases}$$

where addition and multiplication are regular arithmetic operations

Fault-tolerant capabilities

- Self-purging redundancy with n modules can tolerate $n-2$ module faults
- When $n-2$ modules are purged, the system is able to detect the next, $n-1$st fault, but the voter is not be able to distinguish which of the two results is correct

Reliability evaluation, perfect voter and switch

- All modules operate in parallel
- It is enough that two modules work correctly for the system to be operational
- If $R_1 = R_2 = \ldots = R_n = R$, then

$$R_{SP} = 1 - ((1-R)^n + nR(1-R)^{n-1})$$

Reliability of self-purging redundancy

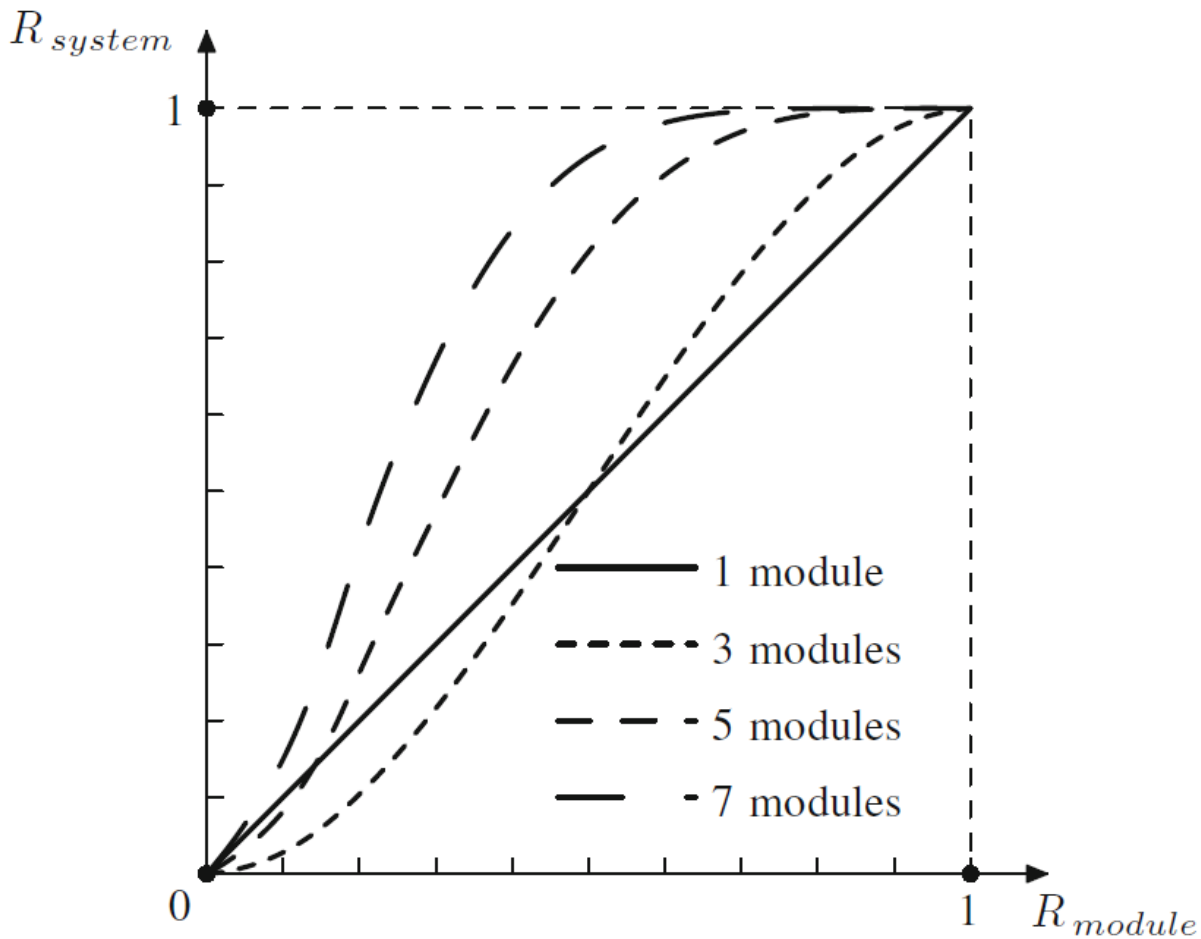

Self-purging redundancy with 5 modules vs 5MR

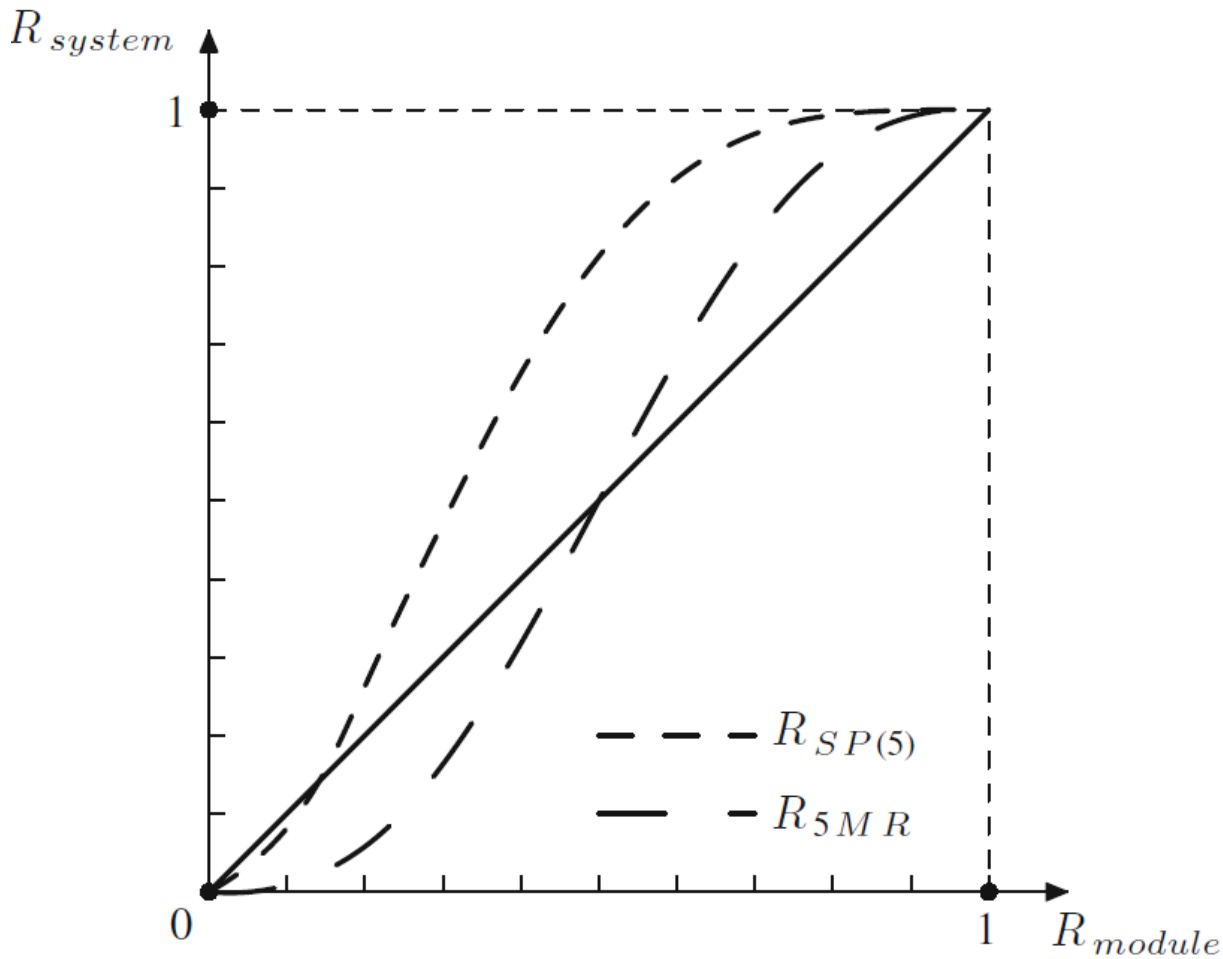

N-modular redundancy with spares

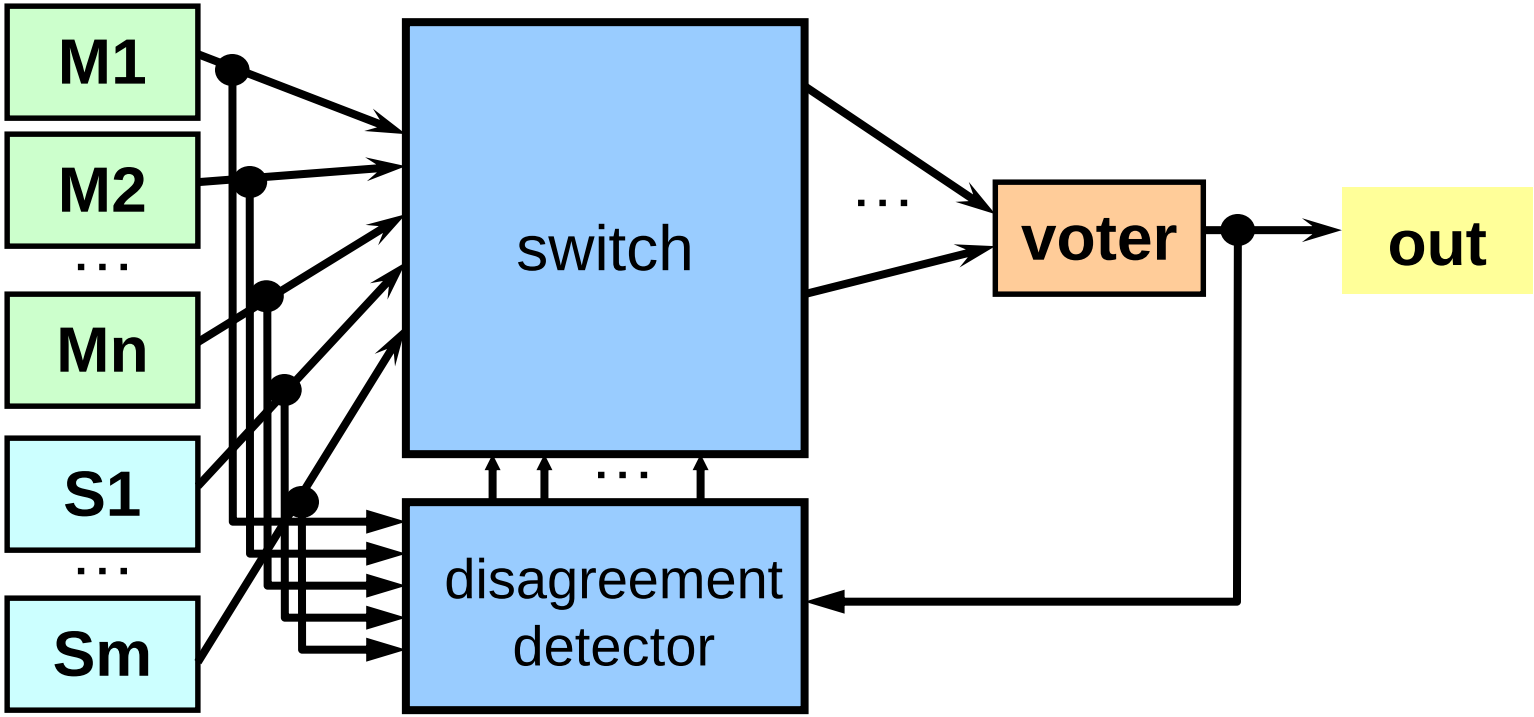

NMR with spares

- System remains in the basic NMR configuration until the disagreement vector determines a fault
- the output of the voter is compared to the individual outputs of the modules
- module which disagrees is labeled as faulty and removed from the NMR core
- spare is switched to replace it

NMR with spares

- The reliability is maintained as long as the pool of spares is not exhausted
- N-modular redundancy with k spares can tolerate $\lfloor N/2 \rfloor + k$ module faults
- For example, if N = 3 and k = 1, 2 faults can be tolerated
  - to do it with passive NMR, we need 5 modules

Triple-duplex architecture

- Combines duplication with comparison and triple modular redundancy

Triple-duplex architecture

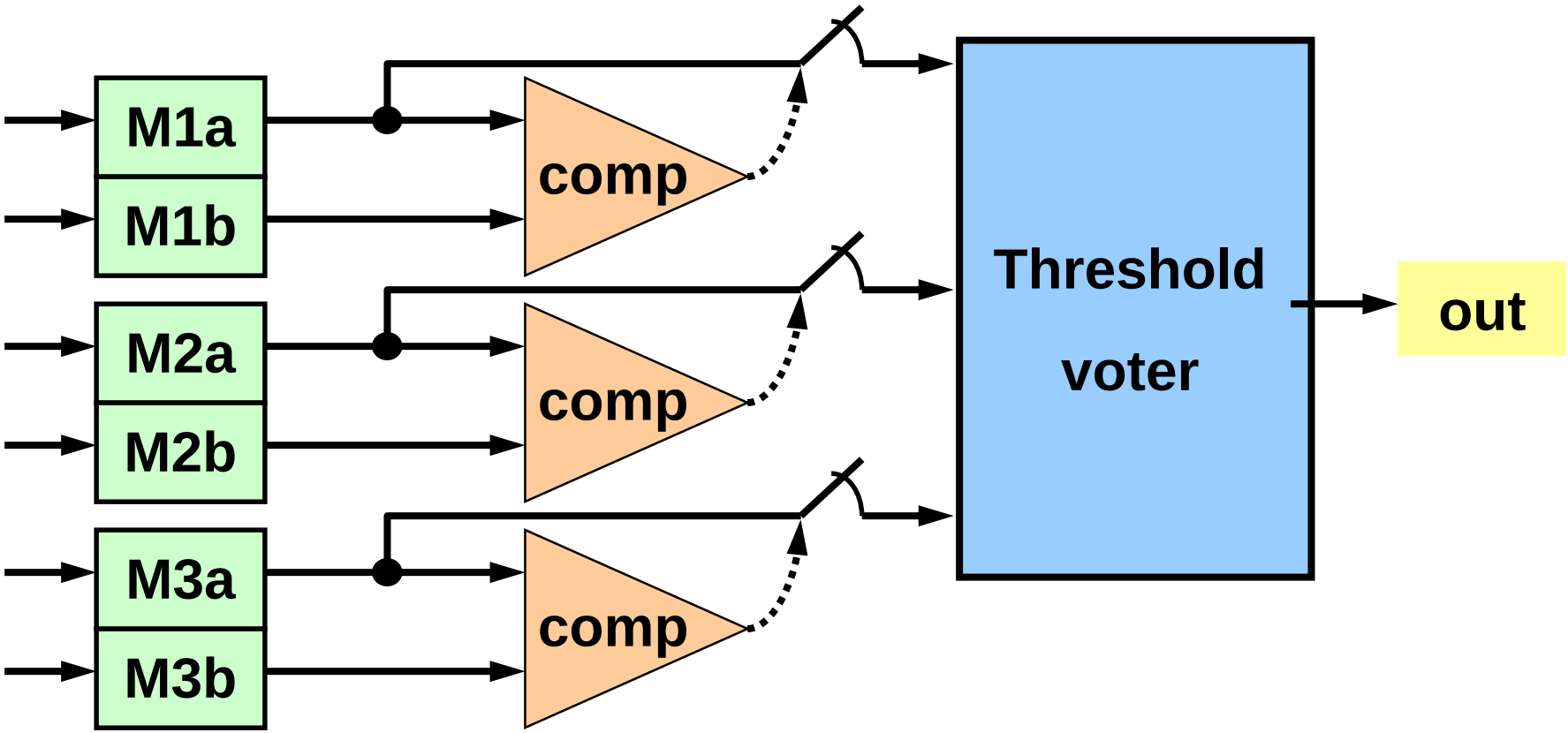

Triple-duplex architecture

- TMR allows faults to be masked
  - performance without interruption
- duplication with comparison allows faults to be detected and faulty pair removed from voting
  - removal of faulty pair enables toleration of future faults
- two module faults can be tolerated

Summary

- application-dependent choice
  - critical-computation - momentary erroneous results are not acceptable
    - passive or hybrid
  - long-life, high-availability - system should be restored quickly
    - active
  - very critical applications - highest reliability
    - hybrid

Next lecture

- Information redundancy

Read chapter 5

of the text book