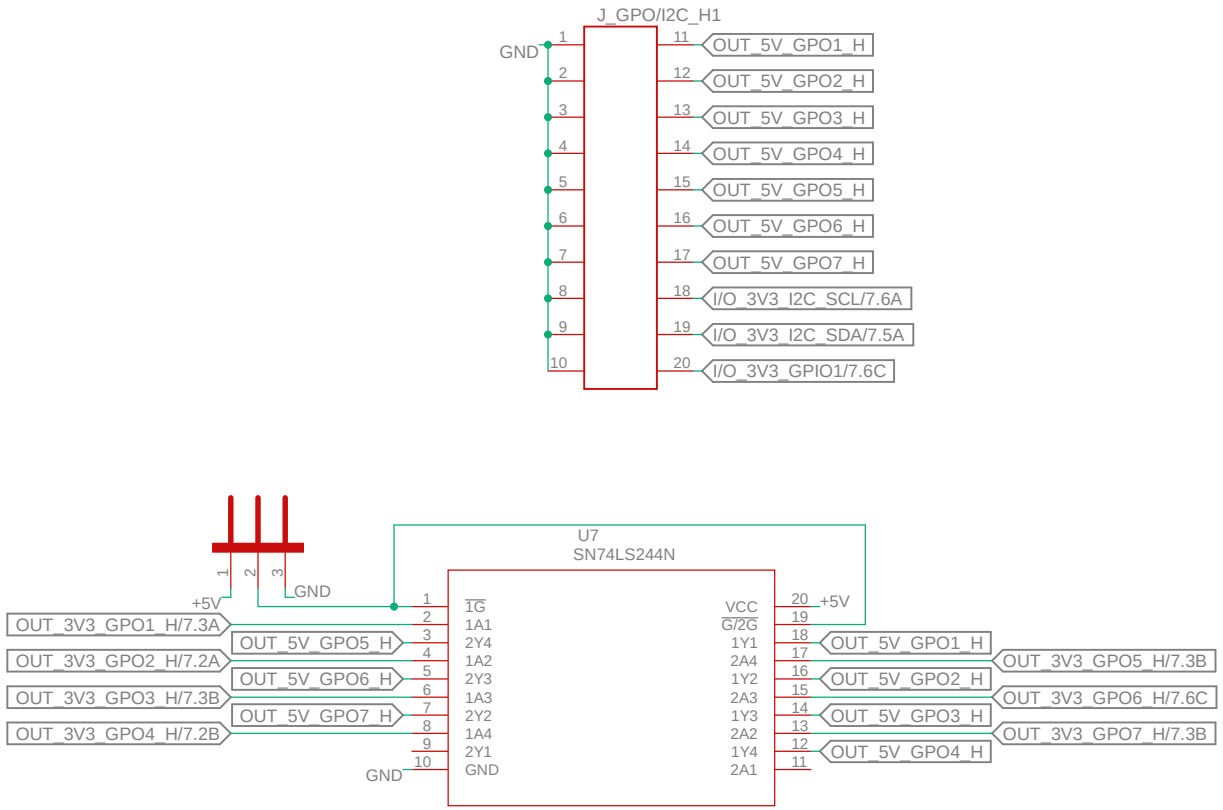

comando 24V

not saved!

Sheet: 12/12