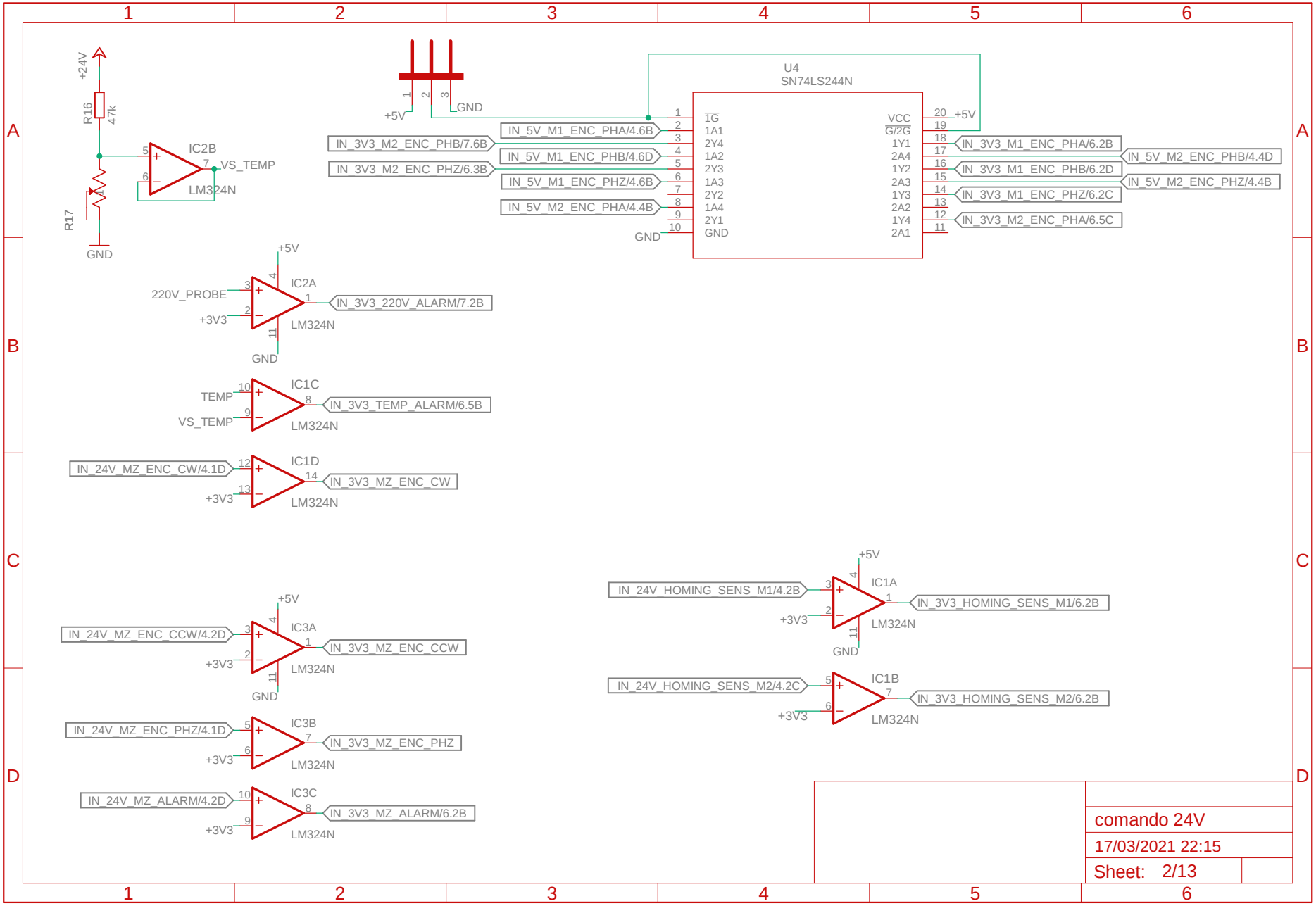
+24V
R16
47k
R17
GND
IC2B
VS_TEMP
LM324N
+5V
GND
U4
SN74LS244N
IN_3V3_M2_ENC_PHB/7.6B
IN_3V3_M2_ENC_PHZ/6.3B
IN_5V_M1_ENC_PHA/4.6B
IN_5V_M1_ENC_PHB/4.6D
IN_5V_M1_ENC_PHZ/4.6B
IN_5V_M2_ENC_PHA/4.4B
1G
1A1
2Y4
1A2
2Y3
1A3
2Y2
1A4
2Y1
GND
VCC
G/2G
1Y1
2A4
1Y2
2A3
1Y3
2A2
1Y4
2A1
IN_3V3_M1_ENC_PHA/6.2B
IN_3V3_M1_ENC_PHB/6.2D
IN_3V3_M1_ENC_PHZ/6.2C
IN_3V3_M2_ENC_PHA/6.5C
IN_5V_M2_ENC_PHB/4.4D
IN_5V_M2_ENC_PHZ/4.4B
IC2A
220V_PROBE
+3V3
IN_3V3_220V_ALARM/7.2B
IC1C
TEMP
VS_TEMP
IN_3V3_TEMP_ALARM/6.5B
IC1D
IN_24V_MZ_ENC_CW/4.1D
IN_3V3_MZ_ENC_CW
IC3A
IN_24V_MZ_ENC_CCW/4.2D
IN_3V3_MZ_ENC_CCW
IC3B
IN_24V_MZ_ENC_PHZ/4.1D
IN_3V3_MZ_ENC_PHZ
IC3C
IN_24V_MZ_ALARM/4.2D
IN_3V3_MZ_ALARM/6.2B
IC1A
IN_24V_HOMING_SENS_M1/4.2B
IN_3V3_HOMING_SENS_M1/6.2B
IC1B
IN_24V_HOMING_SENS_M2/4.2C
IN_3V3_HOMING_SENS_M2/6.2B
comando 24V
17/03/2021 22:15
Sheet: 2/13