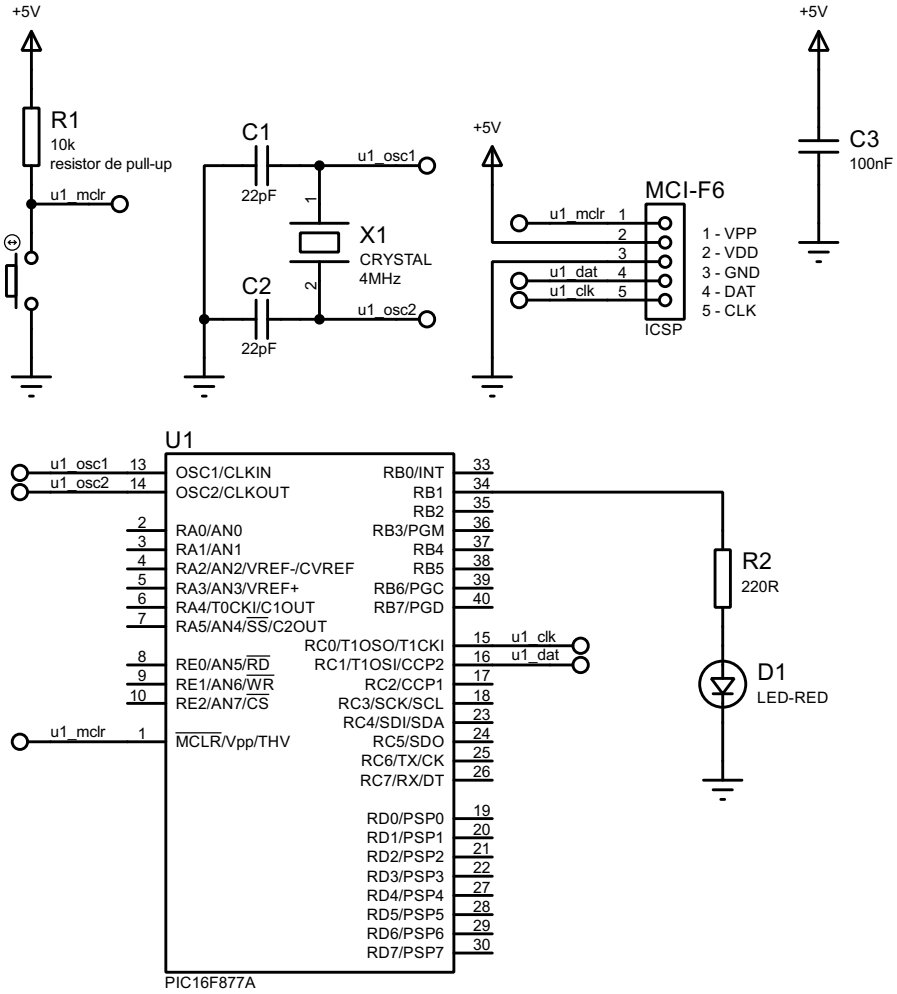
+5V
R1
10k
resistor de pull-up
u1_mclr
C1
22pF
C2
22pF
X1
CRYSTAL
4MHz
u1_osc1
u1_osc2
+5V
MCI-F6
u1_mclr
u1_dat
u1_clk
1 - VPP
2 - VDD
3 - GND
4 - DAT
5 - CLK
ICSP
+5V
C3
100nF
U1
OSC1/CLKIN
OSC2/CLKOUT
RA0/AN0
RA1/AN1
RA2/AN2/VREF-/CVREF
RA3/AN3/VREF+
RA4/T0CKI/C1OUT
RA5/AN4/SS/C2OUT
RE0/AN5/RD
RE1/AN6/WR
RE2/AN7/CS
MCLR/Vpp/THV
RB0/INT
RB1
RB2
RB3/PGM
RB4
RB5
RB6/PGC
RB7/PGD
RC0/T1OSO/T1CKI
RC1/T1OSI/CCP2
RC2/CCP1
RC3/SCK/SCL
RC4/SDI/SDA
RC5/SDO
RC6/TX/CK
RC7/RX/DT
RD0/PSP0
RD1/PSP1
RD2/PSP2
RD3/PSP3
RD4/PSP4
RD5/PSP5
RD6/PSP6
RD7/PSP7
PIC16F877A
R2
220R
D1
LED-RED