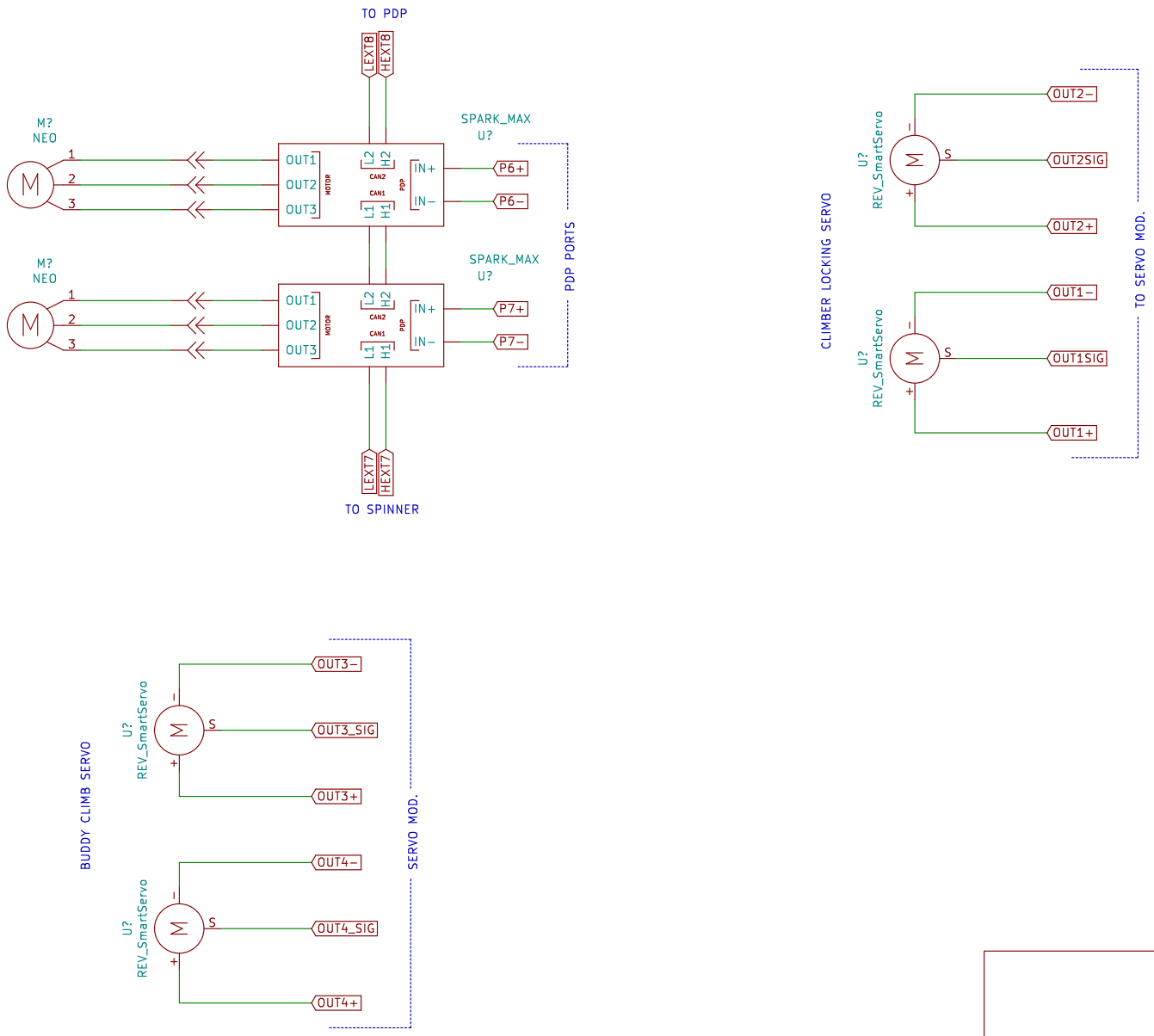

Sheet: /
File: Climber, Traverser, & Buddy Climb.sch

Title:

Size: A4	Date:	**Rev:**
KiCad E.D.A. eeschema (5.0.1)−3		Id: 1/1