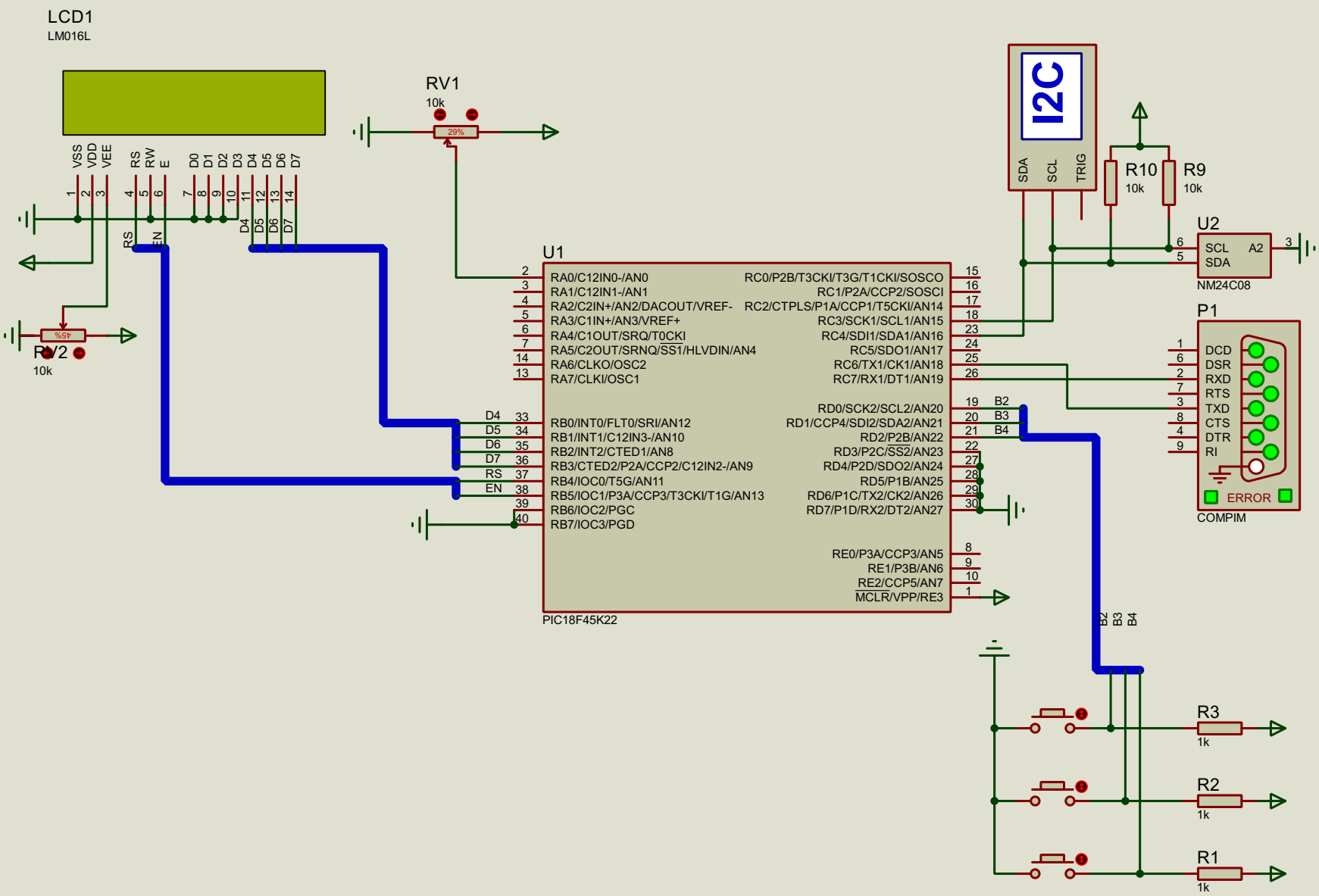
LCD1
LM016L
VSS VDD VEE RS RW E D0 D1 D2 D3 D4 D5 D6 D7
RV1
10k
29%
RV2
10k
45%
U1
PIC18F45K22
RA0/C12IN0-/AN0
RA1/C12IN1-/AN1
RA2/C2IN+/AN2/DACOUT/VREF-
RA3/C1IN+/AN3/VREF+
RA4/C1OUT/SRQ/T0CKI
RA5/C2OUT/SRNQ/SS1/HLVDIN/AN4
RA6/CLKO/OSC2
RA7/CLKI/OSC1
RB0/INT0/FLT0/SRI/AN12
RB1/INT1/C12IN3-/AN10
RB2/INT2/CTED1/AN8
RB3/CTED2/P2A/CCP2/C12IN2-/AN9
RB4/IOC0/T5G/AN11
RB5/IOC1/P3A/CCP3/T3CKI/T1G/AN13
RB6/IOC2/PGC
RB7/IOC3/PGD
RC0/P2B/T3CKI/T3G/T1CKI/SOSCO
RC1/P2A/CCP2/SOSCI
RC2/CTPLS/P1A/CCP1/T5CKI/AN14
RC3/SCK1/SCL1/AN15
RC4/SDI1/SDA1/AN16
RC5/SDO1/AN17
RC6/TX1/CK1/AN18
RC7/RX1/DT1/AN19
RD0/SCK2/SCL2/AN20
RD1/CCP4/SDI2/SDA2/AN21
RD2/P2B/AN22
RD3/P2C/SS2/AN23
RD4/P2D/SDO2/AN24
RD5/P1B/AN25
RD6/P1C/TX2/CK2/AN26
RD7/P1D/RX2/DT2/AN27
RE0/P3A/CCP3/AN5
RE1/P3B/AN6
RE2/CCP5/AN7
MCLR/VPP/RE3
I2C
SDA SCL TRIG
R10
10k
R9
10k
U2
SCL SDA A2
NM24C08
P1
DCD DSR RXD RTS TXD CTS DTR RI
ERROR
COMPIM
B2 B3 B4
R3
1k
R2
1k
R1
1k