WEEK 6: AREA AND VOLUME OF FRUSTUM (WPS CLEAN VERSION)

1. INTRODUCTION

A **frustum** is the part of a cone or pyramid left after the top is cut off by a plane **parallel to the base**.

Real-Life Examples

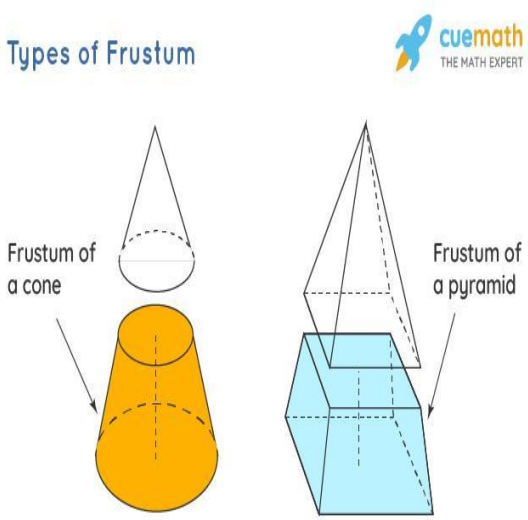

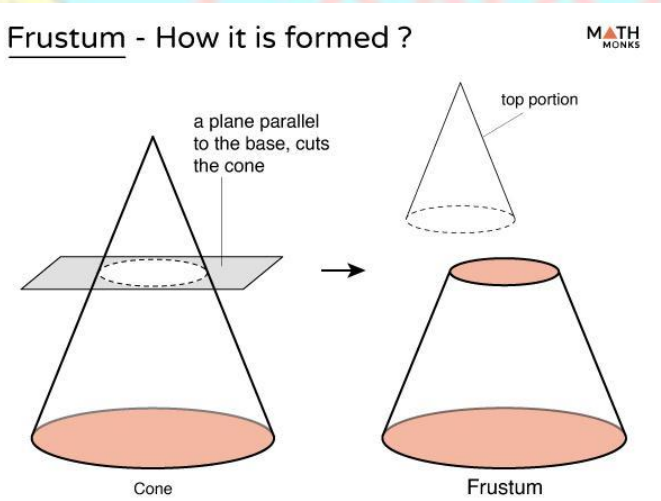

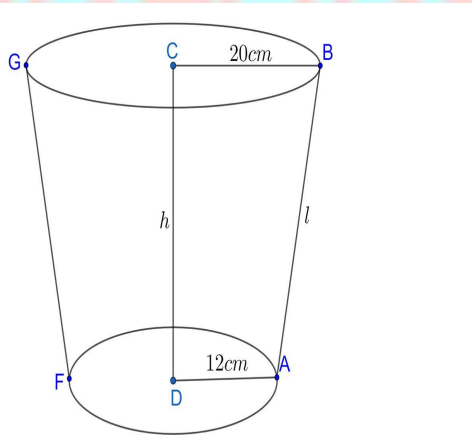

6

Examples:

- Bucket

- Wine glass
- Vase
- Trumpet
- Trash can

Key Idea

Large Cone = Small Cone + Frustum

So:

Frustum = Large Cone − Small Cone

2. CONTENT

A. FINDING THE MISSING HEIGHT OF AF FRUSTRUM

To solve frustum problems, you must first find the height of the **original cone** using **similar triangles**.

Variables

- R = radius of large base
- r = radius of small top
- H = total height of large cone
- hs = height of small cone
- hf = height of frustum

Relationship:

H = hs + hf

Diagram

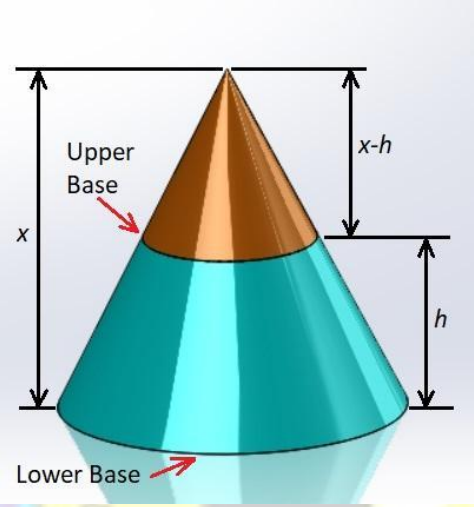

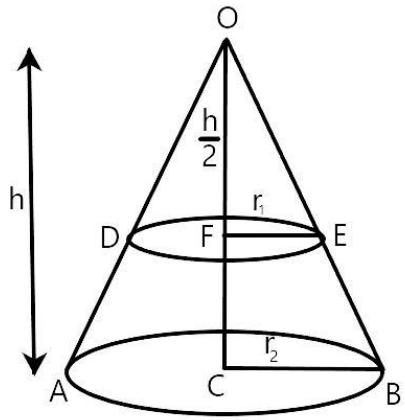

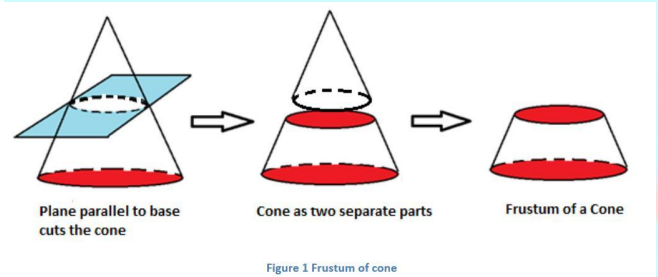

Figure 1 Frustum of cone

Similar Triangle Ratio

r / R = hs / H

Since H = hs + hf:

r / R = hs / (hs + hf)

Rearrangement

hs = (r × H) / R

B. VOLUME OF A FRUSTUM

Formula

Volume of frustum = Volume of large cone − Volume of small cone

Volume of cone = (1/3) × π × radius² × height

So:

$V = (1/3 \times \pi \times R^2 \times H) - (1/3 \times \pi \times r^2 \times hs)$

Visual Idea

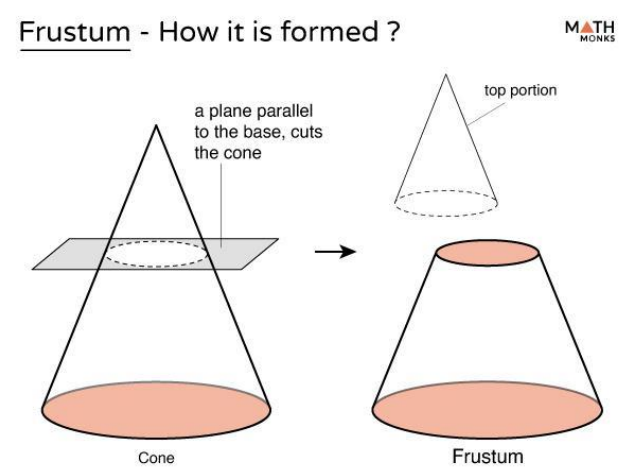

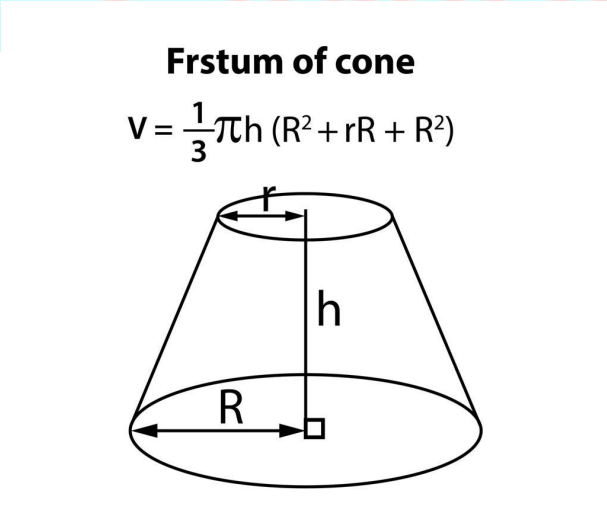

C. SURFACE AREA OF A FRUSTUM

Total Surface Area (TSA)

TSA = area of top + area of bottom + curved surface

TSA = $\pi r^2 + \pi R^2 + \pi(RL - rls)$

Where:

- L = slant height of large cone
- ls = slant height of small cone

D. COMPOUND SHAPES

Examples

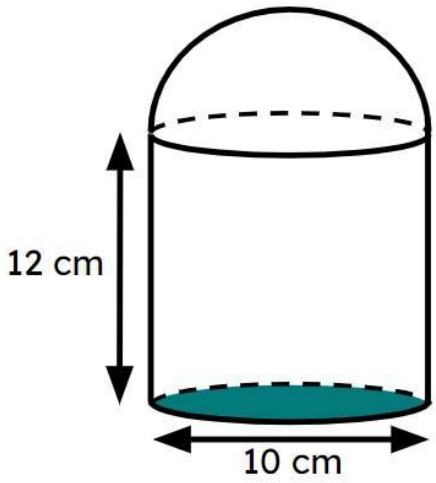

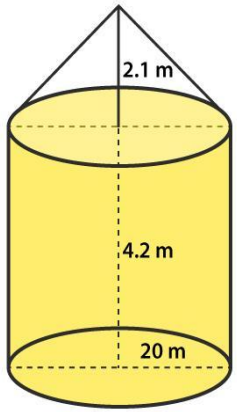

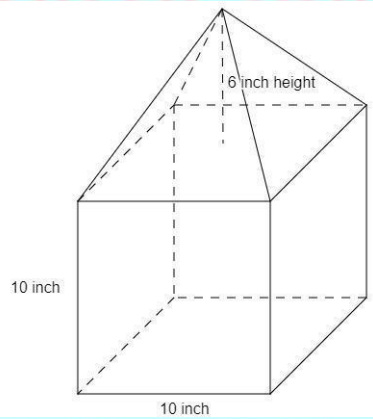

Rules

- Volume → ADD all parts
- Surface area → Add only visible surfaces
- Do NOT include hidden parts

3. FULL WORKED EXAMPLES

Example 6.1: Volume of Frustum

A bucket is 28 cm high
Top radius = 10 cm
Bottom radius = 15 cm
Use $\pi = 22/7$

Step 1: Given

hf = 28
R = 15
r = 10

Step 2: Find small cone height (hs)

r / R = hs / (hs + 28)

10 / 15 = hs / (hs + 28)

2 / 3 = hs / (hs + 28)

Cross multiply:

2(hs + 28) = 3hs

2hs + 56 = 3hs

56 = hs

Step 3: Find total height

H = hs + hf

H = 56 + 28 = 84

Step 4: Volume of large cone

V = (1/3 × 22/7 × 15^2 × 84)

= (1/3 × 22/7 × 225 × 84)

= (22 × 225 × 84) / 21

= 22 × 225 × 4

= 19,800 cm^3

Step 5: Volume of small cone

V = (1/3 × 22/7 × 10^2 × 56)

= (22 × 100 × 56) / 21

= (22 × 100 × 8) / 3

= 17,600 / 3

= 5,866.67 cm^3

Step 6: Frustum volume

$V = 19{,}800 - 5{,}866.67$

$V = 13{,}933.33\ cm^3$

Final Answer

$13{,}933.33\ cm^3$

Example 6.2: Compound Shape

A hemisphere sits on a cylinder

Radius = 7 cm
Cylinder height = 10 cm

Step 1: Cylinder

$V = \pi r^2 h$

$= 22/7 \times 7^2 \times 10$

$= 22 \times 7 \times 10$

$= 1{,}540\ cm^3$

Step 2: Hemisphere

$V = (2/3 \times \pi \times r^3)$

$= 2/3 \times 22/7 \times 343$

= (2 × 22 × 49) / 3

= 2,156 / 3

= 718.67 cm³

Step 3: Total

V = 1,540 + 718.67

= 2,258.67 cm³

Final Answer

2,258.67 cm³

4. REVISION QUESTIONS

1. What is a frustum?
2. State the similar triangle ratio
3. Write volume formula
4. Write TSA formula
5. Explain hidden surfaces

5. ASSESSMENT

Classwork

- Draw and label frustum
- Write ratio
- Solve problems

CANAANLAND
MODEL GROUP OF SCHOOLS
GOD IS OUR STRENGTH

CANAANLAND
MODEL GROUP OF SCHOOLS
GOD IS OUR STRENGTH