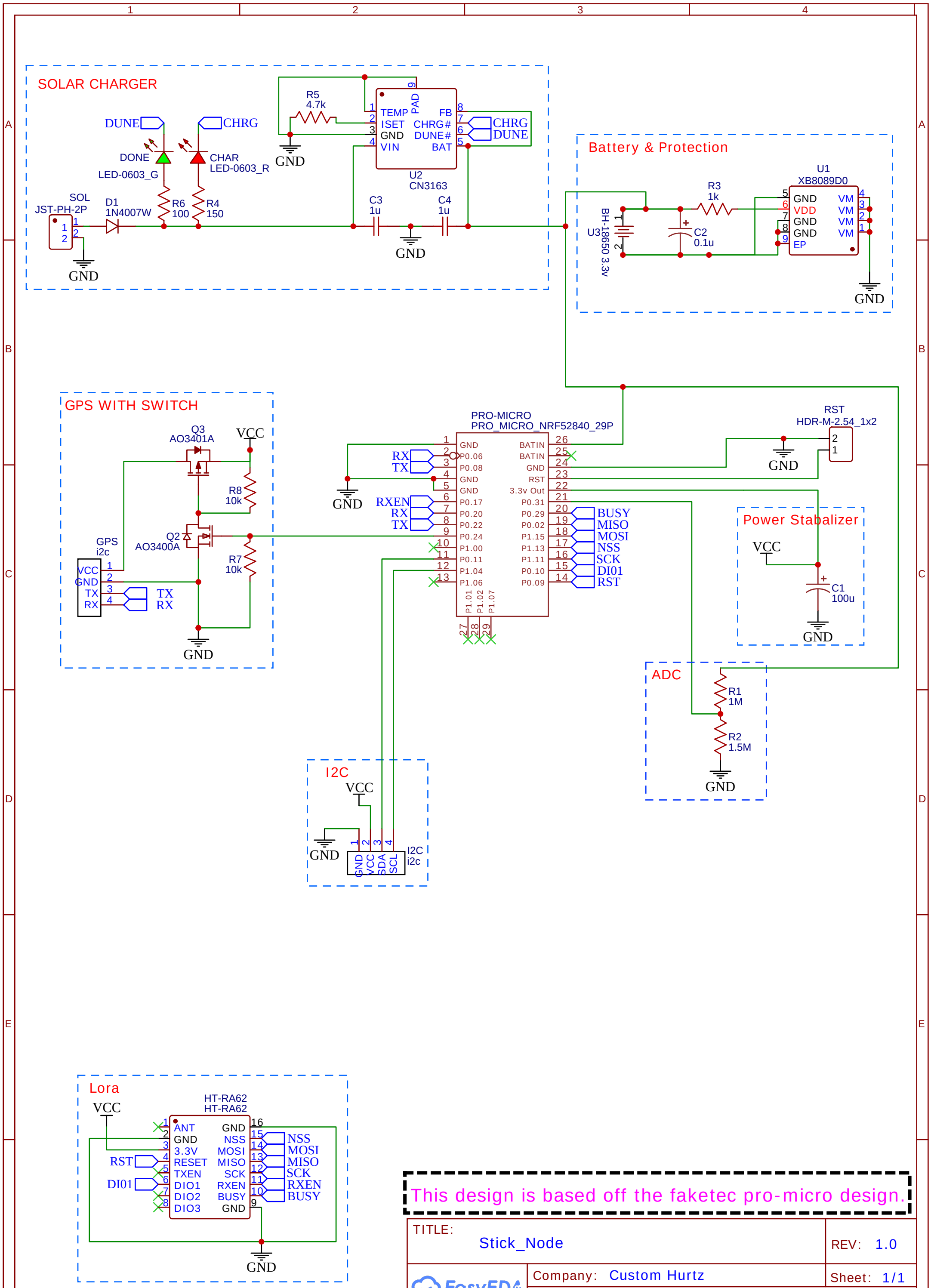

This design is based off the faketec pro-micro design.

TITLE: Stick_Node		REV: 1.0
EasyEDA	Company: Custom Hurtz	Sheet: 1/1
	Date: 2024-12-23 Drawn By: canadamadman	