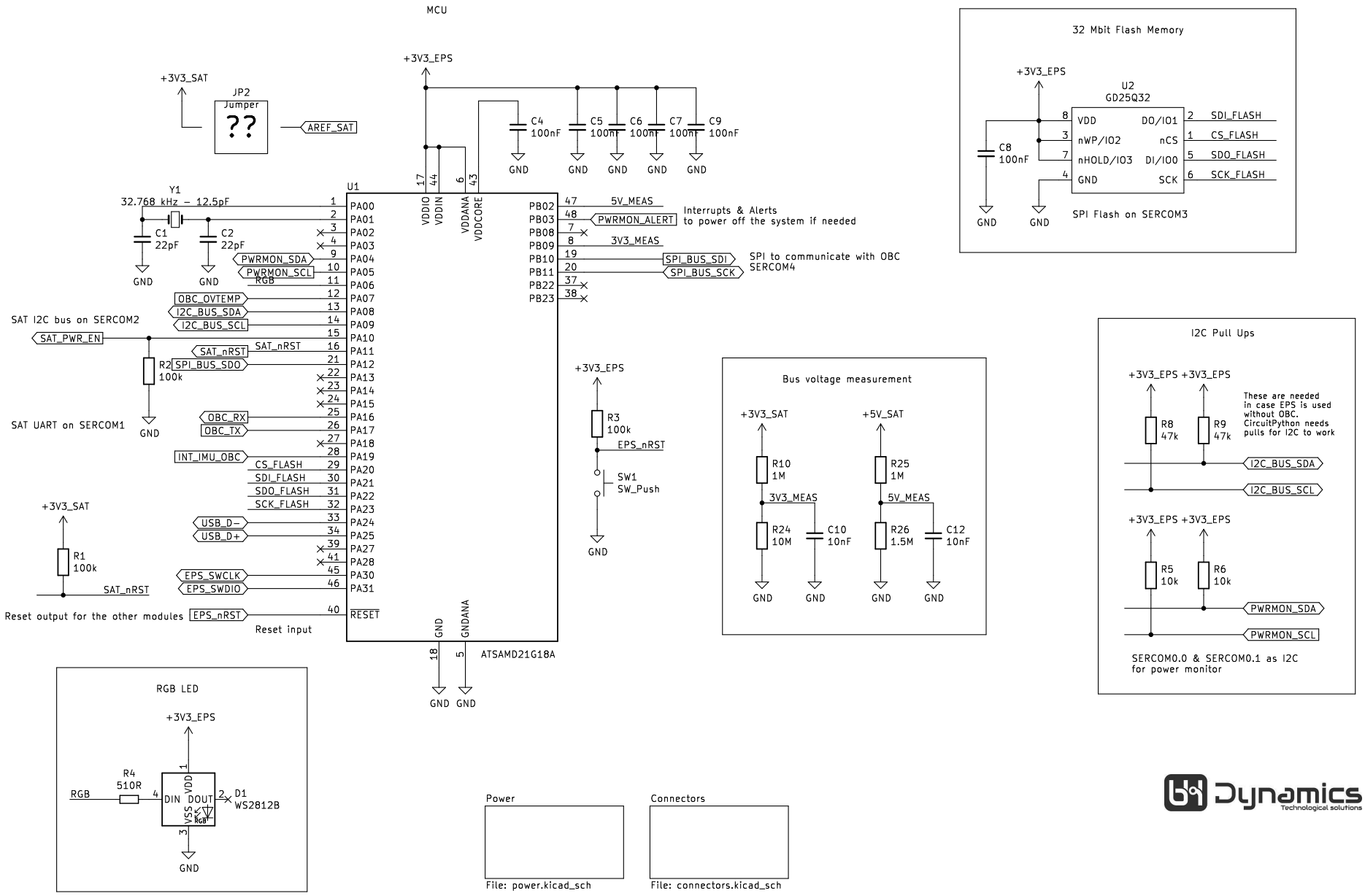
MCU
+3V3_EPS
+3V3_SAT
JP2
Jumper
??
AREF_SAT
C4 100nF
C5 100nF
C6 100nF
C7 100nF
C9 100nF
GND
Y1
32.768 kHz – 12.5pF
C1 22pF
C2 22pF
U1
VDDIO
VDDIN
VDDANA
VDDCORE
PWRMON_SDA
PWRMON_SCL
RGB
OBC_OVTEMP
I2C_BUS_SDA
I2C_BUS_SCL
SAT I2C bus on SERCOM2
SAT_PWR_EN
SAT_nRST
R2 100k
SPI_BUS_SDO
SAT UART on SERCOM1
OBC_RX
OBC_TX
INT_IMU_OBC
CS_FLASH
SDI_FLASH
SDO_FLASH
SCK_FLASH
USB_D−
USB_D+
EPS_SWCLK
EPS_SWDIO
R1 100k
Reset output for the other modules
EPS_nRST
Reset input
RESET
GND
GNDANA
ATSAMD21G18A
PB02 5V_MEAS
PB03 PWRMON_ALERT
PB08
PB09 3V3_MEAS
PB10 SPI_BUS_SDI
PB11 SPI_BUS_SCK
PB22
PB23
Interrupts & Alerts
to power off the system if needed
SPI to communicate with OBC
SERCOM4
R3 100k
EPS_nRST
SW1
SW_Push
32 Mbit Flash Memory
U2
GD25Q32
VDD
nWP/IO2
nHOLD/IO3
GND
DO/IO1
nCS
DI/IO0
SCK
SDI_FLASH
CS_FLASH
SDO_FLASH
SCK_FLASH
C8 100nF
SPI Flash on SERCOM3
Bus voltage measurement
+3V3_SAT
+5V_SAT
R10 1M
R25 1M
3V3_MEAS
5V_MEAS
R24 10M
C10 10nF
R26 1.5M
C12 10nF
I2C Pull Ups
R8 47k
R9 47k
These are needed
in case EPS is used
without OBC.
CircuitPython needs
pulls for I2C to work
I2C_BUS_SDA
I2C_BUS_SCL
R5 10k
R6 10k
PWRMON_SDA
PWRMON_SCL
SERCOM0.0 & SERCOM0.1 as I2C
for power monitor
RGB LED
R4 510R
D1 WS2812B
DIN
DOUT
VDD
VSS
Power
File: power.kicad_sch
Connectors
File: connectors.kicad_sch

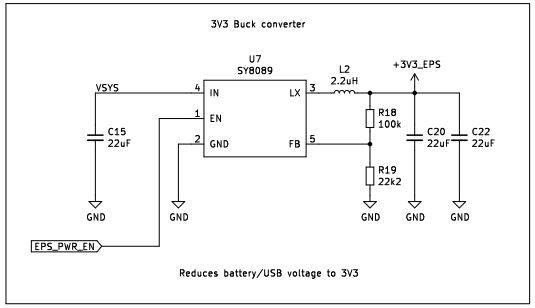

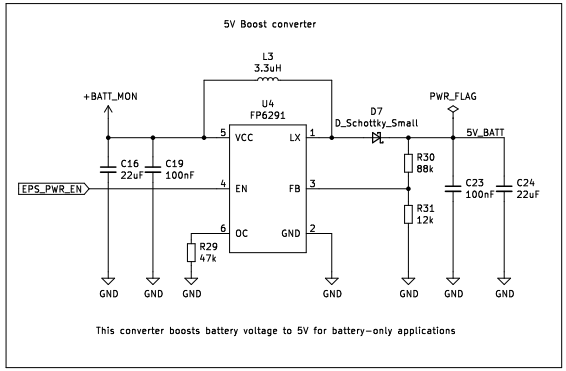

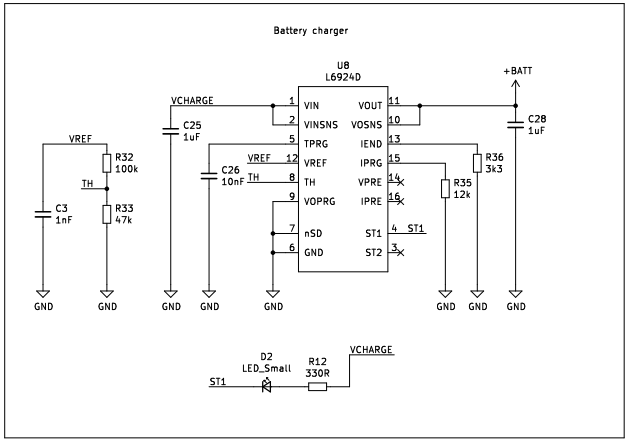

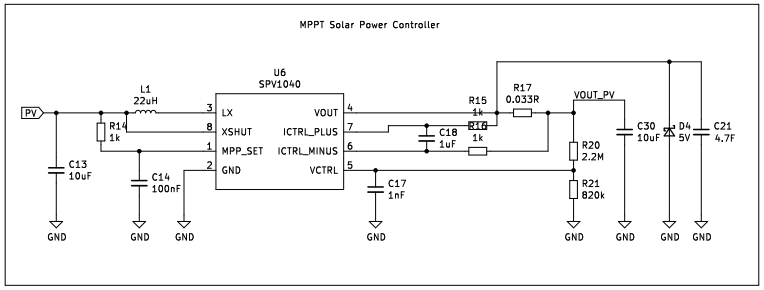

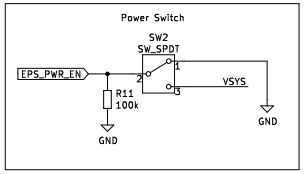

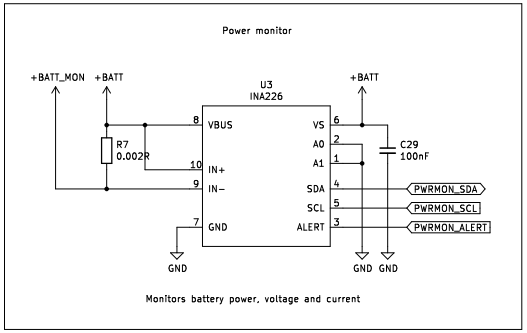

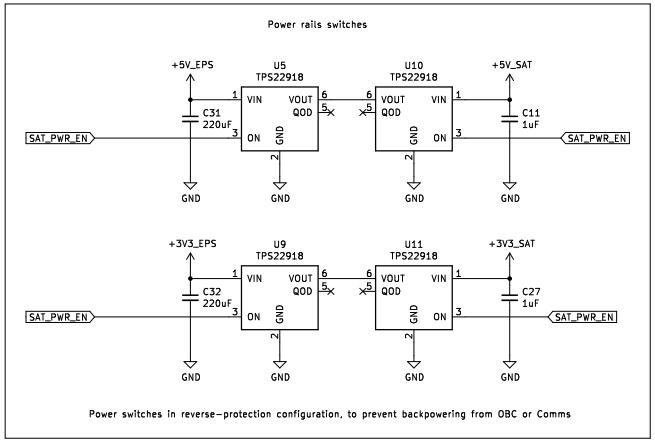

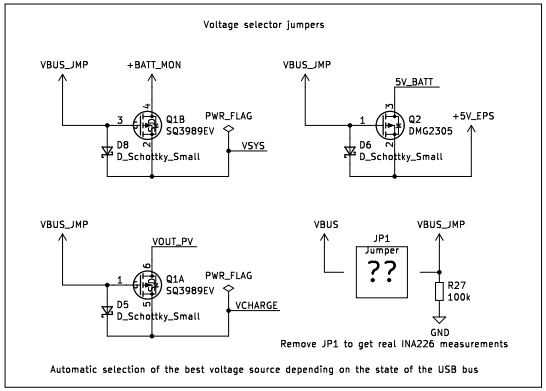

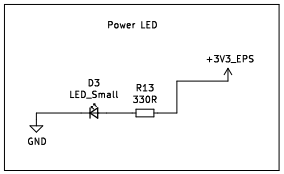

Dynamics
Technological solutions

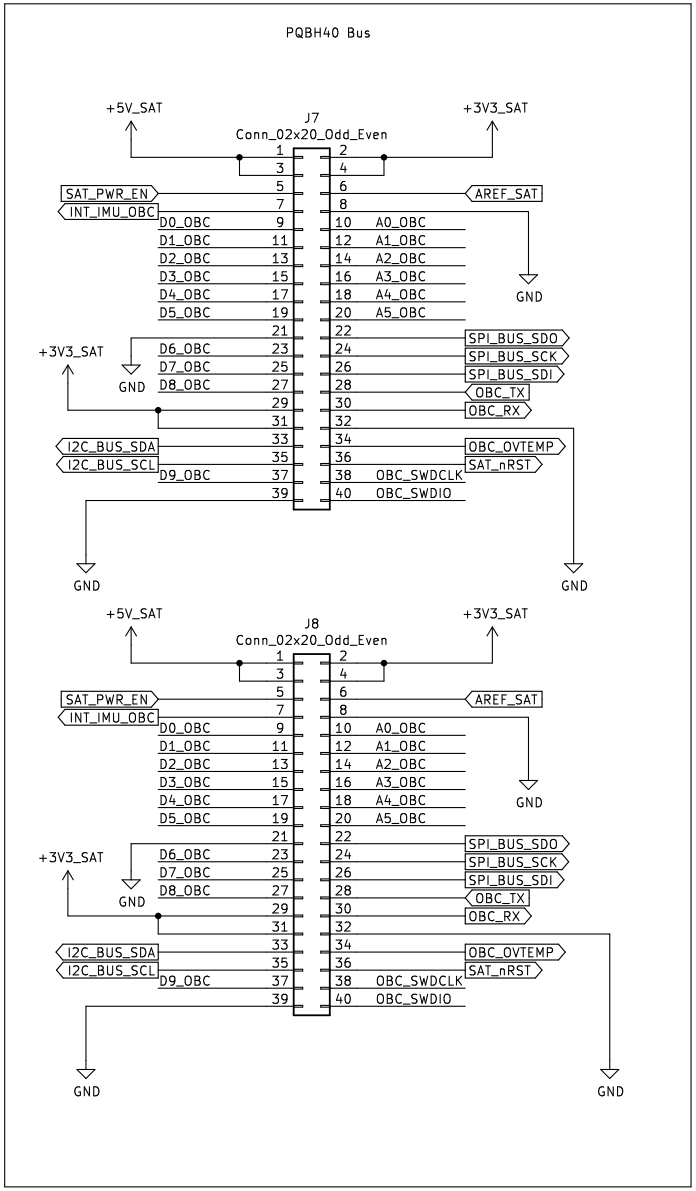

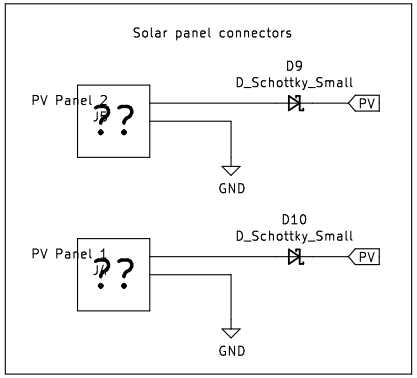

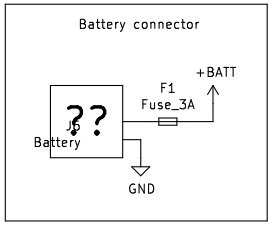

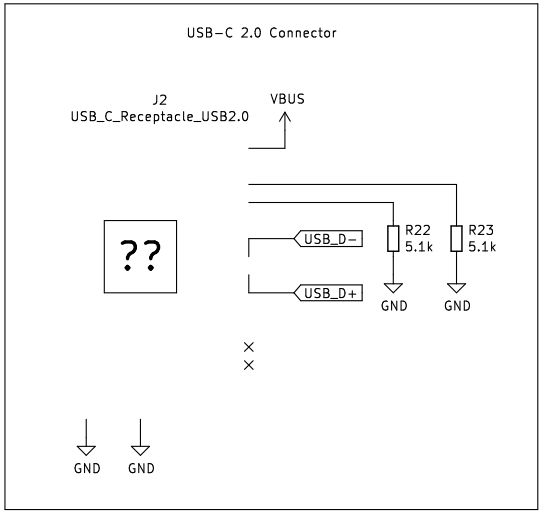

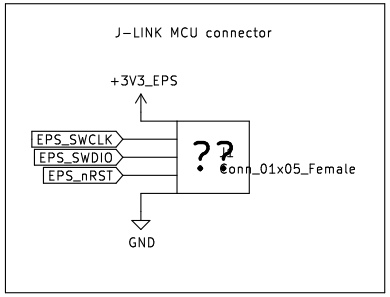

Dynamics
Technological solutions