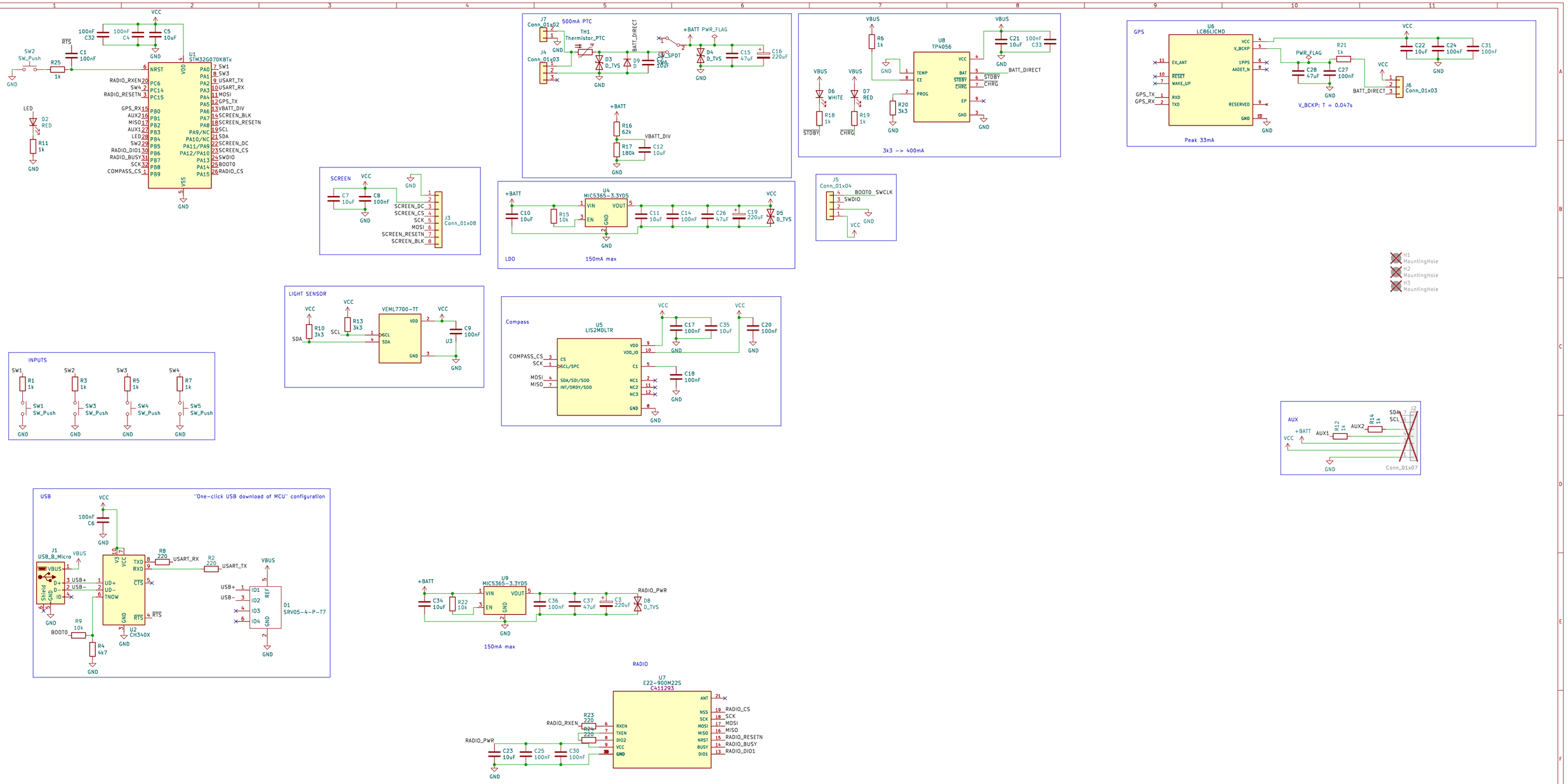

Sheet: /
File: gps-tracker.kicad_sch

Title:

Size: A2	Date:	Rev:
KiCad E.D.A. kicad 7.0.6-7.0.6-ubuntu22.04.1		Id: 1/1