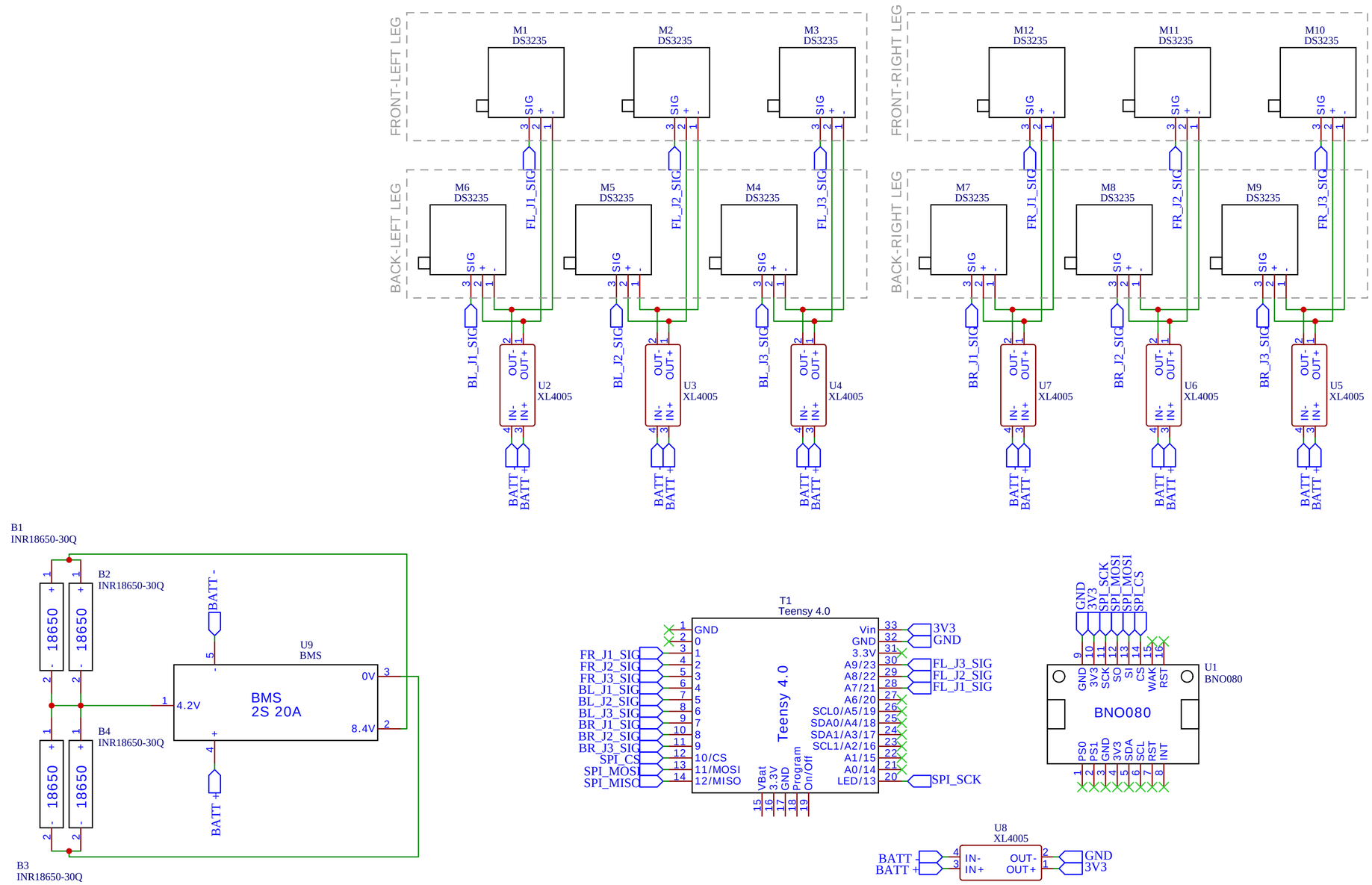


| | |
|---|---|
| TITLE: Sheet_1 | REV: 1.0 |
| Company: Your Company | Sheet: 1/1 |
| Date: 2020-05-18 Drawn By: chjrwithac | |