SIZE
A

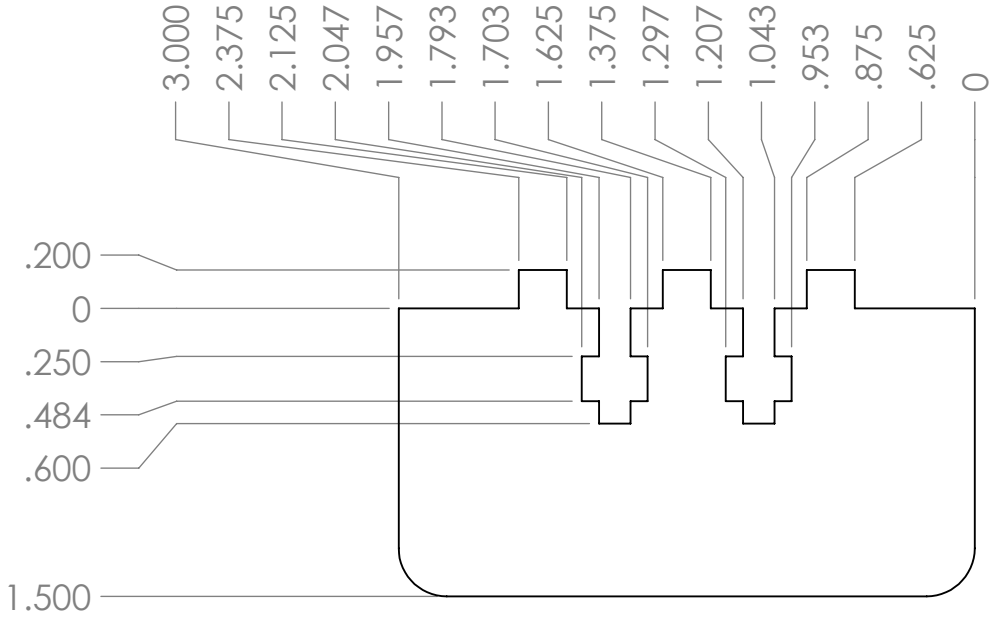

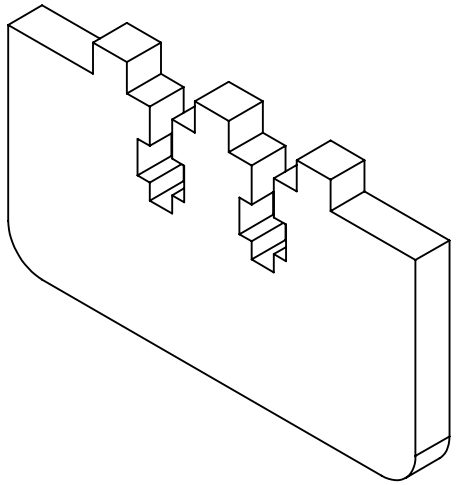

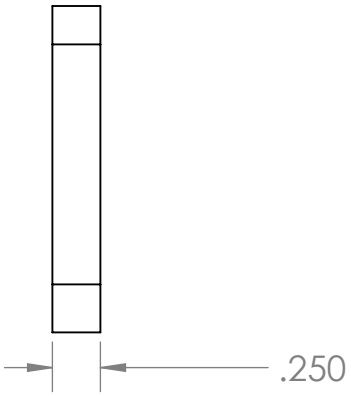

REMOVE BURRS & SHARP EDGES

UNLESS OTHERWISE SPECIFIED:
DIMENSIONS ARE IN INCHES
TOLERANCES:
FRACTIONAL ±1/32"
ANGULAR: MACH ± 2° BEND: ±1/16"
TWO PLACE DECIMAL ±0.020"
THREE PLACE DECIMAL ±0.005"

BOLT HOLE FOR EXPO

DESCRIPTION

PART NO.		GROUP
ENGINEER	SHAWN WRIGHT	DRAWN BY
		DATE: -
MATERIAL	WEIGHT	SCALE: 1:1
		REV.

H:\ME_450\Linear Book Scanner\Fastener Example\ FILE PATH

5 4 3 2 1

SHEET 1 OF 1

SIZE
A

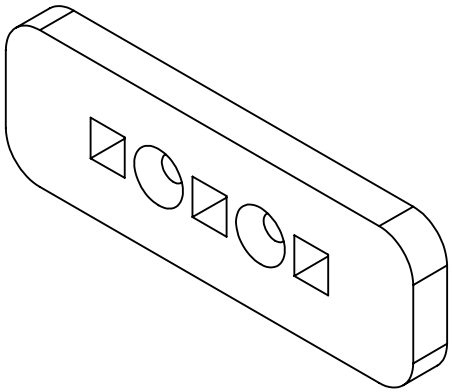

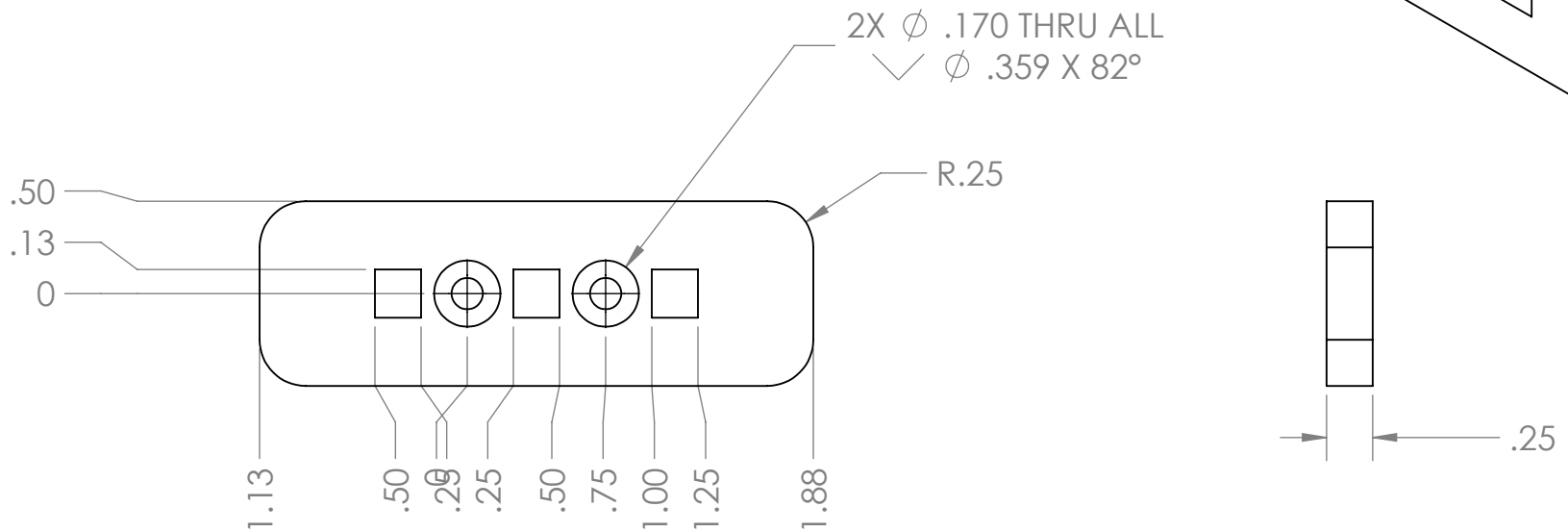

REMOVE BURRS & SHARP EDGES

UNLESS OTHERWISE SPECIFIED:
DIMENSIONS ARE IN INCHES
TOLERANCES:
FRACTIONAL ±1/32"
ANGULAR: MACH ± 2° BEND: ±1/16"
TWO PLACE DECIMAL ±0.020"
THREE PLACE DECIMAL ±0.005"

NUT HOLE FOR EXPO

DESCRIPTION

PART NO.		GROUP
ENGINEER	SHAWN WRIGHT	DRAWN BY
		DATE: -
MATERIAL	WEIGHT	SCALE: 1:1
		REV.

H:\ME_450\Linear Book Scanner\Fastener Example\ FILE PATH

5 4 3 2 1

SHEET 1 OF 1

SIZE
A

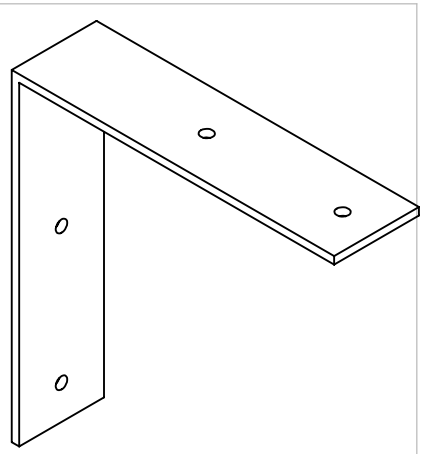

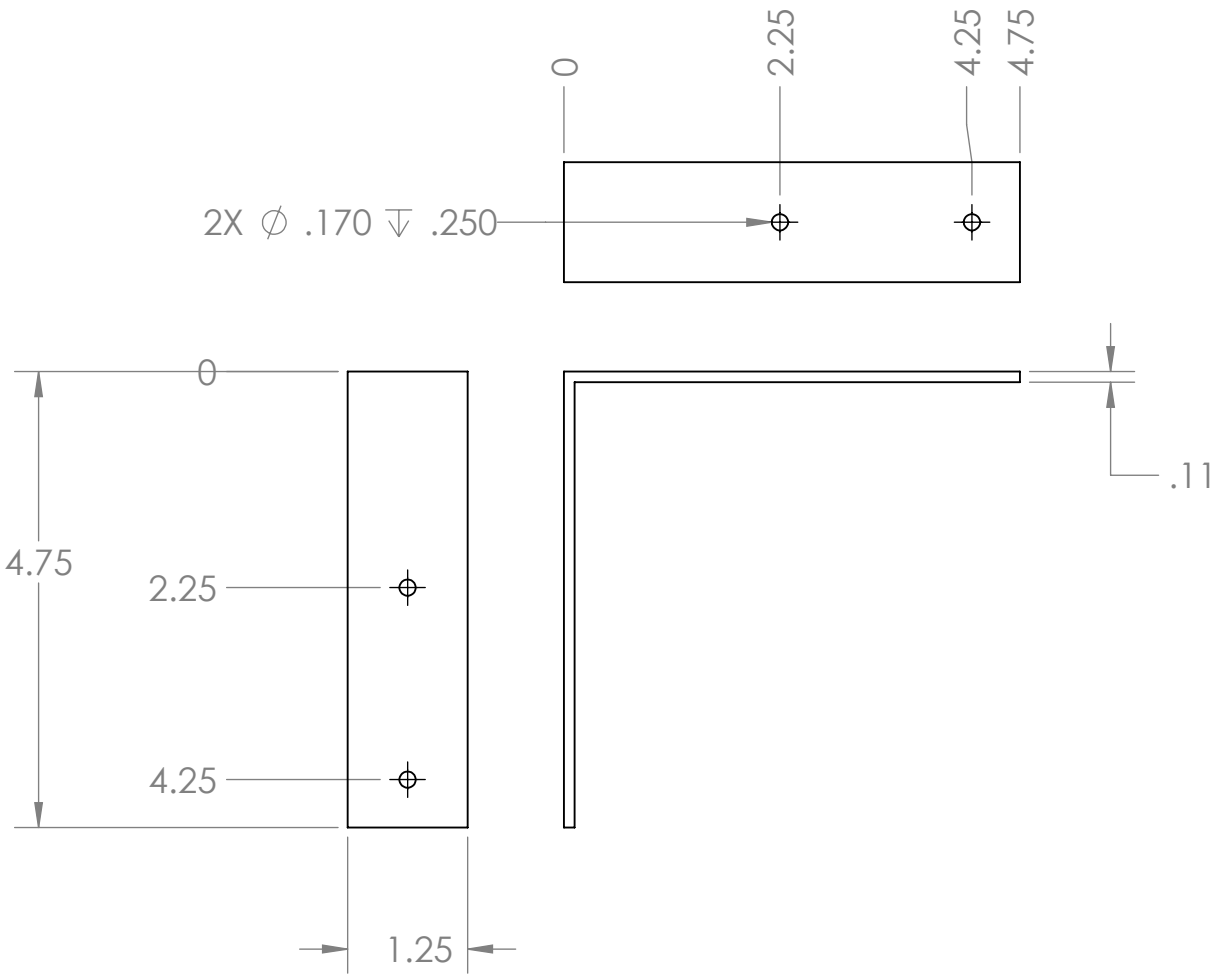

REMOVE BURRS & SHARP EDGES

UNLESS OTHERWISE SPECIFIED:
DIMENSIONS ARE IN INCHES
TOLERANCES:
FRACTIONAL ±1/32"
ANGULAR: MACH ± 2° BEND: ±1/16"
TWO PLACE DECIMAL ±0.020"
THREE PLACE DECIMAL ±0.005"

17715A68

DESCRIPTION

PART NO. | GROUP

ENGINEER | DRAWN BY SHAWN WRIGHT | DATE -

MATERIAL | WEIGHT | SCALE 1:2 | REV.

H:\ME_450\Linear Book Scanner\Saddle\ FILE PATH

5 4 3 2 1

SHEET 1 OF 1

SIZE
A

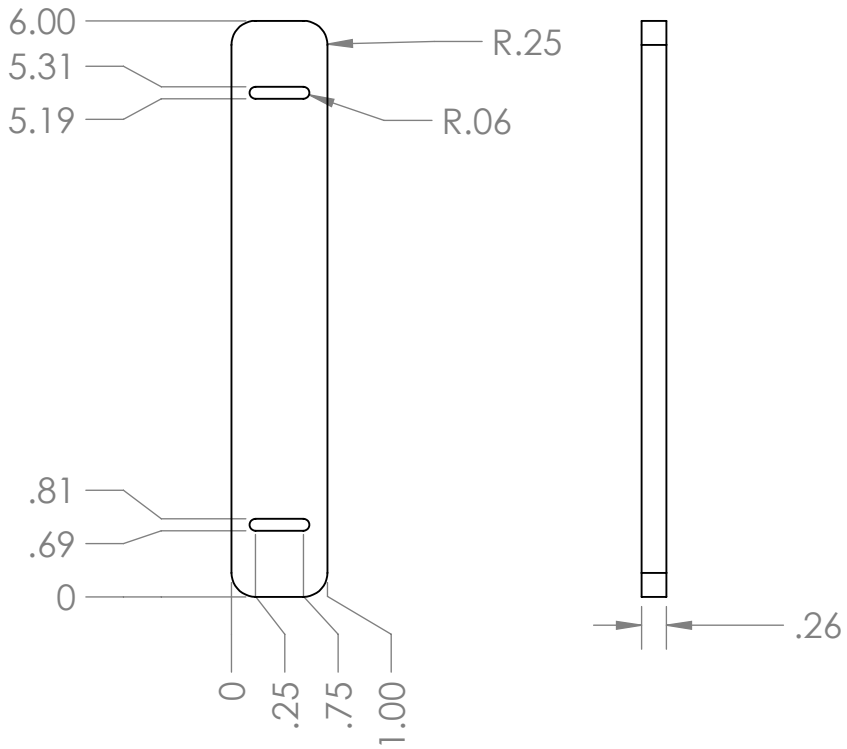

REMOVE BURRS & SHARP EDGES

UNLESS OTHERWISE SPECIFIED:
DIMENSIONS ARE IN INCHES
TOLERANCES:
FRACTIONAL ±1/32"
ANGULAR: MACH ± 2° BEND: ±1/16"
TWO PLACE DECIMAL ±0.020"
THREE PLACE DECIMAL ±0.005"

Base Spacer

DESCRIPTION

PART NO. | GROUP

ENGINEER: SHAWN WRIGHT | DRAWN BY | DATE: -

MATERIAL | WEIGHT | SCALE: 1:2 | REV.

H:\ME_450\Linear Book Scanner\Base\ FILE PATH

5 4 3 2 1

SHEET 1 OF 1

SIZE
A

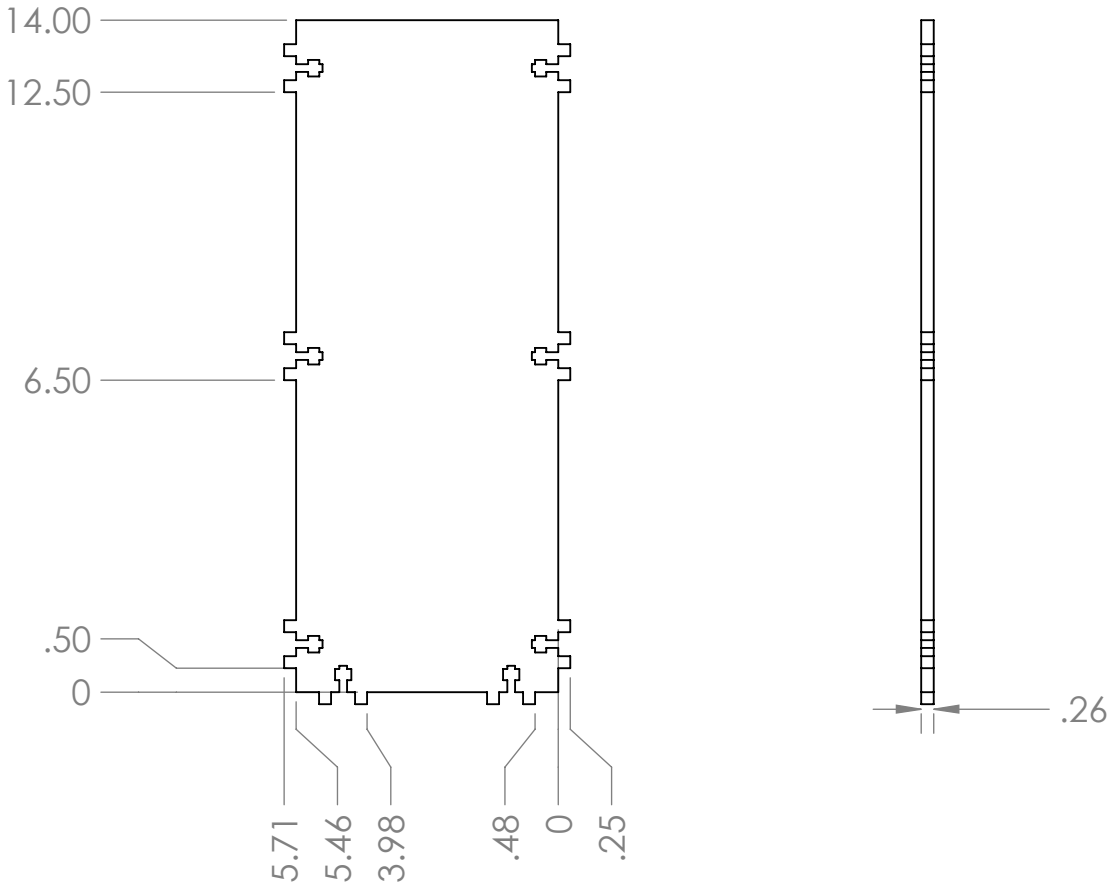

REMOVE BURRS & SHARP EDGES

UNLESS OTHERWISE SPECIFIED:
DIMENSIONS ARE IN INCHES
TOLERANCES:
FRACTIONAL ±1/32"
ANGULAR: MACH ± 2° BEND: ±1/16"
TWO PLACE DECIMAL ±0.020"
THREE PLACE DECIMAL ±0.005"

BASE, ELECTRONICS SLIDE

DESCRIPTION

PART NO.		GROUP
ENGINEER	SHAWN WRIGHT DRAWN BY	DATE
MATERIAL	WEIGHT	1:4 SCALE REV.

H:\ME_450\Linear Book Scanner\Electronics Slide\ FILE PATH

5 4 3 2 1

SHEET 1 OF 1

SIZE
A

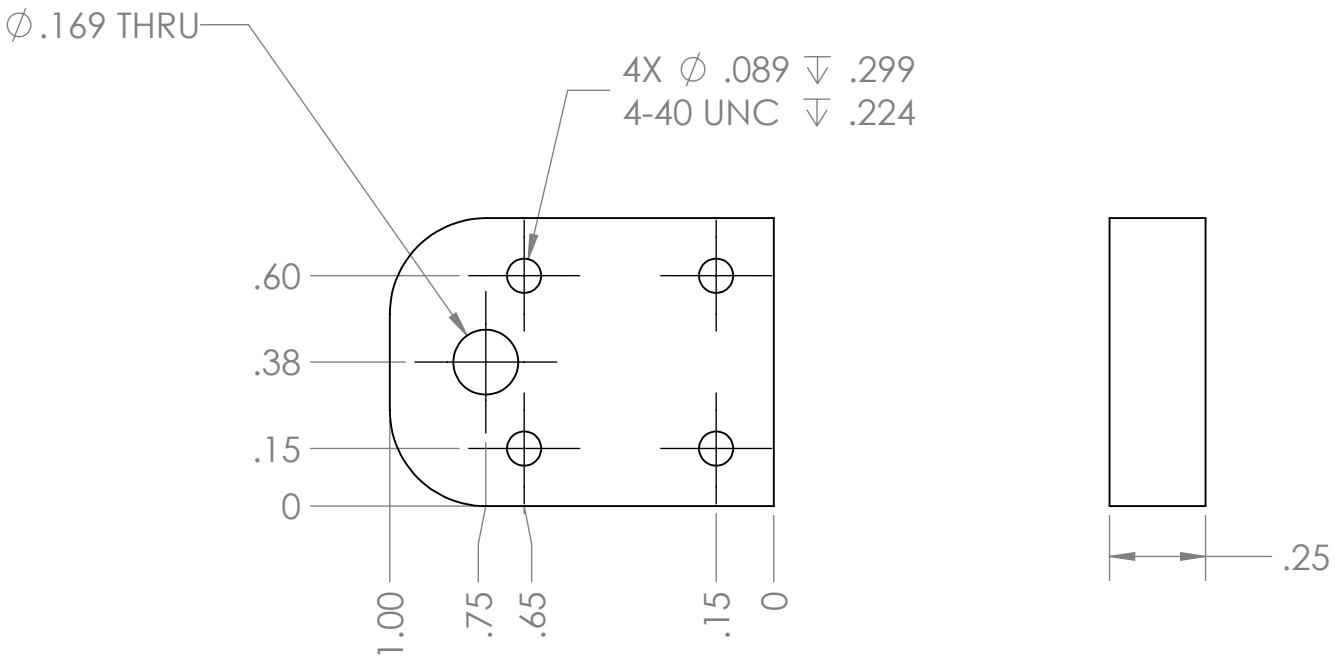

REMOVE BURRS & SHARP EDGES

UNLESS OTHERWISE SPECIFIED:
DIMENSIONS ARE IN INCHES
TOLERANCES:
FRACTIONAL ±1/32"
ANGULAR: MACH ± 2° BEND: ±1/16"
TWO PLACE DECIMAL ±0.020"
THREE PLACE DECIMAL ±0.005"

BELT MOUNT LOWER, SADDLE

DESCRIPTION

PART NO.		GROUP
ENGINEER	SHAWN WRIGHT	DRAWN BY
		DATE: -
MATERIAL	WEIGHT	SCALE: 2:1
		REV.

FILE PATH: H:\ME_450\Linear Book Scanner\Saddle\

5 4 3 2 1

SHEET 1 OF 1

SIZE
A

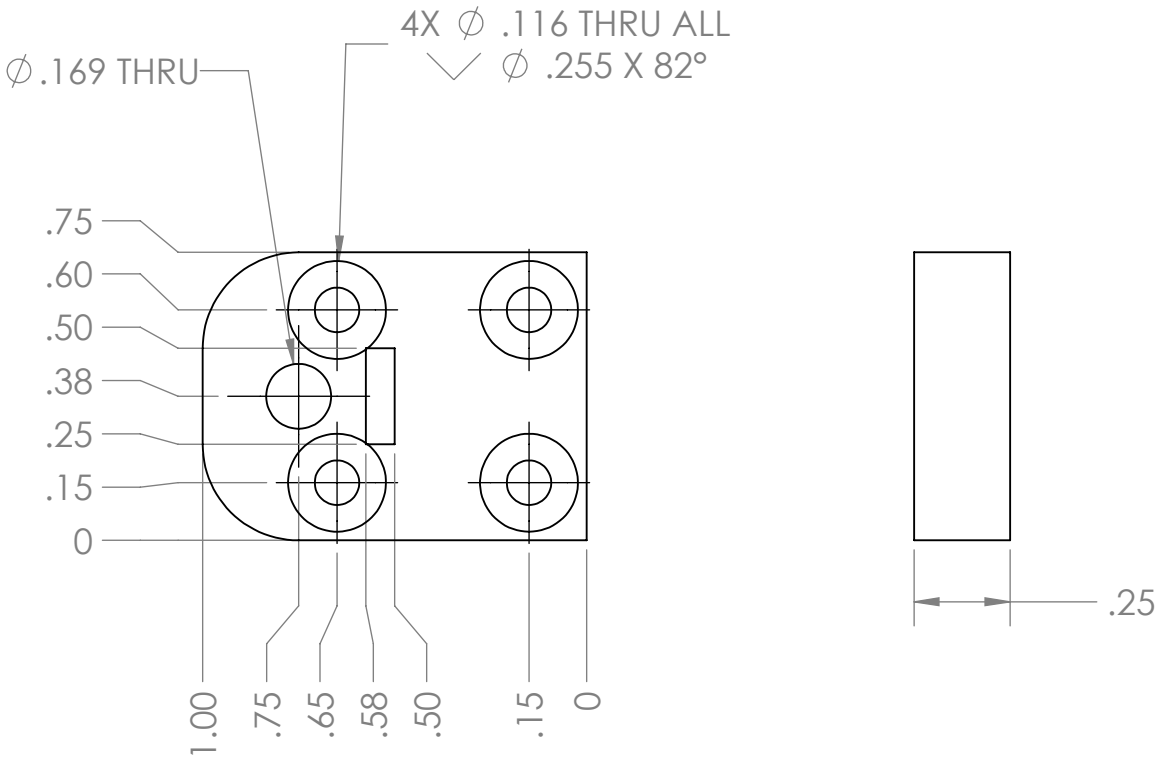

REMOVE BURRS & SHARP EDGES

UNLESS OTHERWISE SPECIFIED:
DIMENSIONS ARE IN INCHES
TOLERANCES:
FRACTIONAL ±1/32"
ANGULAR: MACH ± 2° BEND: ±1/16"
TWO PLACE DECIMAL ±0.020"
THREE PLACE DECIMAL ±0.005"

BELT MOUNT UPPER, SADDLE

DESCRIPTION

PART NO.		GROUP
ENGINEER	SHAWN WRIGHT	DRAWN BY
		DATE: -
MATERIAL	WEIGHT	SCALE: 2:1
		REV.

FILE PATH: H:\ME_450\Linear Book Scanner\Saddle\

5 4 3 2 1

SHEET 1 OF 1

SIZE
A

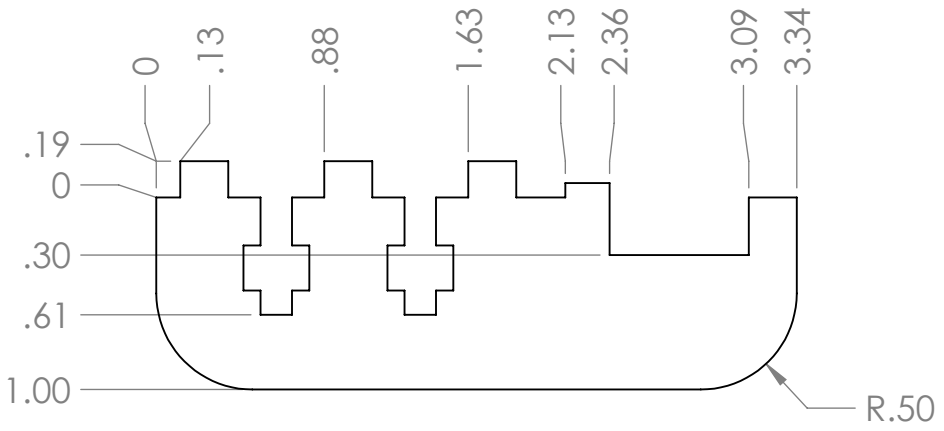

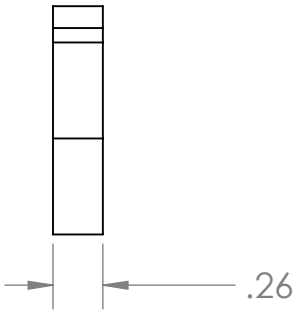

REMOVE BURRS & SHARP EDGES

UNLESS OTHERWISE SPECIFIED:
DIMENSIONS ARE IN INCHES
TOLERANCES:
FRACTIONAL ±1/32"
ANGULAR: MACH ± 2° BEND: ±1/16"
TWO PLACE DECIMAL ±0.020"
THREE PLACE DECIMAL ±0.005"

BRACKET, SCANNER BAR INFEED

DESCRIPTION

PART NO.		GROUP
ENGINEER	SHAWN WRIGHT	-
	DRAWN BY	DATE
MATERIAL	WEIGHT / SCALE 1:1	REV.

H:\ME_450\Linear Book Scanner\Scanner Bars\ FILE PATH

5 4 3 2 1

SHEET 1 OF 1

SIZE
A

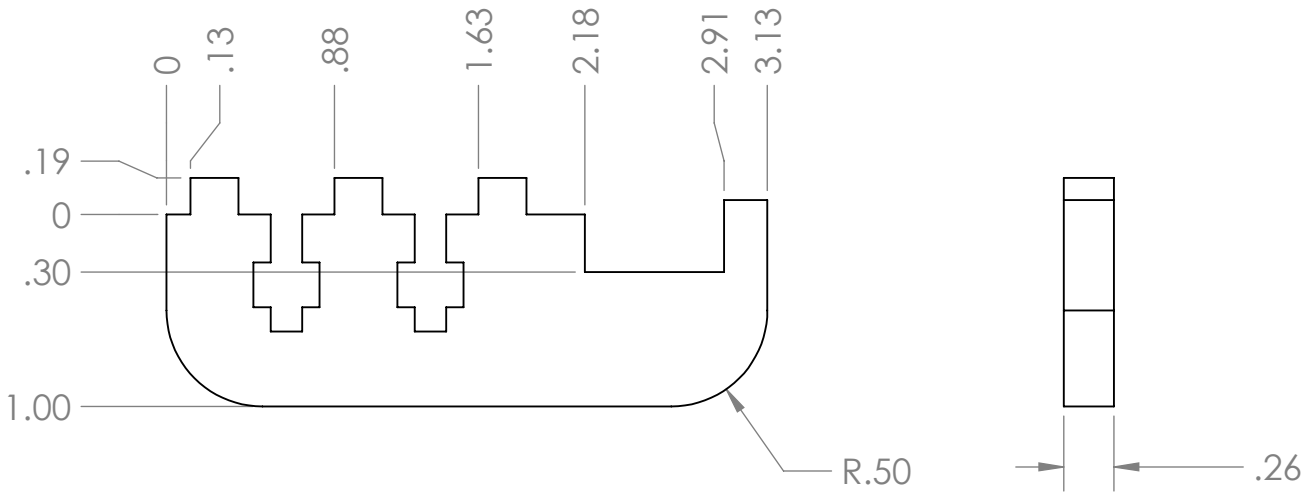

REMOVE BURRS & SHARP EDGES

UNLESS OTHERWISE SPECIFIED:
DIMENSIONS ARE IN INCHES
TOLERANCES:
FRACTIONAL ±1/32"
ANGULAR: MACH ± 2° BEND: ±1/16"
TWO PLACE DECIMAL ±0.020"
THREE PLACE DECIMAL ±0.005"

BRACKET, SCANNER BAR OUTFEED

DESCRIPTION

PART NO.		GROUP
ENGINEER	SHAWN WRIGHT	-
	DRAWN BY	DATE
MATERIAL	WEIGHT / SCALE 1:1	REV.

H:\ME_450\Linear Book Scanner\Scanner Bars\ FILE PATH

5 4 3 2 1

SHEET 1 OF 1

SIZE
A

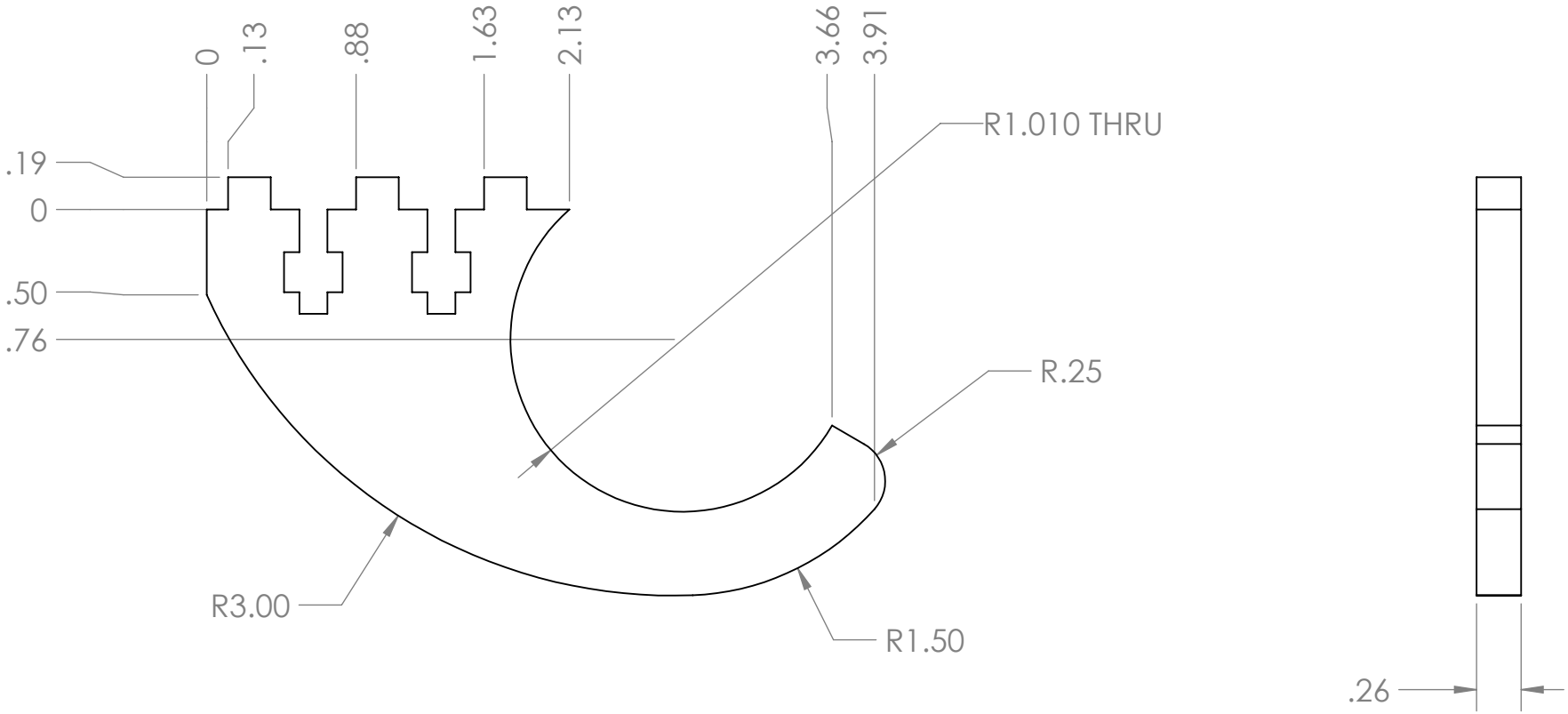

REMOVE BURRS & SHARP EDGES

UNLESS OTHERWISE SPECIFIED:
DIMENSIONS ARE IN INCHES
TOLERANCES:
FRACTIONAL ±1/32"
ANGULAR: MACH ± 2° BEND: ±1/16"
TWO PLACE DECIMAL ±0.020"
THREE PLACE DECIMAL ±0.005"

BRACKET, VACUUM TUBE

DESCRIPTION

PART NO.		GROUP
ENGINEER	SHAWN WRIGHT	DRAWN BY
		DATE: -
MATERIAL	WEIGHT	SCALE: 1:1
		REV.

H:\ME_450\Linear Book Scanner\Vacuum Tube\ FILE PATH

5 4 3 2 1

SHEET 1 OF 1

SIZE
A

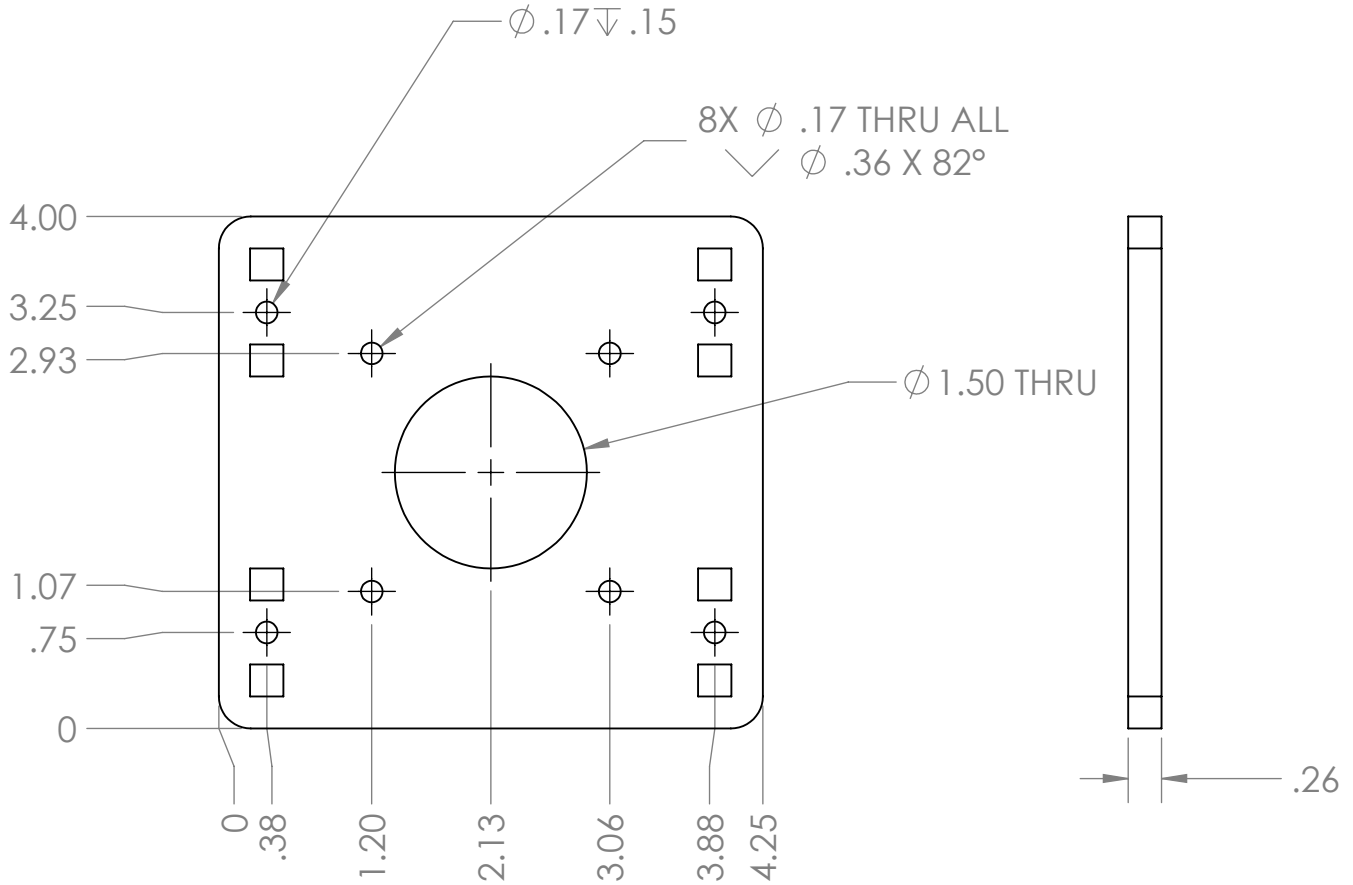

REMOVE BURRS & SHARP EDGES

UNLESS OTHERWISE SPECIFIED:
DIMENSIONS ARE IN INCHES
TOLERANCES:
FRACTIONAL ±1/32"
ANGULAR: MACH ± 2° BEND: ±1/16"
TWO PLACE DECIMAL ±0.020"
THREE PLACE DECIMAL ±0.005"

FACE, MOTOR MOUNT

DESCRIPTION

PART NO.		GROUP
ENGINEER	SHAWN WRIGHT	DRAWN BY
		DATE: -
MATERIAL	WEIGHT	SCALE: 1:2
		REV.

H:\ME_450\Linear Book Scanner\Motor Mount\ FILE PATH

5 4 3 2 1

SHEET 1 OF 1

SIZE
A

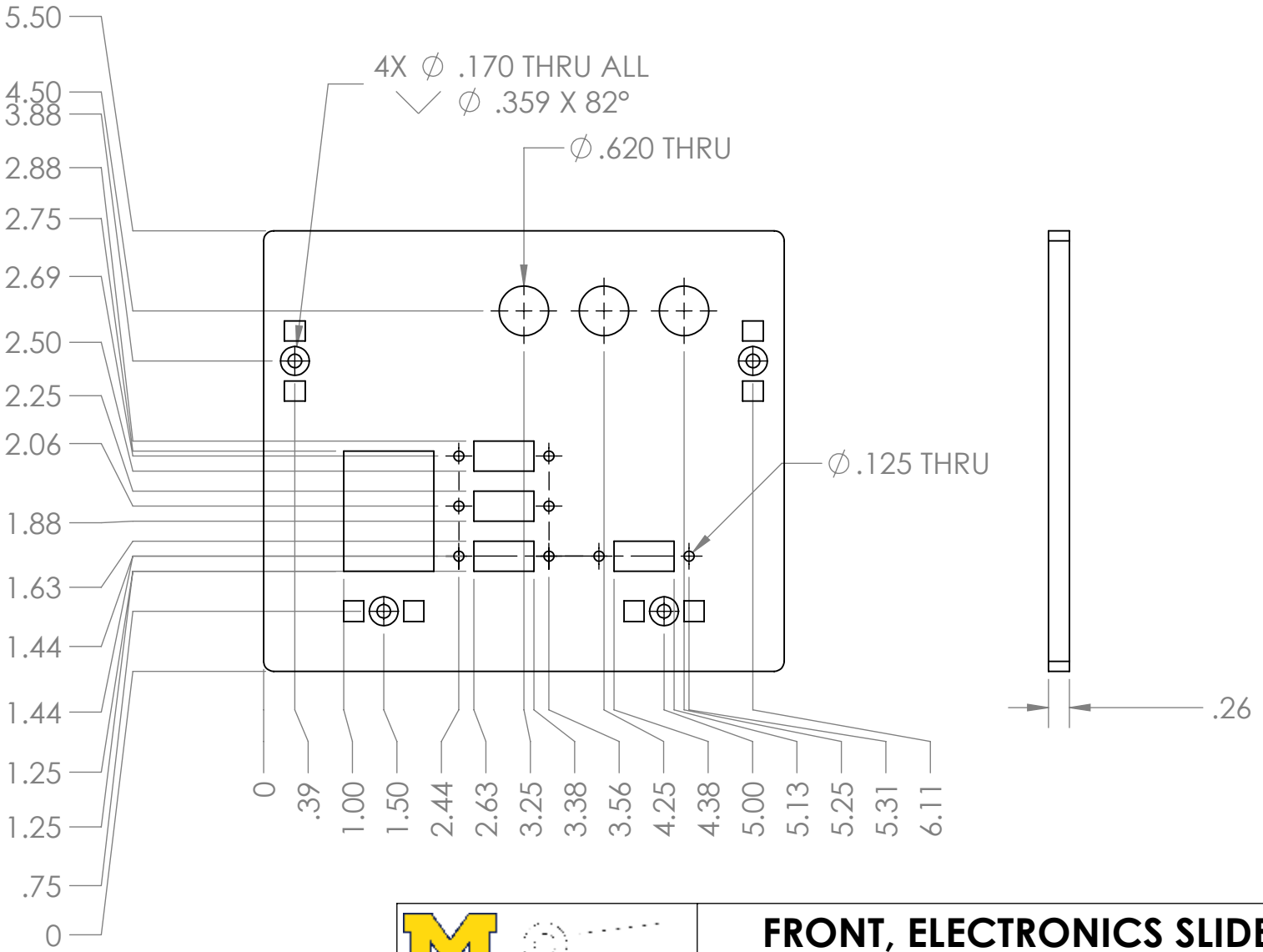

REMOVE BURRS & SHARP EDGES

UNLESS OTHERWISE SPECIFIED:
DIMENSIONS ARE IN INCHES
TOLERANCES:
FRACTIONAL ±1/32"
ANGULAR: MACH ± 2° BEND: ±1/16"
TWO PLACE DECIMAL ±0.020"
THREE PLACE DECIMAL ±0.005"

FRONT, ELECTRONICS SLIDE

DESCRIPTION

PART NO.		GROUP
ENGINEER	SHAWN WRIGHT	DRAWN BY
		DATE: -
MATERIAL	WEIGHT	SCALE: 1:4
		REV.

FILE PATH: H:\ME_450\Linear Book Scanner\Electronics Slide\

5 4 3 2 1

SHEET 1 OF 1

SIZE
A

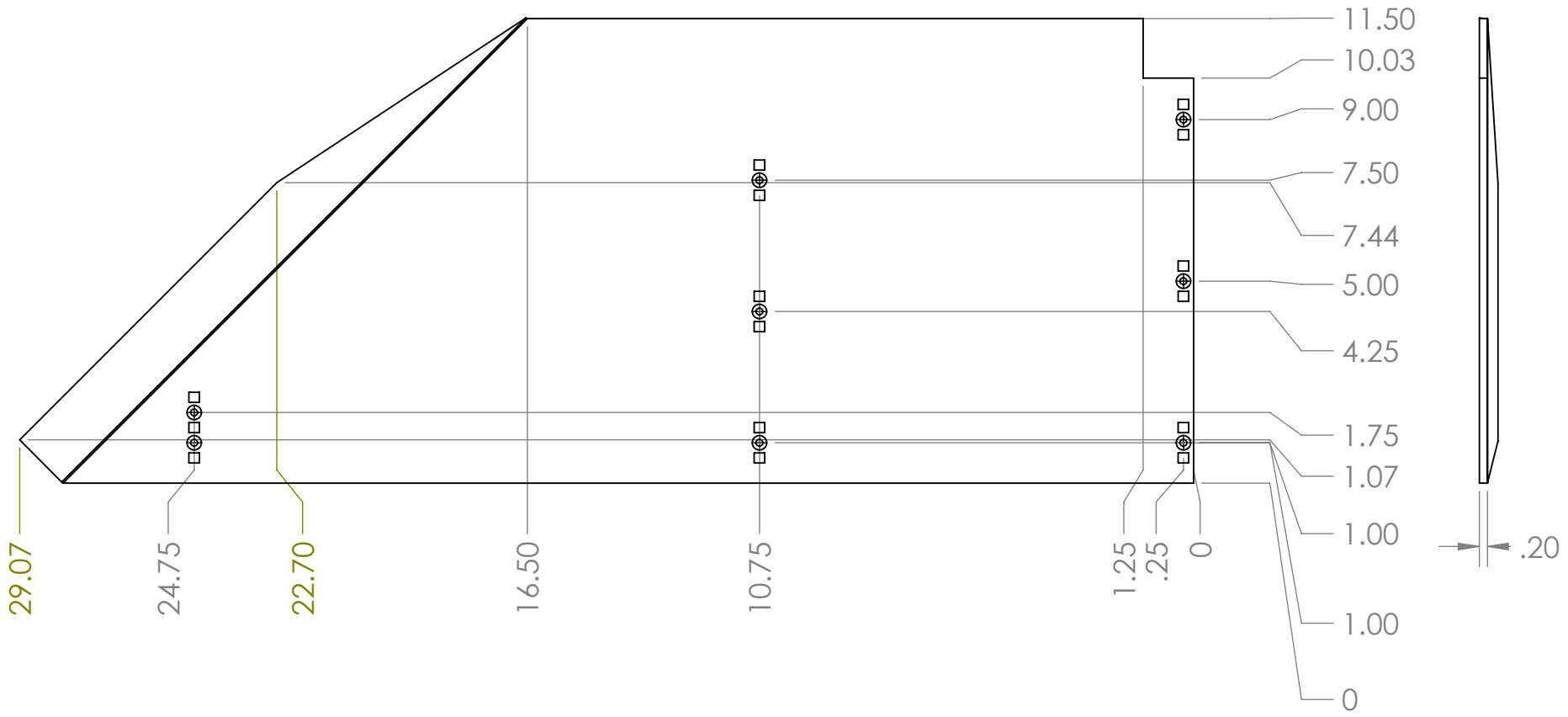

REMOVE BURRS & SHARP EDGES

UNLESS OTHERWISE SPECIFIED:
DIMENSIONS ARE IN INCHES
TOLERANCES:
FRACTIONAL ±1/32"
ANGULAR: MACH ± 2° BEND: ±1/16"
TWO PLACE DECIMAL ±0.020"
THREE PLACE DECIMAL ±0.005"

INFEED BACK, SIDE

DESCRIPTION

PART NO. | GROUP

ENGINEER: SHAWN WRIGHT | DRAWN BY | DATE: -

MATERIAL | WEIGHT | SCALE: 1:1 2 | REV.

H:\ME_450\Linear Book Scanner\Sides\ FILE PATH

5 4 3 2 1

SHEET 1 OF 1

SIZE
A

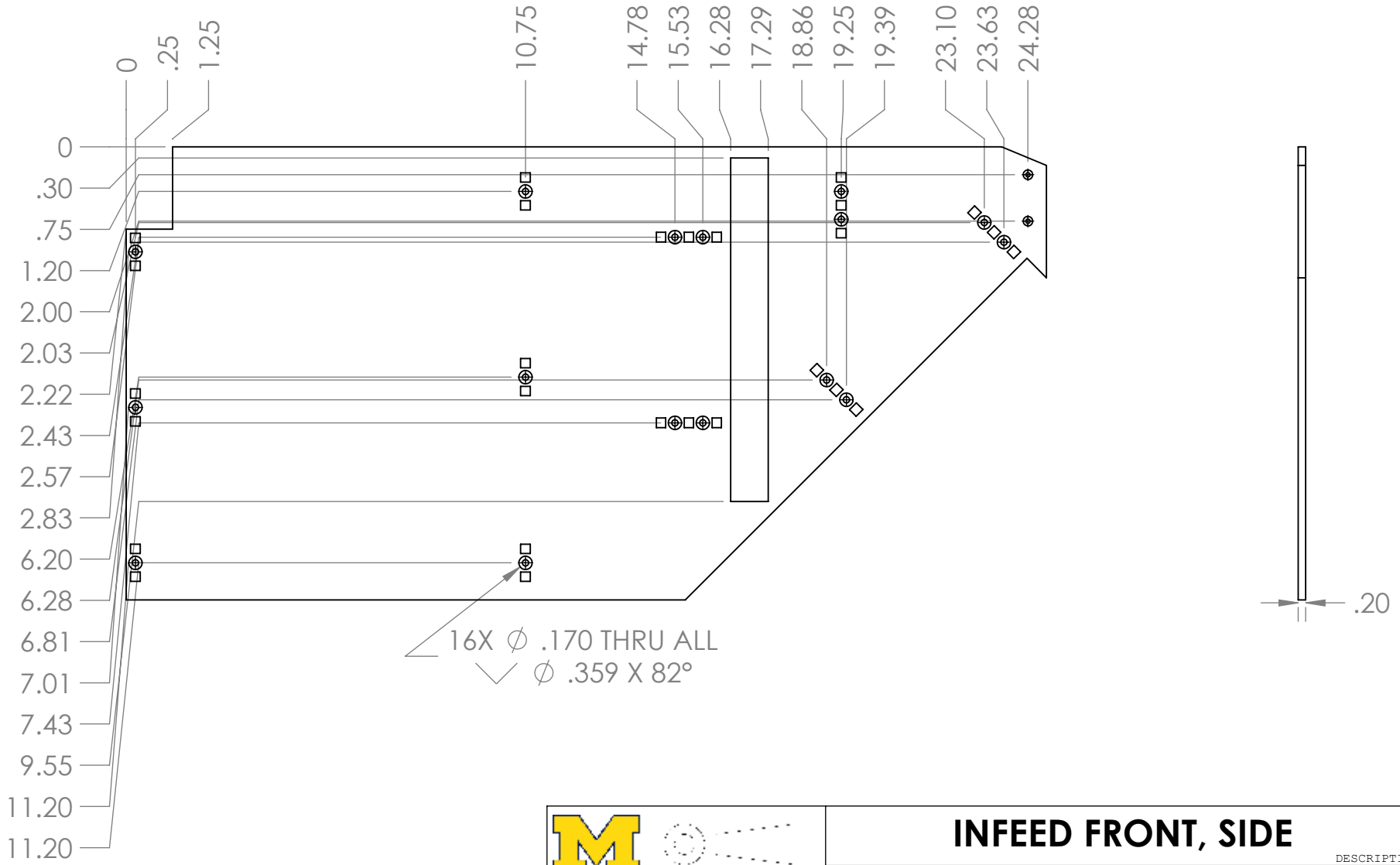

REMOVE BURRS & SHARP EDGES

UNLESS OTHERWISE SPECIFIED:
DIMENSIONS ARE IN INCHES
TOLERANCES:
FRACTIONAL ±1/32"
ANGULAR: MACH ± 2° BEND: ±1/16"
TWO PLACE DECIMAL ±0.020"
THREE PLACE DECIMAL ±0.005"

INFEED FRONT, SIDE

DESCRIPTION

PART NO. | GROUP

ENGINEER | SHAWN WRIGHT | DRAWN BY | - | DATE

MATERIAL | WEIGHT | 1:8 | SCALE | REV.

H:\ME_450\Linear Book Scanner\Sides\ FILE PATH

5 4 3 2 1

SHEET 1 OF 1

SIZE
A

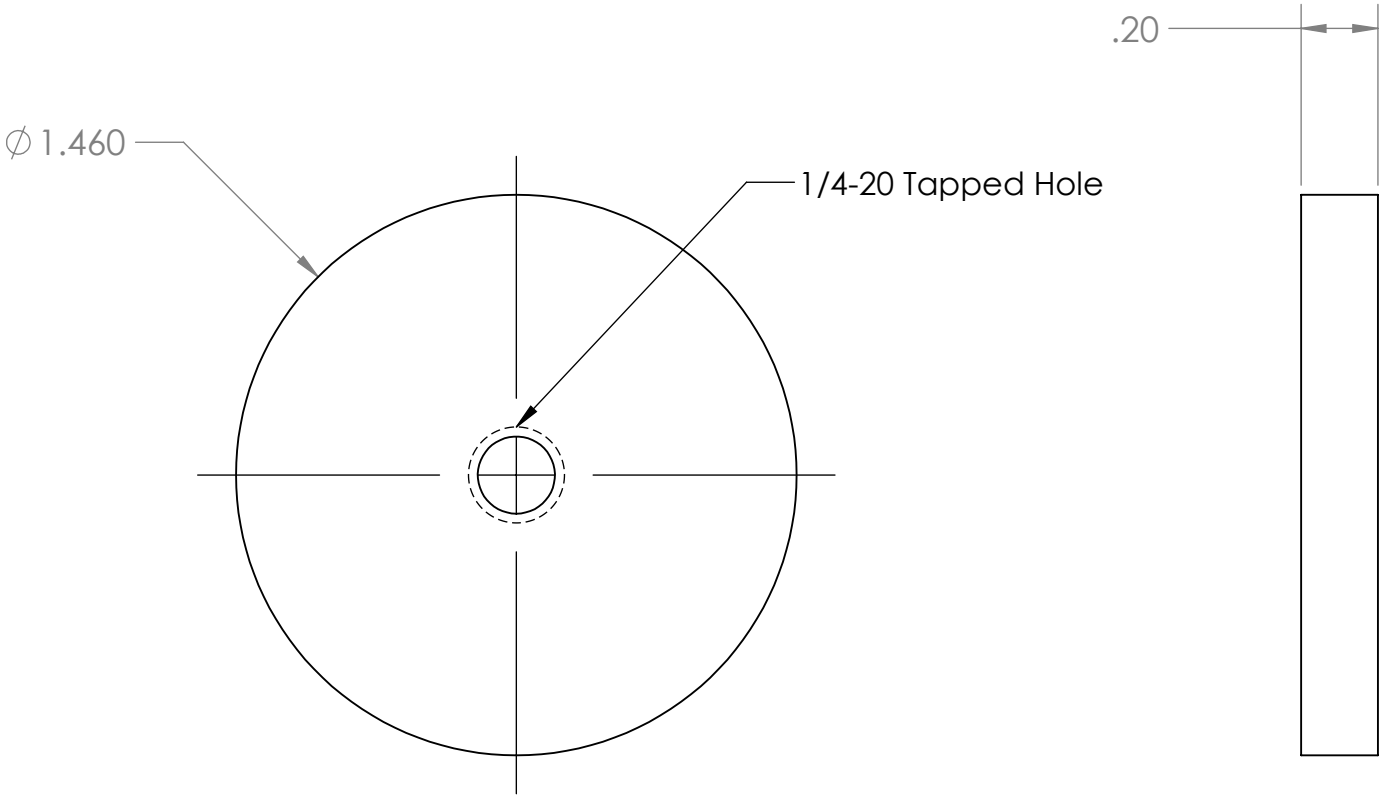

REMOVE BURRS & SHARP EDGES

UNLESS OTHERWISE SPECIFIED:
DIMENSIONS ARE IN INCHES
TOLERANCES:
FRACTIONAL ±1/32"
ANGULAR: MACH ± 2° BEND: ±1/16"
TWO PLACE DECIMAL ±0.020"
THREE PLACE DECIMAL ±0.005"

INSIDE TUBE CAP, VACUUM TUBE

DESCRIPTION

PART NO.		GROUP
ENGINEER	SHAWN WRIGHT	-
	DRAWN BY	DATE
MATERIAL	WEIGHT	2:1 SCALE / REV.

H:\ME_450\Linear Book Scanner\Vacuum Tube\ FILE PATH

5 4 3 2 1

SHEET 1 OF 1

SIZE
A

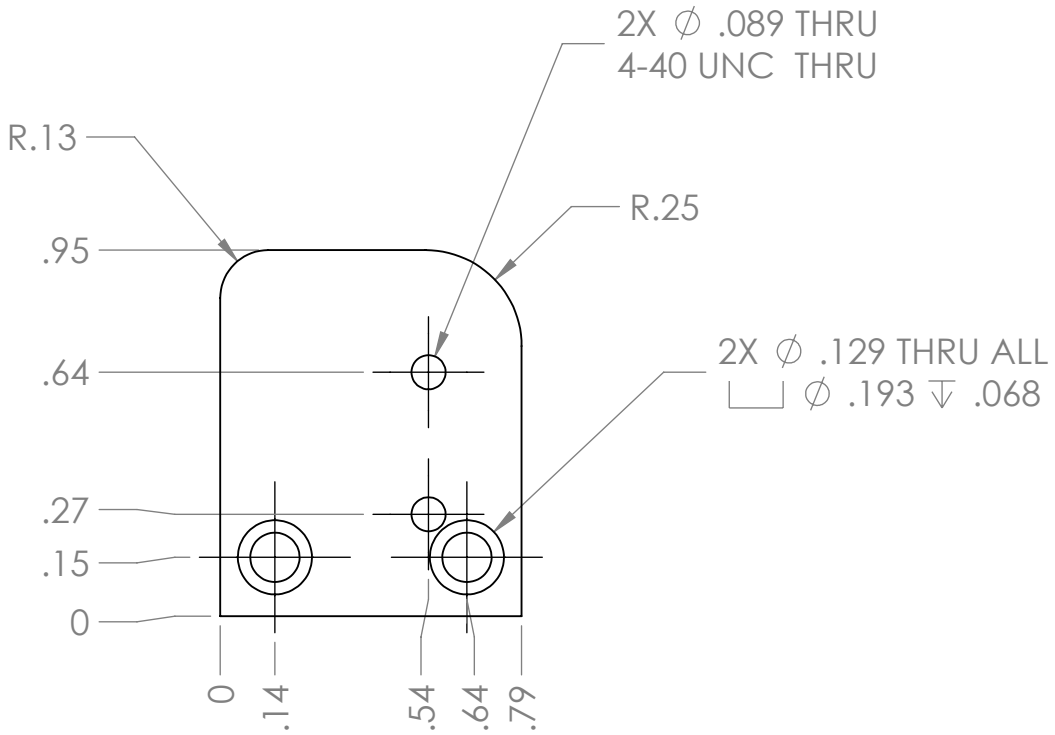

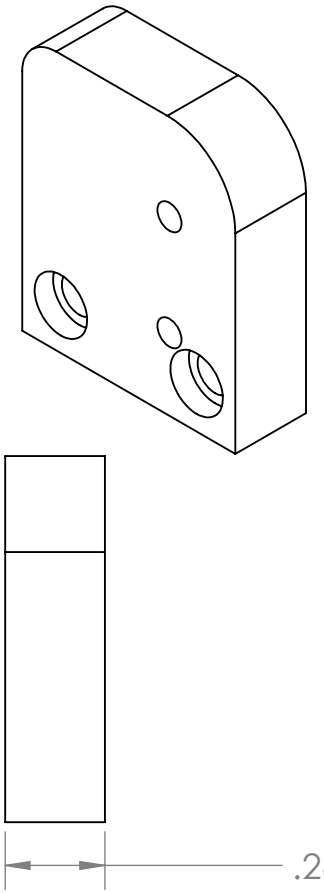

REMOVE BURRS & SHARP EDGES

UNLESS OTHERWISE SPECIFIED:
DIMENSIONS ARE IN INCHES
TOLERANCES:
FRACTIONAL ±1/32"
ANGULAR: MACH ± 2° BEND: ±1/16"
TWO PLACE DECIMAL ±0.020"
THREE PLACE DECIMAL ±0.005"

LIMIT SWITCH MOUNT, OUTFEED

DESCRIPTION

PART NO.		GROUP
ENGINEER	SHAWN WRIGHT	DRAWN BY
		DATE: -
MATERIAL	WEIGHT	SCALE: 2:1
		REV.

H:\ME_450\Linear Book Scanner\Pulleys\ FILE PATH

5 4 3 2 1

SHEET 1 OF 1

SIZE
A

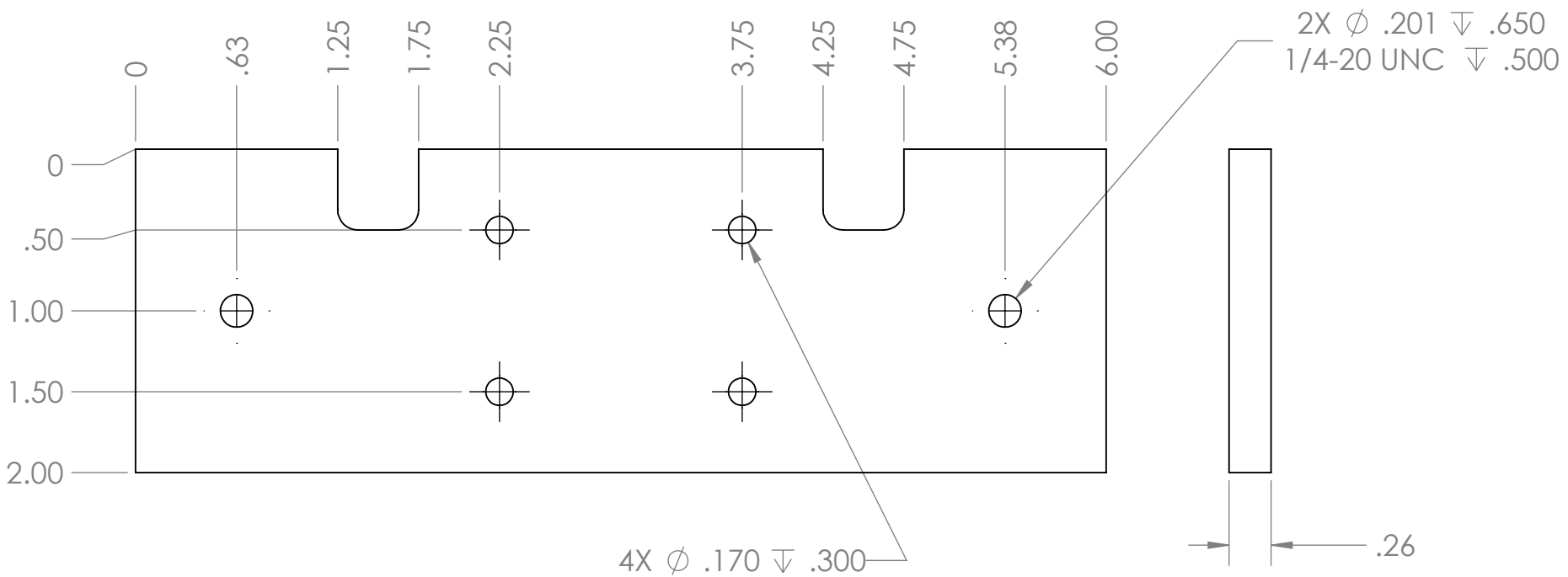

REMOVE BURRS & SHARP EDGES

UNLESS OTHERWISE SPECIFIED:
DIMENSIONS ARE IN INCHES
TOLERANCES:
FRACTIONAL ±1/32"
ANGULAR: MACH ± 2° BEND: ±1/16"
TWO PLACE DECIMAL ±0.020"
THREE PLACE DECIMAL ±0.005"

LINK, SADDLE

DESCRIPTION

PART NO.		GROUP
ENGINEER	SHAWN WRIGHT	DRAWN BY
		DATE: -
MATERIAL	WEIGHT	SCALE: 1:2
		REV.

H:\ME_450\Linear Book Scanner\Saddle\ FILE PATH

5 4 3 2 1

SHEET 1 OF 1

SIZE
A

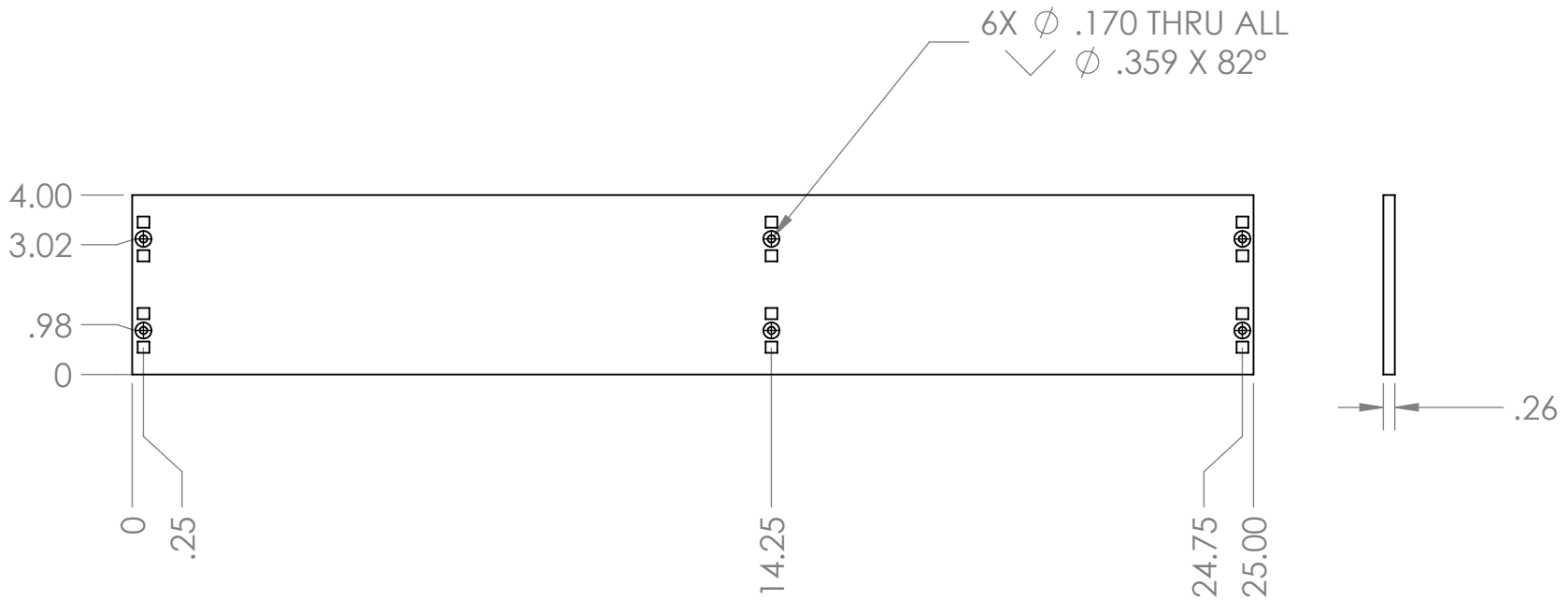

REMOVE BURRS & SHARP EDGES

UNLESS OTHERWISE SPECIFIED:
DIMENSIONS ARE IN INCHES
TOLERANCES:
FRACTIONAL ±1/32"
ANGULAR: MACH ± 2° BEND: ±1/16"
TWO PLACE DECIMAL ±0.020"
THREE PLACE DECIMAL ±0.005"

LOWER INFEED BACK RIB, FRAME

DESCRIPTION

PART NO.		GROUP
ENGINEER	SHAWN WRIGHT	DRAWN BY
		DATE: -
MATERIAL	WEIGHT	SCALE: 1:8
		REV.

H:\ME_450\Linear Book Scanner\Frame\ FILE PATH

5 4 3 2 1

SHEET 1 OF 1

SIZE
A

REMOVE BURRS & SHARP EDGES

UNLESS OTHERWISE SPECIFIED:
DIMENSIONS ARE IN INCHES
TOLERANCES:
FRACTIONAL ±1/32"
ANGULAR: MACH ± 2° BEND: ±1/16"
TWO PLACE DECIMAL ±0.020"
THREE PLACE DECIMAL ±0.005"

LOWER INFEED FRONT RIB, FRAME

DESCRIPTION

PART NO. | GROUP

ENGINEER | SHAWN WRIGHT | DRAWN BY | - | DATE

MATERIAL | WEIGHT | 1:4 SCALE | REV.

H:\ME_450\Linear Book Scanner\Frame\ FILE PATH

5 4 3 2 1

SHEET 1 OF 1

SIZE
A

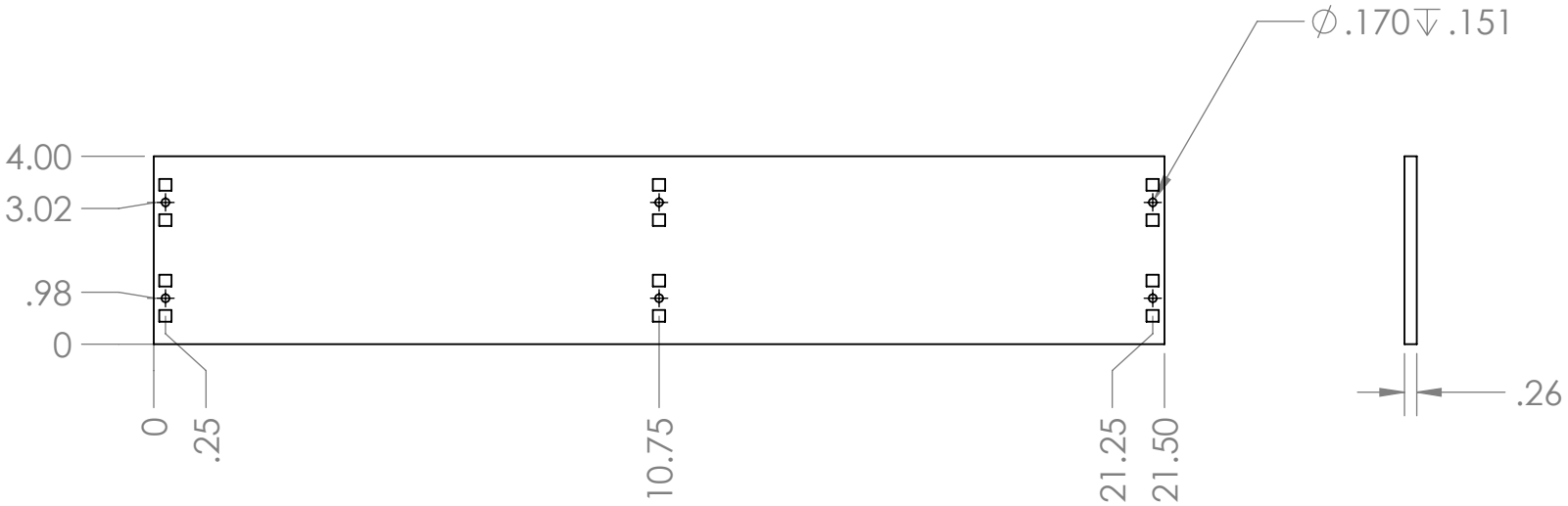

REMOVE BURRS & SHARP EDGES

UNLESS OTHERWISE SPECIFIED:
DIMENSIONS ARE IN INCHES
TOLERANCES:
FRACTIONAL ±1/32"
ANGULAR: MACH ± 2° BEND: ±1/16"
TWO PLACE DECIMAL ±0.020"
THREE PLACE DECIMAL ±0.005"

LOWER OUTFEED BACK RIB, FRAME

DESCRIPTION

PART NO.		GROUP
ENGINEER	SHAWN WRIGHT	DRAWN BY
		DATE: -
MATERIAL	WEIGHT	SCALE: 1:8
		REV.

FILE PATH: H:\ME_450\Linear Book Scanner\Frame\

5 4 3 2 1

SHEET 1 OF 1

SIZE
A

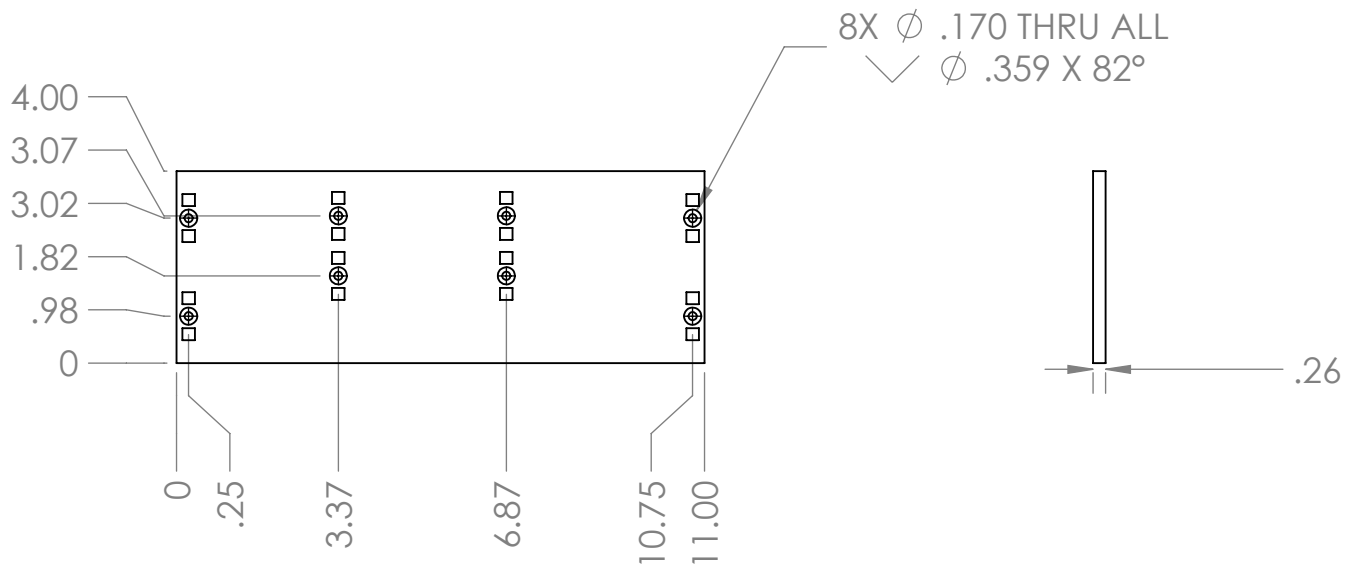

REMOVE BURRS & SHARP EDGES

UNLESS OTHERWISE SPECIFIED:
DIMENSIONS ARE IN INCHES
TOLERANCES:
FRACTIONAL ±1/32"
ANGULAR: MACH ± 2° BEND: ±1/16"
TWO PLACE DECIMAL ±0.020"
THREE PLACE DECIMAL ±0.005"

LOWER OUTFEED FRONT RIB, FRAME

DESCRIPTION

PART NO.		GROUP
ENGINEER	SHAWN WRIGHT	DRAWN BY
		DATE: -
MATERIAL	WEIGHT	SCALE: 1:4
		REV.

H:\ME_450\Linear Book Scanner\Frame\ FILE PATH

5 4 3 2 1

SHEET 1 OF 1

SIZE
A

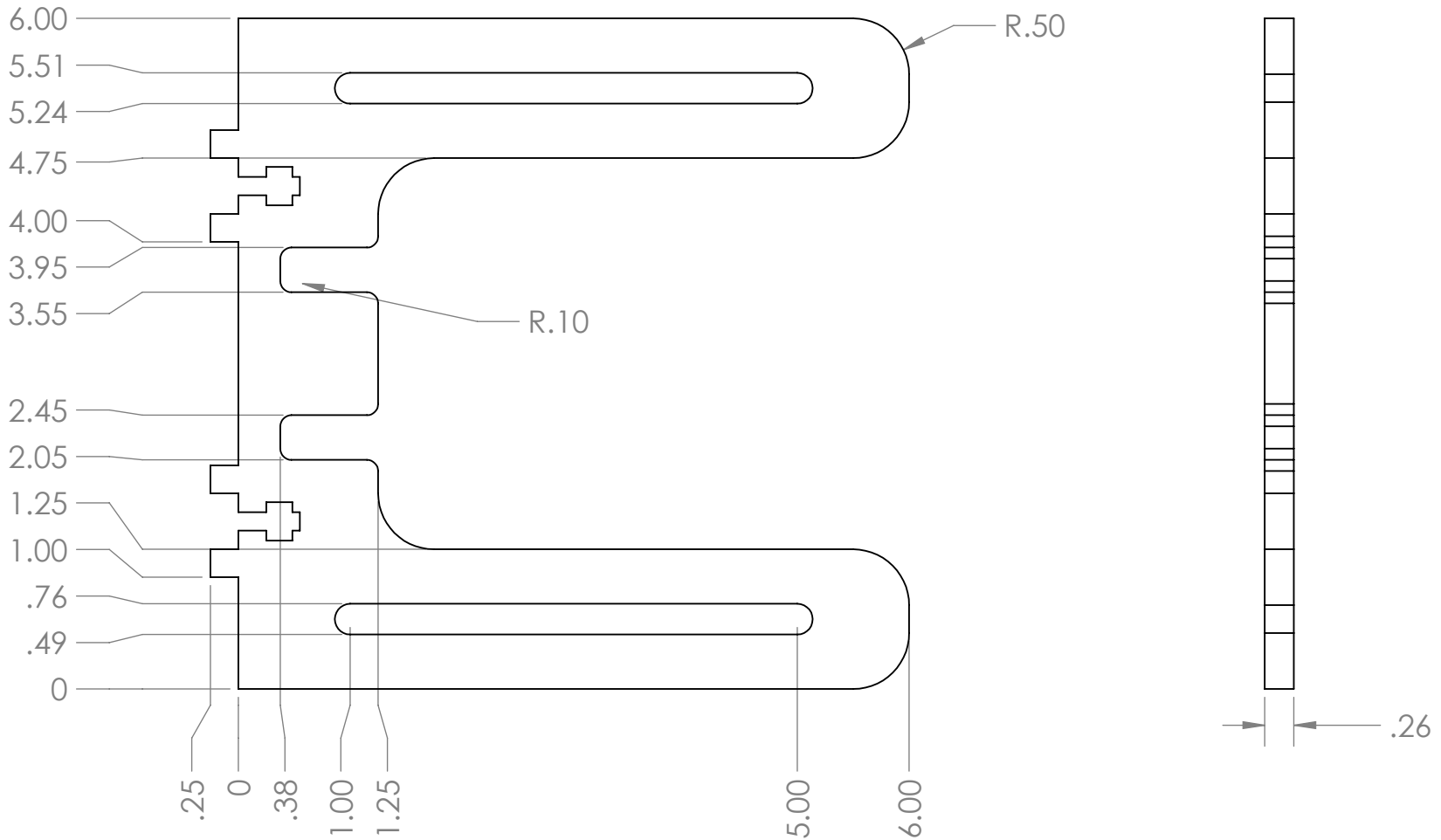

REMOVE BURRS & SHARP EDGES

UNLESS OTHERWISE SPECIFIED:
DIMENSIONS ARE IN INCHES
TOLERANCES:
FRACTIONAL ±1/32"
ANGULAR: MACH ± 2° BEND: ±1/16"
TWO PLACE DECIMAL ±0.020"
THREE PLACE DECIMAL ±0.005"

LOWER PADDLE SLIDE, SADDLE

DESCRIPTION

PART NO.		GROUP
ENGINEER	SHAWN WRIGHT	DRAWN BY
		DATE: -
MATERIAL	WEIGHT	SCALE: 1:4
		REV.

H:\ME_450\Linear Book Scanner\Saddle\ FILE PATH

5 4 3 2 1

SHEET 1 OF 1

SIZE
A

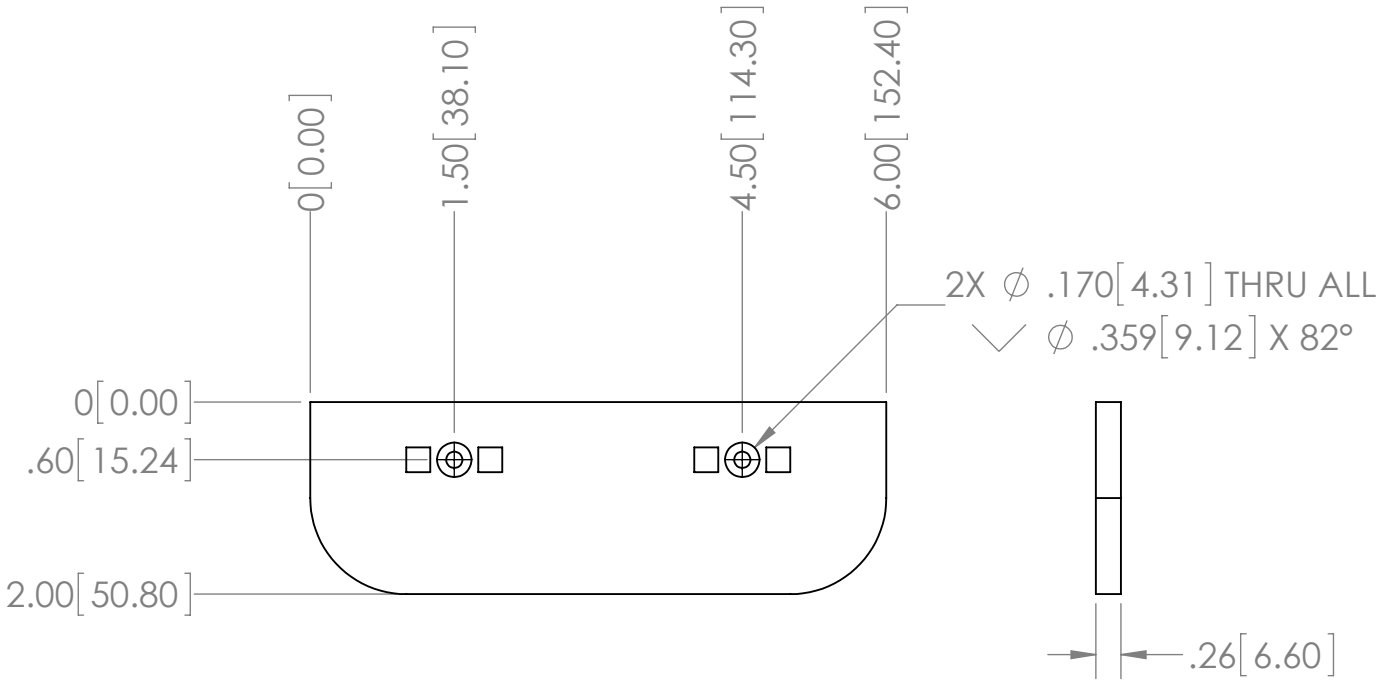

REMOVE BURRS & SHARP EDGES

UNLESS OTHERWISE SPECIFIED:
DIMENSIONS ARE IN INCHES
TOLERANCES:
FRACTIONAL ±1/32"
ANGULAR: MACH ± 2° BEND: ±1/16"
TWO PLACE DECIMAL ±0.020"
THREE PLACE DECIMAL ±0.005"

LOWER PADDLE, SADDLE

DESCRIPTION

PART NO.		GROUP
ENGINEER	SHAWN WRIGHT	DRAWN BY
		DATE: -
MATERIAL	WEIGHT	SCALE: 1:2
		REV.

H:\ME_450\Linear Book Scanner\Saddle\ FILE PATH

5 4 3 2 1

SHEET 1 OF 1

SIZE
A

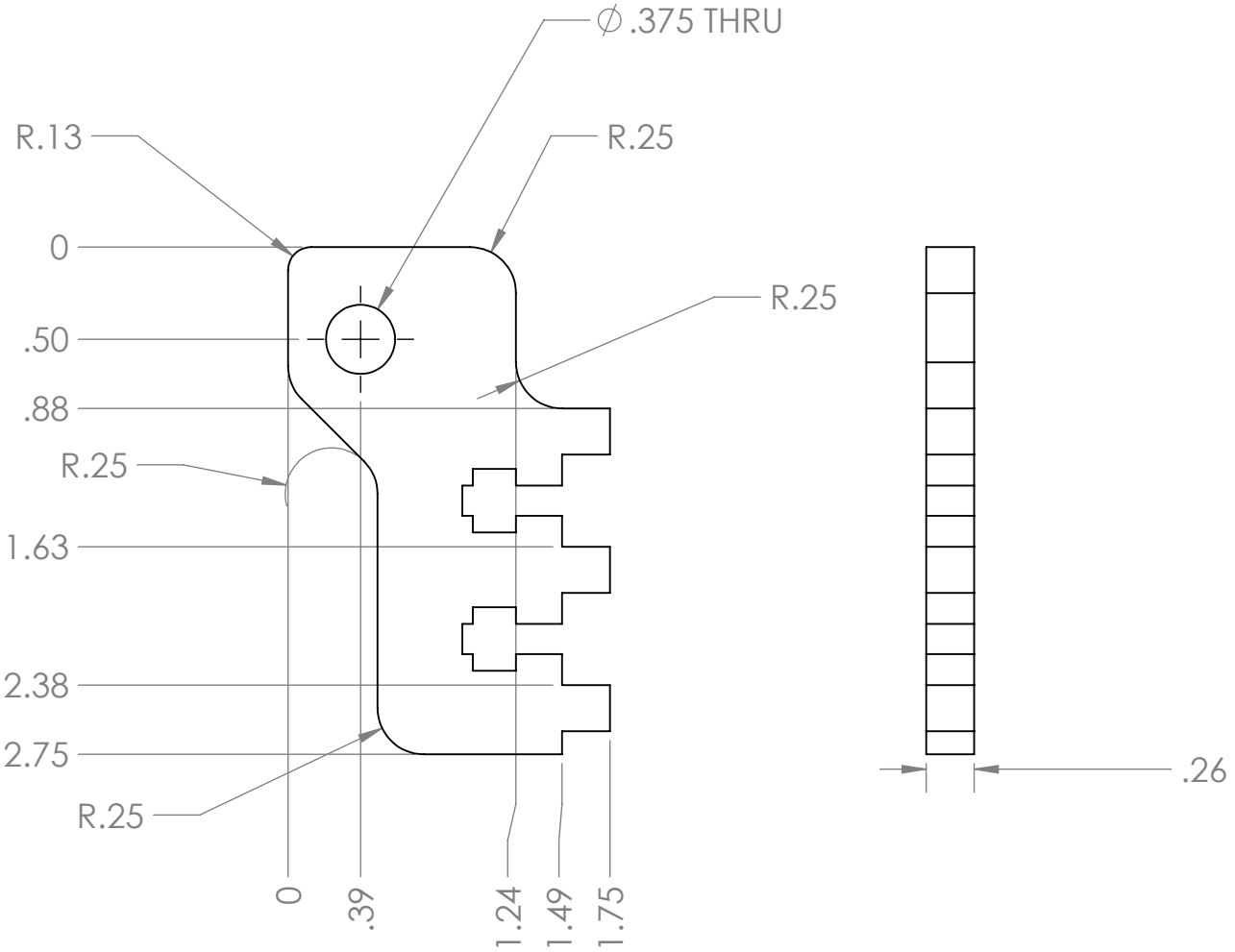

REMOVE BURRS & SHARP EDGES

UNLESS OTHERWISE SPECIFIED:
DIMENSIONS ARE IN INCHES
TOLERANCES:
FRACTIONAL ±1/32"
ANGULAR: MACH ± 2° BEND: ±1/16"
TWO PLACE DECIMAL ±0.020"
THREE PLACE DECIMAL ±0.005"

MOUNT OFFSET, PULLY

DESCRIPTION

PART NO.		GROUP
ENGINEER	SHAWN WRIGHT	DRAWN BY
		DATE: -
MATERIAL	WEIGHT	SCALE: 1:1
		REV.

FILE PATH: H:\ME_450\Linear Book Scanner\Pulleys\

5 4 3 2 1

SHEET 1 OF 1

SIZE
A

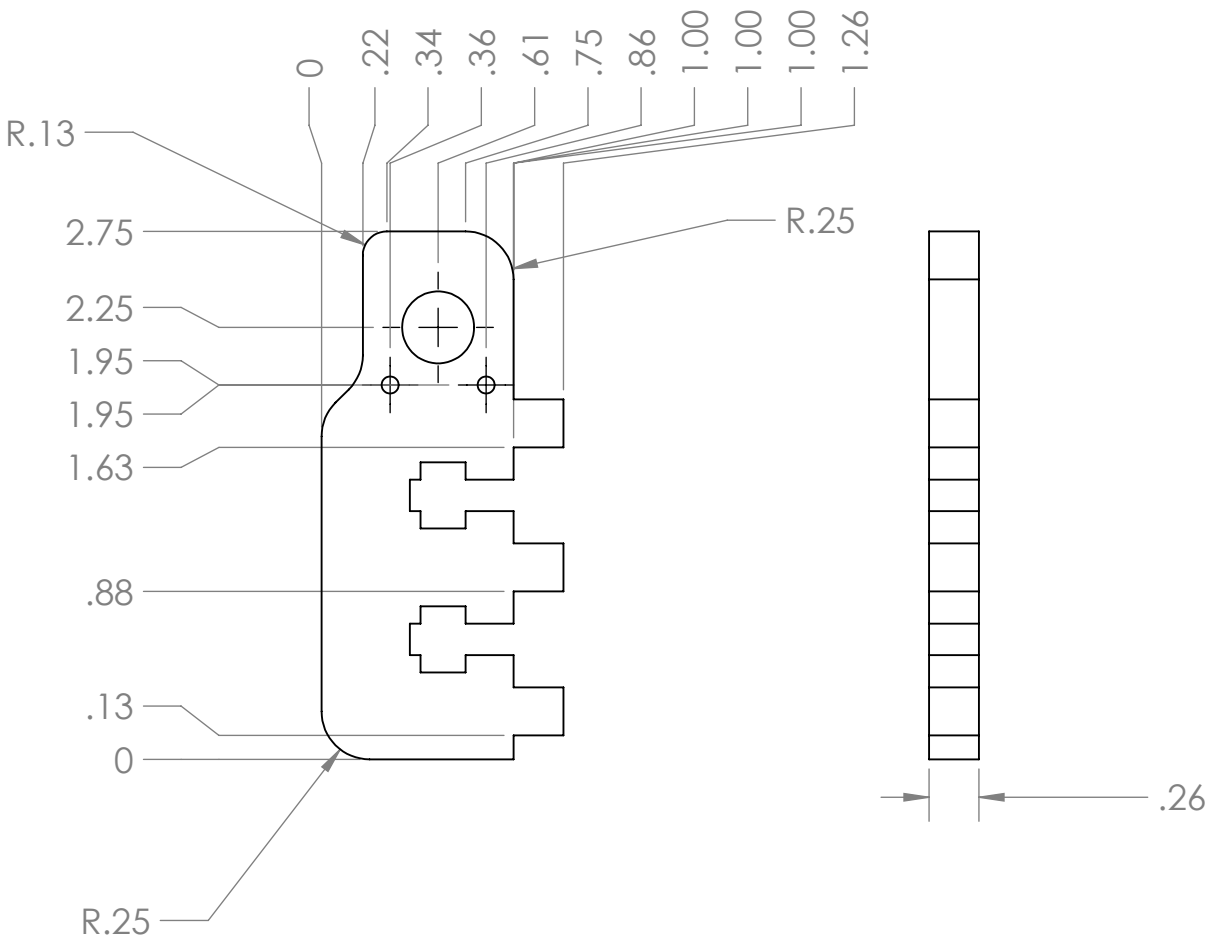

REMOVE BURRS & SHARP EDGES

UNLESS OTHERWISE SPECIFIED:
DIMENSIONS ARE IN INCHES
TOLERANCES:
FRACTIONAL ±1/32"
ANGULAR: MACH ± 2° BEND: ±1/16"
TWO PLACE DECIMAL ±0.020"
THREE PLACE DECIMAL ±0.005"

MOUNT, PULLY

DESCRIPTION

PART NO.		GROUP
ENGINEER	SHAWN WRIGHT	DRAWN BY
		DATE: -
MATERIAL	WEIGHT	SCALE: 1:1
		REV.

H:\ME_450\Linear Book Scanner\Pulleys\ FILE PATH

5 4 3 2 1

SHEET 1 OF 1

SIZE
A

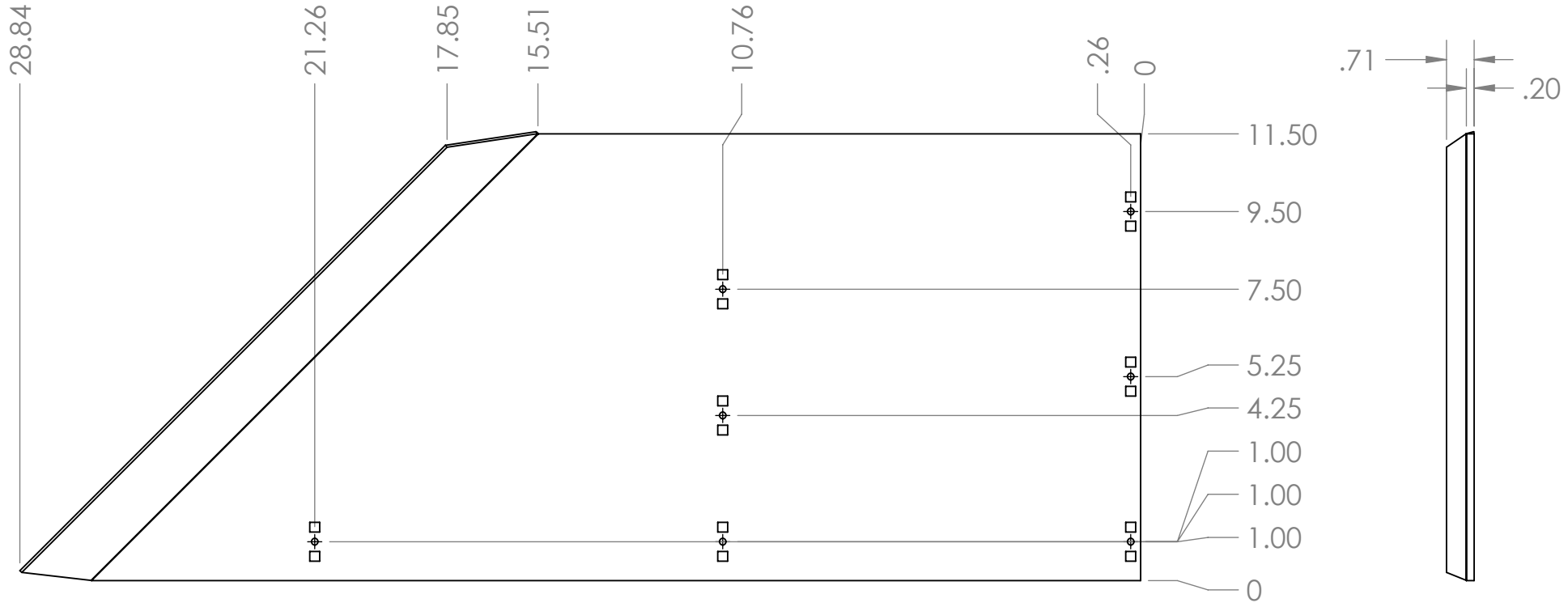

REMOVE BURRS & SHARP EDGES

UNLESS OTHERWISE SPECIFIED:
DIMENSIONS ARE IN INCHES
TOLERANCES:
FRACTIONAL ±1/32"
ANGULAR: MACH ± 2° BEND: ±1/16"
TWO PLACE DECIMAL ±0.020"
THREE PLACE DECIMAL ±0.005"

OUTFEED BACK, SIDE

DESCRIPTION

PART NO.		GROUP
ENGINEER	SHAWN WRIGHT	DRAWN BY
		DATE: -
MATERIAL	WEIGHT	SCALE
		REV.

H:\ME_450\Linear Book Scanner\Sides\ FILE PATH

5 4 3 2 1

SHEET 1 OF 1

SIZE
A

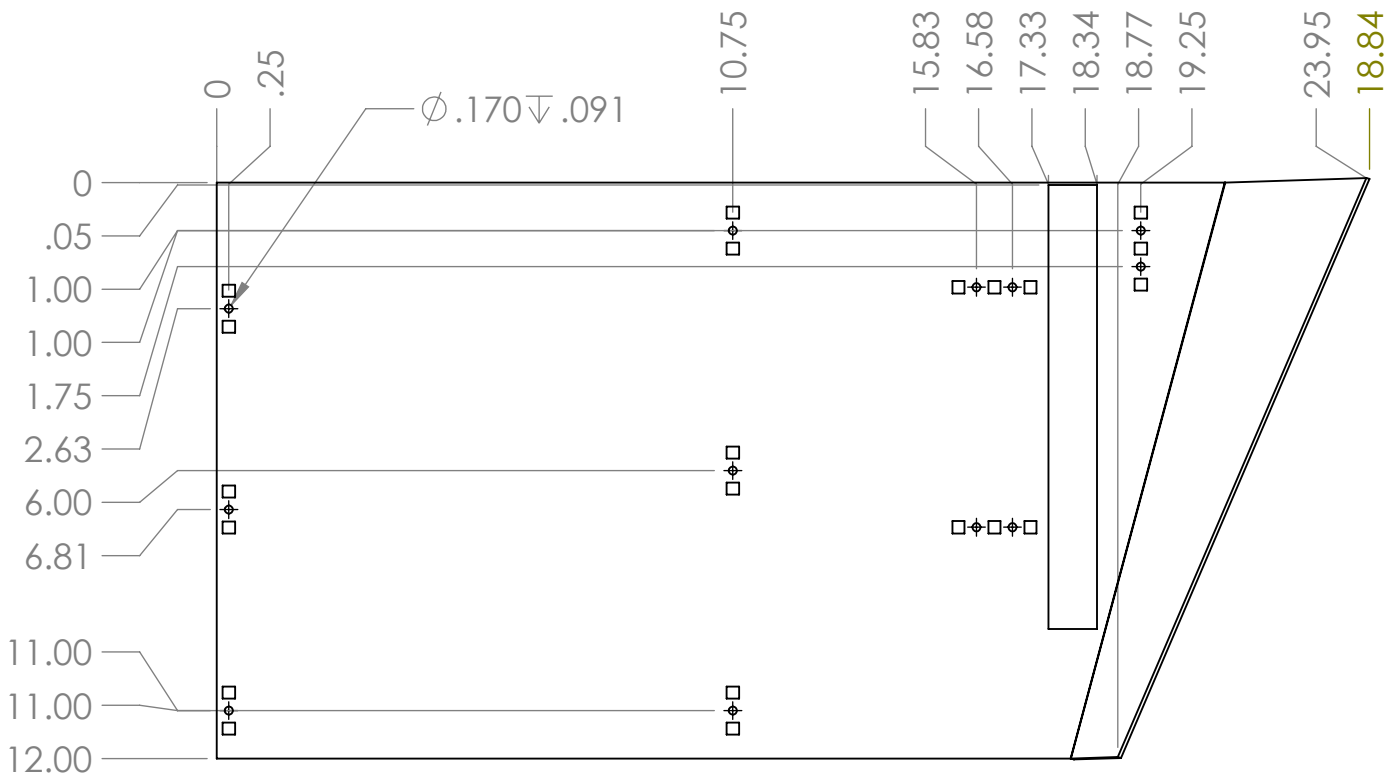

REMOVE BURRS & SHARP EDGES

UNLESS OTHERWISE SPECIFIED:
DIMENSIONS ARE IN INCHES
TOLERANCES:
FRACTIONAL ±1/32"
ANGULAR: MACH ± 2° BEND: ±1/16"
TWO PLACE DECIMAL ±0.020"
THREE PLACE DECIMAL ±0.005"

OUTFEED FRONT, SIDE

DESCRIPTION

PART NO. | GROUP

ENGINEER: SHAWN WRIGHT | DRAWN BY | DATE: -

MATERIAL | WEIGHT | SCALE: 1:8 | REV.

FILE PATH: H:\ME_450\Linear Book Scanner\Sides\

5 4 3 2 1

SHEET 1 OF 1

SIZE
A

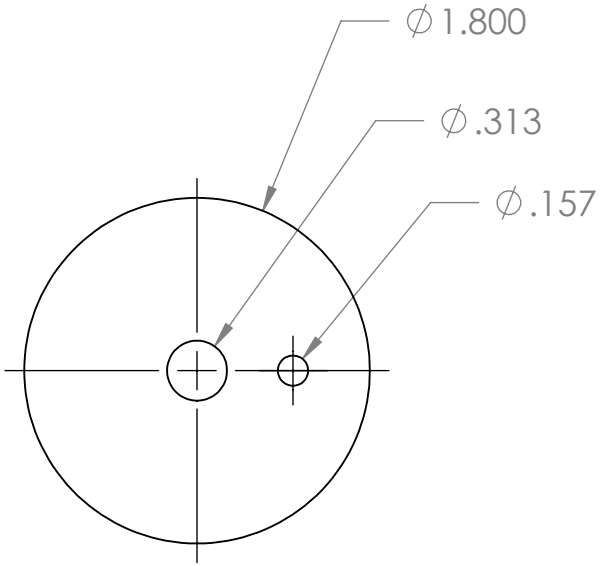

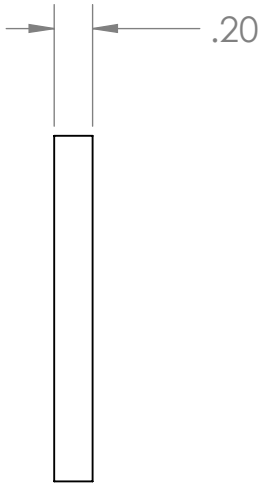

REMOVE BURRS & SHARP EDGES

UNLESS OTHERWISE SPECIFIED:
DIMENSIONS ARE IN INCHES
TOLERANCES:
FRACTIONAL ±1/32"
ANGULAR: MACH ± 2° BEND: ±1/16"
TWO PLACE DECIMAL ±0.020"
THREE PLACE DECIMAL ±0.005"

OUTSIDE TUBE CAP, VACUUM TUBE

DESCRIPTION

PART NO.		GROUP
ENGINEER	SHAWN WRIGHT	-
	DRAWN BY	DATE
MATERIAL	WEIGHT	1:1 SCALE / REV.

H:\ME_450\Linear Book Scanner\Vacuum Tube\ FILE PATH

5 4 3 2 1

SHEET 1 OF 1

SIZE
A

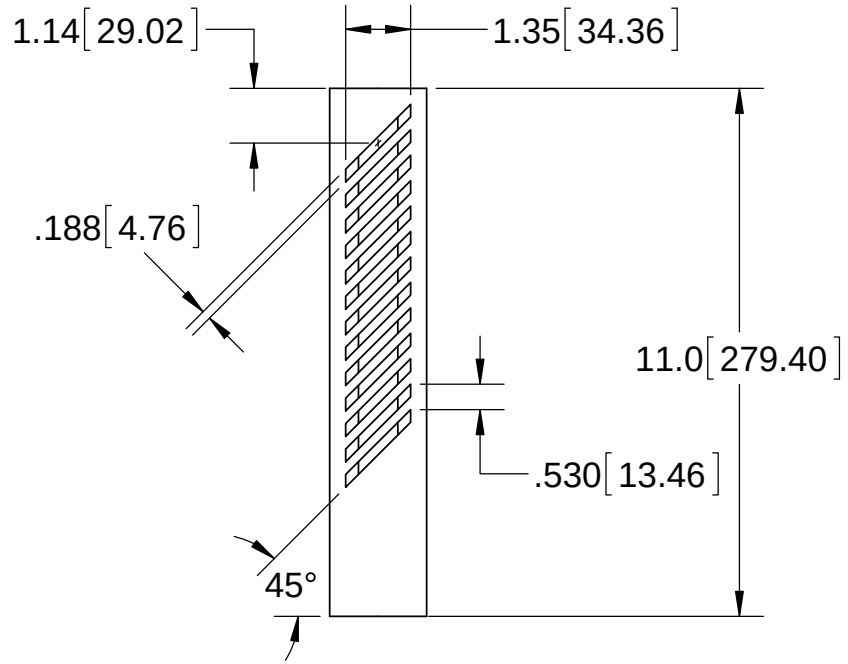

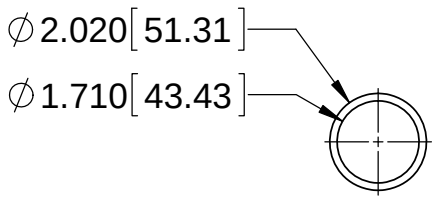

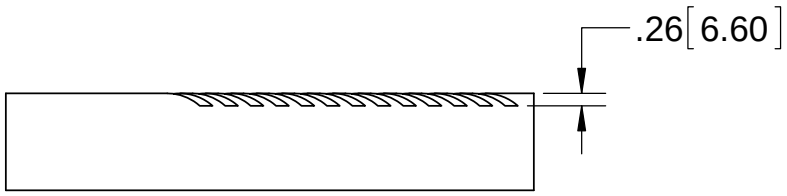

THIRD ANGLE PROJECTION

REMOVE BURRS & SHARP EDGES

UNLESS OTHERWISE SPECIFIED:
DIMENSIONS ARE IN INCHES
TOLERANCES:
FRACTIONAL ±1/32"
ANGULAR: MACH ± 2° BEND: ±1/16"
TWO PLACE DECIMAL ±0.020"
THREE PLACE DECIMAL ±0.005"

OUTSIDE TUBE, VACUUM TUBE

DESCRIPTION

PART NO.	LINEAR BOOK SCANNER	GROUP
ENGINEER	SHAWN WRIGHT	11/5/2013 DATE
DELRIN MATERIAL	WEIGHT	1:4 SCALE	REV.
H:\ME_450\Linear Book Scanner\Vacuum Tube\ FILE PATH		

THIS DRAWING AND ALL PROPRIETARY RIGHTS AND CONCEPTS HEREIN ARE THE EXCLUSIVE PROPERTY OF LBS AND ARE NOT TO BE USED, DUPLICATED OR TREATED IN ANY WAY INCONSISTANT WITH SUCH RIGHTS WITHOUT PERMISSION OF LBS.

5 4 3 2 1

SIZE
A

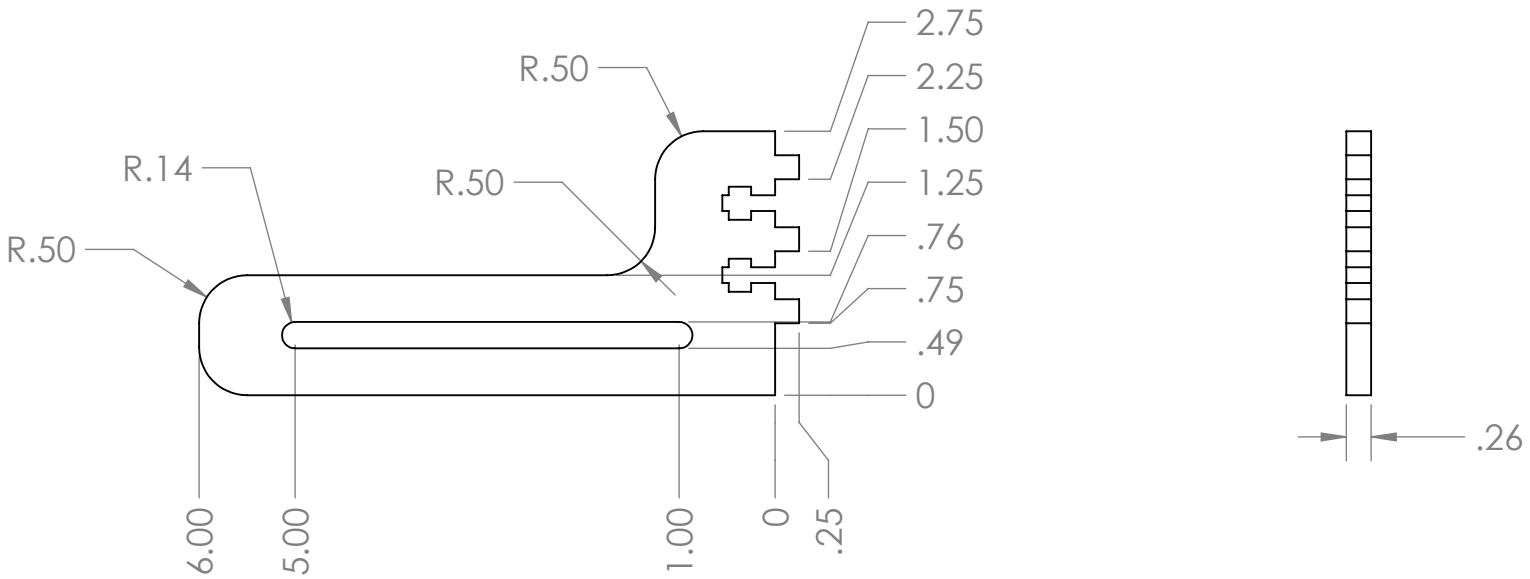

REMOVE BURRS & SHARP EDGES

UNLESS OTHERWISE SPECIFIED:
DIMENSIONS ARE IN INCHES
TOLERANCES:
FRACTIONAL ±1/32"
ANGULAR: MACH ± 2° BEND: ±1/16"
TWO PLACE DECIMAL ±0.020"
THREE PLACE DECIMAL ±0.005"

PADDLE SLIDE, SADDLE

DESCRIPTION

PART NO.		GROUP
ENGINEER	SHAWN WRIGHT	DRAWN BY
		DATE: -
MATERIAL	WEIGHT	SCALE: 1:2
		REV.

FILE PATH: H:\ME_450\Linear Book Scanner\Saddle\

5 4 3 2 1

SHEET 1 OF 1

SIZE
A

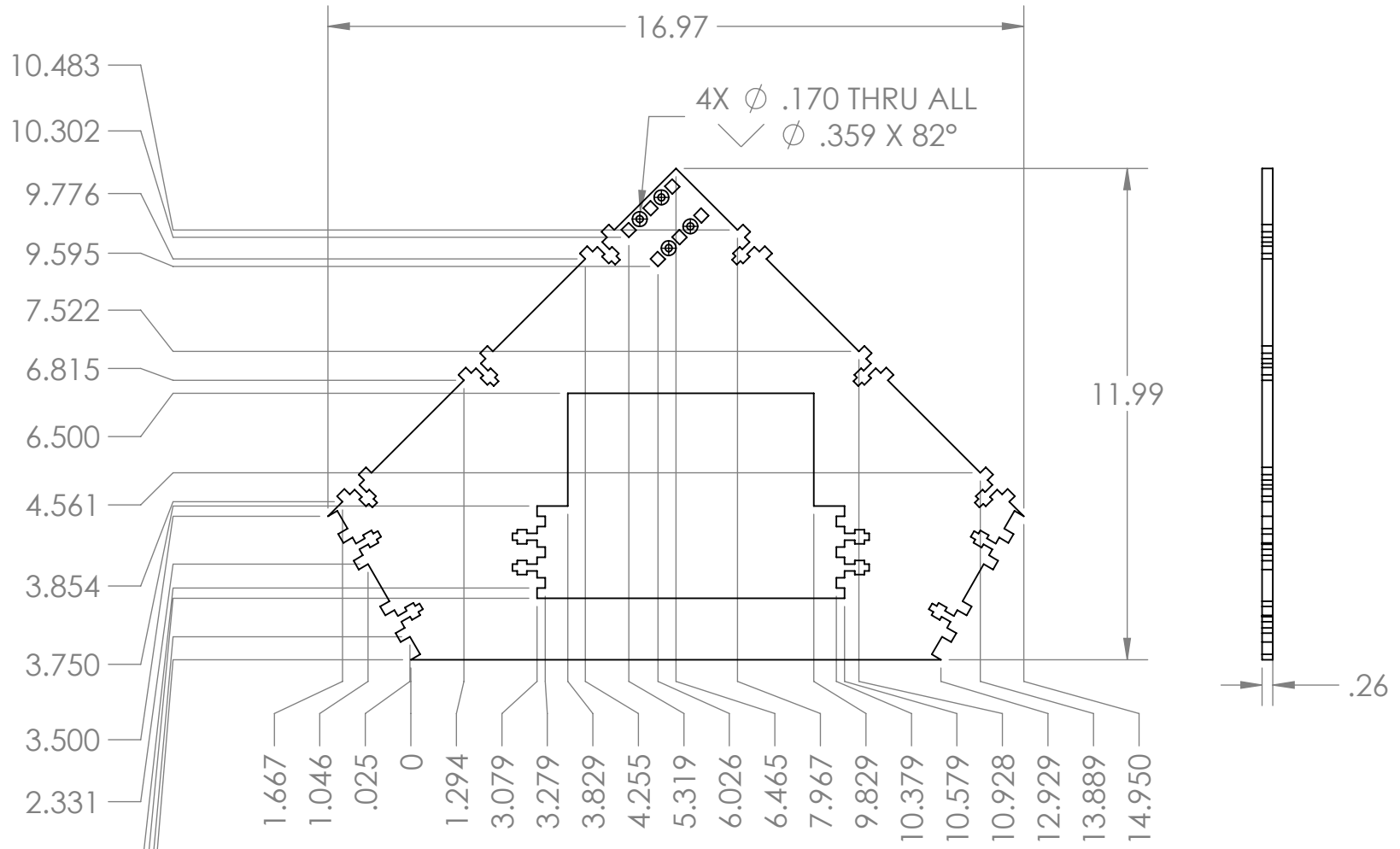

REMOVE BURRS & SHARP EDGES

UNLESS OTHERWISE SPECIFIED:
DIMENSIONS ARE IN INCHES
TOLERANCES:
FRACTIONAL ±1/32"
ANGULAR: MACH ± 2° BEND: ±1/16"
TWO PLACE DECIMAL ±0.020"
THREE PLACE DECIMAL ±0.005"

RIB 1, FRAME

DESCRIPTION

PART NO.		GROUP
ENGINEER	DRAWN BY: SHAWN WRIGHT	DATE: 12/11/2013
MATERIAL: ACRYLIC	WEIGHT	SCALE: 1:4
FILE PATH: H:\ME_450\Linear Book Scanner\Frame\		REV.

5 4 3 2 1

SHEET 1 OF 1

SIZE
A

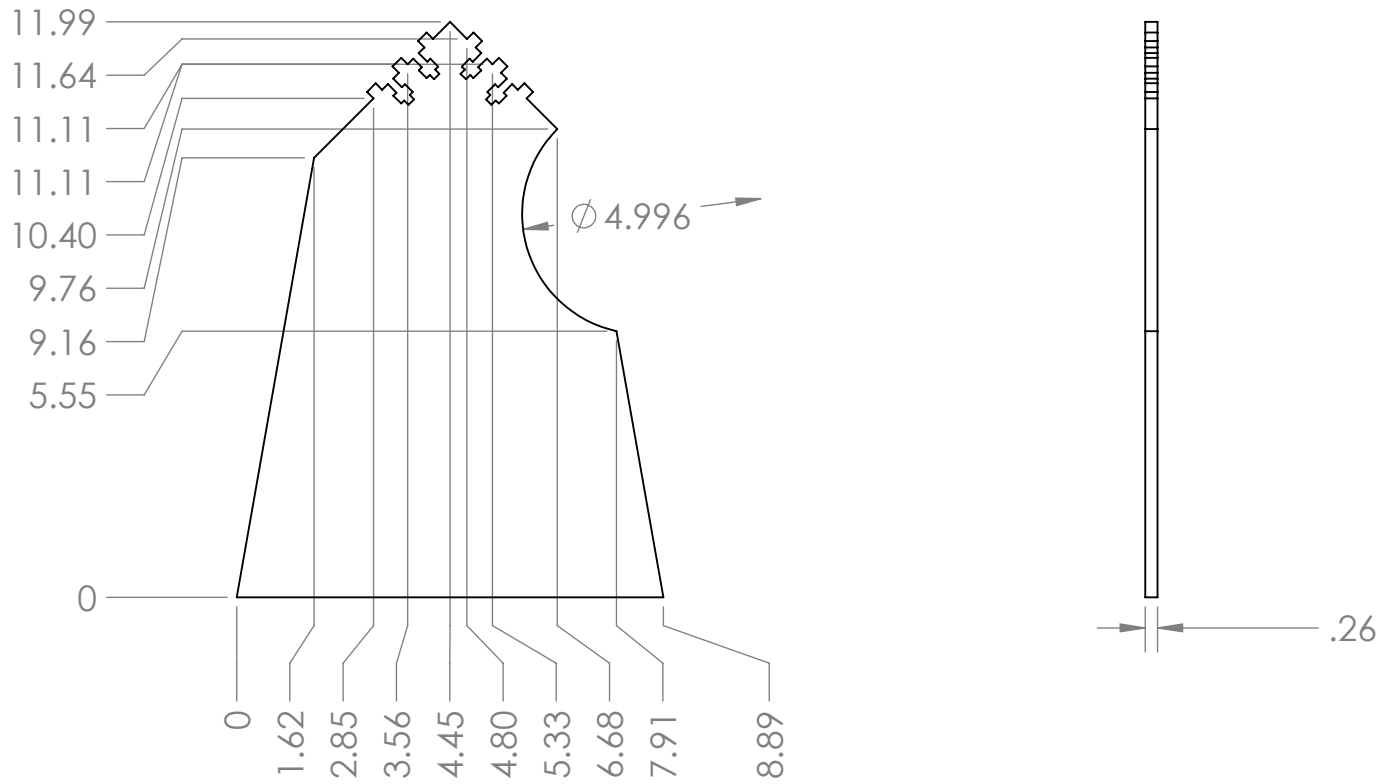

REMOVE BURRS & SHARP EDGES

UNLESS OTHERWISE SPECIFIED:
DIMENSIONS ARE IN INCHES
TOLERANCES:
FRACTIONAL ±1/32"
ANGULAR: MACH ± 2° BEND: ±1/16"
TWO PLACE DECIMAL ±0.020"
THREE PLACE DECIMAL ±0.005"

RIB 3, FRAME

DESCRIPTION

PART NO.		GROUP
ENGINEER	SHAWN WRIGHT	DRAWN BY
		DATE: -
MATERIAL	WEIGHT	SCALE: 1:4
		REV.

FILE PATH: H:\ME_450\Linear Book Scanner\Frame\

5 4 3 2 1

SHEET 1 OF 1

SIZE
A

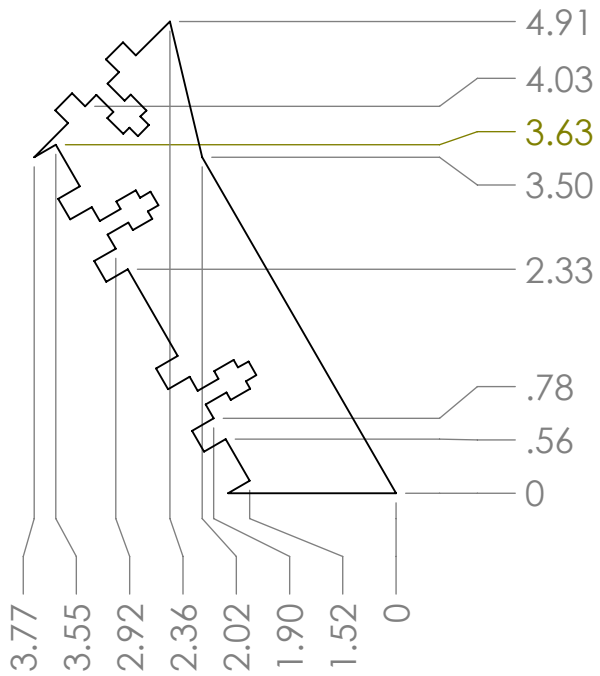

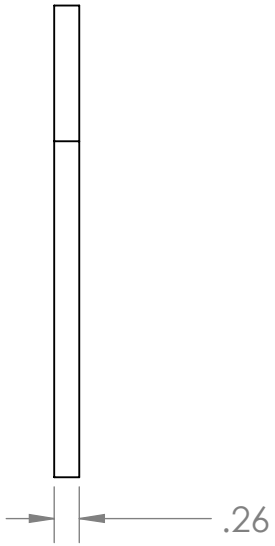

REMOVE BURRS & SHARP EDGES

UNLESS OTHERWISE SPECIFIED:
DIMENSIONS ARE IN INCHES
TOLERANCES:
FRACTIONAL ±1/32"
ANGULAR: MACH ± 2° BEND: ±1/16"
TWO PLACE DECIMAL ±0.020"
THREE PLACE DECIMAL ±0.005"

RIB 4 OUTFEED, FRAME

DESCRIPTION

PART NO. | GROUP

ENGINEER | SHAWN WRIGHT | DRAWN BY | - | DATE

MATERIAL | WEIGHT | 1:2 | SCALE | REV.

H:\ME_450\Linear Book Scanner\Frame\ FILE PATH

5 4 3 2 1

SHEET 1 OF 1

SIZE
A

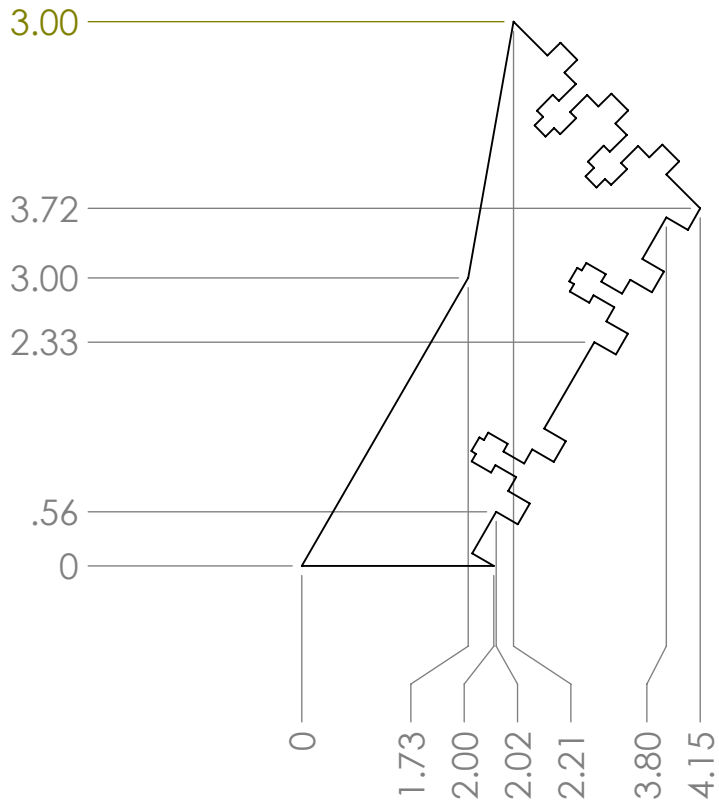

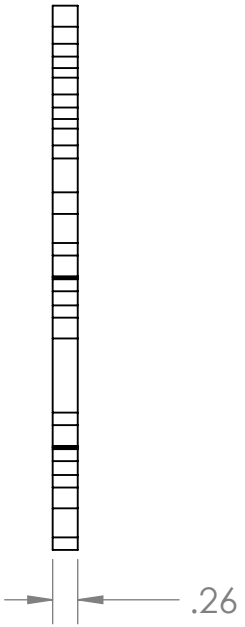

REMOVE BURRS & SHARP EDGES

UNLESS OTHERWISE SPECIFIED:
DIMENSIONS ARE IN INCHES
TOLERANCES:
FRACTIONAL ±1/32"
ANGULAR: MACH ± 2° BEND: ±1/16"
TWO PLACE DECIMAL ±0.020"
THREE PLACE DECIMAL ±0.005"

RIB 4, FRAME

DESCRIPTION

PART NO. | GROUP

ENGINEER | SHAWN WRIGHT | DRAWN BY | - | DATE

MATERIAL | WEIGHT | 1:2 | SCALE | REV.

H:\ME_450\Linear Book Scanner\Frame\ FILE PATH

5 4 3 2 1

SHEET 1 OF 1

SIZE
A

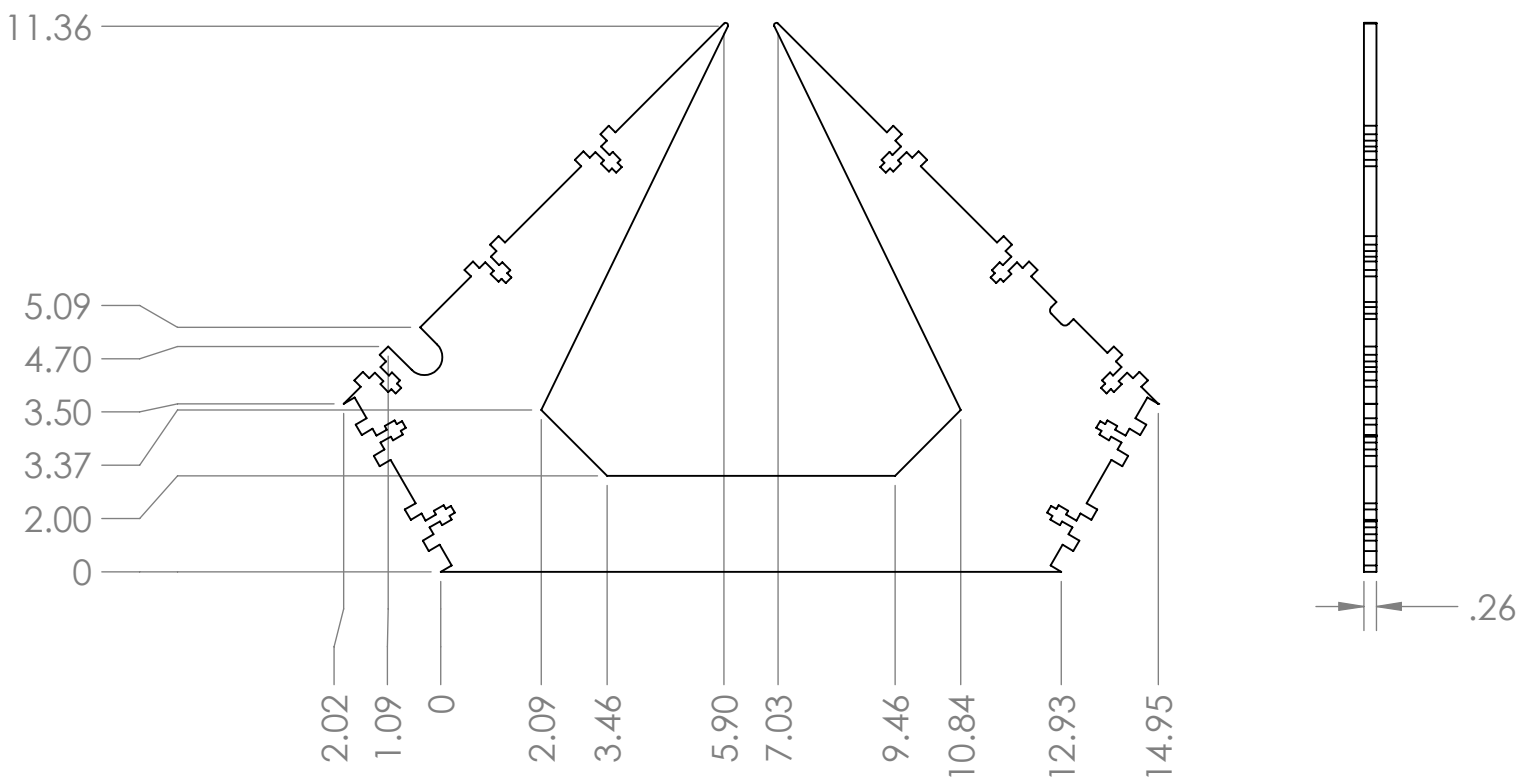

REMOVE BURRS & SHARP EDGES

UNLESS OTHERWISE SPECIFIED:
DIMENSIONS ARE IN INCHES
TOLERANCES:
FRACTIONAL ±1/32"
ANGULAR: MACH ± 2° BEND: ±1/16"
TWO PLACE DECIMAL ±0.020"
THREE PLACE DECIMAL ±0.005"

RIB 5, FRAME

DESCRIPTION

PART NO.		GROUP
ENGINEER	SHAWN WRIGHT	-
	DRAWN BY	DATE
MATERIAL	WEIGHT	1:4 SCALE / REV.

H:\ME_450\Linear Book Scanner\Frame\ FILE PATH

5 4 3 2 1

SHEET 1 OF 1

SIZE
A

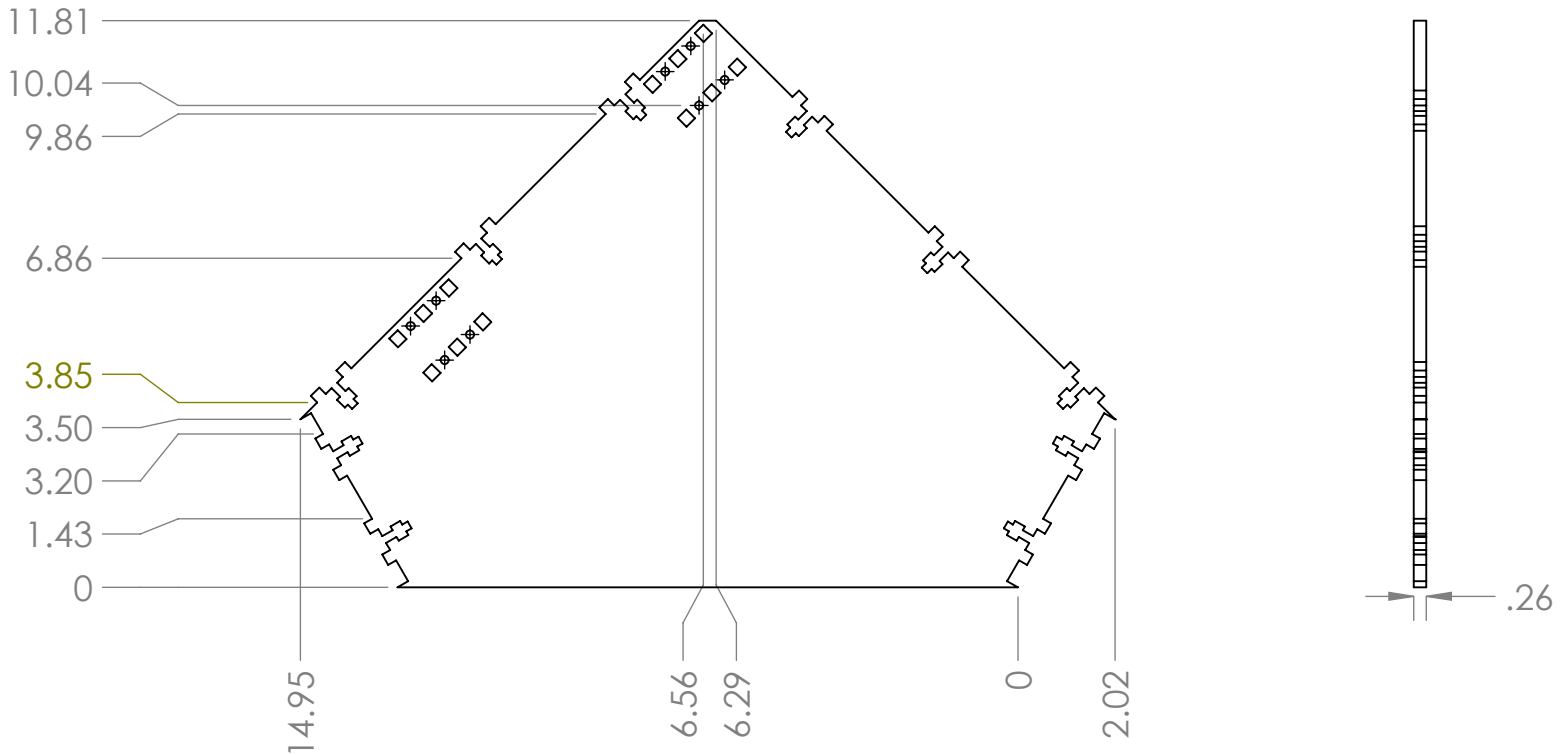

REMOVE BURRS & SHARP EDGES

UNLESS OTHERWISE SPECIFIED:
DIMENSIONS ARE IN INCHES
TOLERANCES:
FRACTIONAL ±1/32"
ANGULAR: MACH ± 2° BEND: ±1/16"
TWO PLACE DECIMAL ±0.020"
THREE PLACE DECIMAL ±0.005"

RIB 6, FRAME

DESCRIPTION

PART NO.		GROUP
ENGINEER	SHAWN WRIGHT	-
	DRAWN BY	DATE
MATERIAL	WEIGHT / SCALE 1:4	REV.

H:\ME_450\Linear Book Scanner\Frame\ FILE PATH

5 4 3 2 1

SHEET 1 OF 1

SIZE
A

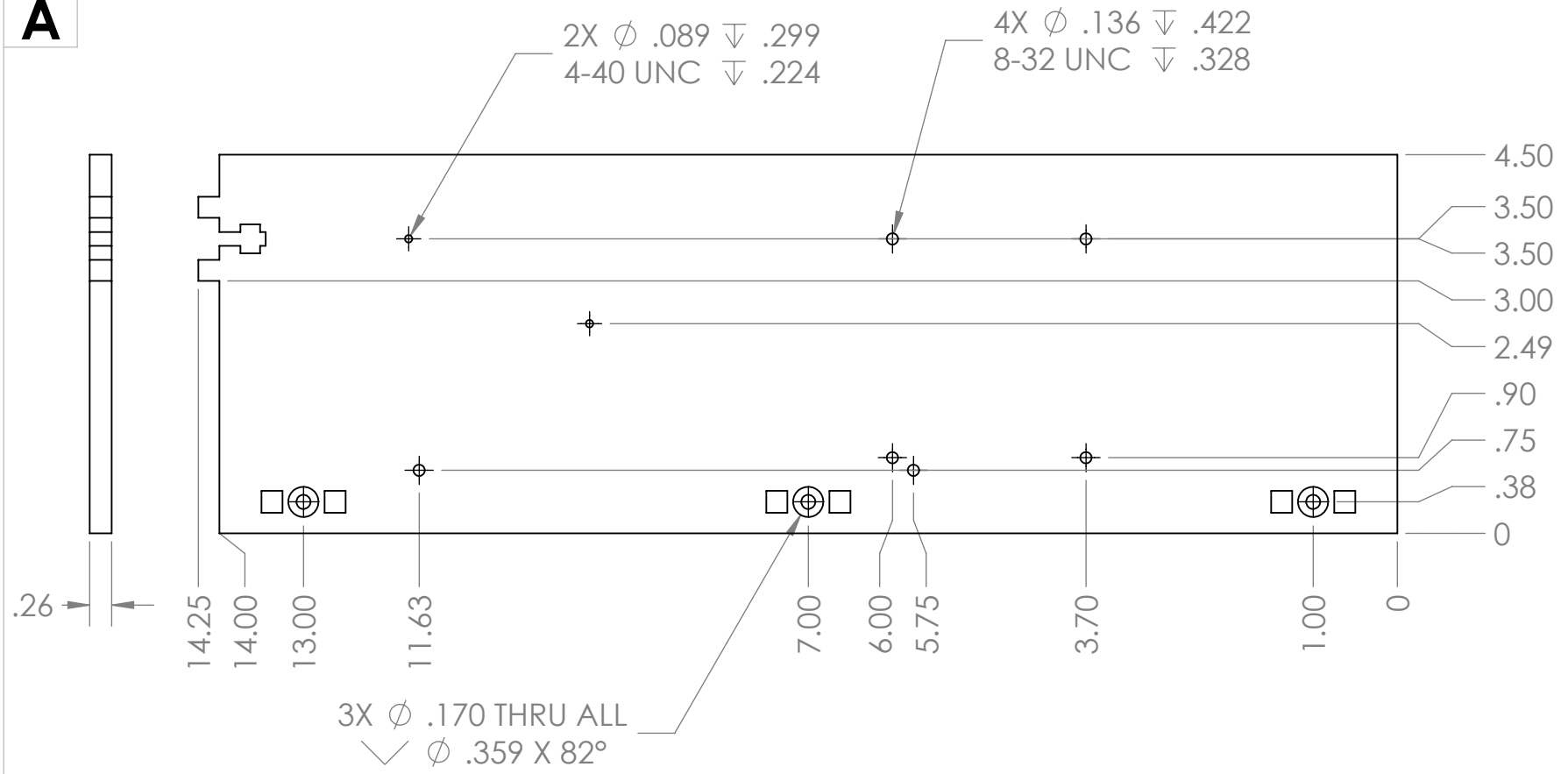

REMOVE BURRS & SHARP EDGES

UNLESS OTHERWISE SPECIFIED:
DIMENSIONS ARE IN INCHES
TOLERANCES:
FRACTIONAL ±1/32"
ANGULAR: MACH ± 2° BEND: ±1/16"
TWO PLACE DECIMAL ±0.020"
THREE PLACE DECIMAL ±0.005"

SIDE INFEED, ELECTRONICS SLIDE

DESCRIPTION

PART NO.			GROUP
ENGINEER	SHAWN WRIGHT	DRAWN BY	- DATE
MATERIAL	WEIGHT	1:8 SCALE	REV.

H:\ME_450\Linear Book Scanner\Electronics Slide\ FILE PATH

5 4 3 2 1

SHEET 1 OF 1

SIZE
A

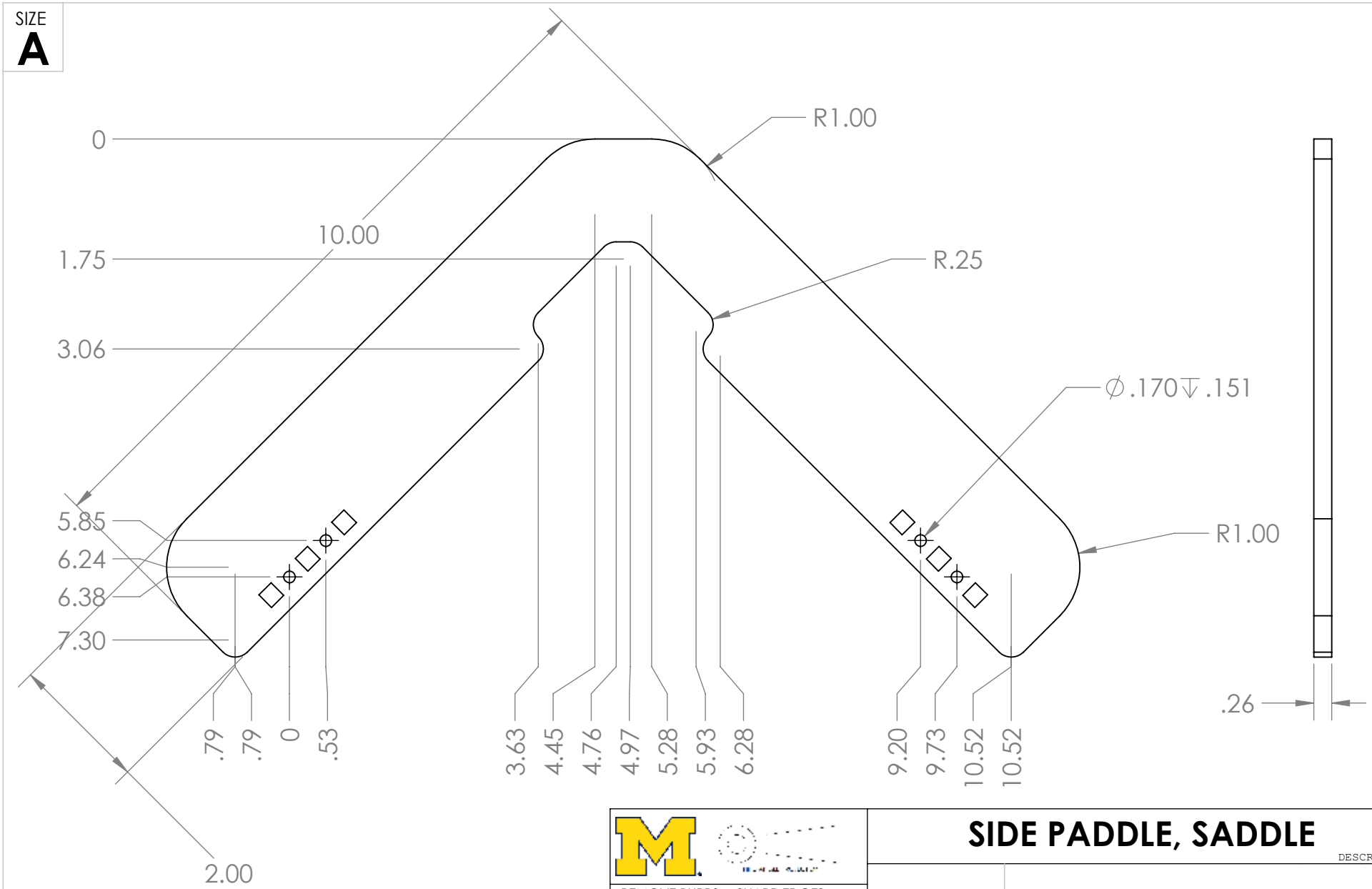

REMOVE BURRS & SHARP EDGES

UNLESS OTHERWISE SPECIFIED:
DIMENSIONS ARE IN INCHES
TOLERANCES:
FRACTIONAL ±1/32"
ANGULAR: MACH ± 2° BEND: ±1/16"
TWO PLACE DECIMAL ±0.020"
THREE PLACE DECIMAL ±0.005"

SIDE PADDLE, SADDLE

DESCRIPTION

PART NO. | GROUP

ENGINEER: SHAWN WRIGHT | DRAWN BY | DATE: -

MATERIAL | WEIGHT | SCALE: 1:4 | REV.

FILE PATH: H:\ME_450\Linear Book Scanner\Saddle\

5 4 3 2 1

SIZE
A

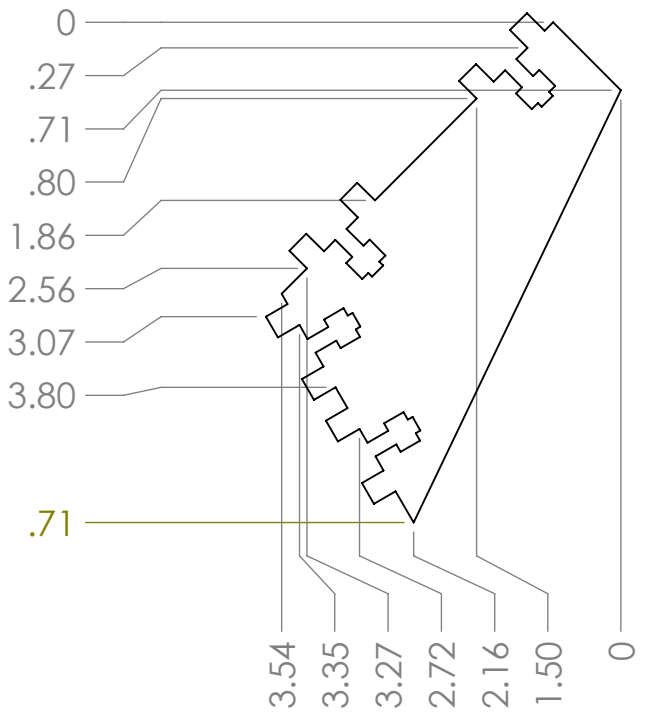

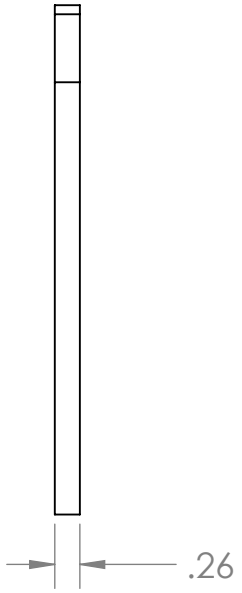

REMOVE BURRS & SHARP EDGES

UNLESS OTHERWISE SPECIFIED:
DIMENSIONS ARE IN INCHES
TOLERANCES:
FRACTIONAL ±1/32"
ANGULAR: MACH ± 2° BEND: ±1/16"
TWO PLACE DECIMAL ±0.020"
THREE PLACE DECIMAL ±0.005"

SIDE, MOTOR MOUNT

DESCRIPTION

PART NO. | GROUP

ENGINEER | SHAWN WRIGHT | DRAWN BY | - | DATE

MATERIAL | WEIGHT | 1:2 | SCALE | REV.

H:\ME_450\Linear Book Scanner\Motor Mount\ FILE PATH

5 4 3 2 1

SHEET 1 OF 1

SIZE
A

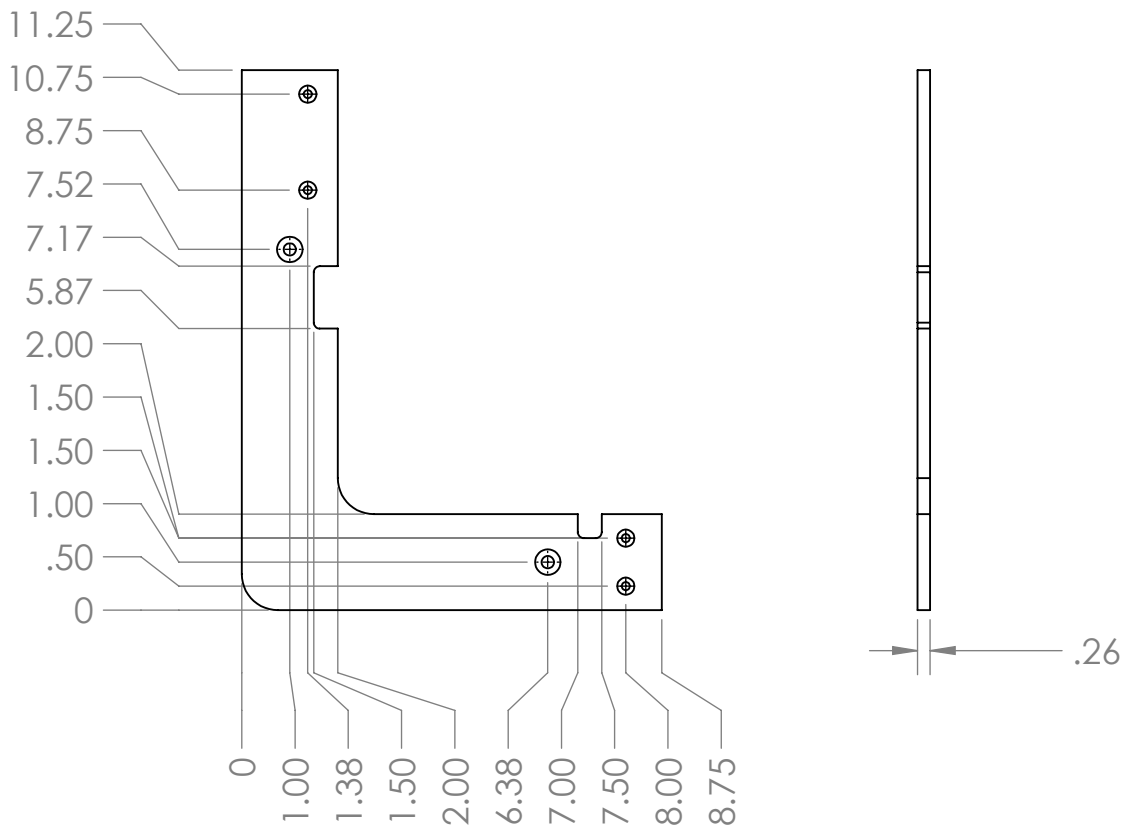

REMOVE BURRS & SHARP EDGES

UNLESS OTHERWISE SPECIFIED:
DIMENSIONS ARE IN INCHES
TOLERANCES:
FRACTIONAL ±1/32"
ANGULAR: MACH ± 2° BEND: ±1/16"
TWO PLACE DECIMAL ±0.020"
THREE PLACE DECIMAL ±0.005"

SIDE_2, SADDLE

DESCRIPTION

PART NO. | GROUP

ENGINEER | DRAWN BY SHAWN WRIGHT | DATE

MATERIAL | WEIGHT | SCALE 1:8 | REV.

H:\ME_450\Linear Book Scanner\Saddle\ FILE PATH

5 4 3 2 1

SHEET 1 OF 1

SIZE
A

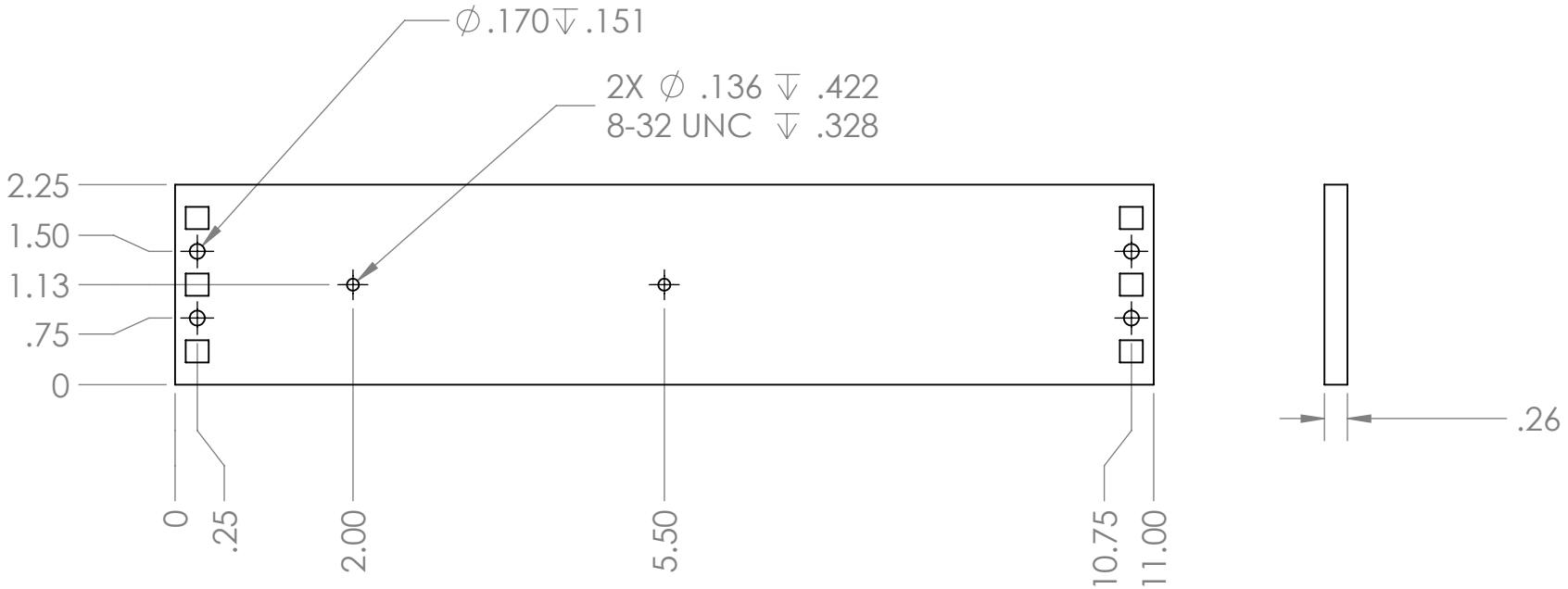

SLIDE MOUNT INFEED, ELECTRONICS SLIDE

DESCRIPTION

REMOVE BURRS & SHARP EDGES

UNLESS OTHERWISE SPECIFIED:
DIMENSIONS ARE IN INCHES
TOLERANCES:
FRACTIONAL ±1/32"
ANGULAR: MACH ± 2° BEND: ±1/16"
TWO PLACE DECIMAL ±0.020"
THREE PLACE DECIMAL ±0.005"

PART NO.			GROUP
ENGINEER	SHAWN WRIGHT	DRAWN BY	- DATE
MATERIAL	WEIGHT	1:4 SCALE	REV.

H:\ME_450\Linear Book Scanner\Electronics Slide\ FILE PATH

5 4 3 2 1

SHEET 1 OF 1