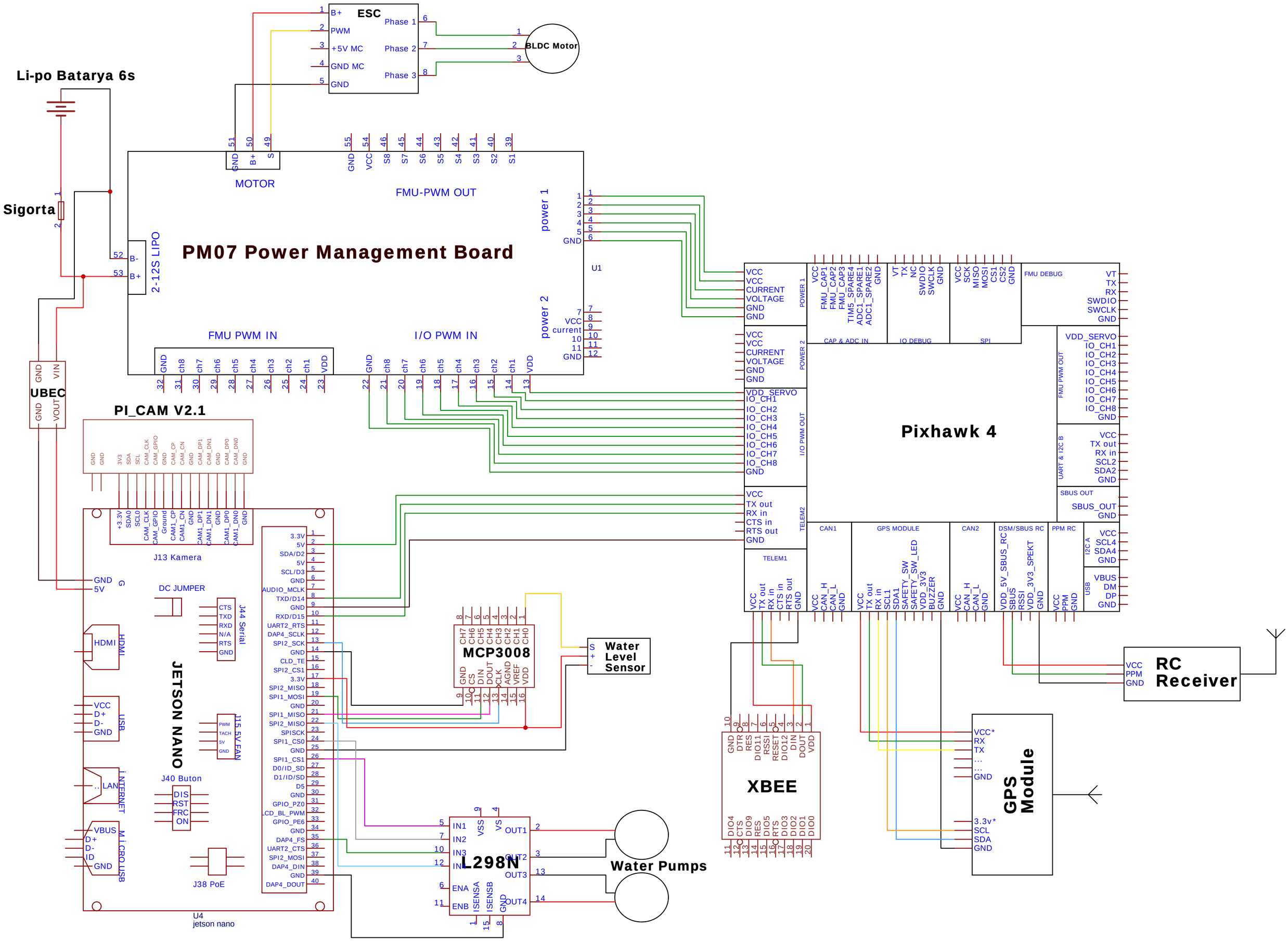

TITLE: Sheet_2	REV: 1.0
Company: Your Company	Sheet: 1/1
Date: 2020-08-01 Drawn By:	

EasyEDA