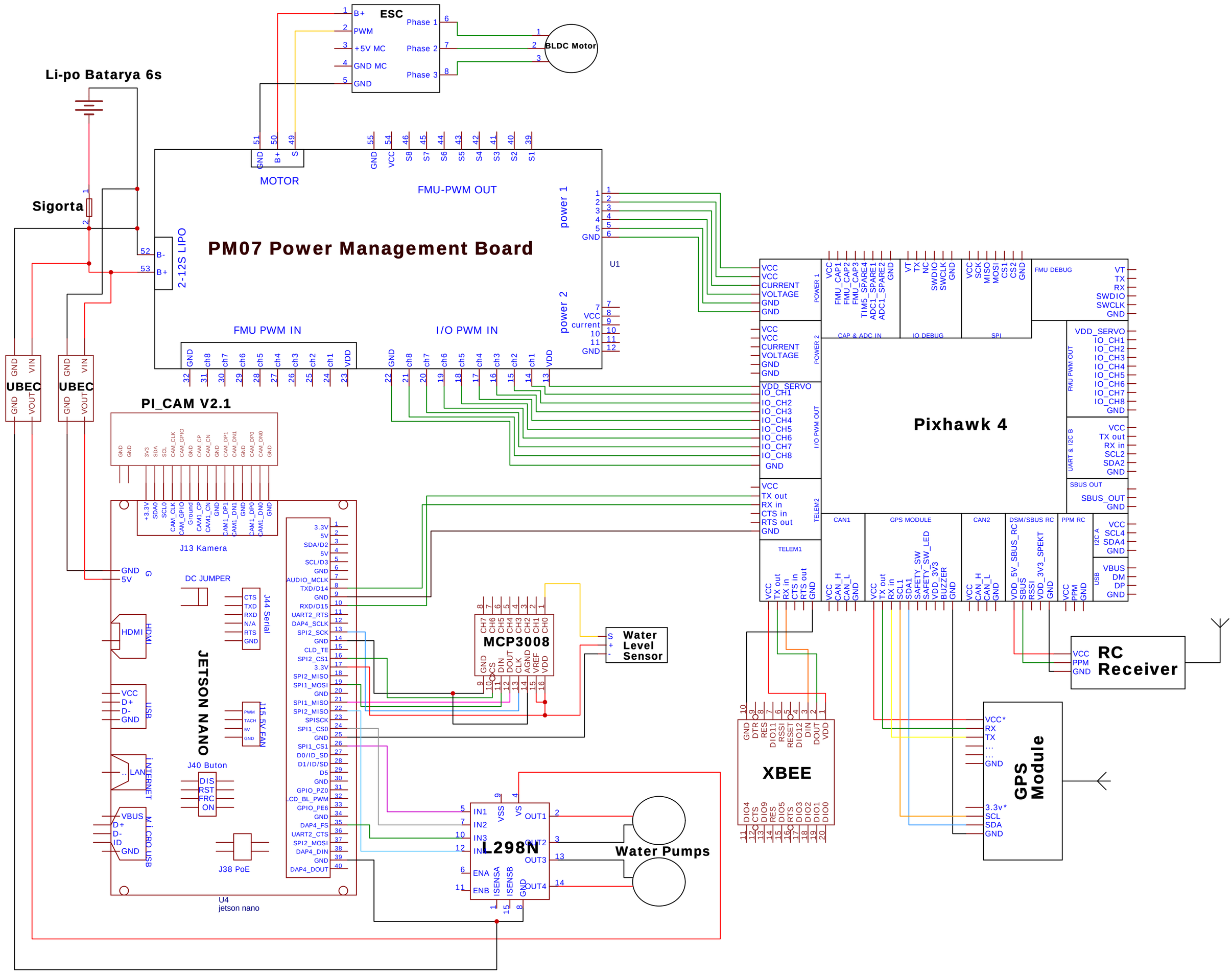

TITLE: Devre Şemas ı	REV: 1.0
EasyEDA	Company: KUSBEGI
	Sheet: 1/1
	Date: 2020-08-01 Drawn By: