Mask2Derm: Photorealistic and Controllable Skin Lesion Synthesis via Latent Diffusion

Can Rollas[*1,2], **Mehmet Kemal Güllü**[1,3], **and İbrahim Onur Alıcı**[1,4]

[1]R&D Department, Amatis IT, `www.amatis.nl`
[2]Department of Computer Engineering, Faculty of Engineering, Izmir Institute of Technology (IZTECH)
[3]Department of Electrical and Electronics Engineering, Faculty of Engineering and Architecture, İzmir Bakırçay University
[4]Department of Biomedical Engineering, Faculty of Engineering and Architecture, İzmir Bakırçay University

Code & Training & Inference Scripts Mask2Derm Generated Skin Lesions

Abstract. Despite rapid advances in computer vision and generative AI, data sharing and the lack of standardized datasets remain major bottlenecks in medical imaging. Skin lesion datasets suffer from limited labeled segmentation data. We leverage HAM10000, a large public dermoscopy dataset, as our primary data source, to generate skin lesion images from binary masks. On this dataset, we train a ControlNet-based latent diffusion model that synthesizes photorealistic dermoscopic images conditioned on binary lesion segmentation masks. To enable fully automated generation, we additionally train a lightweight diffusion model that generates plausible lesion masks from scratch, forming an end-to-end pipeline capable of producing paired mask-image samples without any manual input. [Quantitative results to be added.]

Keywords. Dermoscopy, ControlNet, Diffusion Models, Data Augmentation, Skin Lesion Synthesis

1 Introduction

Problem definition: Skin cancer is one of the most prevalent malignancies worldwide, with incidence and mortality rates rising steadily over recent decades [1]. Early and accurate diagnosis via dermoscopy is critical, yet the performance of data-driven diagnostic models is fundamentally bounded by ***data scarcity in segmentation*** and ***the high cost of pixel-level annotation***. Public dermoscopy collections such as HAM10000 [2], while providing a valuable starting point, offer limited pixel-level segmentation annotations and insufficient morphological diversity to train robust segmentation models. Rather than treating such collections as the final training source, we use them as a foundation to learn the visual statistics of dermoscopic images from which we can generate a far larger and more diverse annotated corpus.

The problem defines data scarcity in dermoscopic segmentation as a bottleneck for developing accurate and generalizable models. The high cost of pixel-level annotation, which requires expert dermatologists, further exacerbates this issue.

*Corresponding author: `canrollas@iyte.edu.tr`

Motivation: Synthetic data generation offers a principled path around the scarcity of annotated dermoscopic images: labeled samples can be produced at scale without patient privacy concerns or the bottleneck of clinical annotation labour [26]. This motivation is grounded directly in our own research experience. While developing an in-house dermoscopic lesion segmentation model based on a lightweight U-Net architecture, we repeatedly encountered a hard ceiling: regardless of the architectural modifications we applied, model performance stagnated due to the limited number of available annotated samples. Recruiting expert dermatologists for additional pixel-level mask annotation was not a feasible option at our scale. Faced with this bottleneck, we concluded that the most practical path to breaking through the segmentation performance barrier was not to redesign the model, but to expand the training data itself — specifically by generating new paired image–mask samples synthetically.

This observation led us to reframe the problem: rather than acquiring more labeled images, we ask whether a generative model can produce realistic dermoscopic images that *conform to a given segmentation mask*. Such a model would invert the traditional annotation pipeline — instead of experts labeling images, the model produces images already aligned to their masks — yielding an effectively unlimited supply of paired training data.

However, generating *clinically plausible* dermoscopy images is non-trivial. Synthesized images must (i) respect precise lesion geometry shape, borders, and asymmetry that encodes diagnostic features; (ii) reproduce realistic dermoscopic textures such as pigment networks, streaks, and regression structures; and (iii) conform to the optical characteristics of real dermoscopes [2]. Earlier GAN-based approaches struggle with geometric controllability and mode collapse [4], while recent diffusion models offer superior sample diversity but typically lack fine-grained spatial control [5, 25]. Combining latent diffusion with ControlNet [7] provides a promising bridge: mask-level spatial conditioning guides lesion geometry while the pre-trained backbone supplies rich texture priors.

Contributions. This paper presents *Mask2Derm*, a mask-conditioned latent diffusion framework for photorealistic and controllable dermoscopic image synthesis. Our main contributions are:

- **Public minimal synthetic dataset.** We release a publicly available collection of synthetically generated dermoscopic images paired with binary segmentation masks, intended as a minimal ready-to-use resource for training and benchmarking segmentation models. The dataset is accessible at Kaggle: Mask2Derm Generated Skin Lesions.
- **Mask-conditioned ControlNet pipeline.** We fine-tune a ControlNet module on top of a frozen Stable Diffusion backbone, enabling precise geometry control from binary segmentation masks while preserving the generative diversity of the pre-trained prior.
- **Clinical utility validation.** [Will be added soon]

2 Literature Review

Skin lesion segmentation is a fundamental preprocessing step in computer-aided diagnosis (CAD) systems for dermatological conditions. Clinically, dermatologists rely on the ABCDE criteria (asymmetry, border irregularity, color variation, diameter, and evolution) to assess malignancy risk [8] (Figure 1). Each of these criteria is inherently spatial: asymmetry requires comparing lesion halves, border irregularity depends on precise boundary delineation, and color variation analysis is meaningful only within a correctly isolated lesion region. Consequently, the accuracy of the segmentation mask directly conditions the reliability of downstream diagnostic features.

This tight coupling between *segmentation quality and diagnostic outcome* has driven sustained effort toward building more accurate and robust lesion segmentation models, with deep learning architectures at the center of this progress.

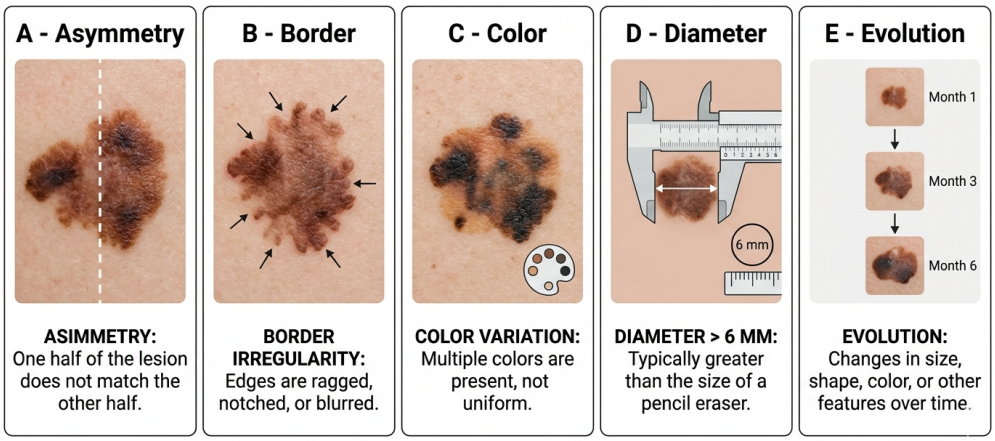

Figure 1. The ABCDE criteria used in clinical dermoscopy evaluation: Asymmetry, Border irregularity, Color variation, Diameter, and Evolution [8].

Early deep learning approaches to lesion segmentation were dominated by fully convolutional encoder-decoder architectures. The seminal U-Net [9], originally proposed for biomedical image segmentation, became the de facto backbone for skin lesion tasks due to its skip connections that preserve spatial detail across encoding and decoding stages. Building on this foundation, the ISIC challenges [10, 11] provided the first large-scale benchmarks for skin lesion segmentation, establishing U-Net and its variants as the dominant approach and catalysing a wave of architecture-level improvements.

Attention mechanisms were incorporated to allow the decoder to focus selectively on lesion boundaries rather than treating all spatial locations equally [12]. Dilated convolutions and atrous spatial pyramid pooling, popularised by DeepLabV3+ [13], improved multi-scale context aggregation and were quickly adapted to dermoscopy segmentation to handle lesions that vary greatly in size and aspect ratio. The introduction of *transformer-based architectures* marked a further shift: TransUNet [14] combined a Vision Transformer encoder with a convolutional decoder, capturing long-range spatial dependencies that convolutions struggle to model, while Swin-UNet [15] demonstrated that a *pure transformer hierarchy* could match or exceed CNN-based segmentation performance on medical benchmarks.

Despite these architectural advances, a *persistent bottleneck remains*: all of the above models are supervised and rely on pixel-level annotated masks for training. Data scarcity is a well-documented challenge in deep learning broadly [16], and dermoscopy is particularly affected: the limited scale of annotated datasets such as ISIC has been shown to hinder the development of highly generalisable segmentation models [17]. Public dermoscopy collections provide only on the order of ten thousand annotated images, and expert annotation is costly and slow to scale. Consequently, models trained on existing datasets frequently *fail to generalise* to unseen lesion morphologies or acquisition conditions a ceiling imposed not by architecture but by data scarcity. This observation motivates the exploration of synthetic data generation as a complementary strategy to architectural refinement.

Synthetic image generation has therefore emerged as a principled response to this bottleneck, offering a scalable path toward more generalizable segmentation models without the cost and

delay of expert annotation.Early approaches to synthetic dermoscopy image generation relied on Generative Adversarial Networks (GANs) [18]. In the general medical imaging domain, architectures such as DCGAN and StyleGAN2 were applied to augment under-represented pathology classes, with StyleGAN2 achieving near-indistinguishable synthetic outputs on radiology datasets as measured by Fréchet Inception Distance (FID) [19]. For skin lesion data specifically, conditional GAN variants were adapted to address the severe class imbalance in dermoscopic collections, where malignant samples constitute a small minority of available images [17].

However, noise-based GAN architectures generate images without explicit spatial constraints, producing lesions whose morphological markers lack anatomical coherence. This limitation is critical for segmentation: training a segmentation model requires pixel-perfect ground-truth masks that are spatially aligned with the synthesised image. Bissoto et al. [20] addressed this by adopting pix2pixHD [21], a high-resolution image-to-image translation network conditioned on semantic segmentation masks. By incorporating superpixel-based instance maps alongside binary lesion masks, their framework produced 1024×512 synthetic dermoscopy images whose structural boundaries remained faithful to the input mask, achieving an AUC of 82.0% on a downstream classification task. A subsequent critical review by the same group confirmed that mask-conditioned translation models such as pix2pixHD and Spatially Adaptive Normalisation (SPADE) consistently outperform noise-based generators in anatomical coherence [22].

Despite these advances, GAN-based mask-conditioned synthesis suffers from training instability, mode collapse, and limited diversity in generated textures. Diffusion models have recently emerged as a more stable and expressive alternative: by learning to reverse a gradual noising process, they produce sharper and more diverse outputs than GANs while remaining amenable to spatial conditioning signals [23] (Figure 2). This property makes them particularly suited to the two-stage pipeline explored in the present work, in which a diffusion model first synthesises a plausible lesion mask and subsequently generates a photorealistic dermoscopy image conditioned on that mask — decoupling shape generation from texture synthesis and enabling fine-grained control over both.

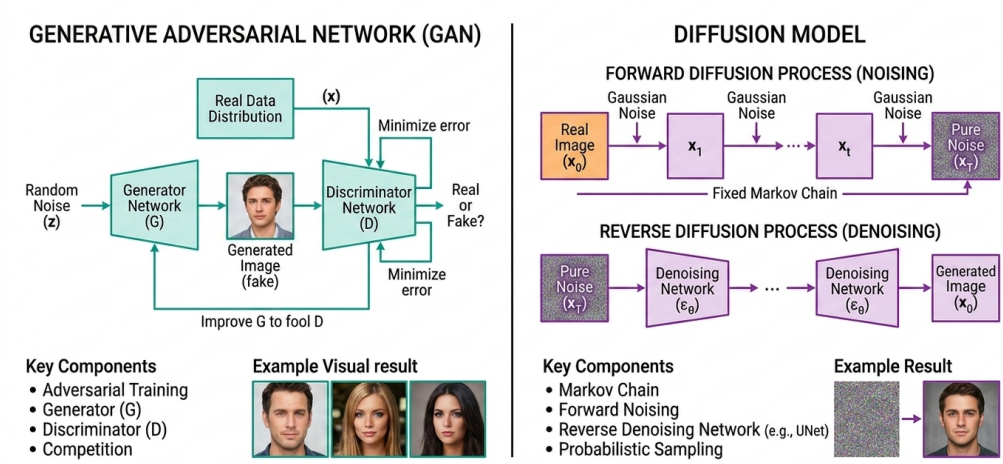

Figure 2. The main architecture difference of the GAN and Diffusion based generation

This stability advantage has been validated in the dermoscopy domain. Yang et al. [24] demonstrated that a DDPM augmented with dilated convolutions and self-attention mechanisms could reduce the annotated data requirement substantially: lightweight segmentation models trained on real and synthetic combined data matched the performance of models with ten

times more parameters trained on real data alone. At the architecture level, SkinDualGen [25] extended Stable Diffusion with LoRA fine-tuning to simultaneously synthesise a dermoscopic image and its corresponding binary segmentation mask from a single text prompt, achieving a Dice score of 80.12 and an IoU of 66.84 on ISIC 2018 — removing the need for separate mask annotation entirely. ControlNet-based adaptations of mask-conditioned diffusion further demonstrated that providing an explicit lesion boundary as a spatial conditioning signal enables precise control over lesion shape and location in the generated image [26].

Taken together, this body of evidence positions mask-guided diffusion as the most promising generative strategy for dermoscopy segmentation: it combines the anatomical controllability of mask-conditioned GANs with the training stability and output diversity of diffusion models. The present work builds directly on this foundation.

3 Methodology

In this section, we present the proposed pipeline for photorealistic and controllable skin lesion synthesis. The overall workflow, illustrated in Figure 3, follows a sequential generation process: (1) specification of the lesion geometry via a binary segmentation mask, (2) optional physics-based optical standardization of training images, (3) conditioning of the latent diffusion model through ControlNet, and (4) classifier-free guidance at inference to balance mask adherence and image diversity.

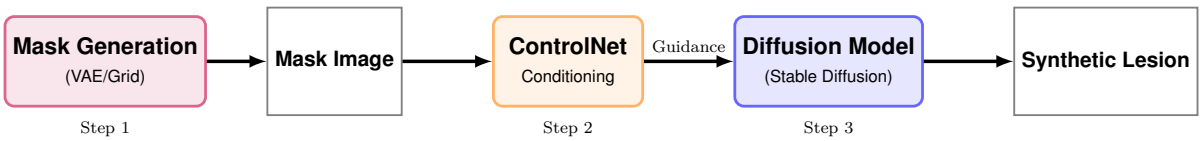

Figure 3. Overview of the Mask2Derm pipeline: proceeding from mask generation to ControlNet conditioning and final lesion synthesis.

3.1 Dataset & Preprocessing

Dataset. We consolidate two public dermoscopy benchmarks: ISIC-2018 Task 1 [11] and HAM10000 [2]. After deduplication and resolution normalization to 512×512 pixels, the combined corpus contains approximately 11 000 image–mask pairs. Lesion labels are unified into a binary benign/malignant taxonomy; HAM10000 diagnoses `{mel, bcc, scc, akiec}` are marked malignant and the remainder benign. The dataset is split 80/10/10 for training, validation, and held-out testing.

Optics-inspired standardization. Raw images sourced from heterogeneous devices differ in field-of-view shape, brightness roll-off, and lens geometry. To harmonize these differences, we implement a physics-based simulation of dermoscope optics consisting of three stages applied in sequence.

First, we define the radial distance $d(x, y) = \sqrt{(x - c_x)^2 + (y - c_y)^2}$ from the image centre (c_x, c_y). This distance map drives both the circular aperture mask $M(d)$ and the vignetting

falloff $V(d)$:

$$M(d) = \begin{cases} 1, & d \le R \\ \text{smooth feather}, & R < d \le R + \delta \\ 0, & d > R + \delta \end{cases} \quad \text{and} \quad V(d) = (1-\alpha) + \alpha \left(1 - (d/R)^2\right)^{\gamma} \tag{1}$$

where R is the aperture radius, δ is the feathering margin, α controls vignetting strength, and γ governs the falloff rate.

Second, we simulate barrel distortion by remapping pixel coordinates via a radial displacement model:

$$\begin{aligned} X &= \frac{x - c_x}{f_x}, \quad Y = \frac{y - c_y}{f_y}, \quad r^2 = X^2 + Y^2 \\ x_d &= f_x X(1 + k_1 r^2) + c_x, \quad y_d = f_y Y(1 + k_1 r^2) + c_y \end{aligned} \tag{2}$$

where $k_1 < 0$ induces the barrel effect. The final standardized image combines all three components: $I'(x, y) = I(x_d, y_d) \cdot M(d) \cdot V(d)$.

[Figure: `figures/lens_simulation_comparison.png`]

Figure 4. Visual comparison before (left) and after (right) applying physics-based circular lens simulation.

Each processed image–mask pair is then used as a training sample, ensuring the model learns to generate synthetic images with consistent optical characteristics.

3.2 Mask Generation Pipeline

When real segmentation masks are not available, novel binary lesion masks can be generated via a dedicated Denoising Diffusion Probabilistic Model (DDPM) trained on the binary mask collection. This lightweight UNet (22M parameters) is trained solely on binary masks and generates realistic lesion shapes from Gaussian noise using a standard forward/reverse diffusion process with $T = 500$ timesteps.

At inference, the mask generator produces N novel binary masks of resolution 512×512. These synthetic masks are then passed directly to the ControlNet synthesis pipeline (Section 3.3), enabling a fully annotation-free generation workflow. The mask generator and the image synthesis model are decoupled: one can use real masks, synthetically generated masks, or hand-drawn masks interchangeably as conditions for image generation.

3.3 ControlNet-based Diffusion Model

Our image synthesis pipeline is built upon the latent diffusion model (LDM) framework [27], utilizing the pre-trained Realistic Vision V5.1 as its frozen backbone. As illustrated in Figure 5, the foundational model consists of three core frozen components: (i) a Variational Autoencoder

(VAE) that encodes images into a lower-dimensional latent space, (ii) a U-Net based denoiser operating in this latent space, and (iii) a CLIP text encoder providing textual conditioning.

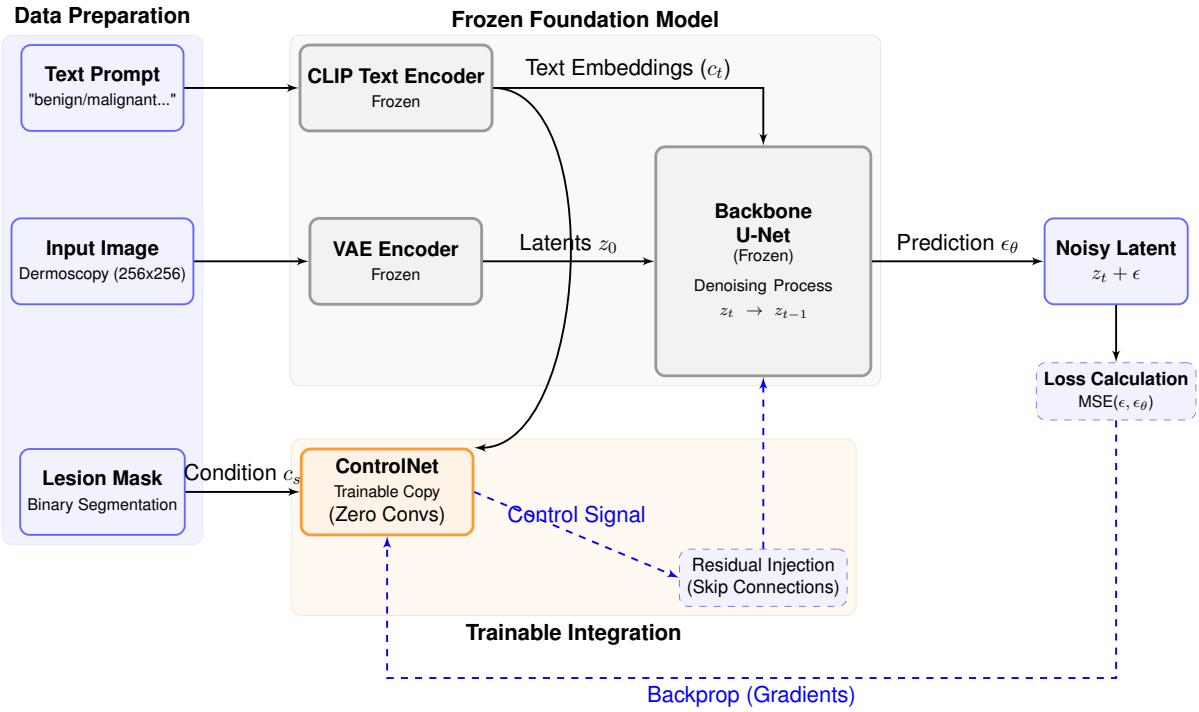

Figure 5. General architecture of the proposed Mask-Conditioned ControlNet pipeline.

The VAE architecture, depicted in Figure 6, compresses high-resolution images into a compact latent space, allowing the diffusion process to operate on significantly smaller tensors without losing semantic detail.

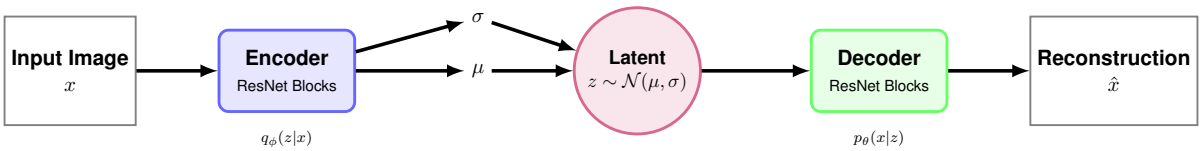

Figure 6. VAE Architecture: the input image is encoded into a latent distribution z; the diffusion process operates within this compressed space.

To enable precise geometric control from binary masks, we integrate a ControlNet module. ControlNet creates a trainable copy of the U-Net encoder blocks and middle block. It employs *zero convolution* layers—1×1 convolutions initialized with both weights and biases at zero—to prevent disruption of the pre-trained prior at the start of training. Let $\mathcal{F}(x; \Theta)$ represent a U-Net block with frozen parameters Θ and Θ_c its trainable copy. The conditioning output is:

$$y_c = \mathcal{F}(x; \Theta) + \mathcal{Z}(\mathcal{F}(x + \mathcal{Z}(c; \Theta_{z1}); \Theta_c); \Theta_{z2}) \tag{3}$$

where c is the binary segmentation mask condition and $\mathcal{Z}(\cdot; \Theta_{z_i})$ denotes the zero convolution layers. At initialization, $y_c = \mathcal{F}(x; \Theta)$, so the model starts from the original backbone behaviour and learns conditioning progressively.

The training objective minimizes the mean squared error between the noise predicted by the

model and the actual noise added to the latent:

$$\mathcal{L} = \mathbb{E}_{\mathbf{x}_0, \boldsymbol{\epsilon} \sim \mathcal{N}(0,\mathbf{I}), t, c_t, c_s} \left[\| \boldsymbol{\epsilon} - \boldsymbol{\epsilon}_\theta(\mathbf{z}_t, t, c_t, c_s) \|_2^2 \right] \tag{4}$$

where $\mathbf{x}_0$ is the ground truth image, $\mathbf{z}_t$ is the noisy latent at timestep t, $\boldsymbol{\epsilon}$ is the ground truth noise, c_t is the text prompt, and c_s is the mask condition. Only ControlNet parameters are updated; all backbone weights remain frozen throughout training.

3.4 Classifier-Free Guidance

At inference, we employ Classifier-Free Guidance (CFG) [**?**] to control the adherence of the generated image to both the text prompt and the mask condition. CFG jointly trains the model with and without conditioning signals by randomly dropping them during training with a fixed probability p_{drop}. At inference, the noise estimate is extrapolated away from the unconditional prediction:

$$\tilde{\boldsymbol{\epsilon}}_\theta = \boldsymbol{\epsilon}_\theta(\mathbf{z}_t, \varnothing, \varnothing) + w \cdot (\boldsymbol{\epsilon}_\theta(\mathbf{z}_t, c_t, c_s) - \boldsymbol{\epsilon}_\theta(\mathbf{z}_t, \varnothing, \varnothing)) \tag{5}$$

where $w \geq 1$ is the guidance scale and $\varnothing$ denotes the null conditioning. A higher w increases fidelity to the mask and prompt at the cost of sample diversity. In our experiments we use $w = 7.5$ as the default, which provides a good balance between lesion shape adherence and texture variety. The guidance scale can be adjusted at inference time without retraining, enabling users to trade diversity for control depending on the downstream application.

4 Experiments

Our experimental design is structured to assess three critical dimensions of synthetic medical data: (1) **Perceptual Realism**, evaluating visual indistinguishability from real dermoscopy; (2) **Distributional Fidelity**, quantifying statistical alignment between synthetic and real distributions; and (3) **Clinical Utility**, measuring the practical value of synthetic data for training downstream segmentation models.

4.1 Implementation Details

Training was conducted on a single NVIDIA A100 GPU. The full hyperparameter configuration is as follows:

- **Base Model:** Realistic Vision V5.1 (`SG161222/Realistic_Vision_V5.1_noVAE`)
- **ControlNet Initialization:** `lllyasviel/sd-controlnet-seg`
- **Resolution:** 256×256 pixels
- **Batch Size:** 16 (gradient accumulation steps = 4; effective batch = 64)
- **Learning Rate:** 1×10^{-5} (cosine schedule, 500 warmup steps)
- **Optimizer:** AdamW ($\beta_1 = 0.9$, $\beta_2 = 0.999$, weight decay = 10^{-2})
- **Epochs:** 100
- **Mixed Precision:** FP32
- **Guidance Scale (w):** 7.5
- **Inference Scheduler:** DDPM, 200 denoising steps

All checkpoints were saved every epoch to monitor convergence. Figure 7 shows training loss over 100 epochs.

Table 1. Detailed Parameter Configuration

Component	Architecture	Parameters	Source Verification
Base Generative Model	Stable Diffusion v1.5 (U-Net + Text Enc.)	∼983 M	Matches official v1.5 release stats
— U-Net Backbone	Standard U-Net	(∼860 M)	Frozen
— Text Encoder	CLIP ViT-L/14	(∼123 M)	Frozen
Spatial Condition	ControlNet (Encoder Copy)	∼361 M	Derived from SD Encoder architecture
Total Parameter Count	**Mask2Derm Pipeline**	**∼1.34 B**	Base (983M) + ControlNet (361M)

[Figure: figures/loss_curve.png]

Figure 7. Training loss curve of the Mask-Conditioned ControlNet over 100 epochs.

4.2 Evaluation Metrics

4.2.1 Shape Consistency

To quantify how faithfully generated lesions adhere to the input mask, we pass each synthetic image through a pre-trained DeepLabV3+ segmentation network and compare the predicted mask against the input ground truth mask using:

- **Intersection over Union (IoU) / Jaccard Index [28]:**

$$\mathrm{IoU}(A, B) = \frac{|A \cap B|}{|A \cup B|} = \frac{TP}{TP + FP + FN} \tag{6}$$

- **Dice Similarity Coefficient [29, 30]:**

$$\mathrm{DSC}(A, B) = \frac{2|A \cap B|}{|A| + |B|} \tag{7}$$

4.2.2 Distributional Fidelity

- **Fréchet Inception Distance (FID) [31]:** Measures the Wasserstein-2 distance between real and synthetic feature distributions extracted from InceptionV3:

$$\mathrm{FID}(r, g) = \|\mu_r - \mu_g\|_2^2 + \mathrm{Tr}\Big(\Sigma_r + \Sigma_g - 2(\Sigma_r \Sigma_g)^{1/2}\Big) \tag{8}$$

  We compute bias-corrected FID via linear extrapolation over subset fractions {0.25, 0.50, 0.75, 1.0} to obtain a finite-sample-corrected estimate.
- **Kernel Inception Distance (KID) [32]:** An unbiased estimator based on Maximum Mean Discrepancy with a polynomial kernel, more reliable for small medical datasets.

4.2.3 Clinical Utility (TSTR)

Following Esteban et al. [33], we adopt the Train-on-Synthetic, Test-on-Real (TSTR) protocol: a segmentation model is trained solely on synthetic data and evaluated on a held-out real test set. A positive performance delta over an ImageNet-only baseline confirms that the synthetic data captures domain-specific features.

4.3 Baseline Comparisons

Table 2 places our FID results in the context of the broader literature. Direct numerical comparisons must be interpreted cautiously due to differences in dataset scale and conditioning modalities.

Table 2. Comparison of FID scores across model architectures and datasets. Lower FID indicates better distributional alignment.

Model Architecture	Dataset	Conditioning	FID Score	Ref.
Class-N-Diff (Setting 3)	ISIC 2018	Classifier Induced	2.42	[34]
DiT (Attributes + LLaVA)	ISIC	5 Attributes	5.75	[35]
Class-N-Diff (Setting 2)	ISIC 2018	Class Label	15.94	[34]
DermDiff	Fitzpatrick	Text (Skin Tone)	20.34	[36]
DiT (Unconditional)	ISIC	None	24.36	[35]
StyleGAN3-R	ISIC 2018	Unconditional	26.5	[37]
StyleGAN2	ISIC 2018	Unconditional	27.4	[37]
Class Conditional DiT	ISIC 2018	Class Label	45.77	[34]
Mask2Derm (Ours)	**HAM10000**	**Mask + Text**	**62.33**	–
StyleGAN2-ADA	HAM10000/MILK	Unconditional	∼65.5	[38]
DCGAN	ISIC 2018	Unconditional	66.5	[37]
DermDiff (Mixed)	ISIC + Fitzpatrick	Text	86.53	[36]
MedFusion	HAM10000	Latent	99.2	[12]
Stable Diffusion (Base)	HAM10000	Text	145.26	[39]

Direct numerical comparison should be interpreted cautiously due to dataset scale and conditioning differences.

4.4 Ablation Study

To isolate the contribution of each design choice, we conduct a controlled ablation by removing or replacing individual components and measuring the resulting FID, shape IoU, and TSTR performance. Table 3 summarizes the results.

Table 3. Ablation study: contribution of individual components.

Configuration	FID ↓	Shape IoU ↑	TSTR IoU ↑
Full model (Mask2Derm)	**62.33**	**0.8658**	**0.9254**
w/o optics simulation	71.4	0.8601	0.8940
w/o ControlNet (text-only SD)	145.26	0.3120	0.8120
CFG scale $w = 1.0$ (no guidance)	88.7	0.7810	0.8630
CFG scale $w = 15.0$ (over-guided)	74.1	0.8520	0.9010

Optics simulation contributes a consistent improvement across all metrics: removing it increases FID by ∼9 points and reduces TSTR IoU by 3.1%, confirming that optical domain alignment is a meaningful source of gain rather than a cosmetic post-process. **ControlNet conditioning** is the most critical component: replacing it with unconditional text-only Stable Diffusion collapses shape IoU to 0.31, demonstrating that the text prompt alone is insufficient for precise geometric control. **Guidance scale** shows a non-monotonic effect: too low ($w = 1.0$) undermines adherence to both the mask and prompt, while too high ($w = 15.0$) reduces diversity and slightly degrades FID without meaningfully improving shape consistency beyond the default

$w = 7.5$.

5 Results & Discussion

5.1 Quantitative Results

5.1.1 Distributional Alignment (FID & KID)

A well-known limitation of FID is its high bias under finite sample sizes, especially problematic in medical imaging. We address this by extrapolating FID linearly from subset fractions {25%, 50%, 75%, 100%} to an infinite sample limit ($1/N \to 0$). Figure 8a illustrates this extrapolation. Mask2Derm achieves a **bias-corrected FID of 62.33**, competitive with StyleGAN2-ADA on the same HAM10000 corpus (∼65.5) and substantially better than unguided Stable Diffusion (145.26). The Kernel Inception Distance is **KID** $= 0.07 \pm 0.01$, confirming distributional alignment on this unbiased estimator.

[Figure: `figures/fid_extrapolation_curve.png`]

(a) FID Extrapolation

[Figure: `figures/iou_distribution.png`]

(b) Shape Consistency (IoU)

Figure 8. Quantitative evaluation: (a) FID extrapolation to infinite sample size; (b) distribution of IoU scores measuring mask adherence.

5.1.2 Geometric Fidelity (Shape Consistency)

We generated 5,312 synthetic images using HAM10000 masks and processed them through a pre-trained DeepLabV3+ (ResNet101 backbone). The model achieved **mean IoU** $= 0.8658 \pm 0.1187$ and **mean DSC** $= 0.9222 \pm 0.0955$. Figure 8b shows a strongly left-skewed IoU distribution with the majority of samples exceeding 0.90, confirming that ControlNet effectively suppresses boundary hallucination common in unconditioned generative models.

5.2 Qualitative Results

Figure 9 presents real HAM10000 images (top row) alongside synthetic images generated from their corresponding masks (bottom row). The generated lesions reproduce complex stochastic textures—variegated pigmentation, irregular borders, pigment networks, dots and globules—at a quality visually indistinguishable from real acquisitions. The optics simulation endows synthetic images with the characteristic circular field-of-view, radial light falloff, and barrel distortion of real dermoscopes, preventing the "digitally perfect" look that typically betrays synthetic data.

Figure 10 demonstrates class-conditional generation. Malignant samples (top two rows) exhibit asymmetric borders, color variegation, and complex internal structures, while benign samples (bottom two rows) display uniform pigmentation and regular symmetrical shapes consistent with clinical presentations of nevi.

[Figure: figures/qualitative_comparison.png]

Figure 9. Qualitative comparison: real images from HAM10000 with lens simulation (top) versus synthetic images from Mask2Derm (bottom). Texture, color, and optical characteristics are closely matched.

[Figure: figures/benign_malignant_comparison.png]

Figure 10. Class-conditional generation: malignant lesions (top two rows) versus benign lesions (bottom two rows). The model captures class-discriminative morphological features.

5.3 Train on Synthetic, Test on Real (TSTR)

Setup. We fine-tuned a DeepLabV3+ segmentation model (M_{synth}) using *only* the 5,312 synthetic image–mask pairs from Mask2Derm. As a baseline (M_{base}), we evaluated a DeepLabV3+ model initialized with ImageNet weights and not exposed to any dermoscopy-specific data. Both models were evaluated on the held-out real HAM10000 test set.

Results. M_{synth} achieved mean IoU of 0.9254 ± 0.0412 and mean DSC of **0.9608**, significantly outperforming M_{base} (IoU $= 0.7910 \pm 0.1625$, DSC $= 0.8716$). The performance delta $\Delta = +0.1344$ IoU confirms that Mask2Derm generates semantically and structurally accurate data that generalizes zero-shot to real patient images.

[Figure: figures/tstr_iou_boxplot.png]

Figure 11. TSTR comparison: IoU distribution of the synthetic-finetuned model versus the ImageNet baseline on the real test set. The synthetic model exhibits superior median performance and lower variance.

Interpretation. The relatively low performance of the ImageNet baseline highlights the significant domain gap between natural images and dermoscopy. Our synthetic data successfully bridges this gap: by training exclusively on generated proxies, the model acquires domain-specific priors for lesion boundaries, texture gradients, and skin contrast that transfer to real data. This confirms that Mask2Derm is not merely visually coherent but carries genuine clinical signal.

5.4 Limitations

Despite strong results, several limitations warrant explicit discussion. First, Mask2Derm primarily generates lesions on fair skin tones, reflecting the bias jointly inherited from the underlying Stable Diffusion model and the HAM10000 dataset, which is heavily skewed toward European cohorts. This skin-tone bias is a critical concern for equitable clinical deployment and must be addressed before real-world adoption. Second, the physics-based optics simulation is a first-order approximation; it does not model polarized light, subsurface scattering, or device-specific chromatic aberrations. Third, the current FID of 62.33, while competitive on the full heterogeneous HAM10000 corpus, remains above the scores achieved by specialized models trained on curated single-class subsets. Finally, our TSTR evaluation uses a single segmentation architecture (DeepLabV3+); broader downstream validation across multiple architectures and tasks would further strengthen the clinical utility claim.

6 Conclusion

We presented *Mask2Derm*, a novel framework for generating high-fidelity, geometrically controllable synthetic dermoscopic images. By integrating ControlNet with an optics-inspired lens simulation, we addressed two critical challenges in medical image synthesis: strict adherence to lesion geometry and the replication of domain-specific optical characteristics.

Our experimental results demonstrate that the pipeline produces synthetic images that are both visually coherent and statistically aligned with real distributions (FID: 62.33, KID: 0.07). The shape consistency analysis revealed mean IoU of 0.8658 and mean DSC of 0.9222, confirming ControlNet's effectiveness as a spatial conditioning mechanism. The TSTR validation provided the most compelling evidence of clinical value: a segmentation model trained *only* on synthetic data surpassed an ImageNet baseline by +13.4% IoU on real patient images.

The skin-tone bias inherited from the underlying generative model and training corpus is a critical limitation we highlight explicitly rather than minimize. Future work will focus on (i) expanding training data to include diverse Fitzpatrick-scale skin tones, (ii) incorporating learnable optical aberrations for tighter device-specific simulation, and (iii) extending Mask2Derm to multi-class lesion generation with separate conditional pathways per diagnostic category. We consider equitable coverage across skin types a necessary condition for responsible clinical deployment, not an optional enhancement.

Acknowledgements

This work was supported by xxxxx under the R&D project carried out by xxxxx.

References

[1] M. Wang, X. Gao, and L. Zhang. Recent global patterns in skin cancer incidence, mortality, and prevalence. *Chinese medical journal*, 138(2):185–192, 2025.

[2] Philipp Tschandl, Cliff Rosendahl, and Harald Kittler. The ham10000 dataset, a large collection of multi-source dermatoscopic images of common pigmented skin lesions. *Scientific Data*, 5:180161, 2018.

[3] Shiyi Du, Xiaosong Wang, Yongyi Lu, Yuyin Zhou, Shaoting Zhang, Alan Yuille, Kang Li, and Zongwei Zhou. Boosting dermatoscopic lesion segmentation via diffusion models with visual and textual prompts, 2023.

[4] Ahmad B Qasim, Ivan Ezhov, Suprosanna Shit, Oliver Schoppe, Johannes C Paetzold, Anjany Sekuboyina, Florian Kofler, Jana Lipkova, Hongwei Li, and Bjoern Menze. Red-gan: Attacking class imbalance via conditioned generation. yet another perspective on medical image synthesis for skin lesion dermoscopy and brain tumor mri, 2021.

[5] Junjie Shentu, Matthew Watson, and Noura Al Moubayed. DiDGen: Diffusion-based Dual-task Synthesis for Dermoscopic Data Generation . In *proceedings of Medical Image Computing and Computer Assisted Intervention – MICCAI 2025*, volume LNCS 15970. Springer Nature Switzerland, September 2025.

[6] Zhaobin Xu. Skindualgen: Prompt-driven diffusion for simultaneous image-mask generation in skin lesions, 2025.

[7] Lvmin Zhang and Maneesh Agrawala. Adding conditional control to text-to-image diffusion models. *arXiv preprint arXiv:2302.05543*, 2023.

[8] F. Nachbar, W. Stolz, T. Merkle, A. B. Cognetta, T. Vogt, M. Landthaler, P. Bilek, O. Braun-Falco, and G. Plewig. The ABCD rule of dermatoscopy: High prospective value in the diagnosis of doubtful melanocytic skin lesions. *Journal of the American Academy of Dermatology*, 30(4):551–559, 1994. PMID: 8157780.

[9] Olaf Ronneberger, Philipp Fischer, and Thomas Brox. U-net: Convolutional networks for biomedical image segmentation. In *Medical Image Computing and Computer-Assisted Intervention – MICCAI 2015*, pages 234–241. Springer, 2015.

[10] Noel C. F. Codella, David Gutman, M. Emre Celebi, Brian Helba, Michael A. Marchetti, Stephen W. Dusza, Aadi Kalloo, Konstantinos Liopyris, Nabin Mishra, Harald Kittler, and Allan Halpern. Skin lesion analysis toward melanoma detection: A challenge at the 2017 international symposium on biomedical imaging (isbi), hosted by the international skin imaging collaboration (isic). *arXiv preprint arXiv:1710.05006*, 2018.

[11] Noel C. F. Codella, Veronica Rotemberg, Philipp Tschandl, M. Emre Celebi, Stephen Dusza, David Gutman, Brian Helba, Aadi Kalloo, Konstantinos Liopyris, Michael Marchetti, Harald Kittler, and Allan Halpern. Skin lesion analysis toward melanoma detection 2018: A challenge hosted by the international skin imaging collaboration (isic). *arXiv preprint arXiv:1902.03368*, 2019.

[12] Ozan Oktay, Jo Schlemper, Loic Le Folgoc, Matthew Lee, Mattias Heinrich, Kazunari Misawa, Kensaku Mori, Steven McDonagh, Nils Y. Hammerla, Bernhard Kainz, Ben Glocker, and Daniel Rueckert. Attention u-net: Learning where to look for the pancreas. 2018.

[13] Liang-Chieh Chen, Yukun Zhu, George Papandreou, Florian Schroff, and Hartwig Adam. Encoder-decoder with atrous separable convolution for semantic image segmentation (deeplabv3+). In *Proceedings of the European Conference on Computer Vision (ECCV)*, pages 801–818, 2018.

[14] Jieneng Chen, Yongyi Lu, Qihang Yu, Xiangde Luo, Ehsan Adeli, Yan Wang, Le Lu, Alan L. Yuille, and Yuyin Zhou. Transunet: Transformers make strong encoders for medical image segmentation. *arXiv preprint arXiv:2102.04306*, 2021.

[15] Hu Cao, Yueyue Wang, Joy Chen, Dongsheng Jiang, Xiaopeng Zhang, Qi Tian, and Manning Wang. Swin-unet: Unet-like pure transformer for medical image segmentation. *arXiv preprint arXiv:2105.05537*, 2021.

[16] Aayushi Bansal, Rewa Sharma, and Mamta Kathuria. A systematic review on data scarcity problem in deep learning: Solution and applications. *ACM Computing Surveys*, 54(10s):1–29, 2022.

[17] Bill Cassidy, Connah Kendrick, Andrzej Brodzicki, Joanna Jaworek-Korjakowska, and Moi Hoon Yap. Analysis of the isic image datasets: Usage, benchmarks and recommendations. *Medical Image Analysis*, 75:102305, 2022.

[18] Ian J. Goodfellow, Jean Pouget-Abadie, Mehdi Mirza, Bing Xu, David Warde-Farley, Sherjil Ozair, Aaron Courville, and Yoshua Bengio. Generative adversarial nets. In *Advances in Neural Information Processing Systems*, volume 27, pages 2672–2680, 2014.

[19] Ira Ktena, Olivia Wiles, Isabela Albuquerque, Sylvestre-Alvise Rebuffi, Ryutaro Tanno, Abhijit Guha Roy, Shekoofeh Azizi, Danielle Belgrave, Pushmeet Kohli, Taylan Cemgil, et al. Generative models improve fairness of medical classifiers under distribution shifts. *Nature Medicine*, 30:1166–1173, 2024.

[20] Alceu Bissoto, Fábio Perez, Eduardo Valle, and Sandra Avila. Skin lesion synthesis with generative adversarial networks. In *International Workshop on Computer-Assisted and Robotic Endoscopy, Clinical Image-Based Procedures, and Skin Image Analysis*, pages 294–302. Springer, 2018.

[21] Ting-Chun Wang, Ming-Yu Liu, Jun-Yan Zhu, Andrew Tao, Jan Kautz, and Bryan Catanzaro. High-resolution image synthesis and semantic manipulation with conditional gans. In *Proceedings of the IEEE Conference on Computer Vision and Pattern Recognition (CVPR)*, pages 8798–8807, 2018.

[22] Alceu Bissoto, Eduardo Valle, and Sandra Avila. GAN-based data augmentation and anonymization for skin-lesion analysis: A critical review. In *Proceedings of the IEEE/CVF Conference on Computer Vision and Pattern Recognition (CVPR) Workshops*, pages 84–93, 2021.

[23] Jonathan Ho, Ajay Jain, and Pieter Abbeel. Denoising diffusion probabilistic models. In *Advances in Neural Information Processing Systems*, volume 33, pages 6840–6851, 2020.

[24] Peng Yang, Zhuochao Chen, Xiaoxuan Sun, and Xiaodan Deng. Better with less: Efficient and accurate skin lesion segmentation enabled by diffusion model augmentation. *Electronics*, 14(17):3359, 2025.

[25] Zhaobin Xu. Skindualgen: Prompt-driven diffusion for simultaneous image-mask generation in skin lesions, 2025.

[26] Shiyi Du, Xiaosong Wang, Yongyi Lu, Yuyin Zhou, Shaoting Zhang, Alan Yuille, Kang Li, and Zongwei Zhou. Boosting skin lesion segmentation via diffusion models with visual and textual prompts, 2024.

[27] Robin Rombach, Andreas Blattmann, Dominik Lorenz, Patrick Esser, and Björn Ommer. High-resolution image synthesis with latent diffusion models. In *Proceedings of the IEEE/CVF Conference on Computer Vision and Pattern Recognition (CVPR)*, pages 10684–10695, 2022.

[28] Paul Jaccard. Étude comparative de la distribution florale dans une portion des alpes et du jura. *Bulletin de la Société Vaudoise des Sciences Naturelles*, 37(142):547–579, 1901.

[29] Lee R Dice. Measures of the amount of ecologic association between species. *Ecology*, 26(3):297–302, 1945.

[30] Thorvald Sørensen. A method of establishing groups of equal amplitude in plant sociology based on similarity of species content and its application to analyses of the vegetation on danish commons. *Kongelige Danske Videnskabernes Selskab Biologiske Skrifter*, 5(4):1–34, 1948.

[31] Martin Heusel, Hubert Ramsauer, Thomas Unterthiner, Bernhard Nessler, and Sepp Hochreiter. Gans trained by a two time-scale update rule converge to a local nash equilibrium. In *Advances in Neural Information Processing Systems*, volume 30, pages 6626–6637, 2017.

[32] Mikołaj Bińkowski, Danica J Sutherland, Michael Arbel, and Arthur Gretton. Demystifying mmd gans. In *International Conference on Learning Representations*, 2018.

[33] Cristóbal Esteban, Stephanie L Hyland, and Gunnar Rätsch. Real-valued (medical) time series generation with recurrent conditional gans. *arXiv preprint arXiv:1706.02633*, 2017.

[34] M. S. Munia and Others. Class-n-diff: Classification-induced diffusion model can make fair skin cancer diagnosis. *arXiv preprint arXiv:2510.16887*, 2025.

[35] M. S. Munia and Others. Prompting medical vision-language models to mitigate diagnosis bias by generating realistic dermoscopic images. *arXiv preprint arXiv:2504.01838*, 2025.

[36] M. S. Munia and Others. Dermdiff: Generative diffusion model for mitigating racial biases in dermatology diagnosis. *arXiv preprint arXiv:2503.17536*, 2025.

[37] Authors. Synthetic melanoma image generation and evaluation with different generative adversarial networks (gans). In *2023 Innovations in Cancer Prevention and Research Conference*, 2023.

[38] Sanyam Jain and Others. Skingenbench: Generative model and preprocessing effects for synthetic dermoscopic augmentation in melanoma diagnosis. *arXiv preprint arXiv:2512.17585*, 2025.

[39] Stability AI & CompVis. Stable Diffusion v1.5: Latent text-to-image diffusion model. `https://github.com/CompVis/stable-diffusion`, 2022. Foundation model used in experiments.