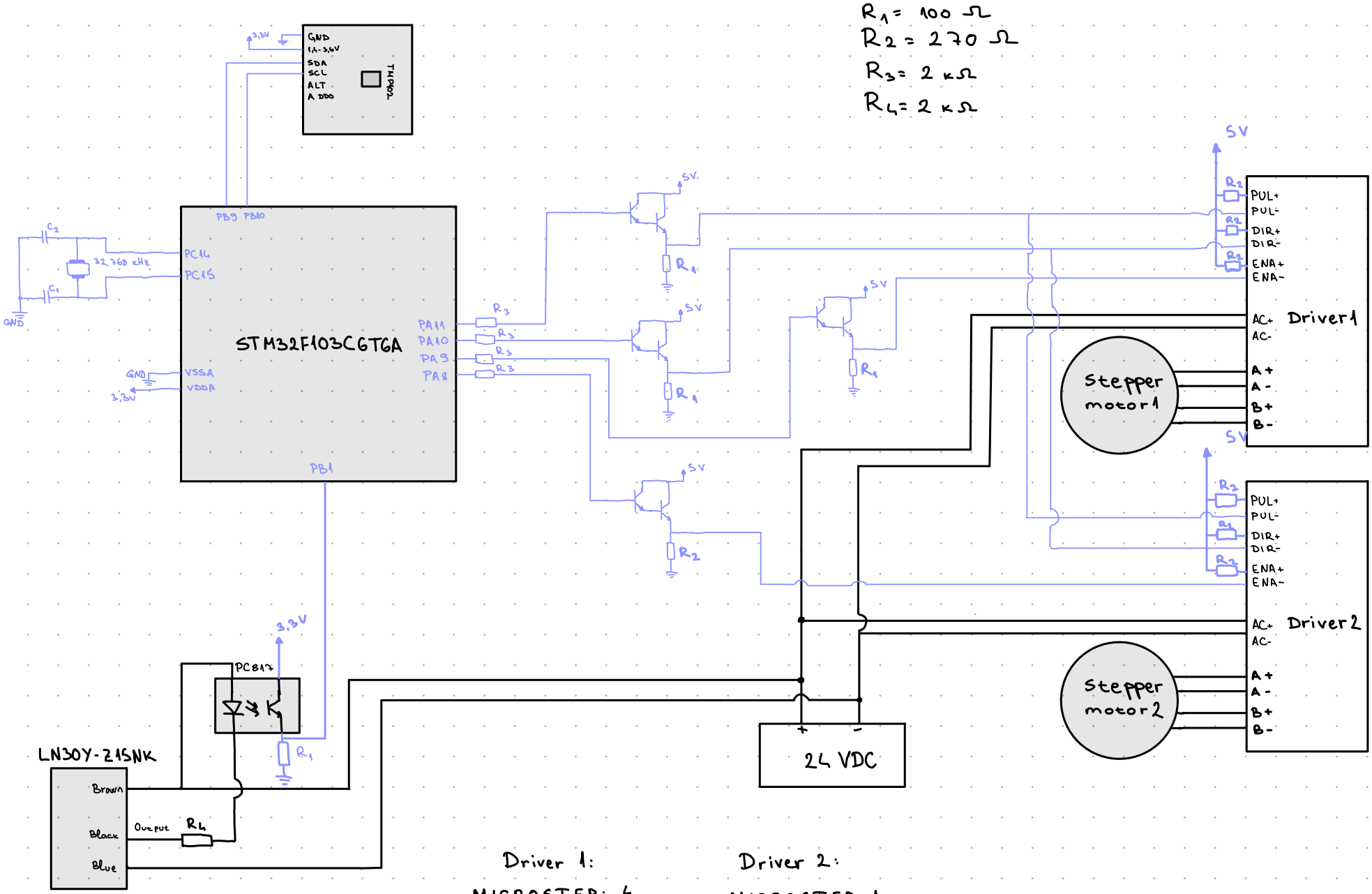

Driver 1:

MICROSTEP: 4 ⇓ 800 st/rev

SW5 → ON
SW6 → OFF
SW7 → ON
SW8 → ON

Driver 2:

MICROSTEP: 1 ⇓ 200 st/rev

SW5 → ON
SW6 → ON
SW7 → ON
SW8 → ON