STM32_Sheet

File: stm32_sheet.kicad_sch

AFE_Sensor_Sheet

File: sensor_sheet.kicad_sch

Features_sheet

File: features_sheet.kicad_sch

Power_And_Connectors_Sheet

File: power_and_connectors.kicad_sch

Author: Paul Capgras
Rev 4.0 (=Pre-layout), Rev 4.1 (=Post-layout), Rev 4.2 (=Post PE's review)
Rev 4.3 (=Post review)

Company: LNIS

Sheet: /
File: Toxic_Detection_v4.0.kicad_sch

Title: Toxic_Detection_PCB

Size: A4	Date: 2026-02-12	**Rev: 4.3**
KiCad E.D.A. 9.0.7		Id: 1/5

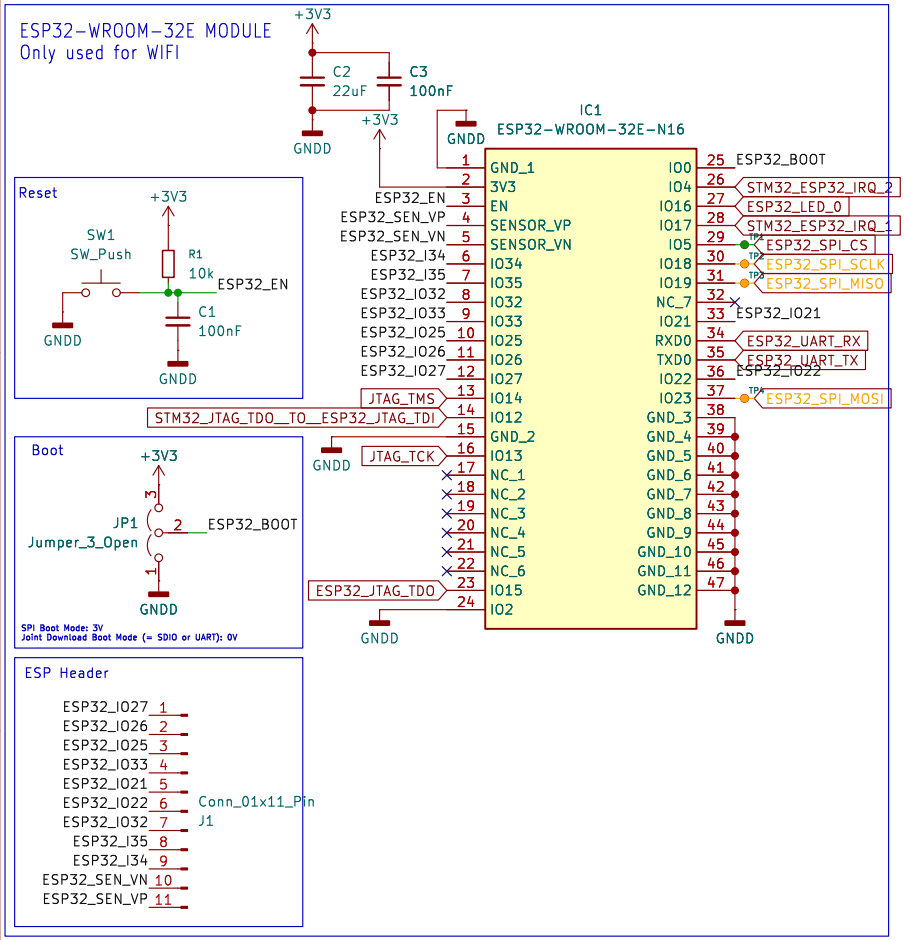

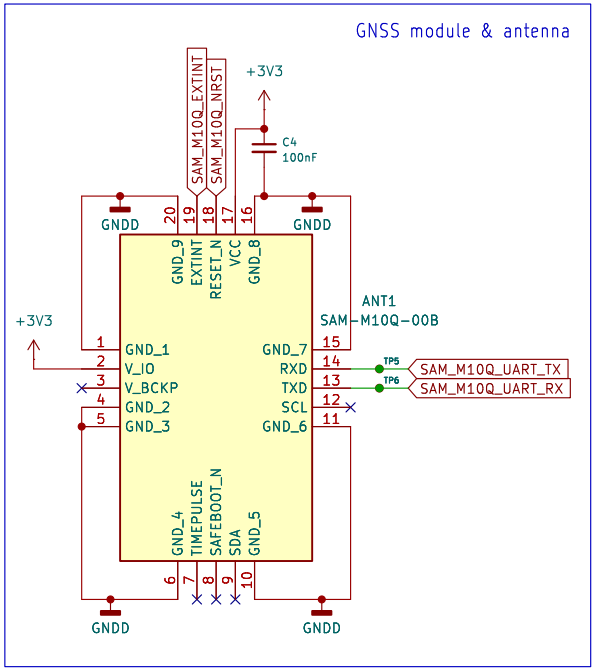

Author: Paul Capgras

Company: LNIS

Sheet: /Features_sheet/
File: features_sheet.kicad_sch

Title: Toxic_Detection_PCB

Size: A4	Date: 2026-02-12	**Rev: 4.3**
KiCad E.D.A. 9.0.7		Id: 2/5

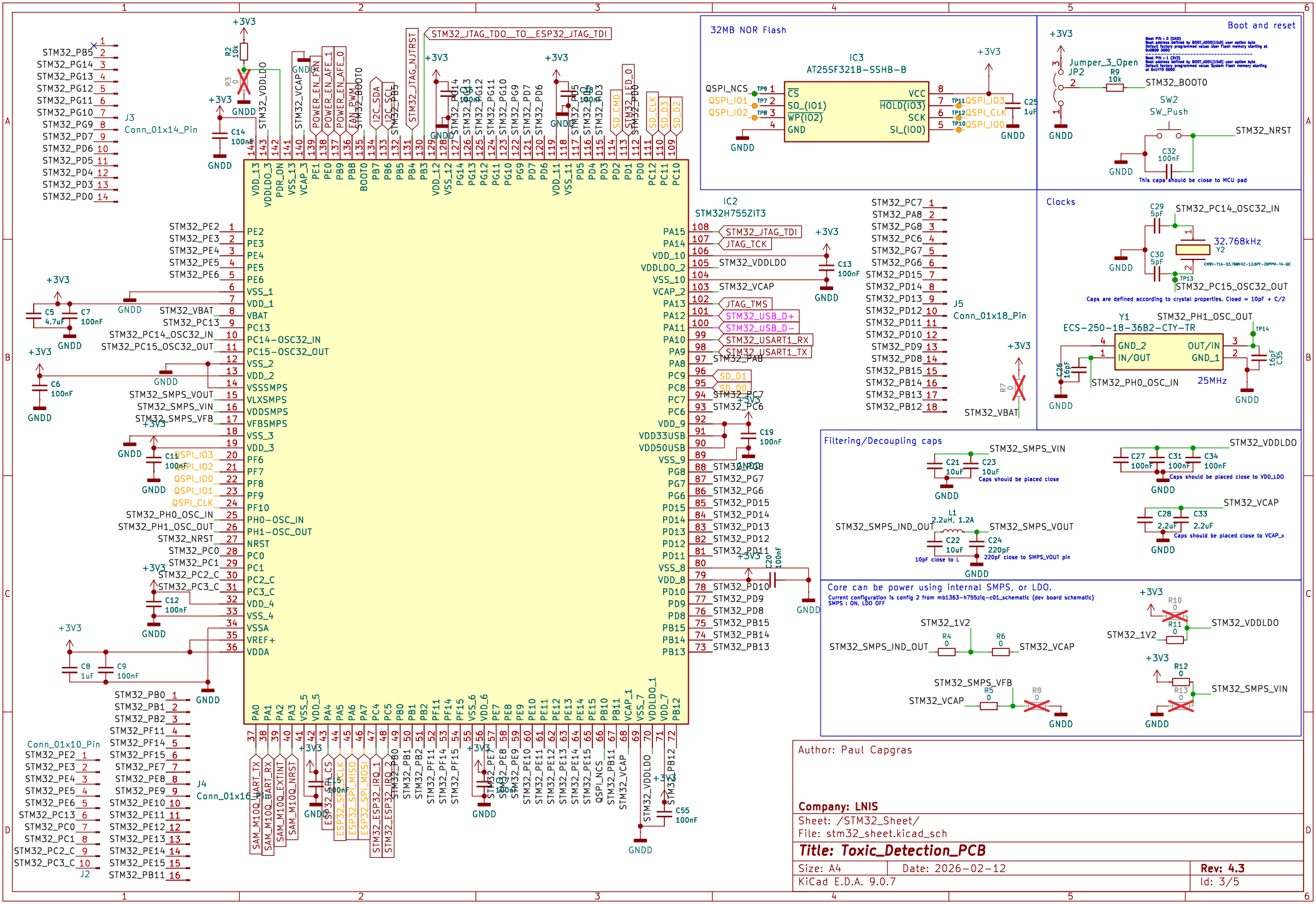
32MB NOR Flash
IC3
AT25SF321B-SSHB-B
Boot and reset
Jumper_3_Open
JP2
R9
10k
STM32_BOOT0
SW2
SW_Push
STM32_NRST
C32
100nF
This caps should be close to MCU pad
Clocks
C29
5pF
STM32_PC14_OSC32_IN
32.768kHz
Y2
C30
5pF
STM32_PC15_OSC32_OUT
Caps are defined according to crystal properties. Cload = 10pF + C/2
Y1
ECS-250-18-36B2-CTY-TR
STM32_PH1_OSC_OUT
GND_2
IN/OUT
OUT/IN
GND_1
25MHz
C26
16pF
STM32_PH0_OSC_IN
C35
16pF
IC2
STM32H755ZIT3
J3
Conn_01x14_Pin
J4
Conn_01x16_Pin
J2
Conn_01x10_Pin
J5
Conn_01x18_Pin
STM32_JTAG_TDO__TO__ESP32_JTAG_TDI
Filtering/Decoupling caps
STM32_SMPS_VIN
C21
10uF
C23
10uF
Caps should be placed close
STM32_VDDLDO
C27
100nF
C31
100nF
C34
100nF
Caps should be placed close to VDD_LDO
STM32_VCAP
C28
2.2uF
C33
2.2uF
Caps should be placed close to VCAP_x
STM32_SMPS_IND_OUT
L1
2.2uH, 1.2A
STM32_SMPS_VOUT
C22
10uF
C24
220pF
10pF close to L
220pF close to SMPS_VOUT pin
Core can be power using internal SMPS, or LDO.
Current configuration is config 2 from mb1363-h755zlq-c01_schematic (dev board schematic)
SMPS : ON, LDO OFF
STM32_1V2
R4
0
R6
0
R5
0
R8
0
R10
0
R11
0
R12
0
R13
0
Author: Paul Capgras
Company: LNIS
Sheet: /STM32_Sheet/
File: stm32_sheet.kicad_sch
Title: Toxic_Detection_PCB
Size: A4
Date: 2026-02-12
Rev: 4.3
KiCad E.D.A. 9.0.7
Id: 3/5

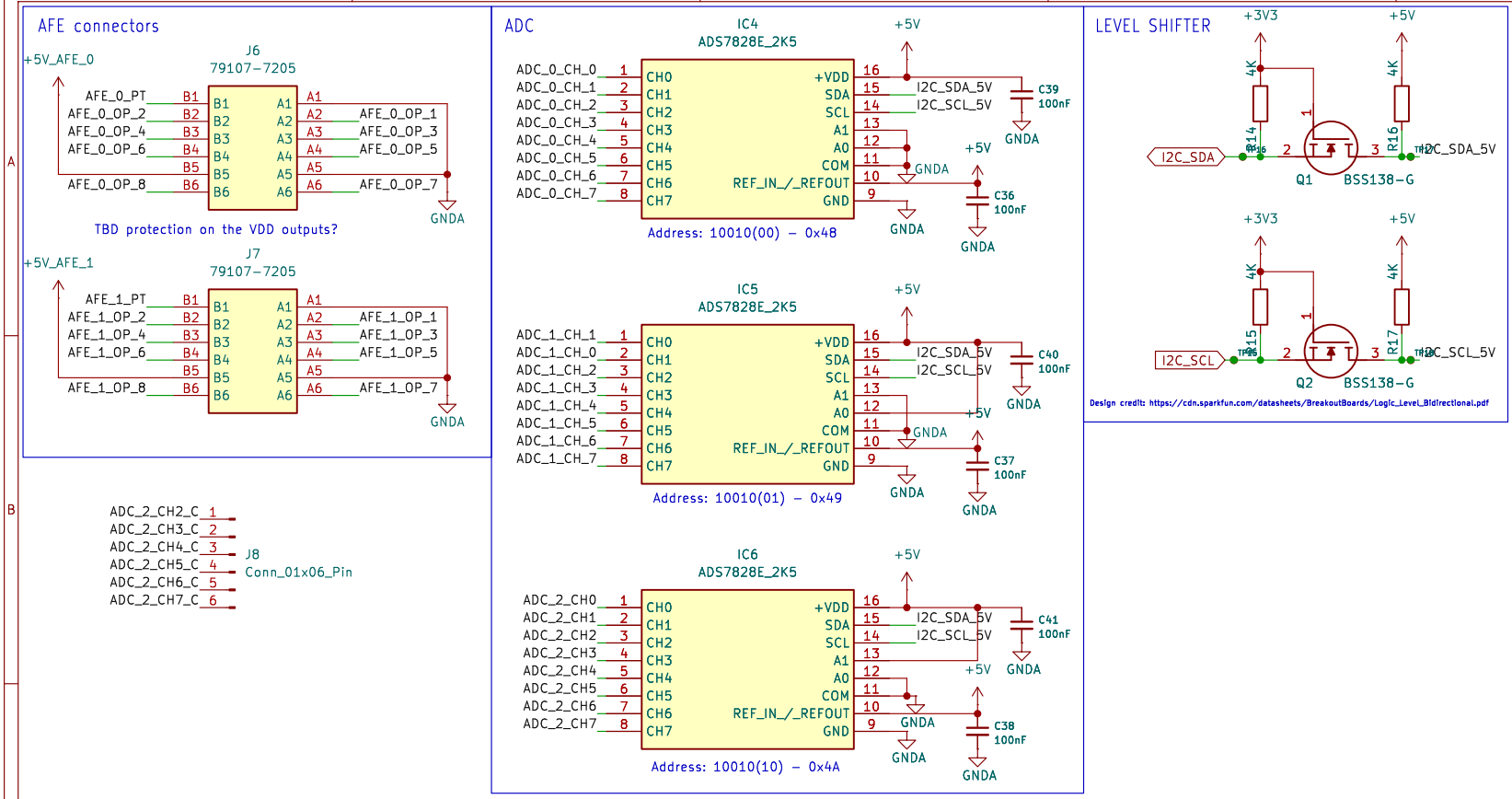

Author: Paul Capgras

Company: LNIS

Sheet: /AFE_Sensor_Sheet/
File: sensor_sheet.kicad_sch

Title: Toxic_Detection_PCB

Size: A4	Date: 2026-02-12	**Rev: 4.3**
KiCad E.D.A. 9.0.7		Id: 4/5

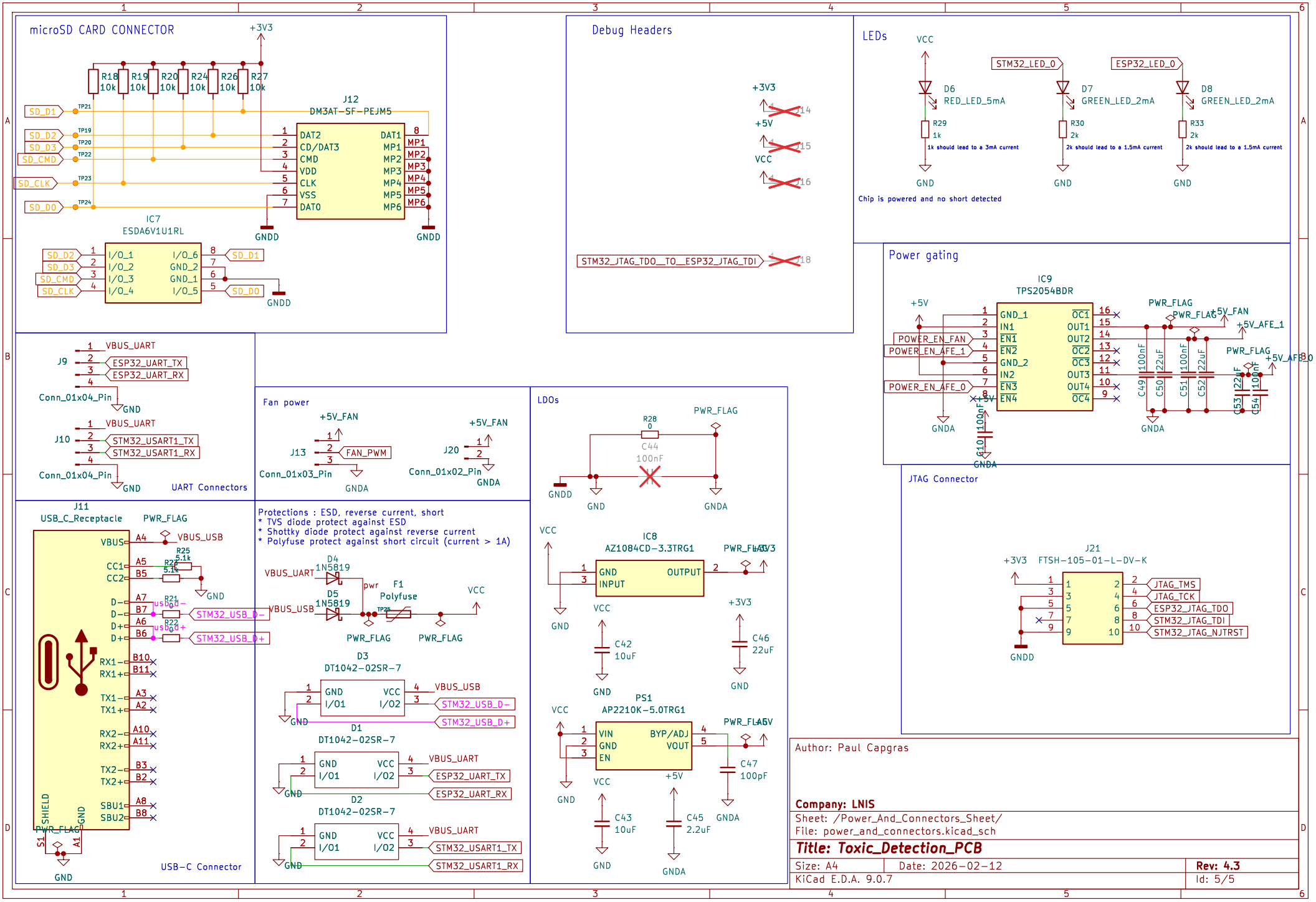
microSD CARD CONNECTOR
+3V3
R18 10k
R19 10k
R20 10k
R24 10k
R26 10k
R27 10k
J12
DM3AT-SF-PEJM5
SD_D1
SD_D2
SD_D3
SD_CMD
SD_CLK
SD_D0
DAT2
CD/DAT3
CMD
VDD
CLK
VSS
DAT0
DAT1
MP1
MP2
MP3
MP4
MP5
MP6
GNDD
IC7
ESDA6V1U1RL
I/O_1
I/O_2
I/O_3
I/O_4
I/O_6
GND_2
GND_1
I/O_5
Debug Headers
+3V3
+5V
VCC
STM32_JTAG_TDO__TO__ESP32_JTAG_TDI
LEDs
VCC
STM32_LED_0
ESP32_LED_0
D6
RED_LED_5mA
D7
GREEN_LED_2mA
D8
GREEN_LED_2mA
R29 1k
1k should lead to a 3mA current
R30 2k
2k should lead to a 1.5mA current
R33 2k
2k should lead to a 1.5mA current
GND
Chip is powered and no short detected
Power gating
IC9
TPS2054BDR
+5V
POWER_EN_FAN
POWER_EN_AFE_1
POWER_EN_AFE_0
GND_1
IN1
EN1
EN2
GND_2
IN2
EN3
EN4
OC1
OUT1
OUT2
OC2
OC3
OUT3
OUT4
OC4
PWR_FLAG
+5V_FAN
+5V_AFE_1
+5V_AFE_0
C49 100nF
C50 22uF
C51 100nF
C52 22uF
C53 22uF
C54 100nF
C10 100nF
GNDA
J9
VBUS_UART
ESP32_UART_TX
ESP32_UART_RX
Conn_01x04_Pin
J10
STM32_USART1_TX
STM32_USART1_RX
UART Connectors
Fan power
J13
FAN_PWM
Conn_01x03_Pin
J20
Conn_01x02_Pin
LDOs
R28 0
C44 100nF
GNDD
IC8
AZ1084CD-3.3TRG1
GND
INPUT
OUTPUT
C42 10uF
C46 22uF
PS1
AP2210K-5.0TRG1
VIN
BYP/ADJ
VOUT
EN
C43 10uF
C45 2.2uF
C47 100pF
J11
USB_C_Receptacle
VBUS
CC1
CC2
D-
D+
RX1-
RX1+
TX1-
TX1+
RX2-
RX2+
TX2-
TX2+
SBU1
SBU2
SHIELD
VBUS_USB
R25 5.1k
R26 5.1k
R21 0
R22 0
STM32_USB_D-
STM32_USB_D+
USB-C Connector
Protections : ESD, reverse current, short
* TVS diode protect against ESD
* Shottky diode protect against reverse current
* Polyfuse protect against short circuit (current > 1A)
D4 1N5819
D5 1N5819
F1 Polyfuse
D3 DT1042-02SR-7
D1 DT1042-02SR-7
D2 DT1042-02SR-7
JTAG Connector
J21
FTSH-105-01-L-DV-K
JTAG_TMS
JTAG_TCK
ESP32_JTAG_TDO
STM32_JTAG_TDI
STM32_JTAG_NJTRST
Author: Paul Capgras
Company: LNIS
Sheet: /Power_And_Connectors_Sheet/
File: power_and_connectors.kicad_sch
Title: Toxic_Detection_PCB
Size: A4
Date: 2026-02-12
Rev: 4.3
KiCad E.D.A. 9.0.7
Id: 5/5