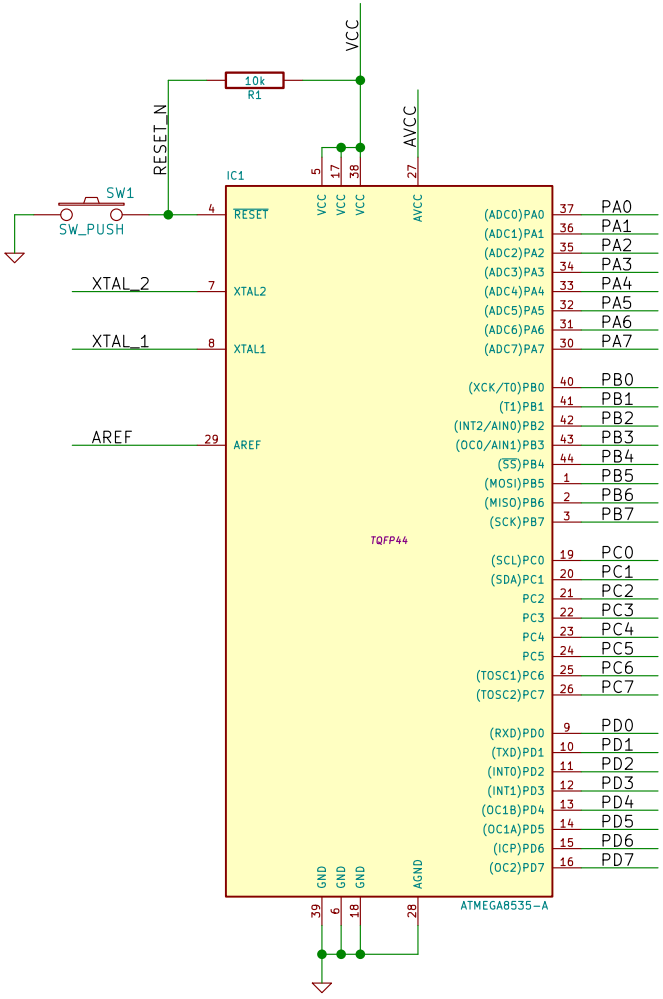

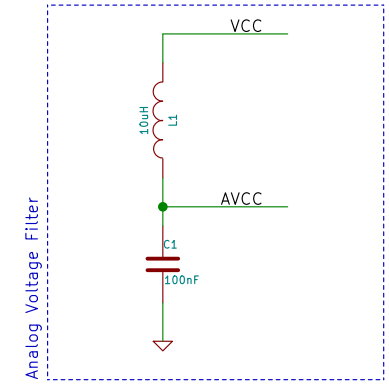

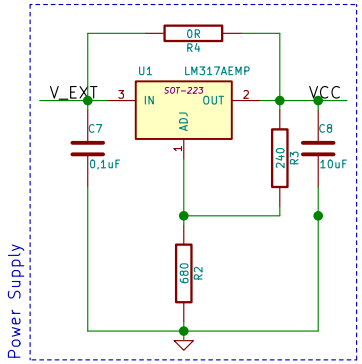

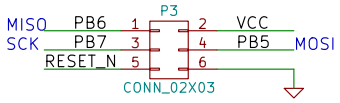

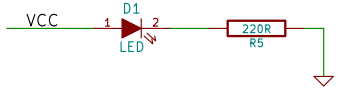

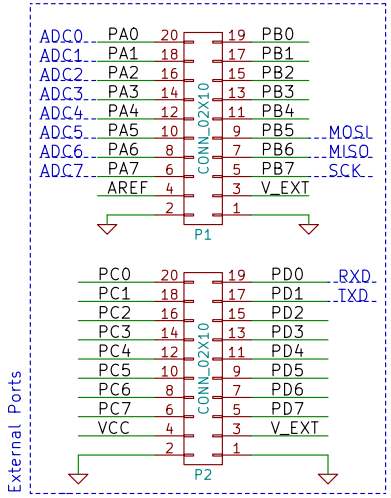

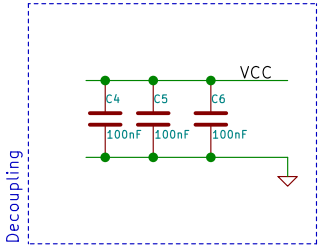

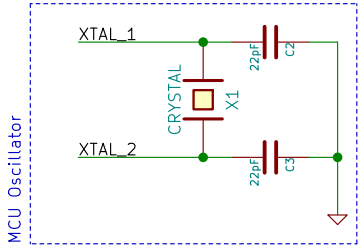

Sheet: /
File: RF_Module_AT90.sch

Title: AT90S8535 Control Module

Size: A4	Date: 16.12.2014	Rev: 0
KiCad E.D.A. kicad (2014-08-18 BZR 5081)-product		Id: 1/1