Design Guide: TIDM-02007

Dual-Axis Motor Drive Using Fast Current Loop (FCL) and SFRA on a Single MCU Reference Design

Description

This reference design presents a dual-axis motor drive using Fast Current Loop (FCL) and Software Frequency Response Analyzer (SFRA) technologies on a single C2000™ controller. The FCL takes CPU and CLA parallel processing technique to achieve a substantial improvement in control bandwidth and phase margin, to reduce the latency between feedback sampling and PWM update, to achieve higher control bandwidth and maximum modulation index, to improve DC bus utilization by the drive and increase speed range of the motor. Integrated the SFRA tool enables developers to quickly measure the frequency response of the application to tune speed and current controllers. Given the system-level integration and performance of C2000 series MCUs have the ability to support dual-axis motor drive requirements simultaneously that delivers very robust position control with higher performance. The software is released within C2000WARE MotorControl SDK.

Resources

TIDM-02007	Design Folder
LAUNCHXL-F28379D	Tool Folder
LAUNCHXL-F280049C	Tool Folder
BOOSTXL-3PHGANINV	Tool Folder
C2000WARE-MOTORCONTROL-SDK	Tool Folder

Search Our E2E™ support forums

Features

- Three-phase GaN inverter with wide-input voltage from 12-V to 60-V and 7-Arms, 10-A peak output current per phase
- Precision-phase current sensing with high accuracy (0.1%) based inline shunt resistor on BoosterPack™
- Implement dual-axis motor drive with Fast Current Loop (FCL) on a single F2837x or F28004x MCU using the existing hardware kits
- Working software is compatible with F2837x or F28004x as a starting point for those with expertise or limited expertise
- Enables outer position and velocity loop, and inner torque loop using FCL technique simultaneously to achieve fast response on each motor
- Integrated SFRA tool to support tuning speed and current loops online separately
- Incremental system builds are designed to verify the major software modules used in the system
- Low PWM update latency (1.02 µs on F2837x, 2.02 µs on F28004x) to achieve higher control bandwidth and modulation index

Applications

- Servo drive power supply module
- Servo drive power stage module
- Vacuum robot

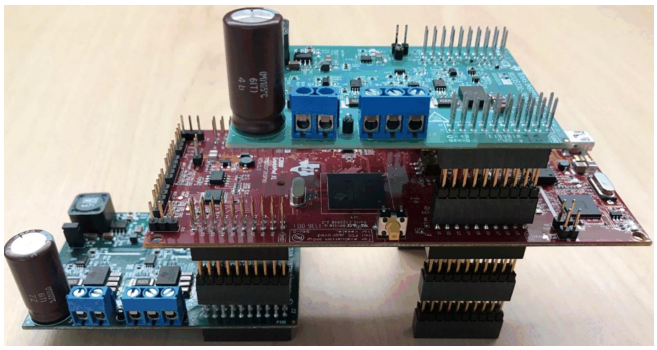

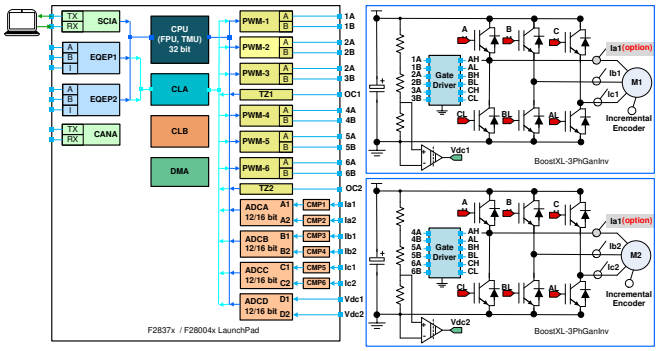

Copyright © 2019, Texas Instruments Incorporated

An IMPORTANT NOTICE at the end of this TI reference design addresses authorized use, intellectual property matters and other important disclaimers and information.

1 System Description

High-performance motor drives in servo drive and robotics applications are expected to provide high precision and high control bandwidth of current, speed, and position loops for superior control of end applications such as robotics, CNC machines, and so forth. Since the current loop makes up the inner most control loop, it must have a high bandwidth to enable the outer speed or position loops to be faster. Hence, a high bandwidth Fast Current Loop (FCL) is needed in high performance industrial servo control applications. However, the delays due to ADC conversion and algorithm execution limit the current controller bandwidth to about a tenth of the sampling frequency.

This reference design shows the implementation of fast current loop on a F2837x/F28004x C2000 controller running two motors simultaneously, and verifies the frequency response of the control loops using TI's SFRA tool. The control bandwidth of fast current loop and the operating speed range of motor are experimentally verified. This design guide documents the test platform setup, procedure and the quantitative results obtained. It is important to note that when the PWM carrier frequency is 10 KHz, the current loop bandwidth obtained is 5 KHz for a phase margin of 45° over a wide speed range compared to the traditional MCU based systems, FCL software can potentially triple a drive system's torque response and double its maximum speed without increasing the PWM carrier frequency.

The F2837x and F28004x series of C2000 MCU enable a new value point for dual-axis drives that also delivers very robust motion-control performance. The value comes not only from the achievable control performance and ability to drive two motors concurrently, but also from the high degree of on-chip integration of other key electronic system functions. Since both F2837x and F28004x devices support CPU and CLA cores, CPU offload encoder feedback and torque control processing to the CLA to maximize the performance of dual-axis servo drive.

1.1 Key System Specifications

Table 1. Key System Specifications

PARAMETER	SPECIFICATIONS
DC Input Voltage	24 V (12 to 60 V, 80 V absolute max)
Maximum three-phase output current	7 A_{RMS}, 10 A (peak) per phase
Maximum sampling current	±16.5 A (1.65-V offset bias, 3.3-V scaled range)
Maximum input power	200 W (at 24 V, each motor every BoosterPack)
Working Temperature range	Ambient temperature: –40ºC to 85ºC
Switching PWM Frequency	10 to 30 kHz (single sampling) / 15 kHz (double sampling) on F28004x 10 to 40 kHz (single sampling) / 20 kHz (double sampling) on F2837x
Running frequency range	0~400 Hz at the M-2310P motor
Maximum efficiency at 10-kHz PWM frequency	90% at rate power of the M-2310P motor
Maximum Modulation Index at 10-kHz PWM frequency	96% (single sampling), 92% (double sampling) on F28004x 98% (single sampling), 96% (double sampling) on F2837x
PWM Update Latency	2.02 µs (F28004x) per motor 1.02 µs (F2837x) per motor
Software/Hardware Protection	Overtemperature Overcurrent protection Undervoltage and overvoltage protection

Copyright © 2019, Texas Instruments Incorporated

2 System Overview

2.1 Block Diagram

Figure 1 illustrates the dual-axis motor drive based a single C2000 MCU system block diagram of the TIDM-02007 reference design, which includes the following elements:

- One controller board, a TMS320F28379D LaunchPad™ or TMS320F280049C LaunchPad
  - Higher clock frequency CPU, Trigonometric Math Unit (TMU) and control law accelerator (CLA) that parallel process floating point calculation of FOC and FCL algorithm to get high speed, precision performance.
  - Four high-speed precision 12-bit and 16-bit ADCs on F2837x, or three high speed precision 12-bit ADCs on F28004x for sensing the motor phase current and DC bus voltage.
  - Two independent Enhanced Quadrature Encoder Pulse (QEP)-based encoder connectors for sensing the exact rotor position for dual-axis motor drive.
  - On-board USB can work as both a debugger for debugging and programming interface and a virtual COM port to a PC with a serial monitor running for SFRA software.
- Two Inverter boards, BOOSTXL-3PHGANINV
  - Wide Input Voltage Range 12-V to 60-V with 7-ARMS Output Current per Phase.
  - Precision in-line phase current sensing with 5-mΩ shunt for motor drive that can be connected to the ADC of F28379D or F280049C.
  - Three LMG5200 GaN half-bridge power stages with embedded driver that are compatible interface With 3.3-V I/O for F28379D or F280049C LaunchPad.

Figure 1. TIDM-02007 Dual-Axis Motor Drive System Block Diagram

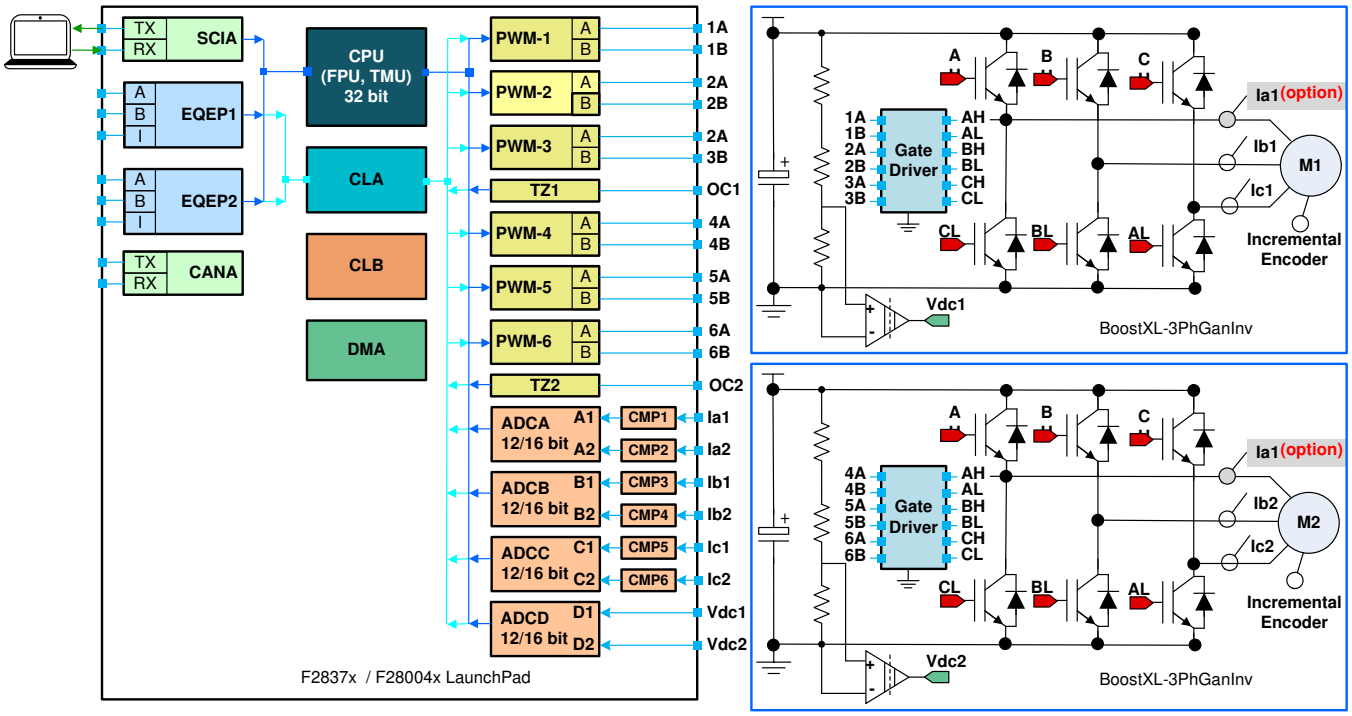

2.2 Design Considerations

The major challenge in implementing the current loop lies in reducing the latency between feedback sampling and PWM updates. In traditional control schemes, this latency is typically one sampling period, thereby, delaying the control action. For a fast current loop, this delay must be as small as possible to improve the loop performance over the wide operating speed range of the motor. Typically, a latency of one microsecond or less is considered acceptable in many applications that requires a controller with a

Copyright © 2019, Texas Instruments Incorporated

fast compute engine, a fast ADC, low latency control peripherals and a superior control algorithm on a single F2837x or F28004x, it is possible to run two independent FCLs in less than 1 µs on F2837x or 2 µs on F28004x separately while still supporting the high control bandwidth and double sampling of each axis. In order to maintain the goal of measuring the currents of each motor during voltage transitions, the ADC double sampling is interleaved between each motor so that the sampling and subsequent FOC processing does not need to happen back to back. The motor 1 carrier lags motor 2 by a fixed 90°, then the ADC sampling period is consistent across both motors but interleaved between them as shown in Figure 2. Each ADC sample and conversion is followed by the C2000 CPU performing the FOC algorithm and updating the PWMs. In this way, the sample-to-PWM update remains very consistent for each execution, whether it's the first or second sample of motor 1 or motor 2.

Figure 2. Motor Phase Current Sampling and PWM Output Update for Dual-Axis Motor Drive

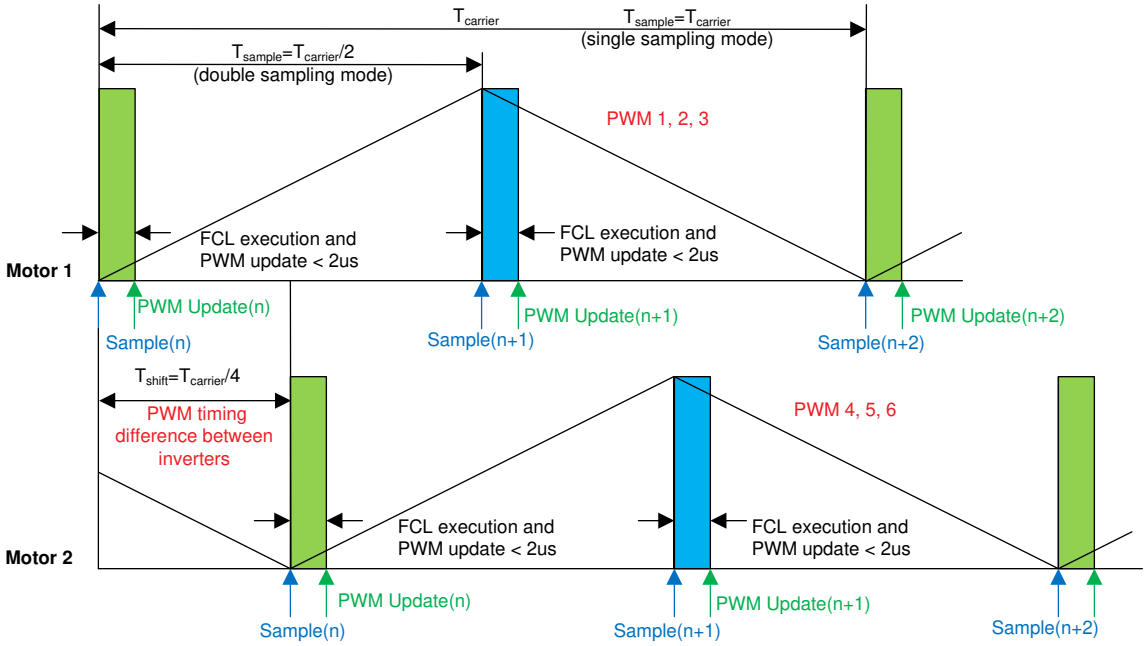

2.3 Highlighted Products

2.3.1 TMS320F28004x

TMS320F28004x is a powerful 32-bit floating-point microcontroller unit (MCU) that lets designers incorporate crucial control peripherals, differentiated analog, and nonvolatile memory on a single device. The real-time control subsystem is based on TI's 32-bit C28x CPU, which provides 100 MHz of signal processing performance. The C28x CPU is further boosted by the new TMU extended instruction set, which enables fast execution of algorithms with trigonometric operations commonly found in transforms and torque loop calculations. The CLA allows significant offloading of common tasks from the main C28x CPU. The CLA is an independent 32-bit floating-point math accelerator that executes in parallel with the CPU. Additionally, the CLA has its own dedicated memory resources and it can directly access the key peripherals that are required in a typical control system. High-performance analog blocks are integrated on the F28004x MCU to further enable system consolidation. Three separate 12-bit ADCs provide precise and efficient management of multiple analog signals, which ultimately boosts system throughput. Seven PGAs on the analog front end enable on-chip voltage scaling before conversion. Seven analog comparator modules provide continuous monitoring of input voltage levels for trip conditions. The TMS320C2000™ devices contain industry-leading control peripherals with frequency-independent ePWM/HRPWM and eCAP allow for a best-in-class level of control to the system. A specially enabled device variant, TMS320F28004xC, allows access to the Configurable Logic Block (CLB) for additional interfacing features.

Copyright © 2019, Texas Instruments Incorporated

2.3.2 TMS320F2837x

TMS320F2837xD is a powerful 32-bit floating-point microcontroller unit (MCU) designed for advanced closed-loop control applications such as industrial motor drives; solar inverters and digital power; electrical vehicles and transportation; and sensing and signal processing. The dual real-time control subsystems are based on TI's 32-bit C28x floating-point CPUs, which provide 200 MHz of signal processing performance in each core. The C28x CPUs are further boosted by the new TMU accelerator, which enables fast execution of algorithms with trigonometric operations common in transforms and torque loop calculations. The F2837xD microcontroller family features two CLA real-time control coprocessors. The CLA is an independent 32-bit floating-point processor that runs at the same speed as the main CPU. The CLA responds to peripheral triggers and executes code concurrently with the main C28x CPU. This parallel processing capability can effectively double the computational performance of a real-time control system. By using the CLA to service time-critical functions, the main C28x CPU is free to perform other tasks, such as communications and diagnostics. The dual C28x+CLA architecture enables intelligent partitioning between various system tasks. For example, one C28x+CLA core can be used to track speed and position, while the other C28x+CLA core can be used to control torque and current loop. Performance analog and control peripherals are also integrated on the F2837xD MCU to further enable system consolidation. Four independent 16-bit ADCs provide precise and efficient management of multiple analog signals, which ultimately boosts system throughput. The Comparator Subsystem (CMPSS) with windowed comparators allows for protection of power stages when current limit conditions are exceeded or not met. Other analog and control peripherals include DACs, PWMs, eCAPs, eQEPs, SDFMs, and other peripherals.

2.3.3 LMG5200

The LMG5200 device, an 80-V, 10-A driver plus GaN half-bridge power stage provides an integrated power stage solution using enhancement-mode Gallium Nitride (GaN) FETs. The device consists of two GaN FETs driven by one high-frequency GaN FET driver in a half-bridge configuration. GaN FETs provide significant advantages for power conversion as they have near-zero reverse recovery and very-small input capacitance C_{ISS}. The LMG5200 is mounted on a completely bond-wire-free package platform with minimized package parasitic elements. The LMG5200 device is available in a 6- × 8- × 2-mm lead free package and can be easily mounted on PCBs. The LMG5200 reduces the board requirements for maintaining clearance requirements for medium-voltage GaN applications while minimizing the loop inductance to ensure fast switching. The LMG5200 is specified over the extended operating temperature range (–40°C to 125°C)

2.3.4 INA240

The INA240 is a voltage-output, current sense amplifier with enhanced PWM rejection that can sense drops across shunt resistors over a wide common-mode voltage range from –4 to 80 V, independent of the supply voltage. Enhanced PWM rejection provides high levels of suppression for large common-mode transients ($\Delta V/\Delta t$) in systems that use pulse-width modulation (PWM) signals such as three-phase inverters in motor drives. This feature allows for accurate current measurements without large transients and associated recovery ripple on the output voltage. This device operates from a single 2.7- to 5.5-V power supply, drawing a maximum of 2.4-mA of supply current. Four fixed gains are available: 20 V/V, 50 V/V, 100 V/V, and 200 V/V. The low offset of the zero drift architecture enables current sensing with maximum drops across the shunt as low as 10-mV full scale. All versions are specified over the extended operating temperature range (–40°C to 125°C), and are offered in an 8-pin TSSOP package.

Copyright © 2019, Texas Instruments Incorporated

2.4 System Design Theory

2.4.1 FOC and Position Loop in Servo Drives

Figure 3 shows the basic position control block diagram of a field oriented control (FOC) based AC motor drive system used in servo drives. The current loop is highlighted here because this is the inner most loop that has a higher influence on the bandwidth of the outer speed and position loops. For the outer position and speed loops to have a higher bandwidth, the inner loop must have a far higher bandwidth, typically more than three times. In the current loop, any two of the motor phase currents are measured, while the third can be estimated from these two sensing currents. These measurements feed the Clarke transformation module. The outputs of this projection are designated I_α and I_β. These two components of the current along with the rotor flux position are the inputs of the Park transformation, which transform them to currents (I_d and I_q) in D-Q rotating reference frame. The I_d and I_q components are compared to the references $I_d$ref (the flux reference) and $I_q$ref (the torque reference). In the synchronous permanent magnet motor, the rotor flux is fixed as determined by the magnets. When controlling a PMSM motor, $I_d$ref can be set to zero, except during field weakening. The torque command $I_q$ref can be from the output of the speed regulator. The outputs of the current regulators are $V_d$ref and $V_q$ref. These outputs are applied to the inverse Park transformation. Using the position of rotor flux, this projection generates $V_\alpha$ref and $V_\beta$ref, which are the components of the stator vector voltage in the stationary orthogonal reference frame. These components are the inputs of the PWM generation block. The outputs of this block are the signals that drive the inverter. Both Park and inverse Park transformations need the rotor flux position that is obtained from the position encoder in this reference design using sensored-FOC.

Figure 3. Basic Position Control With Sensored-FOC for a PMSM

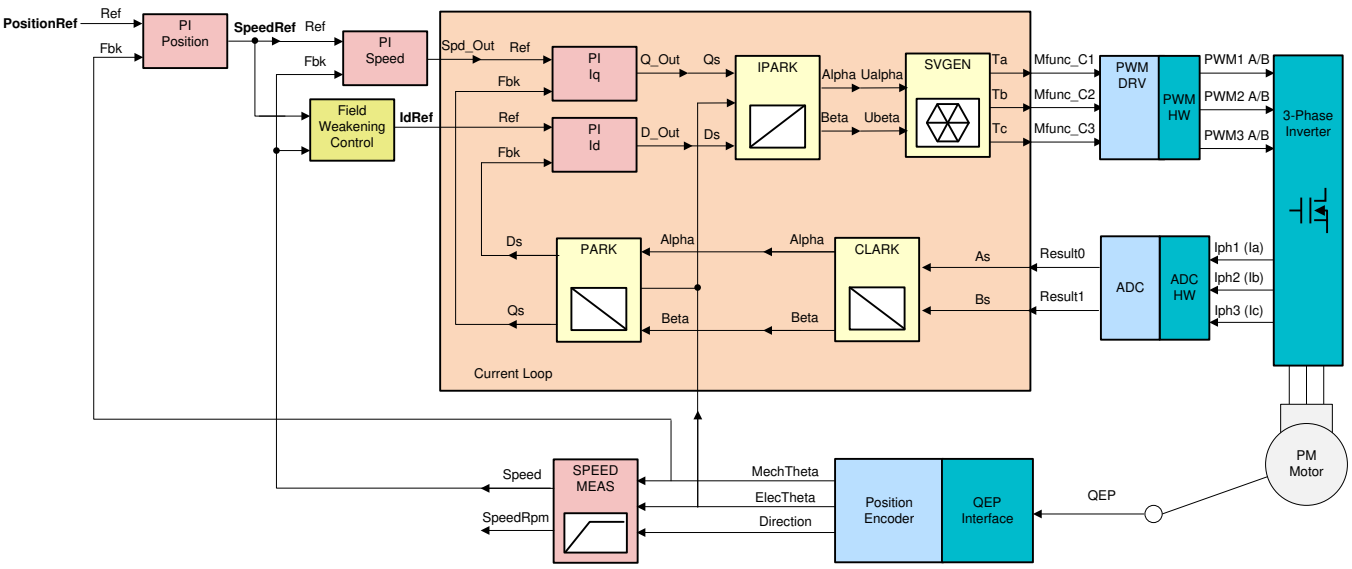

Copyright © 2019, Texas Instruments Incorporated

2.4.2 Fast Current Loop

A minimal current loop time not only helps to improve the control bandwidth, but it also enables a higher modulation index (M-I) for the inverter. A higher M-I translates into the higher phase voltage that the inverter can apply on the motor. Higher loop latency will reduce the maximum available voltage and can restrict the rate of current change in the motor, thereby, adversely impacting the controller performance. To overcome these challenges, a controller with high computational power, right set of control peripherals and superior control algorithm are needed. The TMS320F2837x and TMS20F28004x provide the necessary hardware support for higher performance, and the FCL algorithm from TI that runs on the C2000 MCU provides the needed algorithmic support.

Figure 4 shows the block diagram of FCL algorithm with its inputs and outputs. The FCL partitions its algorithm across the CPU, CLA and TMU to bring down the latency to under 1.0 µs on F2837x compared to the acceptable 2.0 µs. The FCL algorithm supports two types of current regulators, a typical PI controller and a complex controller. The complex controller can provide additional bandwidth over the typical PI controller at higher speeds. Both current regulators are provided for user evaluation. For more information on the FCL algorithm, see the *Dual-Axis Motor Control Using FCL and SFRA On a Single C2000™ MCU Application Report*, and the source codes of FCL algorithm is available from the MotorControl SDK software.

Figure 4. Fast Current Loop Block Diagram

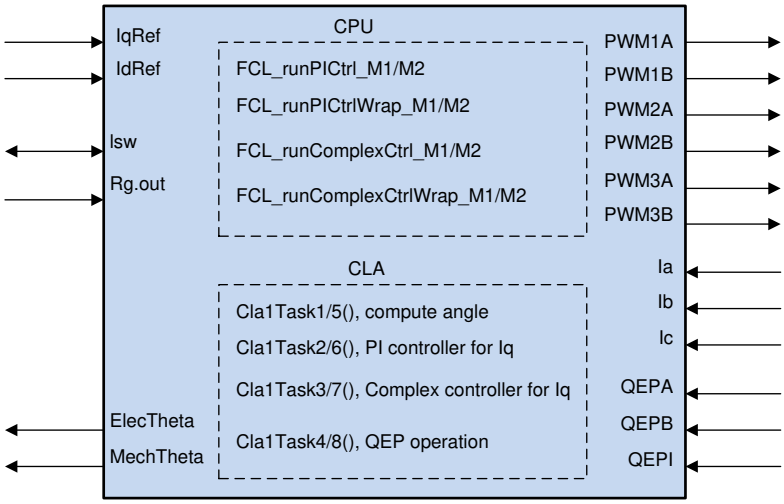

Copyright © 2019, Texas Instruments Incorporated

3 Hardware, Software, Testing Requirements, and Test Results

3.1 Required Hardware and Software

The reference design is based on the existing hardware tools, most of which are available from the TI Store. The details of the evaluation hardware and references to the user's guide are listed below:

- CPU – Either one LAUNCHXL-F28379D or one LAUNCHXLF280049C.
  - LAUNCHXL-F28379D – one unit – LAUNCHXL-F28379D Overview User's Guide
  - LAUNCHXLF280049C – one unit – C2000™ Piccolo™ F28004x Series LaunchPad™ Development Kit.
- Inverter (INV) – BOOSTXL-3PhGaNInv – two units – BOOSTXL-3PhGaNInv Evaluation Module User's Guide.
- Motor Dyno Set – 2MTR-DYNO – one unit (two motors)
- A variable DC power supply rated at 48 V/5 A.

3.1.1 LAUNCHXL-F28379D

Figure 5 shows the layout of LAUNCHXL-F28379D, on-board switches setting as marked. For further details, see the LAUNCHXL-F28379D Overview User's Guide.

Figure 5. Layout of LAUNCHXL-F28379D and Switches Setting

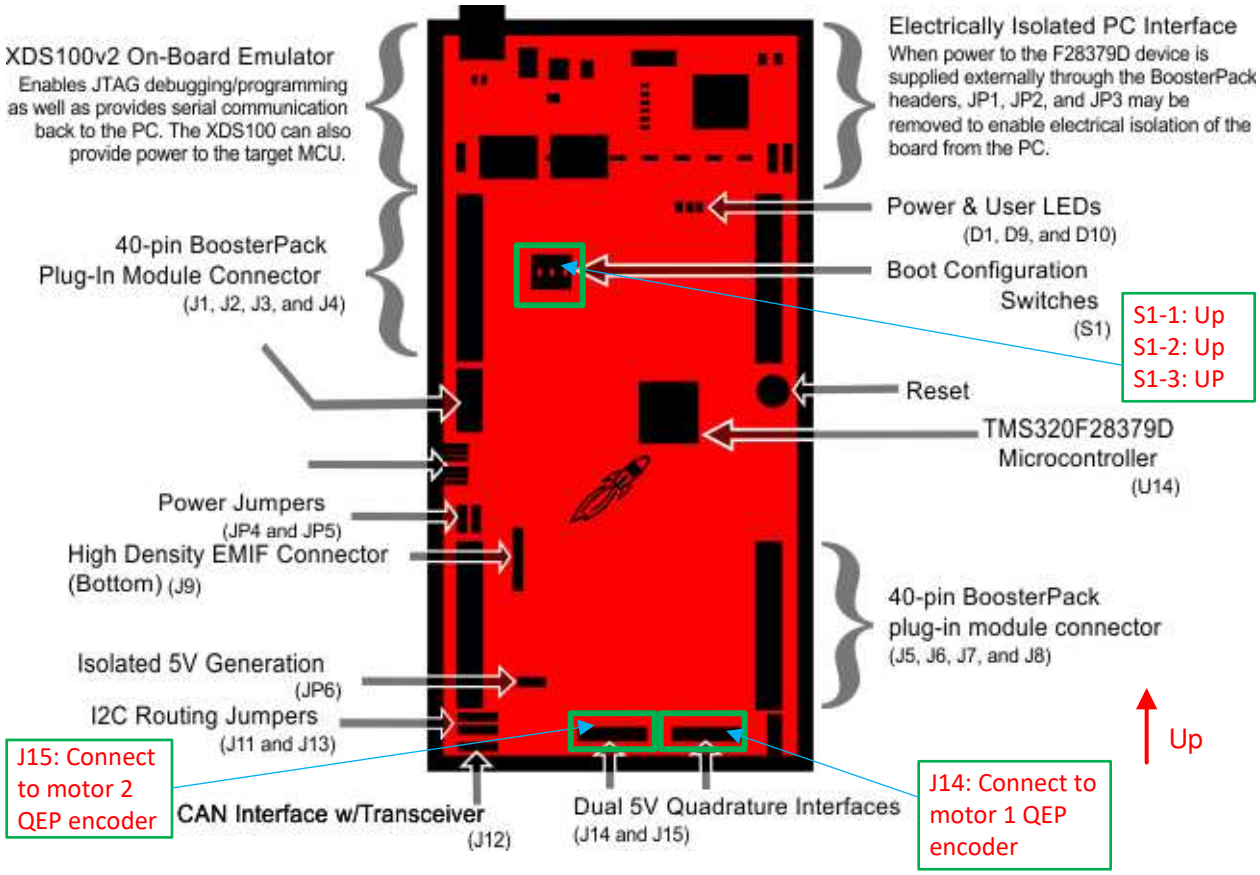

Copyright © 2019, Texas Instruments Incorporated

3.1.2 LAUNCHXL-F280049C

Figure 6 shows the layout of LAUNCHXL-F280049C, on-board switches setting as marked. For further details, see the C2000™ Piccolo™ F28004x Series LaunchPad™ Development Kit.

Figure 6. Layout of LAUNCHXL-F280049C and Switches Setting

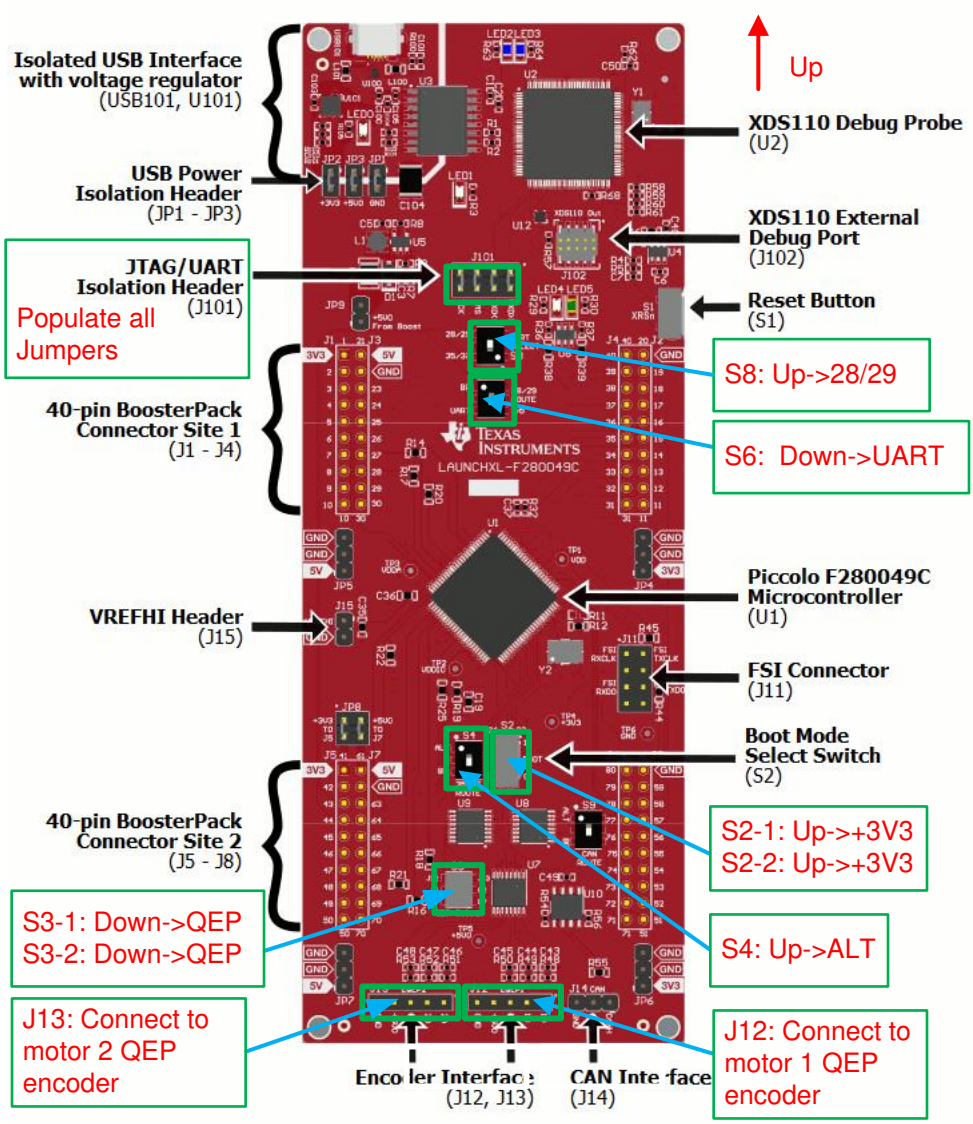

Copyright © 2019, Texas Instruments Incorporated

3.1.3 BOOSTXL-3PhGaNInv

Figure 7 shows the layout of BOOSTXL-3PhGaNInv, on-board switches setting as marked. For more details, see the BOOSTXL-3PhGaNInv Evaluation Module User's Guide.

Figure 7. Layout of BOOSTXL-3PhGaNInv and Switch Setting

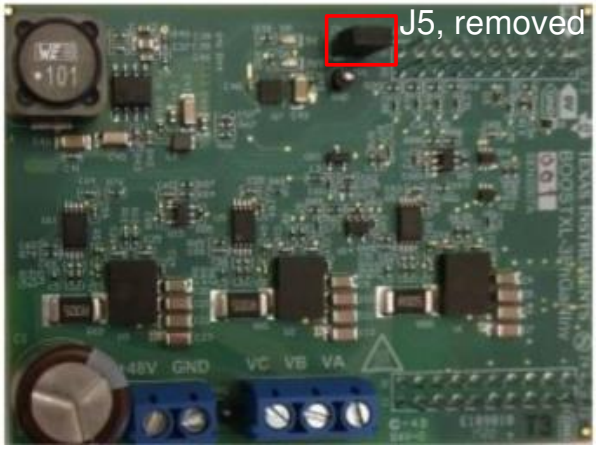

3.1.4 Software

The firmware of this design is available in the C2000Ware MotorControl SDK and the detailed description and operation of the firmware are introduced in the Dual-Axis Motor Control Using FCL and SFRA On a Single C2000™ MCU Application Report. Figure 8 shows the general structure of the project, The firmware of F2837x and F28004x uses the same project structure, and shares most files for motor drive. The software is built such that two different motors can be controlled independently. The firmware of this reference design is gradually built up in order for the final system can be confidently operated. Six phases of the incremental system build are designed to verify the major software modules used in the system. Table 2 and Table 3 summarize the core functions integrated and tested at each build level in the incremental build approach.

Figure 8. Project Structure

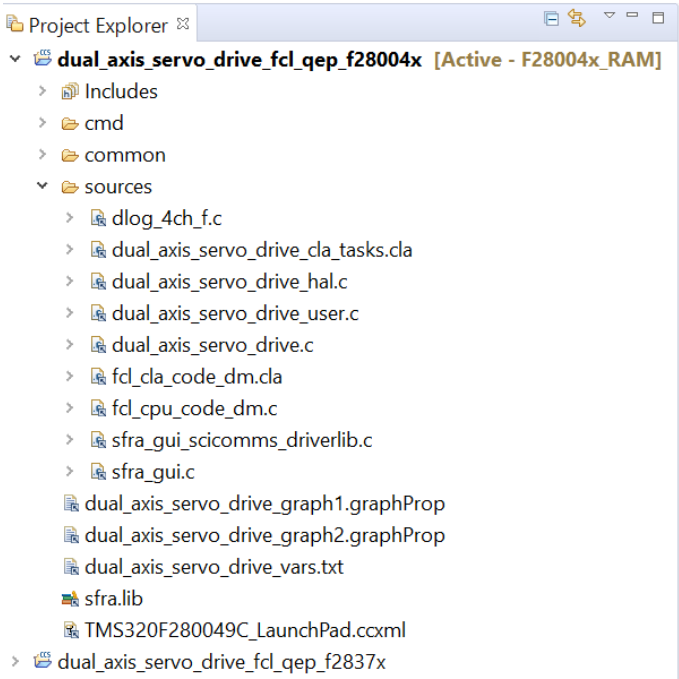

Copyright © 2019, Texas Instruments Incorporated

Table 2. Functions Verified in Each Incremental System Build

BUILD LEVEL	FUNCTIONAL INTEGRATION
Level 1	Basic PWM generation
Level 2	Open loop control of motor and calibration of current sensing feedbacks
Level 3	CURRENT MODE - Closing current loop using FCL algorithm
Level 4	SPEED MODE - Closing speed loop using inner FCL verified in LEVEL 3
Level 5	POSITION MODE - Closing position loop using inner speed loop verified in LEVEL 4
Level 6	SFRA ANALYSIS - Performing SFRA on current loop running motor in speed mode (LEVEL 4)

Table 3. Functional Modules Used in Each Incremental System Build

SOFTWARE MODULE	LEVEL 1	LEVEL 2	LEVEL 3	LEVEL 4	LEVEL 5	LEVEL 6
PWM Generation	√√	√	√	√	√	√
QEP Interface in CLA		√√	√	√	√	√
FOC Functions			√√	√	√	√
FCL			√√	√	√	√
Speed Controller				√√	√	√
Position Controller					√√	
SFRA Functions						√√
Note: the symbol √ means this module is using and the symbol √√ means this module is testing in this Level.						

Copyright © 2019, Texas Instruments Incorporated

3.2 Testing and Results

3.2.1 Test Setup

Before mounting the BoosterPacks, ensure that jumpers on both LaunchPad and dual-BoosterPacks are set correctly as shown in Figure 5 or Figure 6 and Figure 7. The motor is a PMSM motor with both QEP and HALL sensors available on its headers J4 and J10, respectively. The control scheme is based on QEP feedback; therefore, its QEP header J4 is fed into the LaunchPad. The BoosterPack suggested for this evaluation will mount directly on to the LAUNCHXLF28379D or LAUNCHXL-F280049C. This connects the analog/digital IOs of the BoosterPack to the appropriate IOs of the CPU. Make sure to match the orientation of inverter BoosterPacks as shown in Figure 9 before mounting. Mount one inverter BoosterPack on LaunchPad connectors J1-J4, let us call it inverter INV1. Likewise, mount the other inverter on LaunchPad connectors J5–J8, and call it inverter INV2. Until instructed, leave the INV output headers and QEP headers open. When instructed to connect motor 1, connect motor 1 terminal to INV1 connector terminal as Table 4 and motor's QEP header to QEP-A on LaunchPad. Likewise, when instructed, connect motor 2 to INV2 and its QEP header to QEP-B on LaunchPad.

Figure 9. Dual-Axis Motor Drive Assembly With LAUNCHXL-F28379D and BOOSTXL-3PhGaNInv

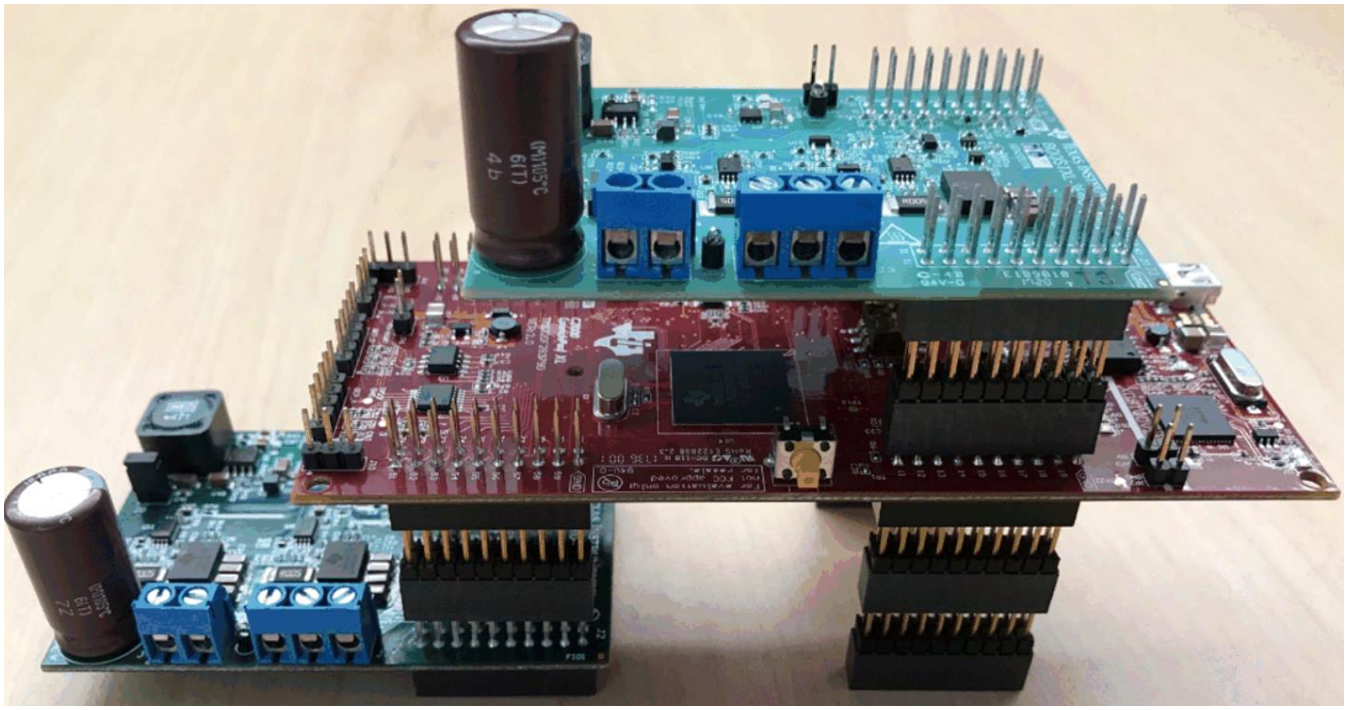

Table 4. Motor Phase Connections to BoosterPack™

BOOSTXL-3PhGaNInv, J3 CONNECTOR		M-2310P-LNK-04 MOTOR	
Pin	Name	Pin	Color
3	VA	Phase R	Black
2	VB	Phase S	Red
1	VC	Phase T	White

Copyright © 2019, Texas Instruments Incorporated

3.2.2 Test Results

The operation and test result at each build level are described in application report Dual-Axis Motor Control Using FCL and SFRA On a Single C2000™ MCU in detail. Figure 10 and Figure 11 show the rotor position, speed and current waveform with controlling dual-axis motor simultaneously. Figure 12 and Figure 13 show the torque current, speed and phase current under 0.6 pu speed by adding or removing a step load.

Figure 10. Rotor Position and Speed of Dual-Axis Motor

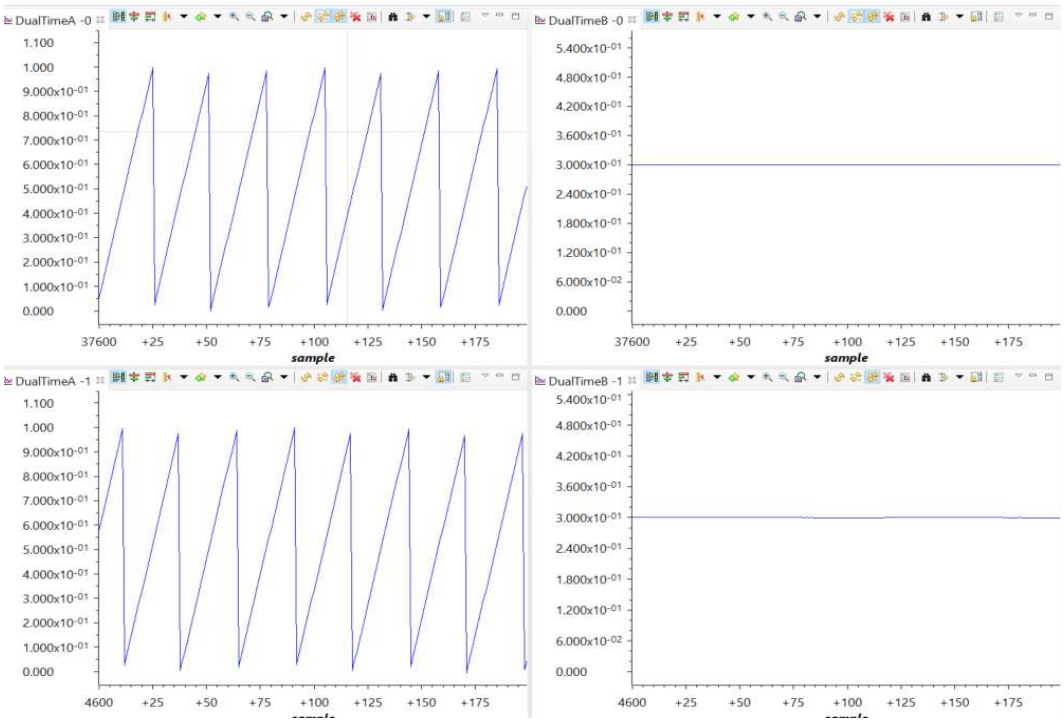

Figure 11. Phase Current of Dual-Axis Motor

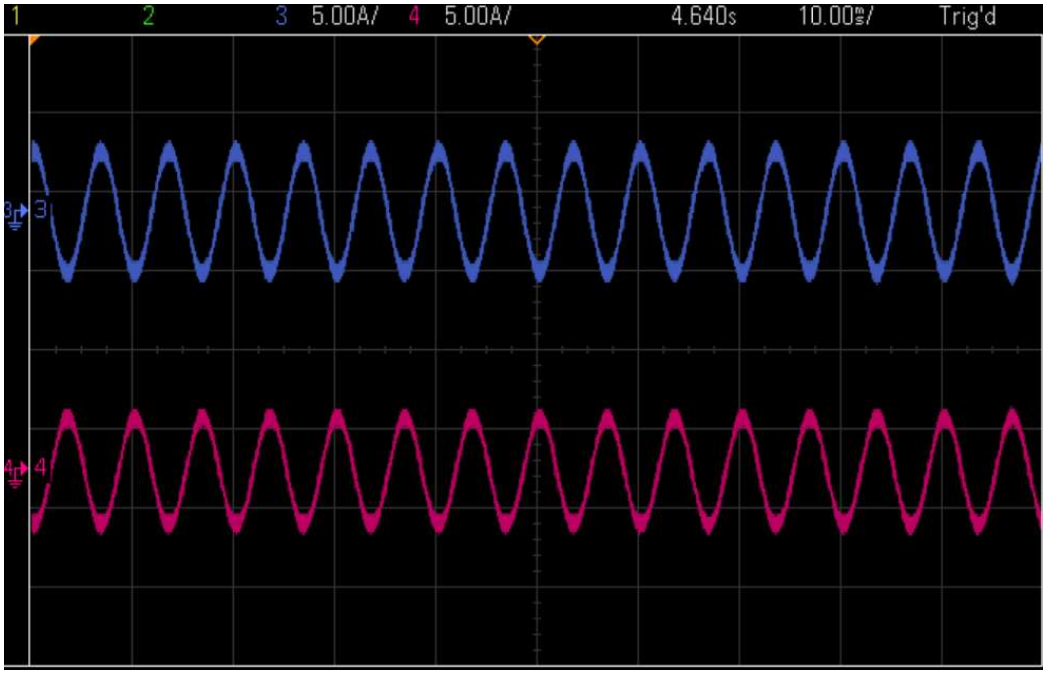

Copyright © 2019, Texas Instruments Incorporated

Figure 12. Speed, Torque Current and Phase Current of One Motor With Adding a Step Load

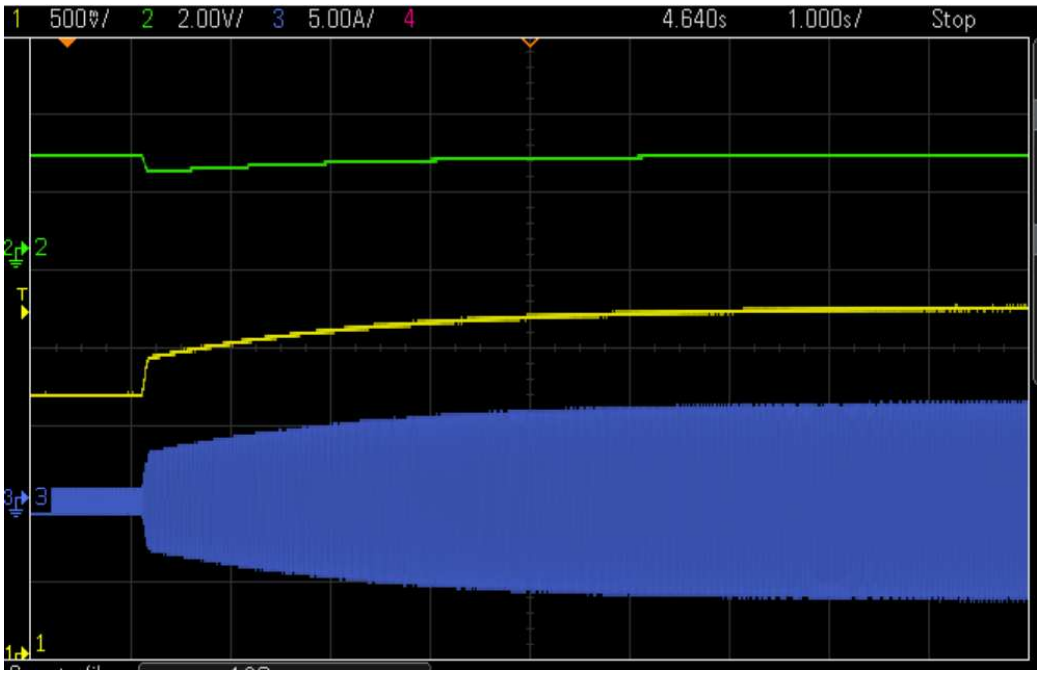

Figure 13. Speed, Torque Current and Phase Current of One Motor With Removing a Step Load

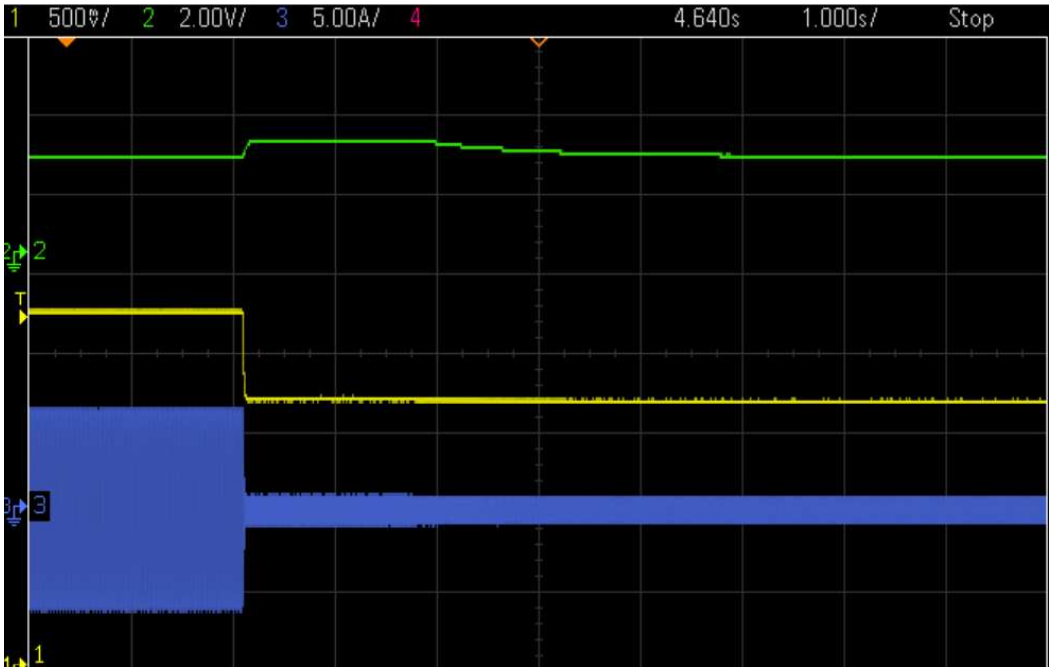

Copyright © 2019, Texas Instruments Incorporated

4 Design Files

This reference design is based on the released C2000 development kits and Evaluation Module, which include LAUNCHXL-F28379D, LAUNCHXL-F280049C, and BOOSTXL-3PHGANINV.

5 Software Files

To download the software files, see the design files at C2000Ware-MOTORCONTROL-SDK.

6 Related Documentation

1. Texas Instruments, *Fast Current Loop Driverlib Library User's Guide*
2. Texas Instruments, *LAUNCHXL-F28379D Overview User's Guide*
3. Texas Instruments, *C2000™ Piccolo™ F28004x Series LaunchPad™ Development Kit*
4. Texas Instruments, *BOOSTXL-3PhGaNInv Evaluation Module User's Guide*
5. Texas Instruments, *C2000™ Software Frequency Response Analyzer (SFRA) Library and Compensation Designer User's Guide*
6. Texas Instruments, *Dual-Axis Motor Control Using FCL and SFRA On a Single C2000™ MCU Application Report*

6.1 Trademarks

C2000, E2E, BoosterPack, LaunchPad, TMS320C2000, Piccolo are trademarks of Texas Instruments. All other trademarks are the property of their respective owners.

7 Terminology

ADC - Analog-to-Digital Converter

CLA - Control Law Accelerator

CMPSS - Comparator Subsystem Peripheral

CNC - Computer Numerical Control

DAC - Digital to Analog Converter

DMC - Digital Motor Control

ePWM - Enhanced Pulse Width Modulator

eQEP - Enhanced Quadrature Encoder Pulse Module

FCL - Fast Current Loop

FOC - Field-Oriented Control

FPGA - Field Programmable Gate Array

MCU - Microcontroller Unit

PMSM - Permanent Magnet Synchronous Motor

PWM - Pulse Width Modulation

SFRA - Software Frequency Response Analyzer

TMU - Trigonometric Mathematical Unit

8 About the Author

YANMING LUO is a Systems Application Engineer in the system solutions team of C2000 at Texas Instruments, where he is responsible for developing reference design solutions for motor drive applications based C2000 controllers. Yanming has been with TI since 2003 and earned an M.S. degree from Northeastern University, China in 1998.

Copyright © 2019, Texas Instruments Incorporated

IMPORTANT NOTICE AND DISCLAIMER

TI PROVIDES TECHNICAL AND RELIABILITY DATA (INCLUDING DATASHEETS), DESIGN RESOURCES (INCLUDING REFERENCE DESIGNS), APPLICATION OR OTHER DESIGN ADVICE, WEB TOOLS, SAFETY INFORMATION, AND OTHER RESOURCES “AS IS” AND WITH ALL FAULTS, AND DISCLAIMS ALL WARRANTIES, EXPRESS AND IMPLIED, INCLUDING WITHOUT LIMITATION ANY IMPLIED WARRANTIES OF MERCHANTABILITY, FITNESS FOR A PARTICULAR PURPOSE OR NON-INFRINGEMENT OF THIRD PARTY INTELLECTUAL PROPERTY RIGHTS.

These resources are intended for skilled developers designing with TI products. You are solely responsible for (1) selecting the appropriate TI products for your application, (2) designing, validating and testing your application, and (3) ensuring your application meets applicable standards, and any other safety, security, or other requirements. These resources are subject to change without notice. TI grants you permission to use these resources only for development of an application that uses the TI products described in the resource. Other reproduction and display of these resources is prohibited. No license is granted to any other TI intellectual property right or to any third party intellectual property right. TI disclaims responsibility for, and you will fully indemnify TI and its representatives against, any claims, damages, costs, losses, and liabilities arising out of your use of these resources.

TI’s products are provided subject to TI’s Terms of Sale (www.ti.com/legal/termsofsale.html) or other applicable terms available either on ti.com or provided in conjunction with such TI products. TI’s provision of these resources does not expand or otherwise alter TI’s applicable warranties or warranty disclaimers for TI products.

Mailing Address: Texas Instruments, Post Office Box 655303, Dallas, Texas 75265
Copyright © 2019, Texas Instruments Incorporated