PU6050 Gyro Sensor Interfacing with ESP32 Board

blished June 22, 2020 2

A Ashish Choudhary (/users/ashish-choudhary) Author

DigiKey

(https://bit.ly/4I1O8vn)

Exper
securi
perfor
Core &

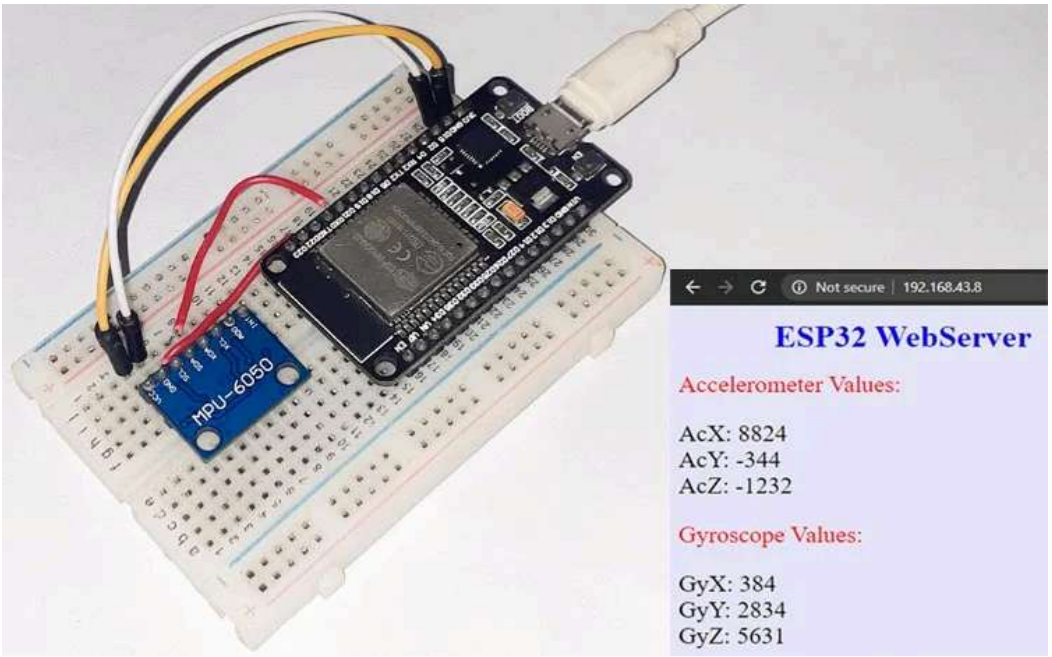

Interfacing MPU6050 Gyro Sensor with ESP32

The MPU6050 sensor module consists of an accelerometer and gyro on a single chip. It contains analog-16 bits in the digital converter for each channel. So it can capture the x, y, and z channels at the same time. The sensor uses I2C-bus to interact with Arduino or any other microcontroller. The MPU-6050 sensor module used in many applications like drones, robots, motion sensors. This sensor is also called the **Gyroscope or Triple axis accelerometer.** We previously used this module to build many MPU6050 based projects. (https://circuitdigest.com/tags/mpu6050)

(https://bit.ly/4aT6PwH)

AIRC
CYW
Conr
(http
)
Redefi
AIROC
for IoT

(https://bit.ly/4rIx0NO)

DCM
Dens
Conv
(http
)
Innova
archit
risk of
systen

(https://bit.ly/40377fz)

090
Cera
Ante
(http
Comp
SMD a
LoRaW
and as

In today's article, we are going to **interface the MPU6050 Accelerometer and Gyroscope with ESP32** and showing the values over the Webserver. Throughout this article, I will give you a basic introduction to the MPU6050 and demonstrate how it can be interfaced with an ESP32 Development Board and how its values can be displayed on the Webpage.

Components Required

- ESP32 NodeMCU
- MPU6050 Accelerometer and Gyroscope Module
- Jumper Wires

Circuit Diagram

Circuit Diagram for **interfacing MPU6050 Accelerometer and Gyroscope Module with ESP32** is given below.

(https://bit.ly/4r6Ngaz)
DG1
Inlet
Brea
(http
SCHU
power
inlet a
break

(https://bit.ly/4aJeoaF)
RNW
Play
(http
Experi
perfor
conne
today.

(https://bit.ly/4IkTO49)
TMF
Opti
Sens
(http
TMF8
for hig
and di

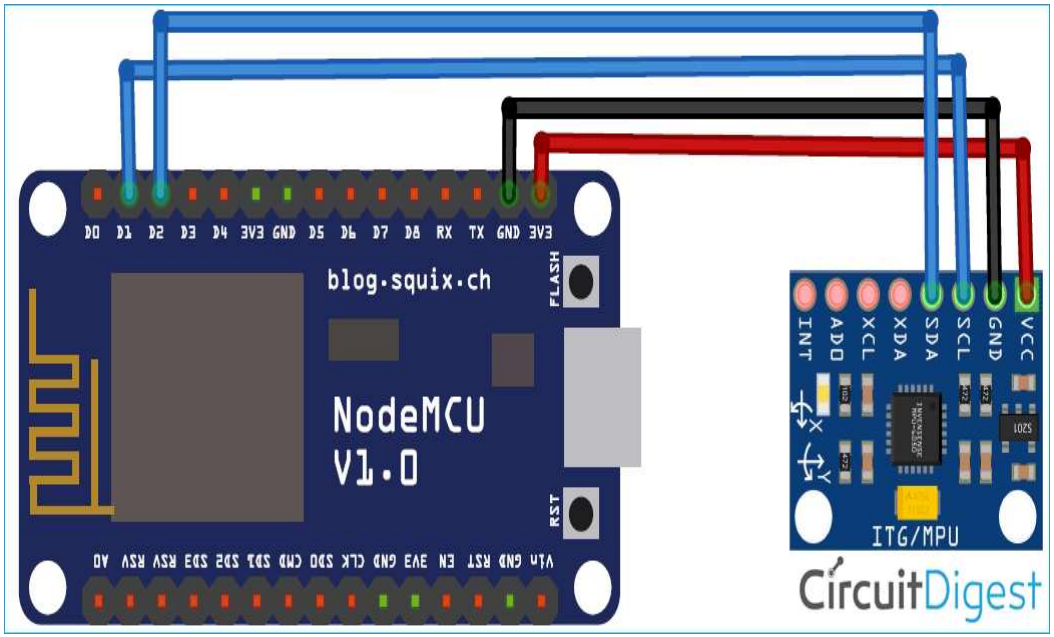

(/fullimage?i=circuitdiagram_mic/MPU6050-Gyro-Sensor-Interfacing-with-ESP32.png)

The MPU6050 communicates with the ESP32 through the I2C protocol, so we only need two wires to interface ESP32 and MPU6050. The SCL and SDA pins of MPU6050 are connected to D22 and D21 pins of ESP32, while VCC and GND pins of MPU6050 are connected to 3.3V and GND of ESP32.

(https://bit.ly/3OE8krj)

SMD
Pote
(http
Nidec
hook c
1 to 1
adjust

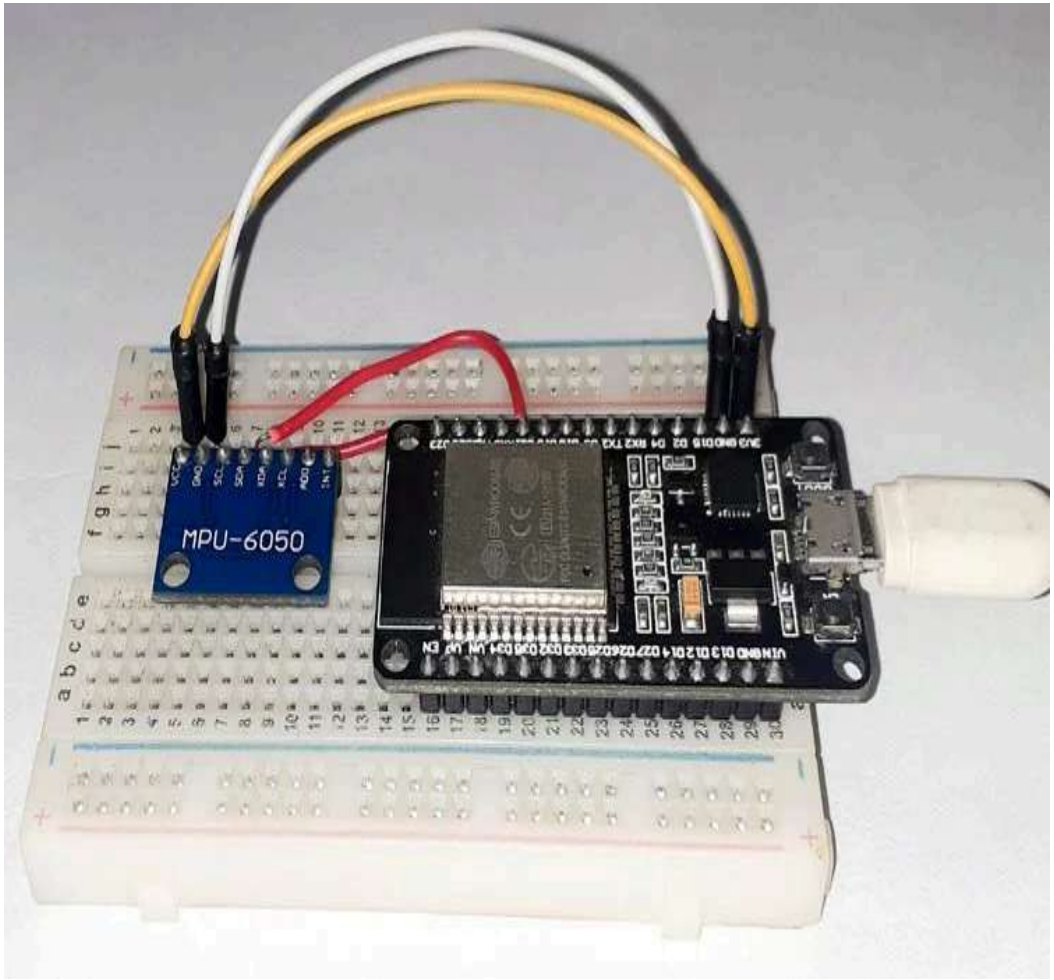
MPU-6050

MPU6050 Sensor Module

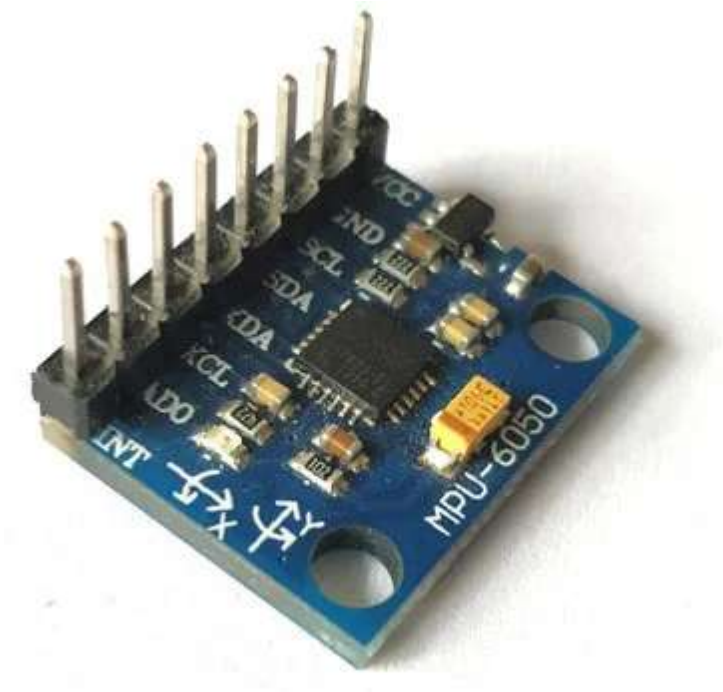

MPU6050 is based on Micro-Mechanical Systems (MEMS) technology. This sensor has a **3-axis accelerometer, a 3-axis gyroscope, and an in-built temperature sensor**. It can be used to measure parameters like Acceleration, Velocity, Orientation, Displacement, etc. We have previously interfaced MPU6050 with Arduino (https://circuitdigest.com/microcontroller-projects/mpu6050-gyro-sensor-interfacing-with-arduino) and Raspberry pi (https://circuitdigest.com/microcontroller-projects/mpu6050-gyro-sensor-interfacing-with-raspberry-pi) and also built a few projects

using it like- Self Balancing robot (https://circuitdigest.com/tags/self-balancing-robot), Arduino Digital Protractor (https://circuitdigest.com/microcontroller-projects/arduino-based-digital-protractor-using-mpu6050-gyroscope), and Arduino Inclinometer (https://circuitdigest.com/microcontroller-projects/arduino-inclinometer-using-mpu6050).

The MPU6050 module is small in size and has low power consumption, high repetition, high shock tolerance, and low user price points. The MPU6050 comes with an I2C bus and Auxiliary I2C bus interface and can easily interfere with other sensors such as magnetometers and microcontrollers.

Code Explanation

The programming part for **MPU6050 ESP32** is simple. The complete code is given at the end of the page. Here we are explaining some important parts.

As usual, start the code by including all the required libraries. The *Wire.h* library allows you to communicate with I2C / TWI devices while *WiFi.h* library provides ESP32 specific Wi-Fi routines that we are calling to connect to the network.

```
#include <Wire.h>
#include <WiFi.h>
```

After including the libraries, define some variables to store the Accelerometer and Gyroscope values.

```
int16_t AcX,AcY,AcZ,Tmp,GyX,GyY,GyZ;
```

In the next lines, enter your Wi-Fi Name and password.

```
const char *ssid =  "Galaxy-M20";     // Enter your Wi-Fi Nam
const char *pass =  "ac312124"; // Enter your Wi-Fi Password
```

Inside the *void setup()* loop, initialize the baud rate, the wire library, Webserver, and the data transmission through the power management register.

```
Serial.begin(115200);
Wire.begin();
Wire.beginTransmission(MPU_addr);
Wire.write(0x6B);
Wire.write(0);
server.begin();
```

In *loop* Function, we have called the *mpu_read* function to get the accelerometer and gyroscope readings. These readings will be sent to the Webpage using the *client.println()* function.

```
mpu_read();
```

Now in the next lines, check whether any client has sent an HTTP request or not. If ESP32 gets any client request, then it will be stored in character and shown on the serial monitor.

```
WiFiClient client = server.available();
 if (client)
  {
    Serial.println("new client");
    String currentLine = "";
    while (client.connected())
    {
      if (client.available())
      {
        char c = client.read();
        if (c == '\n')
```

Next, design the web page using html and send each line to the Webpage using the *client.println()* function. The *<style>* tag is used to change the text and background color. You can change the properties in the below lines.

```
client.print("<html><title> ESP32 WebServer</title></html>");
client.print("<body bgcolor=\"#E6E6FA\"><h1 style=\"text-alig
client.print("<p style=\"text-align: left; color: red; font-s
 client.print("<p style=\"text-align: left; font-size:150% \"
 client.print(AcX);
 client.print("<br/>AcY: ");
 client.print(AcY);
 client.print("<br/>AcZ: ");
 client.print(AcZ);
 client.print("<p style=\"text-align: left; color: red; font-
 client.print("<p style=\"text-align: left; font-size:150% \"
 client.print(GyX);
 client.print("<br/>GyY: ");
 client.print(GyY);
 client.print("<br/>GyZ: ");
 client.print(GyZ);
 client.print("</p></body>");
```

Inside the *mpu_read* loop(), read all the six registers for the X, Y, and Z axes of Accelerometer and Gyroscope.

```
AcX=Wire.read()<<8|Wire.read();  // 0x3B (ACCEL_XOUT_H) & 0x3
AcZ=Wire.read()<<8|Wire.read();  // 0x3F (ACCEL_ZOUT_H) & 0x4
GyX=Wire.read()<<8|Wire.read();  // 0x43 (GYRO_XOUT_H) & 0x44
GyY=Wire.read()<<8|Wire.read();  // 0x45 (GYRO_YOUT_H) & 0x46
GyZ=Wire.read()<<8|Wire.read();  // 0x47 (GYRO_ZOUT_H) & 0x48
```

Testing the MPU6050 ESP32

Connect the ESP32 with the laptop and upload the code. Don't forget to select the board and port correctly.

Make sure your laptop shares the same Wi-Fi network as the ESP32. After uploading the code, open the serial monitor. Change the baud rate of the serial monitor to 115200. You will see the IP address and the Accelerometer and Gyroscope values on the serial monitor, copy this IP and paste it in the browser. Now you will see the MPU6050 Gyro and accelerometer values on the webpage as shown below:

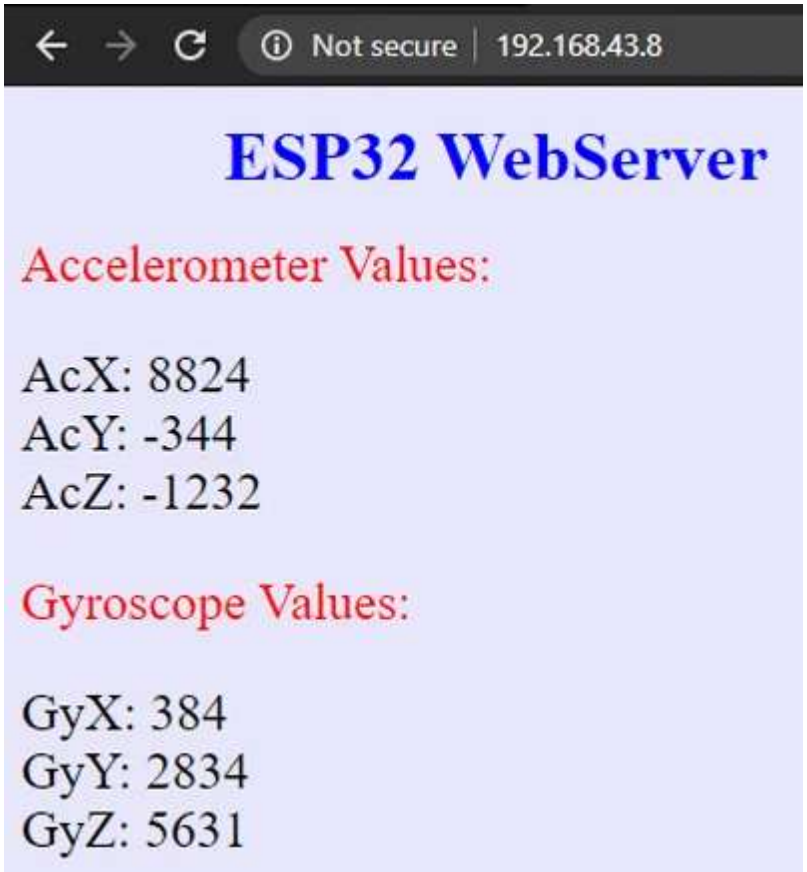

Now you can use these values to build anything cool like a self-balancing robot (https://circuitdigest.com/microcontroller-projects/arduino-based-self-balancing-robot), Hand Gesture Controlled Robotic Arm (https://circuitdigest.com/microcontroller-projects/diy-hand-gesture-controlled-robotic-arm-using-arduino-nano), etc.

Complete Project Code

Copy Code

```
          }
         }
       }
    }
  }
void mpu_read(){
 Wire.beginTransmission(MPU_addr);
 Wire.write(0x3B);  // starting with register 0x3B (ACCEL_X(
 Wire.endTransmission(false);
 Wire.requestFrom(MPU_addr,14,true);  // request a total of
 AcX=Wire.read()<<8|Wire.read();  // 0x3B (ACCEL_XOUT_H) & (
 AcY=Wire.read()<<8|Wire.read();  // 0x3D (ACCEL_YOUT_H) & (
 AcZ=Wire.read()<<8|Wire.read();  // 0x3F (ACCEL_ZOUT_H) & (
 //Tmp=Wire.read()<<8|Wire.read();  // 0x41 (TEMP_OUT_H) & (
 GyX=Wire.read()<<8|Wire.read();  // 0x43 (GYRO_XOUT_H) & 0:
 GyY=Wire.read()<<8|Wire.read();  // 0x45 (GYRO_YOUT_H) & 0:
 GyZ=Wire.read()<<8|Wire.read();  // 0x47 (GYRO_ZOUT_H) & 0:
 Serial.print("Accelerometer Values: \n");
 Serial.print("AcX: "); Serial.print(AcX); Serial.print("\n/
 //Serial.print("\nTemperature: " );  Serial.print(Tmp);
 Serial.print("\nGyroscope Values: \n");
 Serial.print("GyX: "); Serial.print(GyX); Serial.print("\n(
 Serial.print("\n");
 delay(3000);
 }
```

Video

Tags

MPU6050 (/Tags/Mpu6050) Gyroscope (/Tags/Gyroscope)

Accelerometer (/Tags/Accelerometer) ESP32 (/Tags/Esp32)

IoT (/Tags/Iot) Webserver (/Tags/Webserver)

Have any question related to this Article?

Start a Discussion on:

WHATSAPP

(Https://Chat.Whatsapp.Com/L79JMpehN63KCiBPNRwske)

TELEGRAM

(Https://T.Me/Circuitdigest)

DISCORD

(Https://Discord.Com/Invite/UXJrFJSWpz)

FORUM

(Https://Circuitdigest.Com/Forums)

Comments

Commented by eranzenbach (/users/eranzenbach) on Jul 26, 2020 | Permalink

I was porting a project from the Mega 2650 to the ESP32 and the MPU stopped being functional. Unlike you, I have a endWireTransmission() module that calls Wire.endTransmission and looks at the results

returned and reports any NACK or other errors. It kept telling me that I get a NACK when transmitting address and data requests. It took me a while to figure out why your routine works and mine failed. It has to do with bus timing.

I had always started Wire.begin() via:

```
 #if I2CDEV_IMPLEMENTATION == I2C_ARDUINO_WIRE
  Wire.begin();
  Wire.setClock(400000);
 #elif I2CDEV_IMPLEMENTATION == I2CDEV_BUILTIN_FASTWIRE
  Fastwire::setup(400, true);
 #endif
```

Apparently, Wire.setClock is setting the bus speed inappropiately. I suspect it's too low, given how fast the ESP32 is. I commented out the setClock call (in fact the whole macro), and all is well.

Just thought I'd pass that along. -ear

Commented by Martian (/users/blackabyss2709) on Dec 22, 2022 | Permalink

Hi , I had read the complete article and check my code so many times but there is no error or syntax problem but still I am getting -1 reading for my accelerometer and gyroscope all the axis and 0 for temperature , even I had tried to change the temperature , but it's still not working .

And I am using ESP8266 nodemcu and with that I had used ESP8266WiFi.h library. I had also check my circuit connections .

And can you suggest me one more thing how to tightly attach nodemcu with breadboard like it is easily getting out ?

So can you suggest me what could be the problem ?

Thank you!

Add New Comment

Comment *

Login to Comment(/user/login?destination=/microcontroller-projects/mpu6050-gyro-sensor-interfacing-with-esp32-nodemcu-board)

Sign in with Google(https://circuitdigest.com/user/login/google)

Log in with Facebook(https://circuitdigest.com/user/login/facebook)

Sign in with GitHub(https://circuitdigest.com/user/login/github)

Log in (/user/login?destination=/microcontroller-projects/mpu6050-gyro-sensor-interfacing-with-esp32-nodemcu-board%23comment-form) or register (/user/register?destination=/microcontroller-projects/mpu6050-gyro-sensor-interfacing-with-esp32-nodemcu-board%23comment-form) to post comments

Join 100K+ Subscribers

Your email is safe with us, we don't spam.

Type your email address

Subscribe

Be a part of our ever growing community.

Semicon Media is a unique collection of online media, focused purely on the Electronics Community across the globe. With a perfectly blended team of Engineers and Journalists, we demystify electronics and its related technologies by providing high value content to our readers.

(https://www.facebook.com/circuitdigest/) (https://twitter.com/CircuitDigest) (https://www.youtube.com/channel/UCy3CUAIYgZdAOG9k3IPdLmw) (https://www.linkedin.com/company/circuit-digest/)

COMPANY

Privacy Policy (/privacy-policy) Cookie Policy (/cookie-policy) Terms of Use (/terms-of-use) Contact Us (/contact) Advertise (/advertise)

PROJECT

555 Timer Circuits (/555-timer-circuits) Op-amp Circuits (/op-amp-circuits) Audio Circuits (/audio-circuits) Power Supply Circuits (/smps-power-supply-circuits) Arduino Projects (/arduino-projects) Raspberry Pi Projects (/simple-raspberry-pi-projects-for-beginners) MSP430 Projects (/msp430-

projects) STM32 Projects (/stm32-projects-and-tutorials) ESP8266 Projects (/esp8266-projects) PIC Projects (/pic-microcontroller-projects) AVR Projects (/avr-microcontroller-projects) 8051 Projects (/8051-microcontroller-projects) ESP32 Projects (/esp32-projects) IoT Projects (/internet-of-things-iot-projects) PCB Projects (/diy-pcb-projects) Arduino ESP8266 Projects (/arduino-esp8266-projects) All Microcontroller Projects (/microcontroller-projects)

OUR NETWORK

(https://circuitdigest.com) (https://components101.com) (https://iotdesignpro.com)

Copyright © 2023 Circuit Digest (/). All rights reserved.