Ref. No. 3825
092004

ONKYO SERVICE MANUAL

AV RECEIVER
MODEL TX-SR602/E/8260

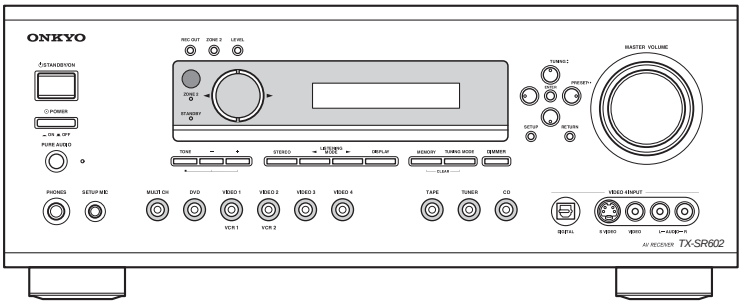

Black, Golden and Silver models

BMDD,BMDC,SMDC	120V AC, 60Hz
BMPP,SMPP,BMPA,SMPA,GMPT	230-240V AC, 50Hz
BMWT,GMWT	120/220-230V AC, 50/60Hz
GMGK,GMGQ,GMGR	220-230V AC, 50Hz

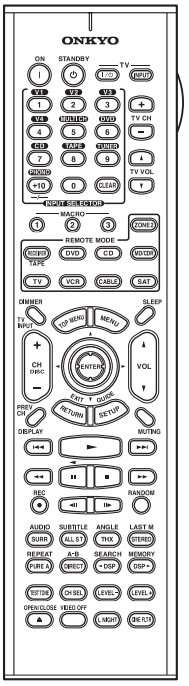

RC-590M or RC-591M

SAFETY-RELATED COMPONENT WARNING!!

THE MARK ⚠ FOUND ON SOME COMPONENT PARTS INDICATES THE CRITICAL FOR RISK OF FIRE AND ELECTRIC SHOCK.
WHEN REPLACING, BE SURE TO USE PARTS OF IDENTICAL DESIGNATION.
MAKE LEAKAGE-CURRENT OR RESISTANCE MEASUREMENTS TO DETERMINE THAT EXPOSED PARTS ARE ACCEPTABLY INSULATED FROM THE SUPPLY CIRCUIT BEFORE RETURNING THE APPLIANCE TO THE CUSTOMER.

ONKYO®
IMAGINATIVE SIGHT & SOUND

Basic check out on receive you work on before submit PCB Auth Request.
Please give us Voltage info on each DSP ICs and where you lost audio signal ?

CONFIDENTIAL

ONKYO

18 Park Way, Upper Saddle River, NJ 07458

Technical Tip

Date: May 25, 2006

Model: HTR-330/530, TX-SR303/SR503 HTR520,TXSR502..

Subject: General troubleshooting for Protect problem.

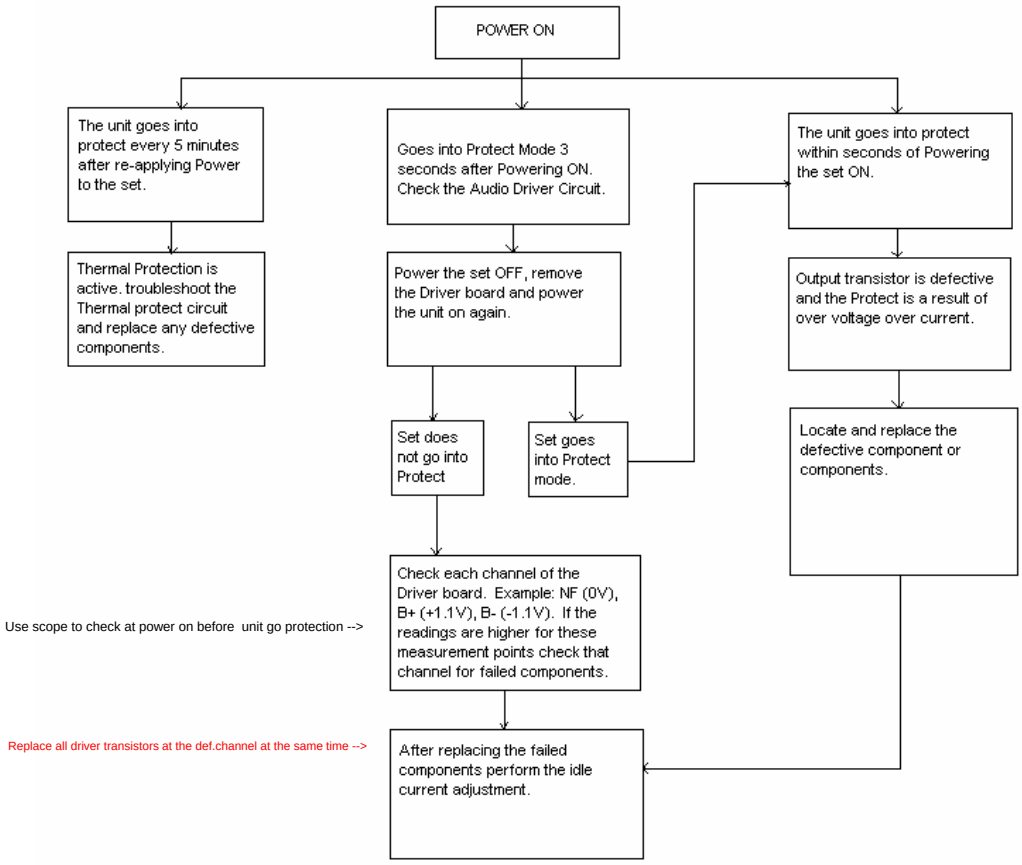

CONFIDENTIALITY NOTICE:

This document and the information it contains is intended for the exclusive use of Authorized ONKYO Service Centers and their employees. This document may contain information that is privileged, confidential and exempt from disclosure under applicable law and terms of the ONKYO Service Agreement. Any dissemination, distribution or copying of this document and the information it contains is strictly prohibited.

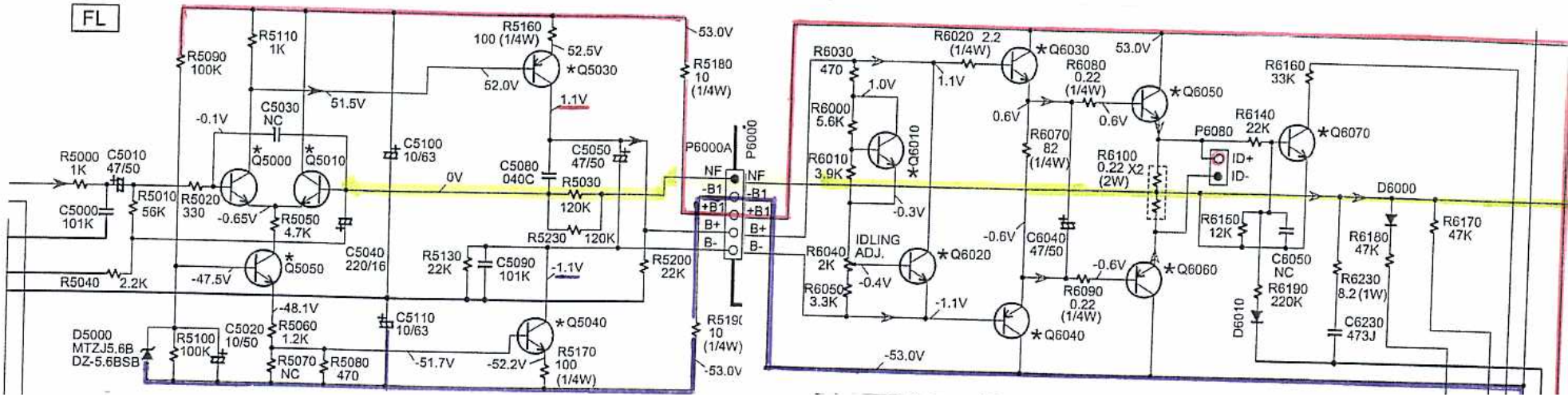

HTR520,TXSR502..

Dsp board no audio signal output

1 . Normal audio using analog inputs. Do you have all Dolby surround sound ?

2 . All DSP voltages are normal ? Did all supply voltage go to all ICs ?+5vDSP, 2.5V,+3.3V...
+7v,-7V..
3 .Input sel IC. Use CD analog input audio signal (ADRT+,ADRT- and ADLT+,ADLT-) out to DAC IC ?
Surround analog signal out (DAC L,DAC R,DAC C,DAC SW,DAC LS, DAC RS ,DAC SB* back to Input sel.IC.
Pin 1 to pin8 out to p5504. (Same as pre out) check Mutting transistors Q5600
to Q5617 .
4 . When use digital input signal did digital light up on display ?
If missing 3.3v,2.5v 5vdsp (on Reg IC Q5640) to DSP ICs will disable DSP function. (U05 Amplifer PC board)

Please use TX-SR502 as sample Technical Tip Troubleshooting.

When you need Tech help Please use Tech Email and give us Voltage and signal info. What voltage on DSP ICs and whereyou lost audio signal ? What you have on input IC Data line
Check with TX-SR502 Troubleshooting tips for the Microprocessor and Audio Select IC

Pop noise in speakers Check next page info you have DC in audio line at any channel .

ONKYO
ONKYO USA CORPORATION
200 Williams Drive • Ramsey NJ 07446
201-825-7950 Fax 201-825-8150

Date: 04/13/03	
Ref #: TXDS575MUTE	
Title: **TX-DS575**	***Classification:*** Service Tip

Symptom: Receiver shuts down when source, Speakers are selected or volume is set to MIN. position.

Solution: **Defective components**

Referring to Page 41 and 42 of service manual find all location of muting transistors used. Anyone of the following transistors at location Q3383, 3483, 3186, 3187, 3188, 3684, 3683, 3583, 3283, 3183 may be leaky. In the exception of Q3187 and Q3188, the emitter voltage of the above-described components should not exhibit any DC volt presence in excess of 12mv to max 20mv while operating.

Mute duration is governed by C3194. Muting control DC volt (+2.6) passes through Q3185. The base of all muting transistors is -12vdc when unit is operating normal. When in mute mode, muting transistors base voltage goes to approximate +2.6vdc.

Q3184 pins 1,2,3,4,8,9,10,11 are expected to be DC free. If Any DC is noticed, Q3184 may be defective.

Troubleshooting Steps and Procedure:

Since the unit is likely to shut down if any one of the function switches or volume controls reach MIN, do the followings to keep the unit ON.

1) On the power amplifier PCB locate P601A. Then Short all the connector pins together.
2) Locate Front amplifier input connector P520A. Short all the connector pins together EXCEPT FIRST PIN, which is 24vdc carrier. This condition will allow the unit to stay ON allowing troubleshooting without unit shutting down.

** Do not forget to remove or clean short when service is complete.

CONFIDENTIAL

ONKYO

18 Park Way, Upper Saddle River, NJ 07458

Service Bulletin

No. 004

Date: August 24, 2005

Model: TX-SR602/702/DTR-4.5/5.5/6.5

Subject: No sound in Surround mode

Symptom: No sound in Surround mode. Coil L921 which is located on the DSP board may have opened due to in rush current.

Solution: Check coil L921, if open, replace L921 with the improved part (green print).

Parts:

Ref #	FORMER		NEW	
	Description	Part Number	Description	Part Number
L921	NCH-1587-022	233533K022R2	NCH-1471	231237M022R2

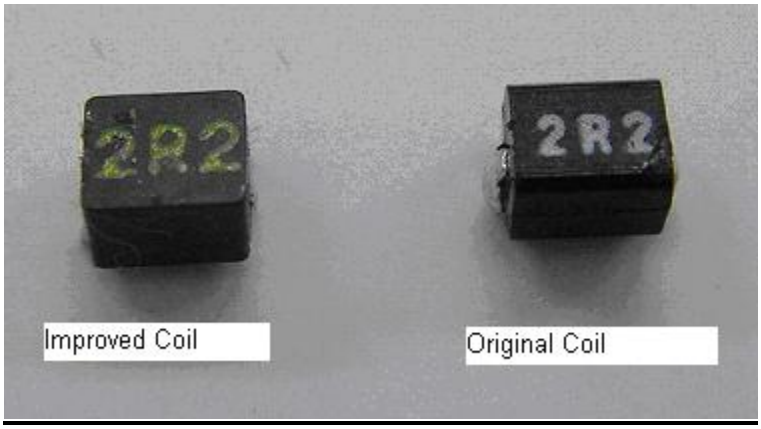

CONFIDENTIALITY NOTICE:
This document and the information it contains is intended for the exclusive use of Authorized ONKYO Service Centers and their employees. This document may contain information that is privileged, confidential and exempt from disclosure under applicable law and terms of the ONKYO Service Agreement. Any dissemination, distribution or copying of this document and the information it contains is strictly prohibited.

CONFIDENTIAL

ONKYO

18 Park Way, Upper Saddle River, NJ 07458

Technical Tip

Date: January 3, 2006

Model: TX-SR602/SR702 can be use other Receive

Subject: Unit Displays “Auto Speaker Setup” and locks up.

Symptom: The unit displays “Auto Speaker Setup and locks up. There is no sound and you cannot exit the Menu Screen.

Solution: No +7V to Front panel, +7 volt regulator Q303 found to be overheating and +7V on pin 19 of the Selector IC Q302 was shorted. Replaced regulator IC Q303 and Selector IC Q302 and normal operation was restored. Tip submitted by R. Jackson of Goodman TV, Addison, TX.
Check all voltage on Amp. power board and DSP board. Repair low voltage you fix the problem.

Parts:

Ref#	Description	Part Number
Q302	NJW1157B	22242193R3
Q303	78L07	222780073R2

CONFIDENTIALITY NOTICE:
This document and the information it contains is intended for the exclusive use of Authorized ONKYO Service Centers and their employees. This document may contain information that is privileged, confidential and exempt from disclosure under applicable law and terms of the ONKYO Service Agreement. Any dissemination, distribution or copying of this document and the information it contains is strictly prohibited.

ONKYO : TXSR602 * - Serial Numbers within range (Last 7 digits) ???0020001 thru ???0029999 with Q701 IC description being M30627FHPGP
Serial Numbers within range (Last 7 digits) ???1020001 thru ???1029999 with Q701 IC description being M30627FHPGP

ONKYO : TXSR702 * - Serial Numbers within range (Last 7 digits) ???0020000 thru ???0028751 with Q701 IC description being M30627FHPGP
*** NOTE : Units with Q701 description of M30627MHP are not upgradeable and the IC needs to be replaced.**

Symptom & Relative model:
1) Any CD/HDCD hybrids which are played into these models digitally,
no audio is output.

Solution:
Perform firmware up-grade procedure below with the latest version posted under "Upgrade" section
on service web site.

Ref. No. 3825
092004

ONKYO SERVICE MANUAL

AV RECEIVER
MODEL TX-SR602/E/8260

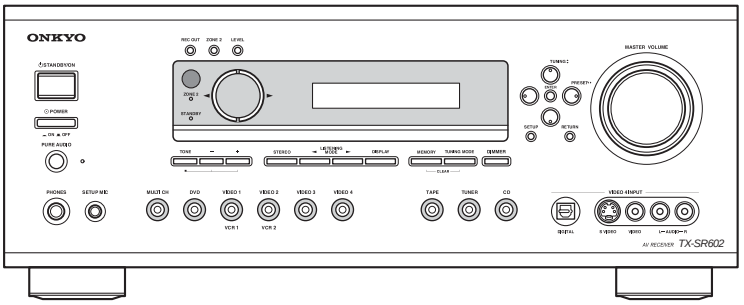

Black, Golden and Silver models

BMDD,BMDC,SMDC	120V AC, 60Hz
BMPP,SMPP,BMPA,SMPA,GMPT	230-240V AC, 50Hz
BMWT,GMWT	120/220-230V AC, 50/60Hz
GMGK,GMGQ,GMGR	220-230V AC, 50Hz

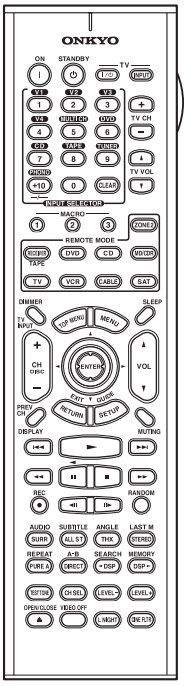

RC-590M or RC-591M

SAFETY-RELATED COMPONENT WARNING!!

THE MARK ⚠ FOUND ON SOME COMPONENT PARTS INDICATES THE CRITICAL FOR RISK OF FIRE AND ELECTRIC SHOCK.
WHEN REPLACING, BE SURE TO USE PARTS OF IDENTICAL DESIGNATION.
MAKE LEAKAGE-CURRENT OR RESISTANCE MEASUREMENTS TO DETERMINE THAT EXPOSED PARTS ARE ACCEPTABLY INSULATED FROM THE SUPPLY CIRCUIT BEFORE RETURNING THE APPLIANCE TO THE CUSTOMER.

ONKYO®
IMAGINATIVE SIGHT & SOUND

SPECIFICATIONS

Amplifier Section

Power Output 2 channel driven:	American **85 W + 85 W (8 ohm ,20Hz~ 20kHz,FTC)** European: 120W + 120 W (6 ohm ,1kHz,DIN) Asian: 150 W + 150 W (6 ohm ,1kHz,JEITA)
Dynamic Power	220 W + 220 W (3 ohm,Front) 165 W + 165 W (4 ohm,Front) 100 W + 100 W (8 ohm,Front)
THD (Total Harmonic Distortion)	0.08 % (Power Rated)
Damping Factor	60 (Front,1kHz,8 ohm)
Input Sensitivity and Impedance	200 mV/ 47 kohm (LINE)
Output Level and Impeadance	200 mV/ 470 ohm (REC OUT)
Frequency Response	10 Hz~100 kHz/ +1 dB-3 dB (Direct mode)
Tone Control	±10 dB, 50 Hz (BASS) ±10 dB, 10 kHz (TREBLE)
SN Ratio	106 dB (LINEIHF-A)
Speaker Impedance	American : 6 ohm~ other :4 ohm~

Video Section

Input Sensitivity/Output Level and Impedance	1 Vp-p /75 ohm (Component and S-Video Y) 0.7 Vp-p /75 ohm (Component Pb/Cb,Pr/Cr) 0.28 Vp-p /75 ohm (S-Video C) 1 Vp-p /75 ohm (Composite)
Component Video Frequency Response	5 Hz ~ 50 MHz

Tuner Section

■ FM

Tuning Frequency Range	American: 87.5 MHz~107.9 MHz Others : 87.5 MHz~108.0 MHz
Usable Sensitivity	Stereo; 17.2 dBf 2 µV(75 ohm IHF) Mono; 11.2 dBf 1 µV(75 ohm IHF)
S/N Ratio	Stereo; 70 dB (IHF-A) Mono; 76 dB (IHF-A)
THD	Stereo; 0.3 % (1kHz) Mono 0.2 % (1kHz)
Frequency Response	30 Hz~15 kHz / ±1 dB
Stereo Separation	45 dB (1kHz)

■ AM

Tuning Frequency Range	American: 530 kHz~1700 kHz Others: 522 kHz~1611 kHz
Usable Sensitivity	30 µV
S/N Ratio	40 dB
THD	0.70%

General

Power Supply	American: AC 120 V, 60 Hz Australian and European: AC 230-240 V, 50 Hz Others : AC 120/220-230 V, 50/60 Hz AC 230-240 V, 50Hz AC 220-230 V, 50/60 Hz
Power Comsumption	American : 8.1A Others : 700 W
Standby Power Comsumption	1.0 W
Dimensions(W x H x D)	435 W x 175 H x 430 D mm 17-1/8" W x 6-7/8" H x 16-15/16" D inches
Weight	American, Australian, European, Singapore and East southern asian: 13.6 kg 30.0 lbs Others: 14.8 kg 32.6 lbs

■ Video Inputs

Component Video Input	1,2,3
S-Video Compatible Jack Input	DVD,VIDEO1,VIDEO2,VIDEO3, VIDEO4
A/V Input	DVD,VIDEO1,VIDEO2,VIDEO3, VIDEO4

■ Video Outputs

Component Video Output	OUT
S-Video Compatible Jack Output	MONITOR OUT,VIDEO1,VIDEO2
A/V Output	MONITOR OUT,VIDEO1,VIDEO2

■ Audio Inputs

Digital Inputs	Optical : 4(American) 3(Others) Coaxial : 2
Analog Inputs	DVD(MULTICHANNEL),VIDEO1,VIDEO2,VIDEO3,VIDEO4,TAPE,CD
Multichannel Inputs	6

■ Audio Outputs

Digital Outputs	Optical : 1
Analog Outputs	TAPE,VIDEO1,VIDEO2
Subwoofer Pre Outputs	1
Speaker Outputs	9
Phones	1

■ Other Jacks

IR Input	1
12V Trigger Out	1

Specifications and features are subject to change without notice.

SERVICE PROCEDURES

1. Replacing the fuses

This symbol located near the fuses indicates that the fuse used is fast operating type. For continued protection against fire hazard, replace with same type fuse. For fuse rating refer to the marking adjacent to the symbol.

Ce symbole indique que le fusible utlise est a rapide. Pour une protection permanente, n'untiliser que fusibles de meme type. Ce darnier est la qu le present symbol est appse.

CIRCUIT NO.	PART NO.	DESCRIPTION
F6901,F6902	252301 or	12A-TUL-250V or
	252196	12A-UL/T-314,Fuse
F901	252199	10A-UL,Fuse <D/C/WT>
F902	252078,	5A-SE-EAK,
	252244 or	5A-SE-TL250V or
	252278	5A-SE-TL250V,Fuse <O>
F903	252164 or	5A-UL/T-237 or
	252258	5A-T/UL-ST2,Fuse <D/C>
	252075,	2.5A-SE-EAK,
	252241 or	2.5A-SE-TL250V or
	252275	2.5A-SE-TL250V,Fuse <O>
F9501	252160 or	2.5A-UL/T-237 or
	252254	2.5A-T/UL-ST2,Fuse <D/C>
	252075,	2.5A-SE-EAK,
	252241 or	2.5A-SE-TL250V or
	252275	2.5A-SE-TL250V,Fuse <O>

Note: <D/C>:120V model only
<O>: Other models except 120V model
<WT>: Asian model only for 230V

2. To initialize the unit

This device employs a microprocessor to perform various functions and operations. If interference generated by an external power supply, radio wave, or other electrical source results in accident which causes the specified operations and functions to operate abnormally.
To perform a result, please follow the procedure below.

1. Press and hold down the VIDEO-1 button, then press the STANDBY/ON button.
2. After "CLEAR" is displayed, the preset memory and each mode stored in the memory, such as surround, are initialized and will return to the factory setting.
3. Unplug the power supply cord.

3. Safety-check out

(U.S.A. model only)
After correcting the original service problem, perform the following safety check before releasing the set to the customer.
Leakage Current Check
Measure leakage current to a known earth ground(water pipe, conduit, etc.) by connecting a leakage current tester between the earth ground and exposed metal parts of the appliance (input/output terminals, screwheads,metal overlays, etc.).
Plug the power supply cord directly into a 120V AC 60 Hz outlet and turn Standby switch on. Any current meausred must not exceed 0.5mA.

4.Setting the voltage selector (Worldwide models only)

Worldwide models are equipped with a voltage selector to conform with local power supplies. Be sure to set this switch to match the voltage of the power supply in your area before plugging in the unit.

Determine the proper voltage for your area: 220-230 V or 120 V. If the preset voltage is not correct for your area, insert a screwdriver into the groove in the switch. Slide the switch all the way to the upper (120 V) or to the lower (220-230 V), whichever is appropriate.

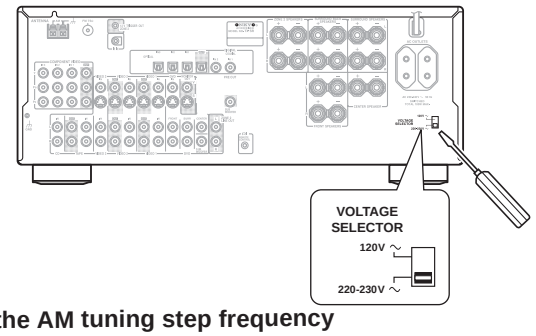

5.Setting the AM tuning step frequency

(Worldwide models only)

1

Press the [RECEIVER] button followed by the [SETUP] button.
The main menu appears onscreen.

2

Use the Up and Down [▲]/[▼] buttons to select "1. initial Setup," and then press [ENTER].
The Initial Setup menu appears.

3 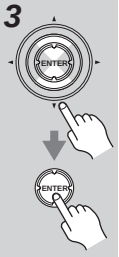

Use the Up and Down [▲]/[▼] buttons to select "3. Hardware Setup," and then press [ENTER].
The Hardware Setup menu appears.

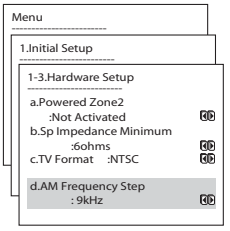

4

Use the Up and Down [▲]/[▼] buttons to select "d. AM Frequency Step, and then use the Left and Right [◀]/[▶] buttons to select:

10 kHz: Select if 10 kHz steps are used in your area.

9 kHz: Select if 9 kHz steps are used in your area.

5

Press the [SETUP] button.
The setup menu closes.

EXPLODED VIEW

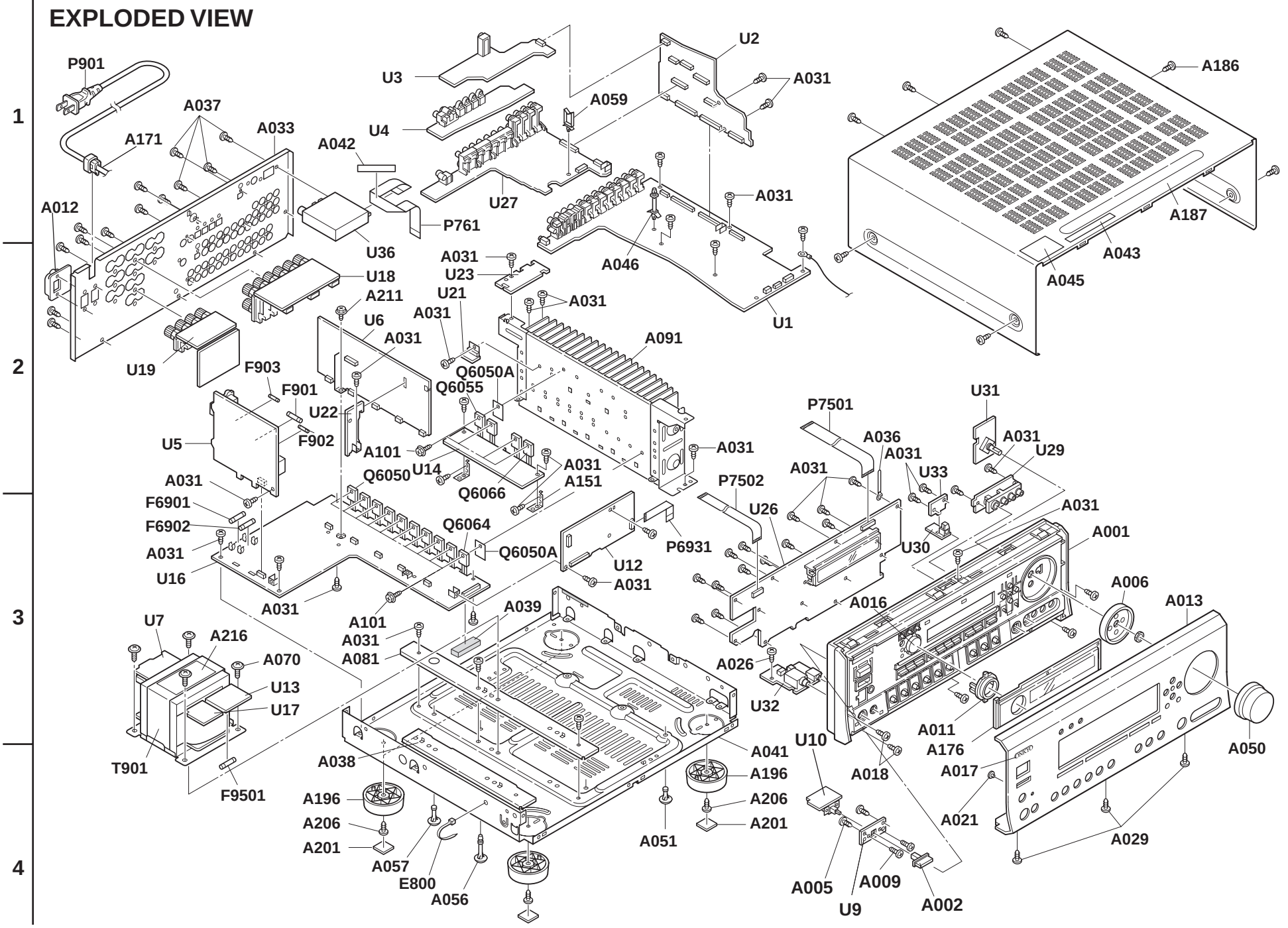

BLOCK DIAGRAM Amplifier section

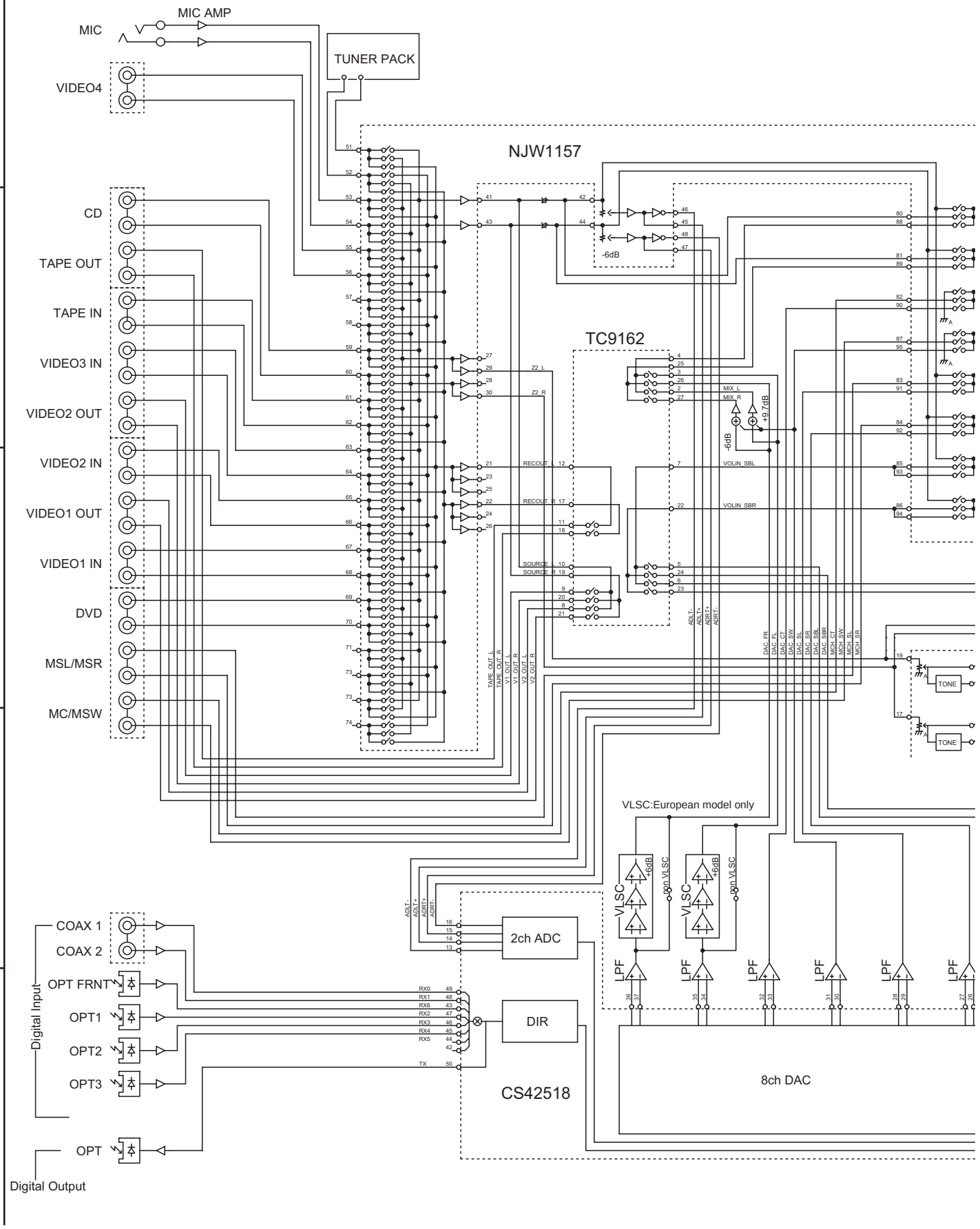

BLOCK DIAGRAM Amplifier section

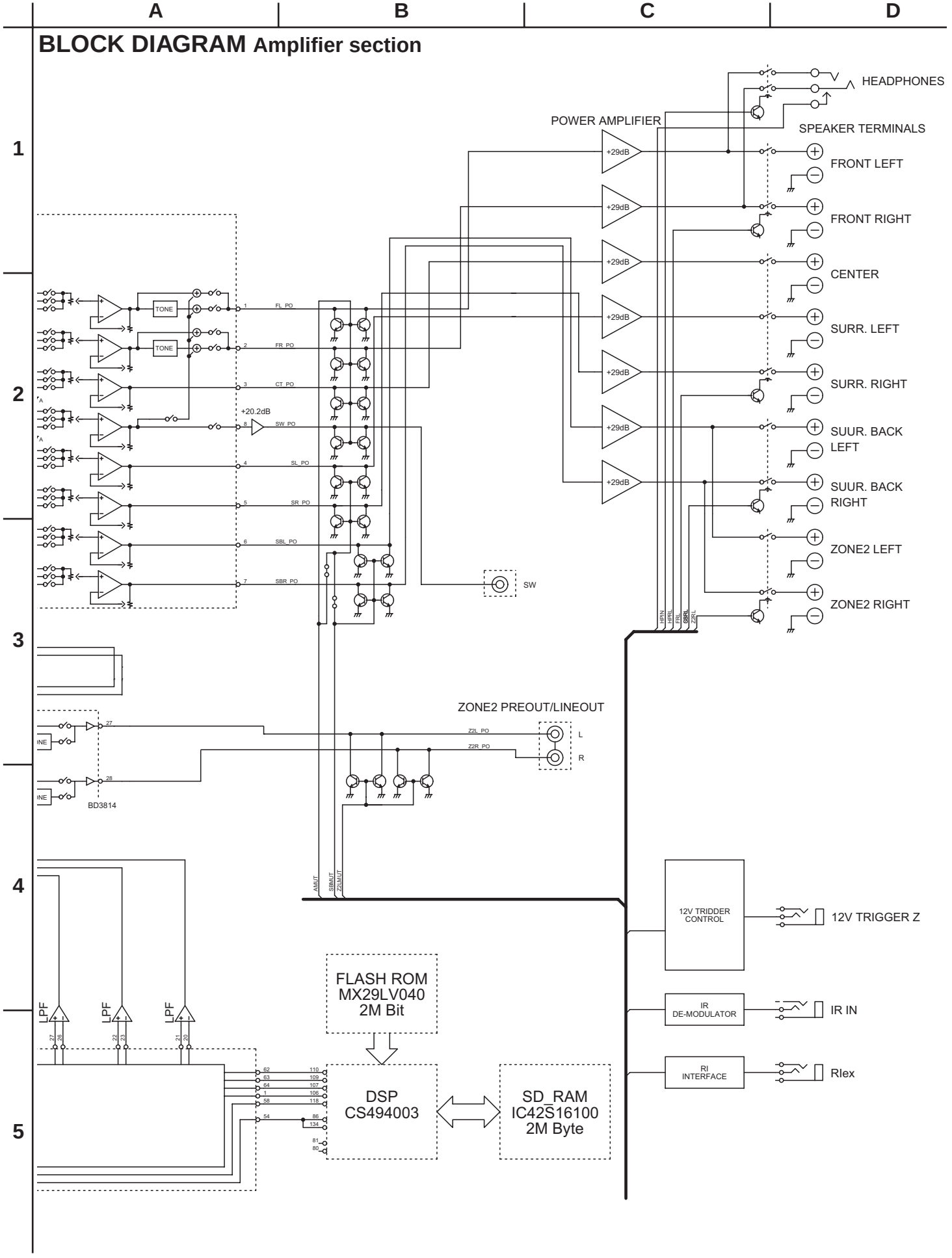

BLCOK DIAGRAM Video section

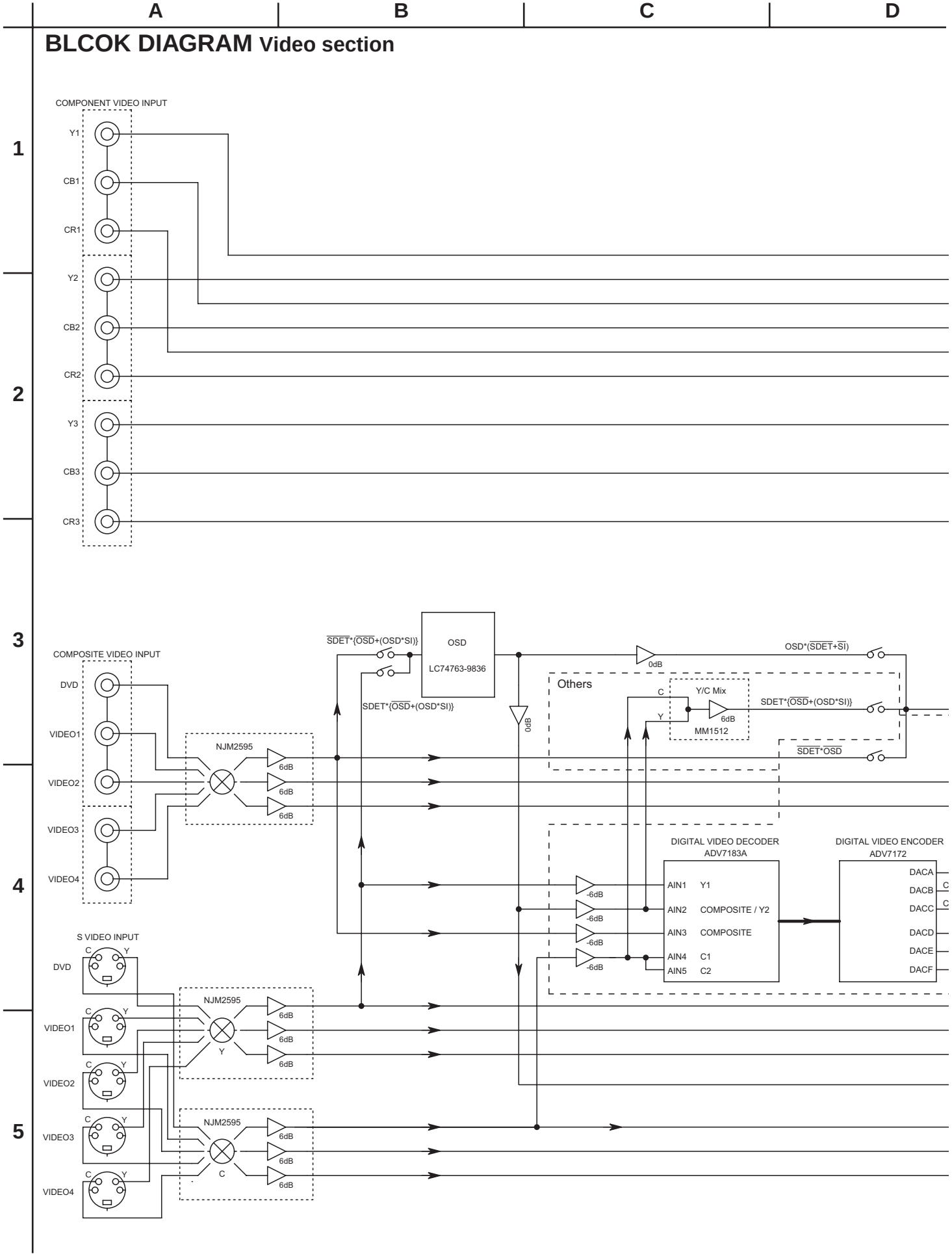

BLCOK DIAGRAM Video section

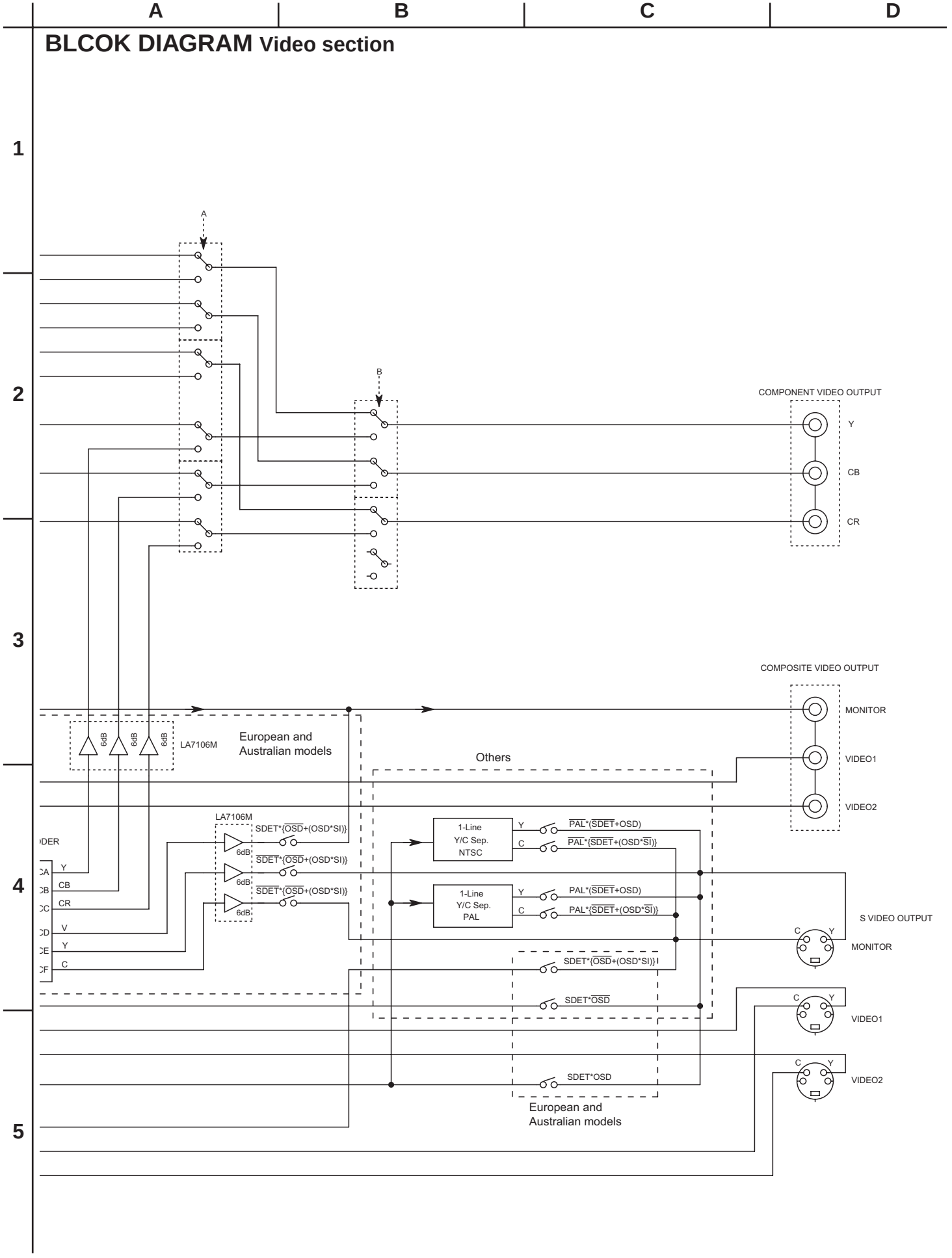

SCHEMATIC DIAGRAM 1
Preamplifier section

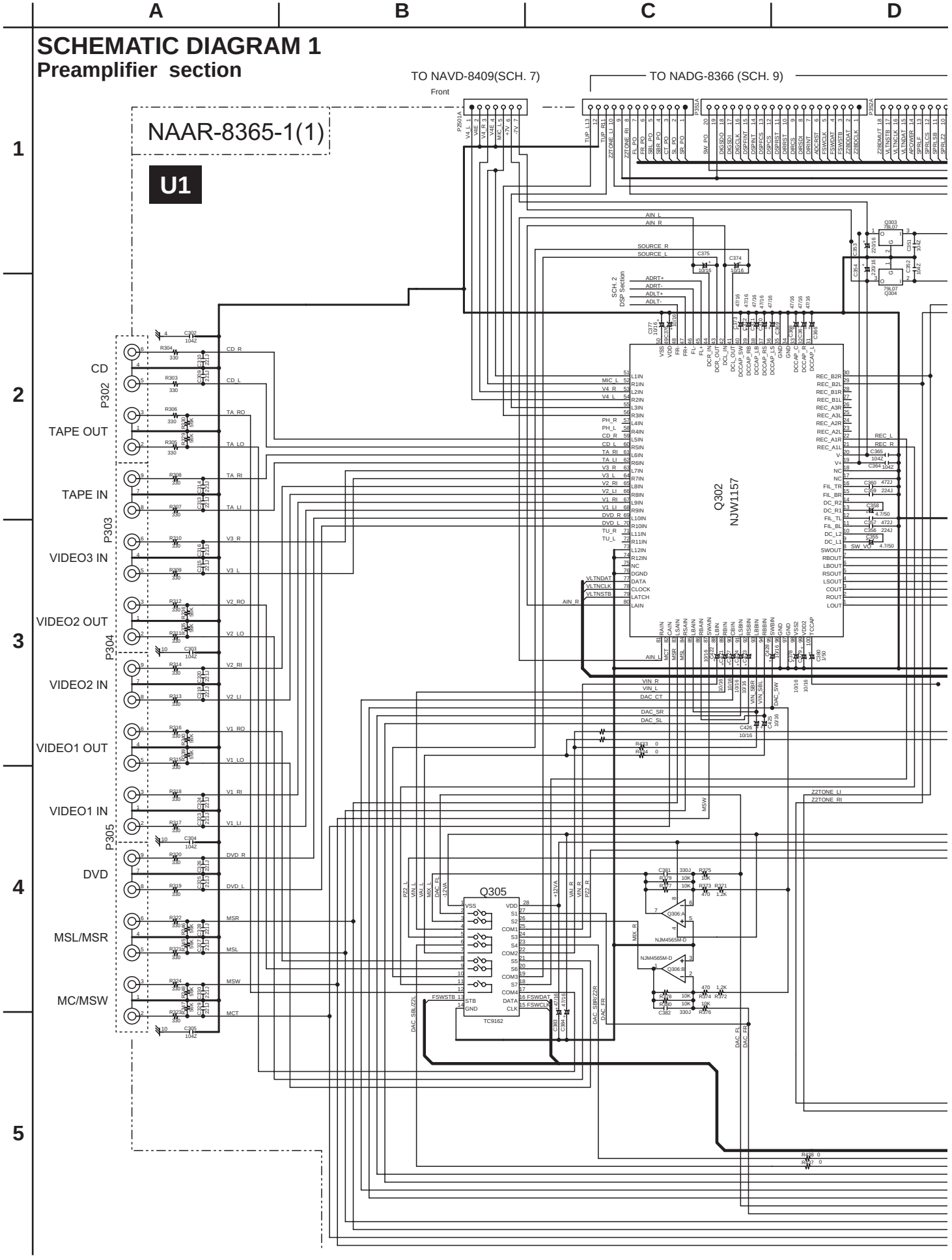

SCHEMATIC DIAGRAM 1

Preamplifier section

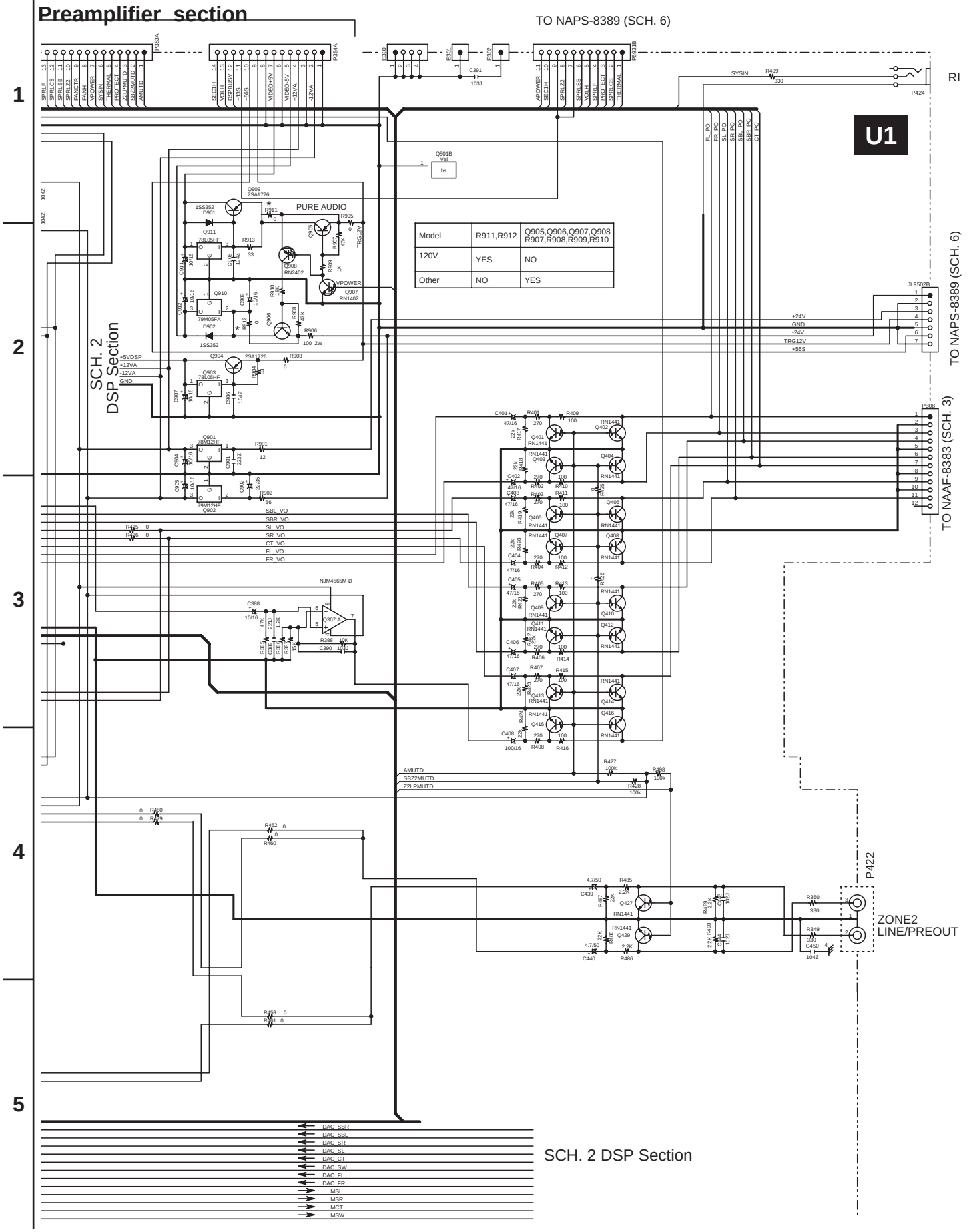

Model	R911,R912	Q905,Q906,Q907,Q908 R907,R908,R909,R910
120V	YES	NO
Other	NO	YES

SCHEMATIC DIAGRAM 2

DSP section

NAAR-8365-1(2)

U1

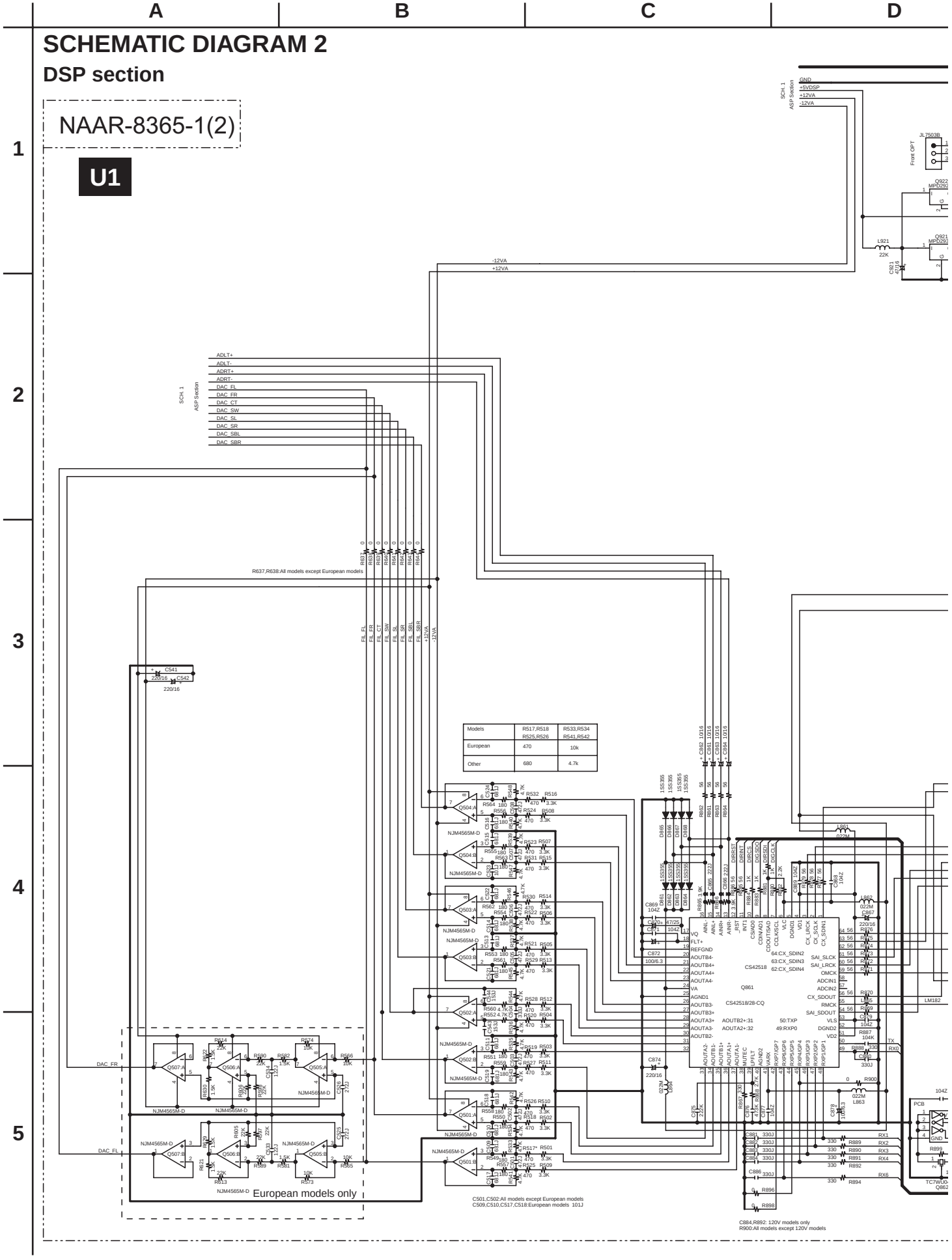

SCHEMATIC DIAGRAM 2 DSP section

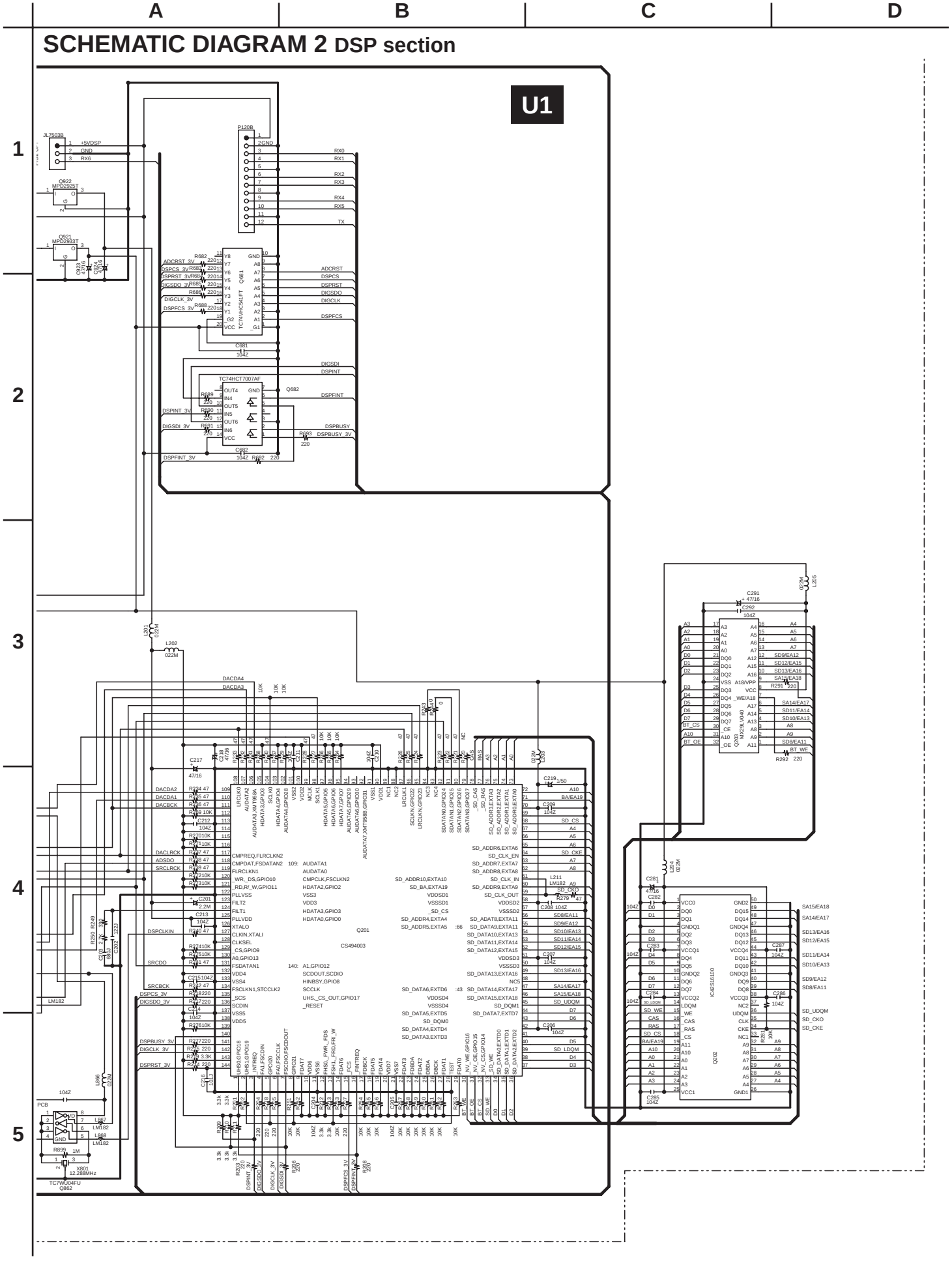

SCHEMATIC DIAGRAM 3

Driver section

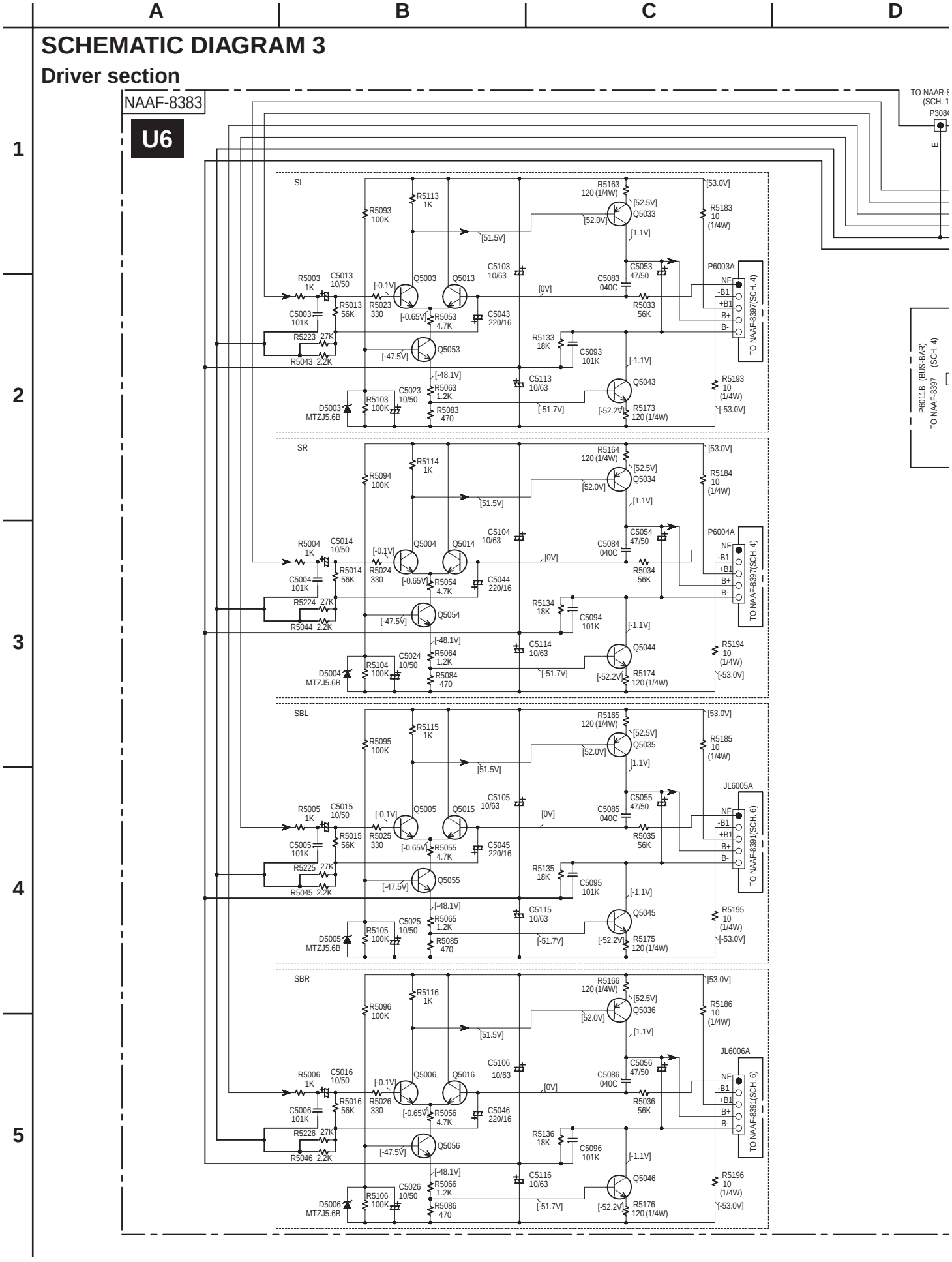

SCHEMATIC DIAGRAM 3

Driver section

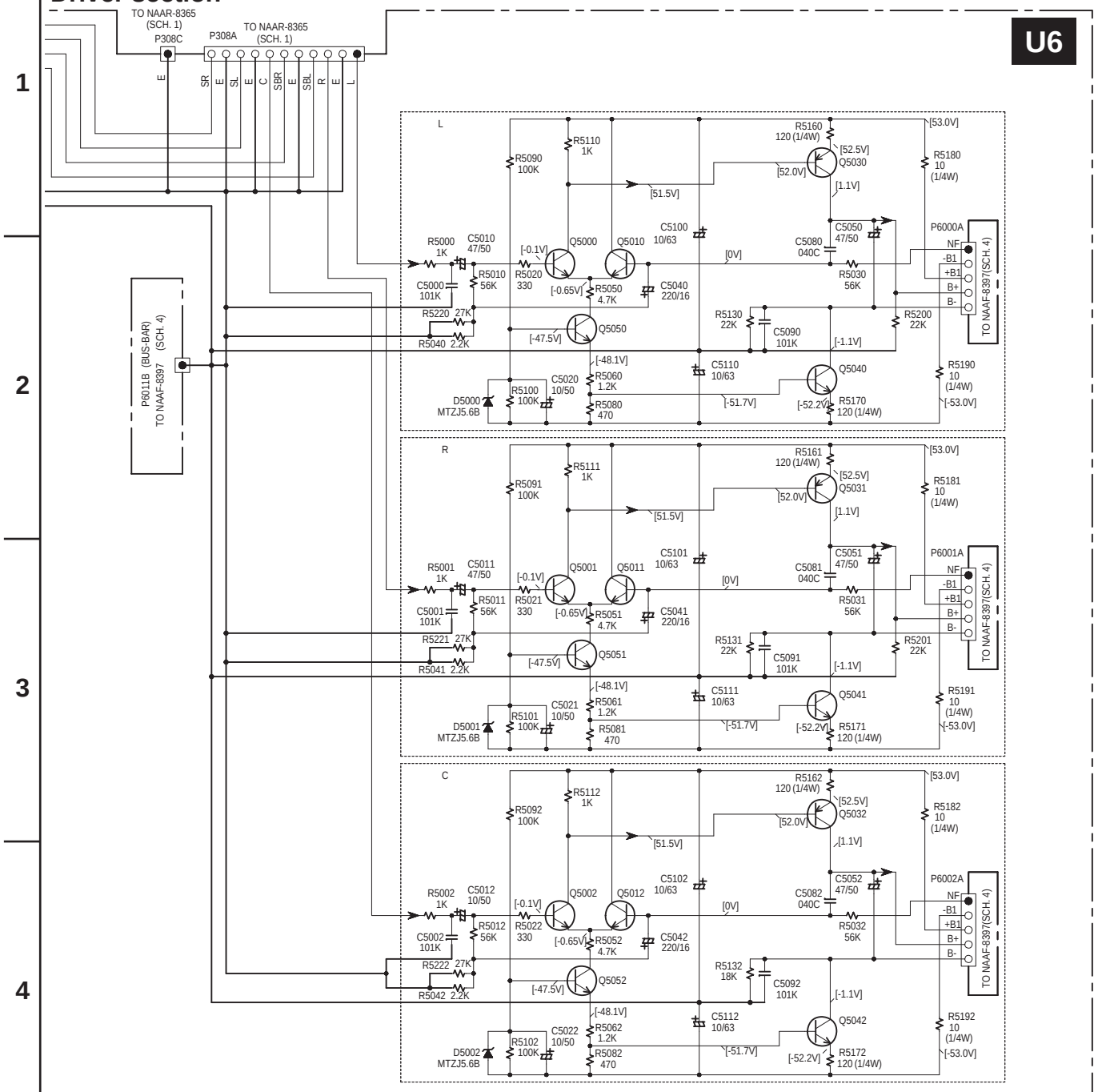

SEMICONDUCTORS

NO.	X=0,1,2 (0:L, 1:R, 2:C)	X=3,4,5,6 (3:SL, 4:SR, 5:SBL, 6:SBR)
Q500X,Q501X	2SC1775A-E,F OR 2SC1845-E	KTC3200-BL OR 2SC1775A-E,F OR 2SC1845-E
Q503X	2SA1360-Y,O	KTA1024-Y,O OR 2SA949-Y,O
Q504X	2SC3423-Y,O	KTC3206-Y,O OR 2SC2229-Y,O
Q505X	KTC3200-BL,GR OR 2SC1775A-E,F OR 2SC1845-E,F	KTC3200-BL,GR OR 2SC1775A-E,F OR 2SC1845-E,F

SCHEMATIC DIAGRAM 4
Power amplifier section

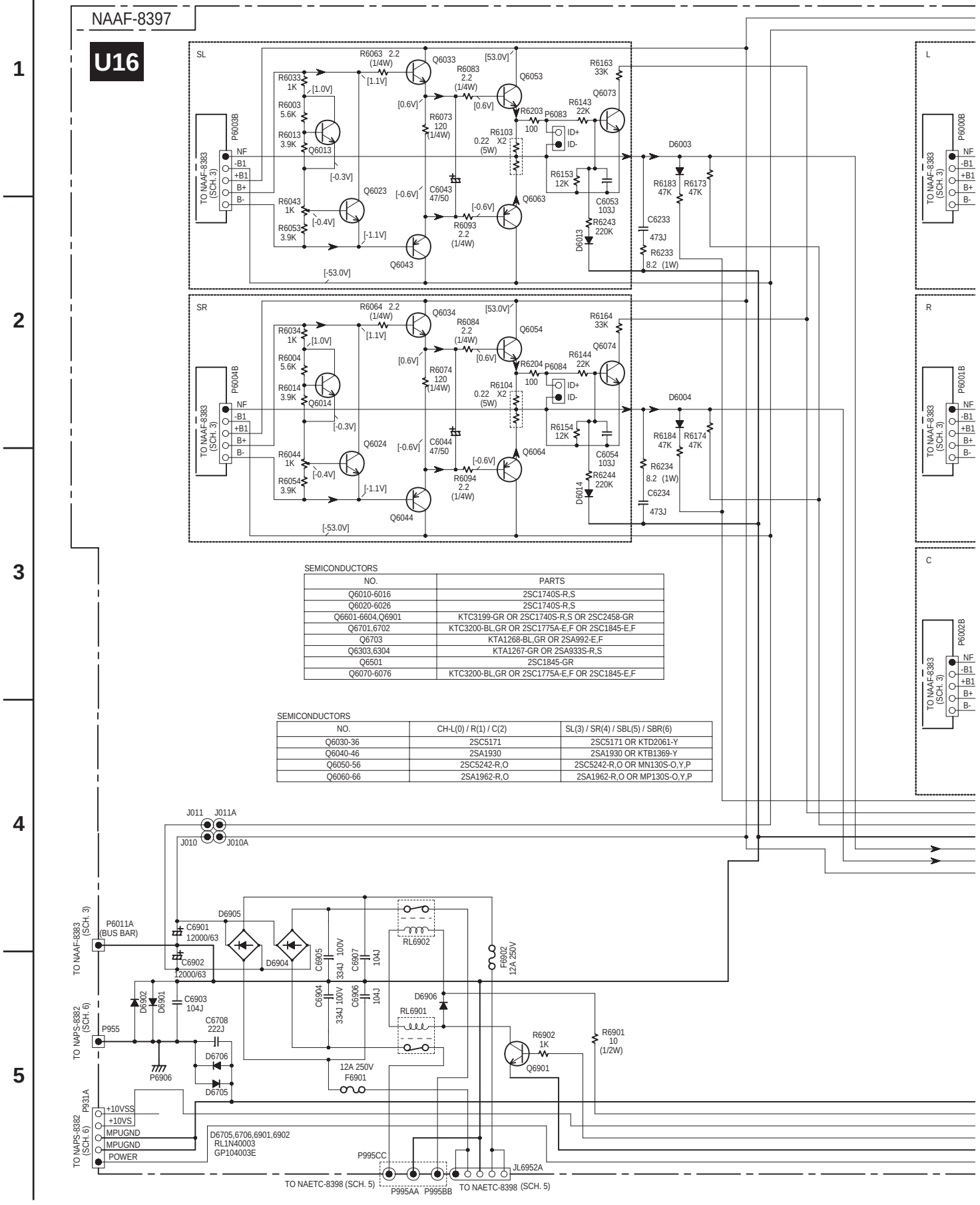

SEMICONDUCTORS

NO.	PARTS
Q6010-6016	2SC1740S-R,S
Q6020-6026	2SC1740S-R,S
Q6601-6604,Q6901	KTC3199-GR OR 2SC1740S-R,S OR 2SC2458-GR
Q6701,6702	KTC3200-BL,GR OR 2SC1775A-E,F OR 2SC1845-E,F
Q6703	KTA1268-BL,GR OR 2SA992-E,F
Q6303,6304	KTA1267-GR OR 2SA933S-R,S
Q6501	2SC1845-GR
Q6070-6076	KTC3200-BL,GR OR 2SC1775A-E,F OR 2SC1845-E,F

SEMICONDUCTORS

NO.	CH-L(0) / R(1) / C(2)	SL(3) / SR(4) / SBL(5) / SBR(6)
Q6030-36	2SC5171	2SC5171 OR KTD2061-Y
Q6040-46	2SA1930	2SA1930 OR KTB1369-Y
Q6050-56	2SC5242-R,O	2SC5242-R,O OR MN130S-O,Y,P
Q6060-66	2SA1962-R,O	2SA1962-R,O OR MP130S-O,Y,P

SCHEMATIC DIAGRAM 4
Power amplifier section

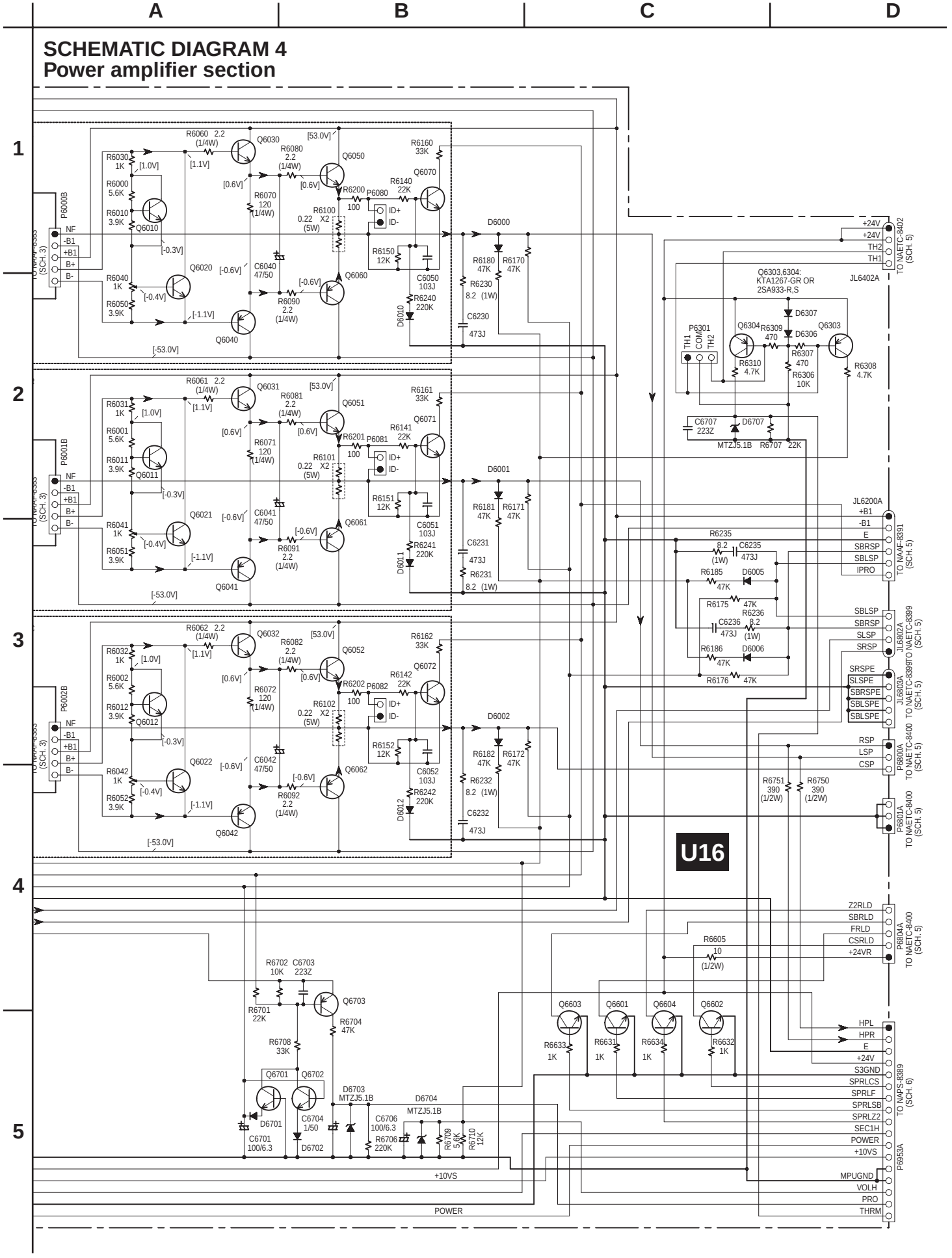

SCHEMATIC DIAGRAM 5

Power amplifier and Speaker terminal sections

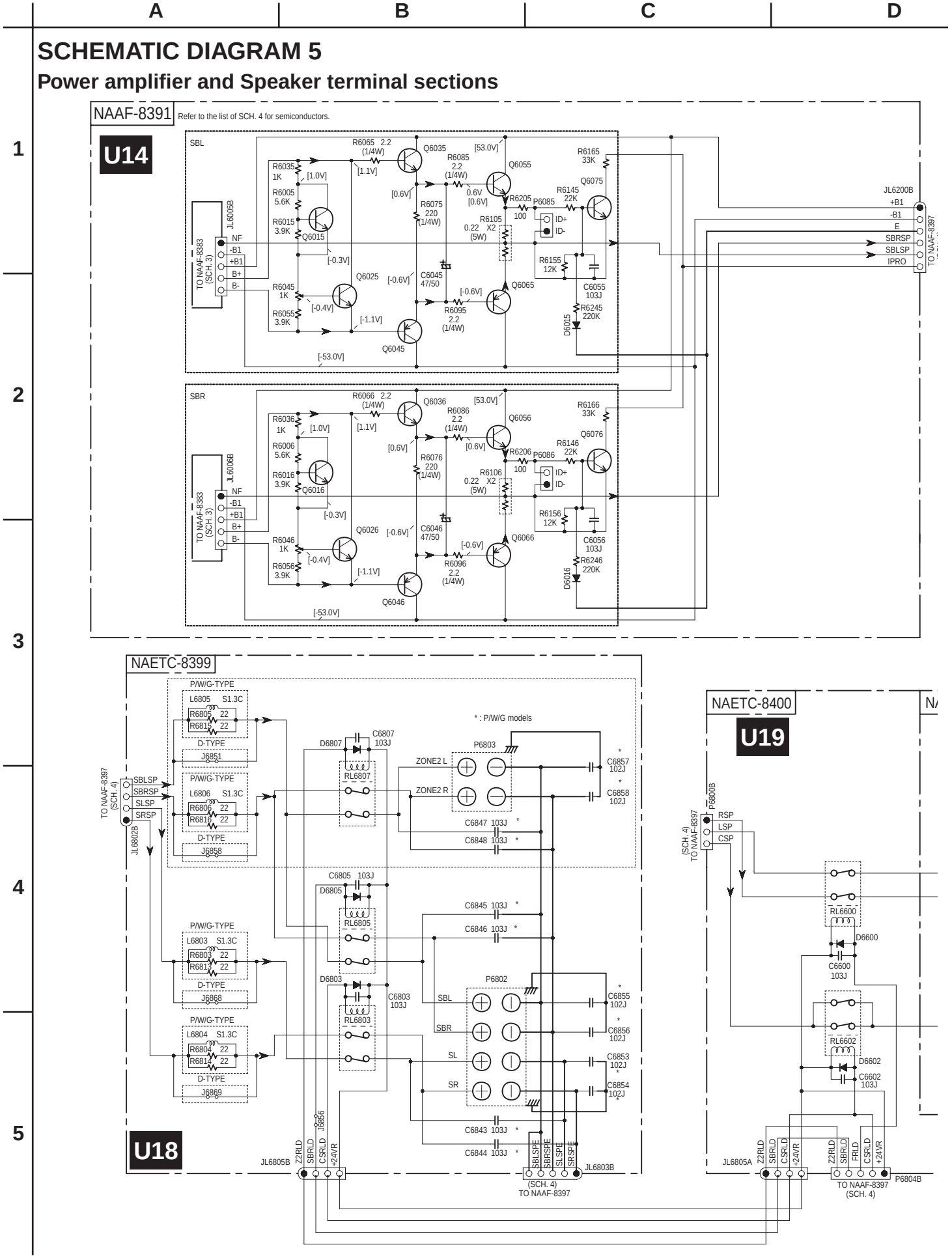

SCHEMATIC DIAGRAM 5

Power amplifier and Speaker terminal sections

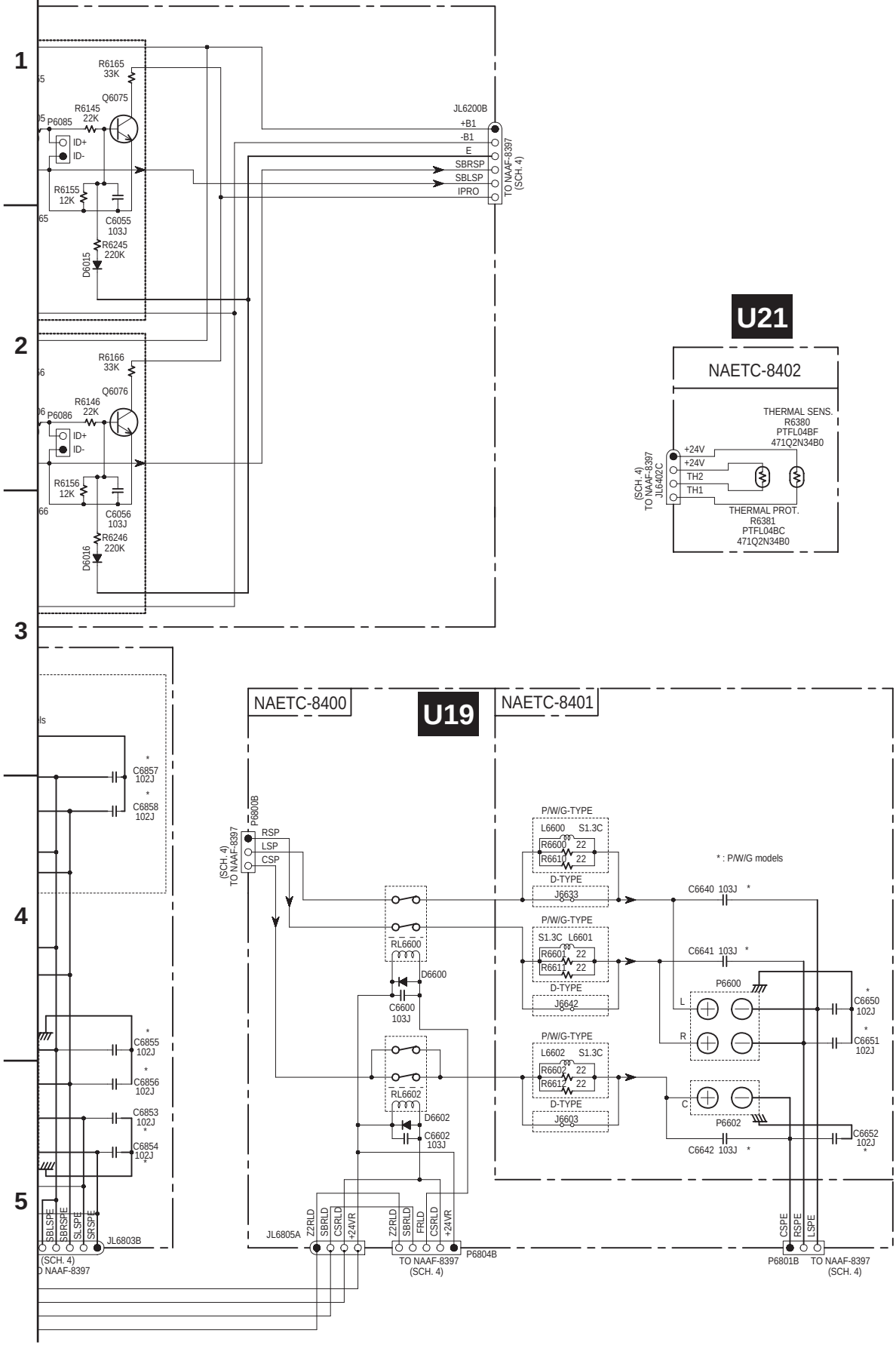

A B C D

SCHEMATIC DIAGRAM 6

Power supply section

1

NOTE

- THE COMPONENTS IDENTIFIED BY MARK ⚠ ARE CRITICAL FOR SAFETY REPLACE ONLY WITH PART NUMBER SPECIFIED.
- VOLTAGE (MEASURED WITH VOLTMETER) IS DC VOLTAGE.(NO INPUT SIGNAL)
- ELECTROLYTIC CAPACITORS ( ) ARE IN uF/WV.
- ALL CAPACITORS ARE IN pF/50WV UNLESS OTHERWISE NOTED.
  EX) 030=3pF 330=33pF 331=330pF 333=0.033uF
- ALL RESISTORS ARE IN OHMS 1/4WATTS UNLESS OTHERWISE NOTED.
- THE THICK LINES ON PC BOARD ARE THE PRINTING SIDE OF THE PARTS.
  EX) PRINTING SIDE
- CIRCUIT IS SUBJECT TO CHANGE FOR IMPROVEMENT.

2

CAUTION

FOR CONTINUED PROTECTION AGAINST FIRE HAZARD, REPLACE ONLY WITH FUSE OF SAME MODEL AND RATING INDICATED.

THIS SYMBOL LOCATED NEAR THE FUSE INDICATES THAT THE FUSE USED IS SLOW OPERATING MODEL FOR CONTINUED PROTECTION AGAINST FIRE HAZARD,REPLACE WITH SAME MODEL FUSE. FOR FUSE RATING REFER TO THE MARKING ADJACENT TO THE SYMBOL

ATTENTION

AFIN D'ASSURER UNE PROTECTION PERMANENTE CONTRE LES RISQUES D'INCENDIE, REMPLACER UNIQUEMENT PAR UN FUSIBLE DE MEME MODEL ET CALIBRATION COMME INDIQUE.

CE SYMBOLE INDIQUE QUE LE FUSIBLE UTLISE EST E LENT. POUR UNE PROTECTION PERMANENTE,N'UTILISER QUE DES FUSIBLES DE MEME MODEL. CE DARNIER EST INDIQUE LA QU LE PRESENT SYMBOL EST APPOSE.

3

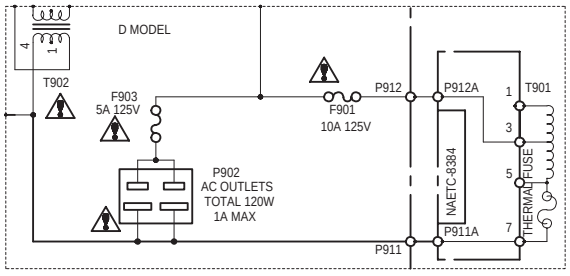

4

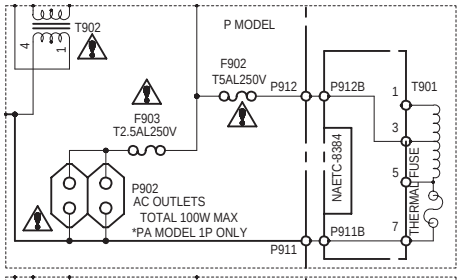

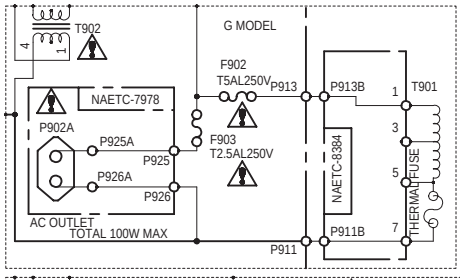

5

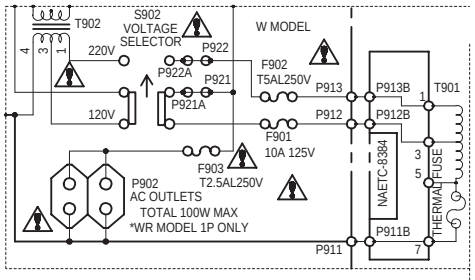

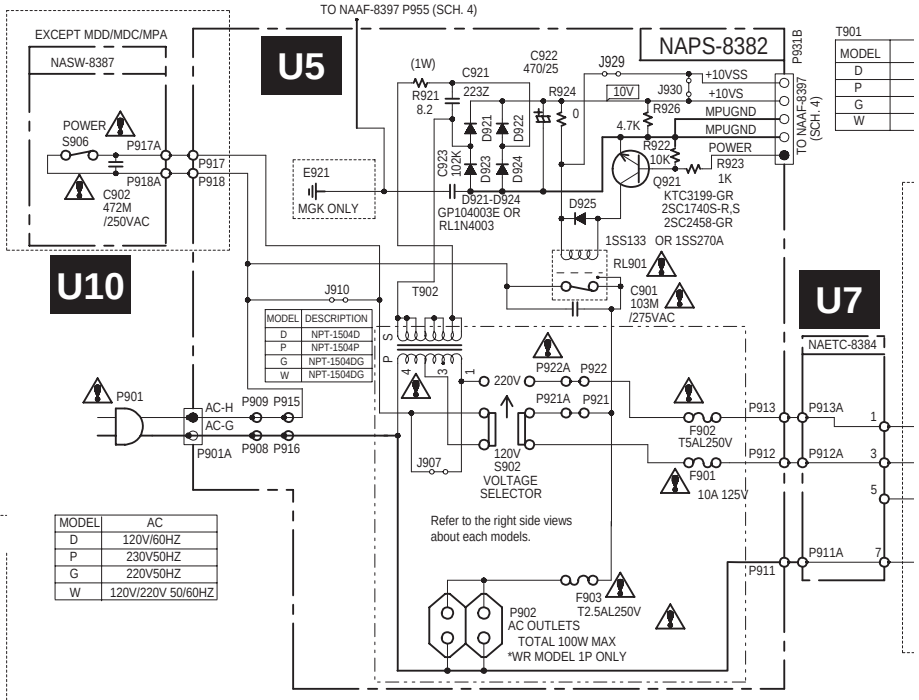

MODEL	AC
D	120V/60HZ
P	230V50HZ
G	220V50HZ
W	120V/220V 50/60HZ

SCHEMATIC DIAGRAM 6

Power supply section

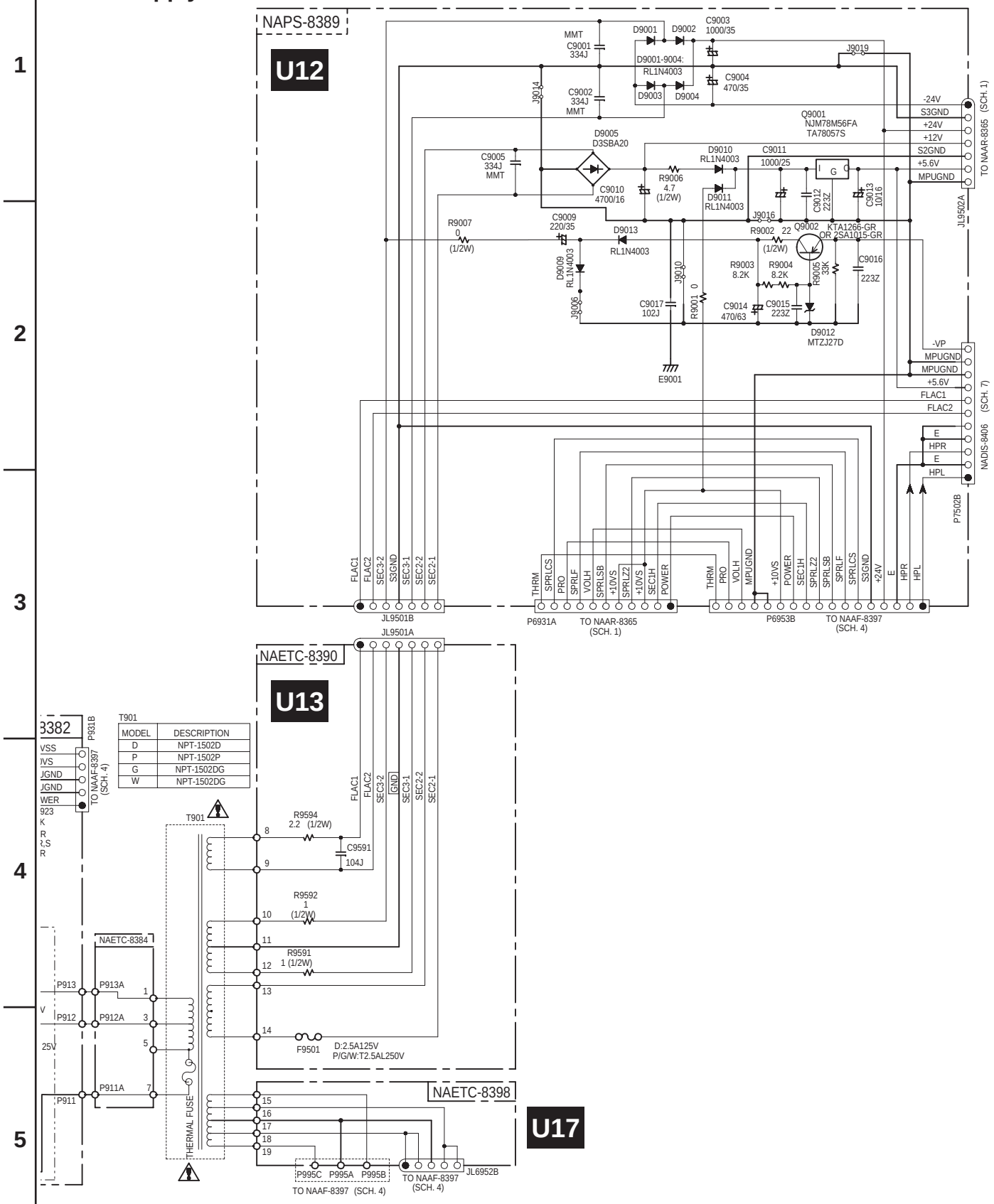

SCHEMATIC DIAGRAM 7
Display section

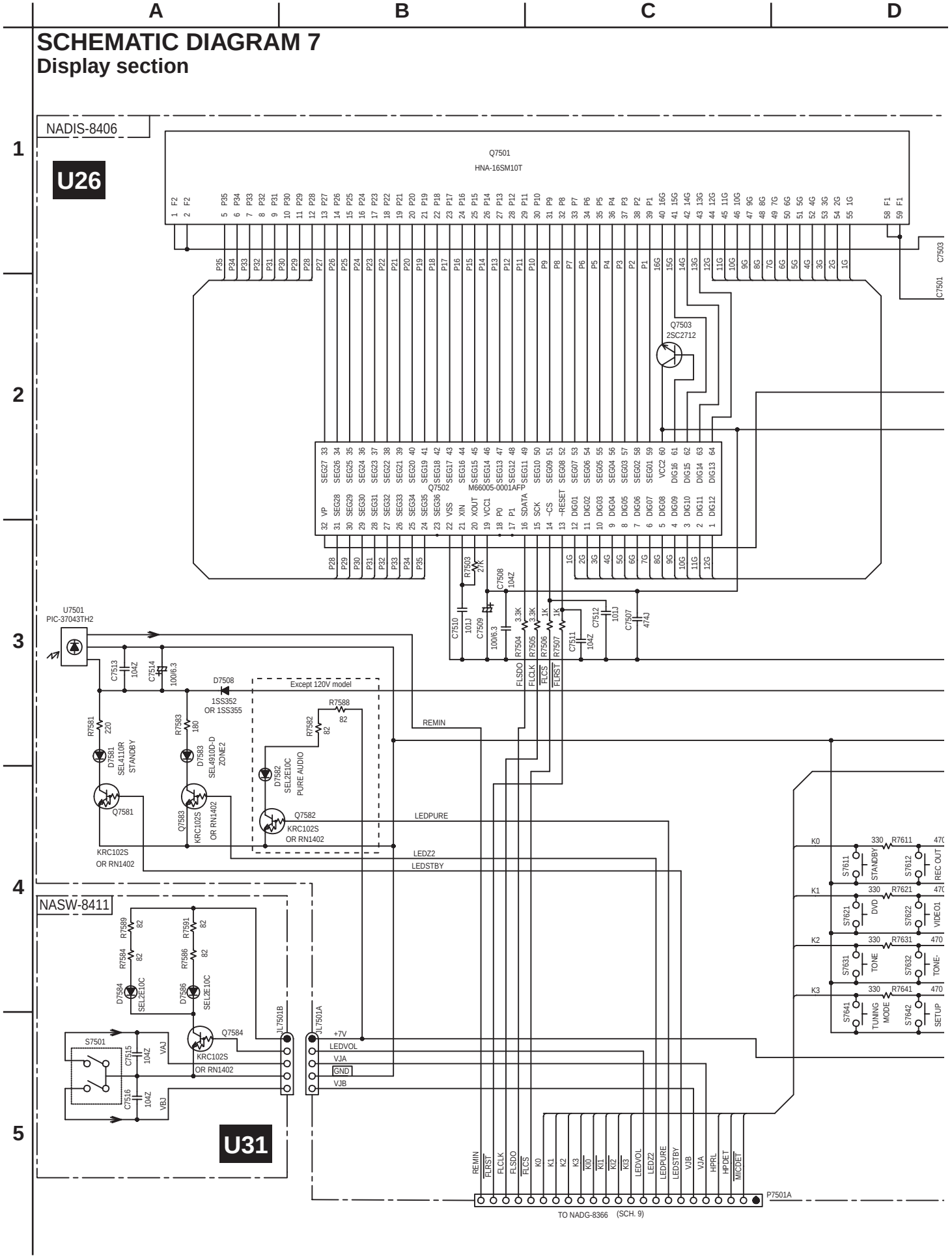

SCHEMATIC DIAGRAM 7
Display section

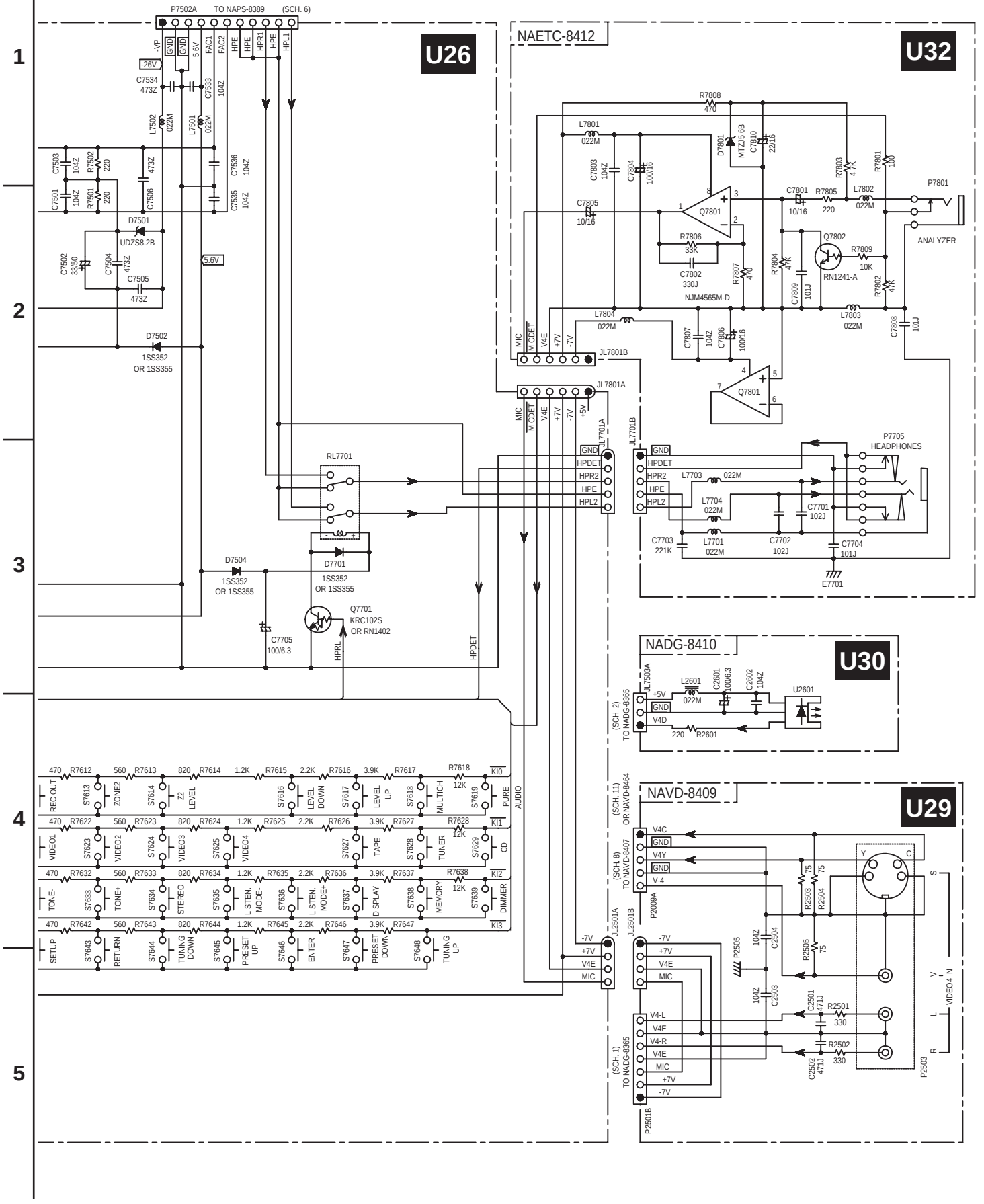

SCHEMATIC DIAGRAM 8-1

Video section All models except European and Australian models

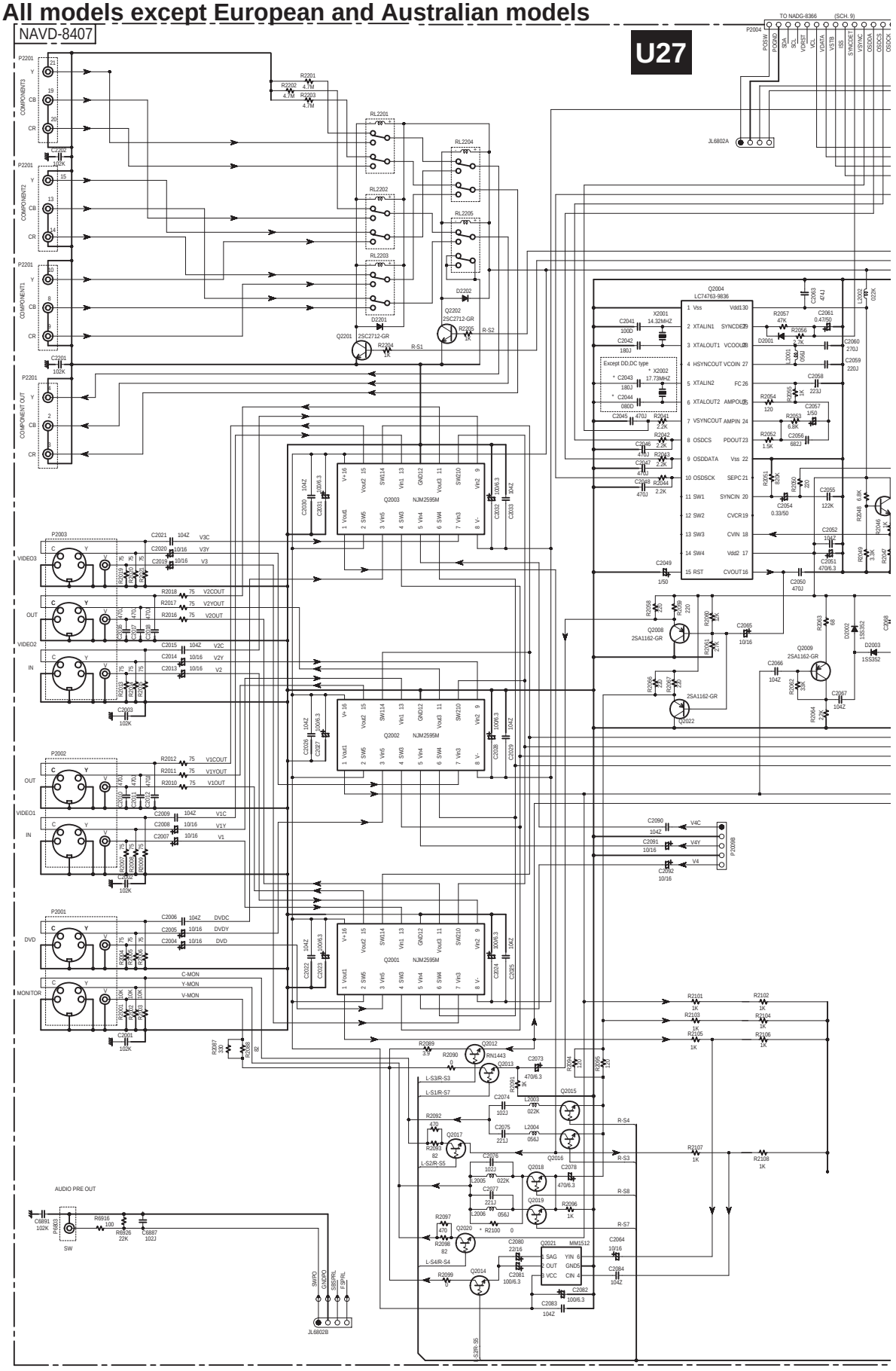

SCHEMATIC DIAGRAM 8
Video section

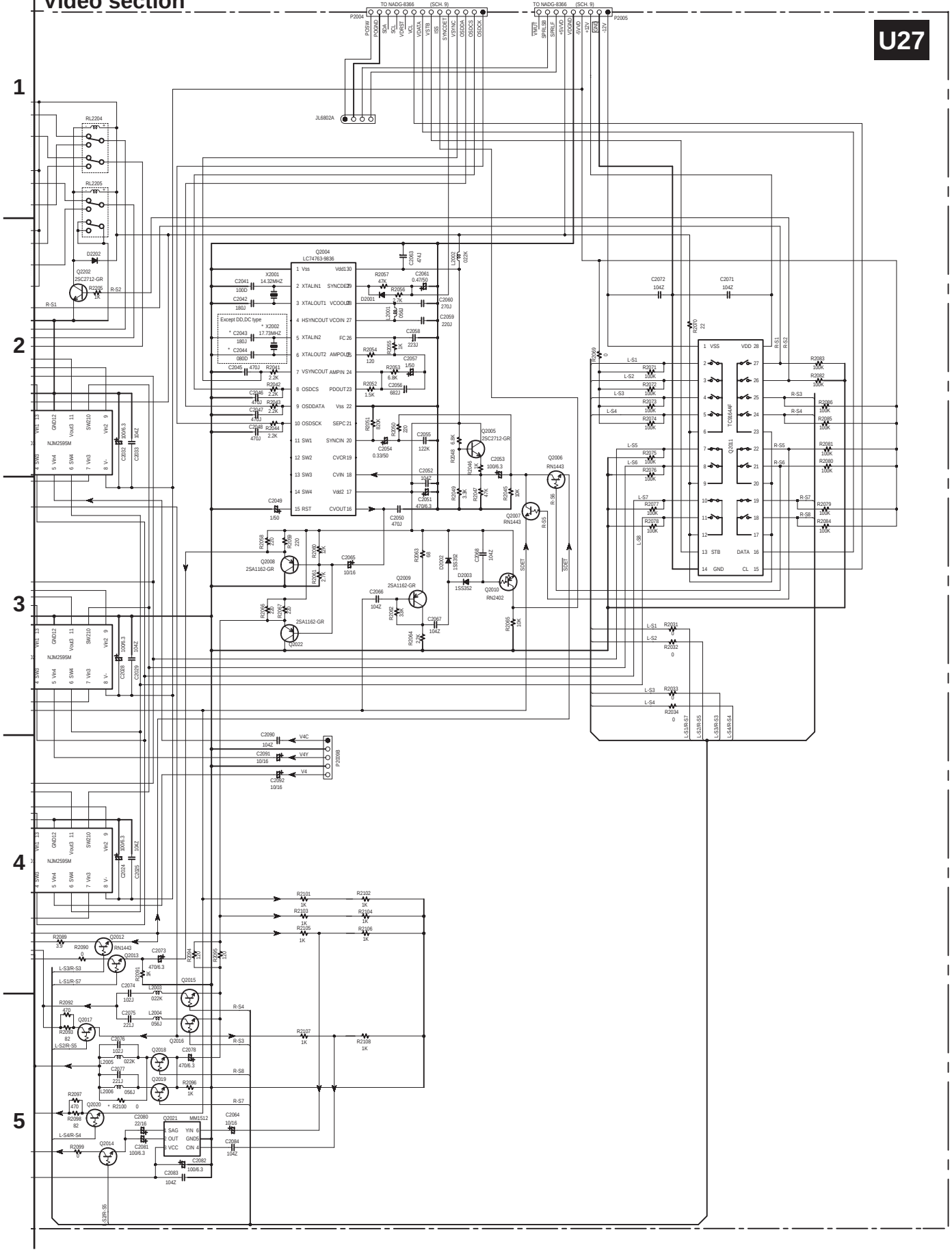

SCHEMATIC DIAGRAM 8-2 Video section

European and Australian models

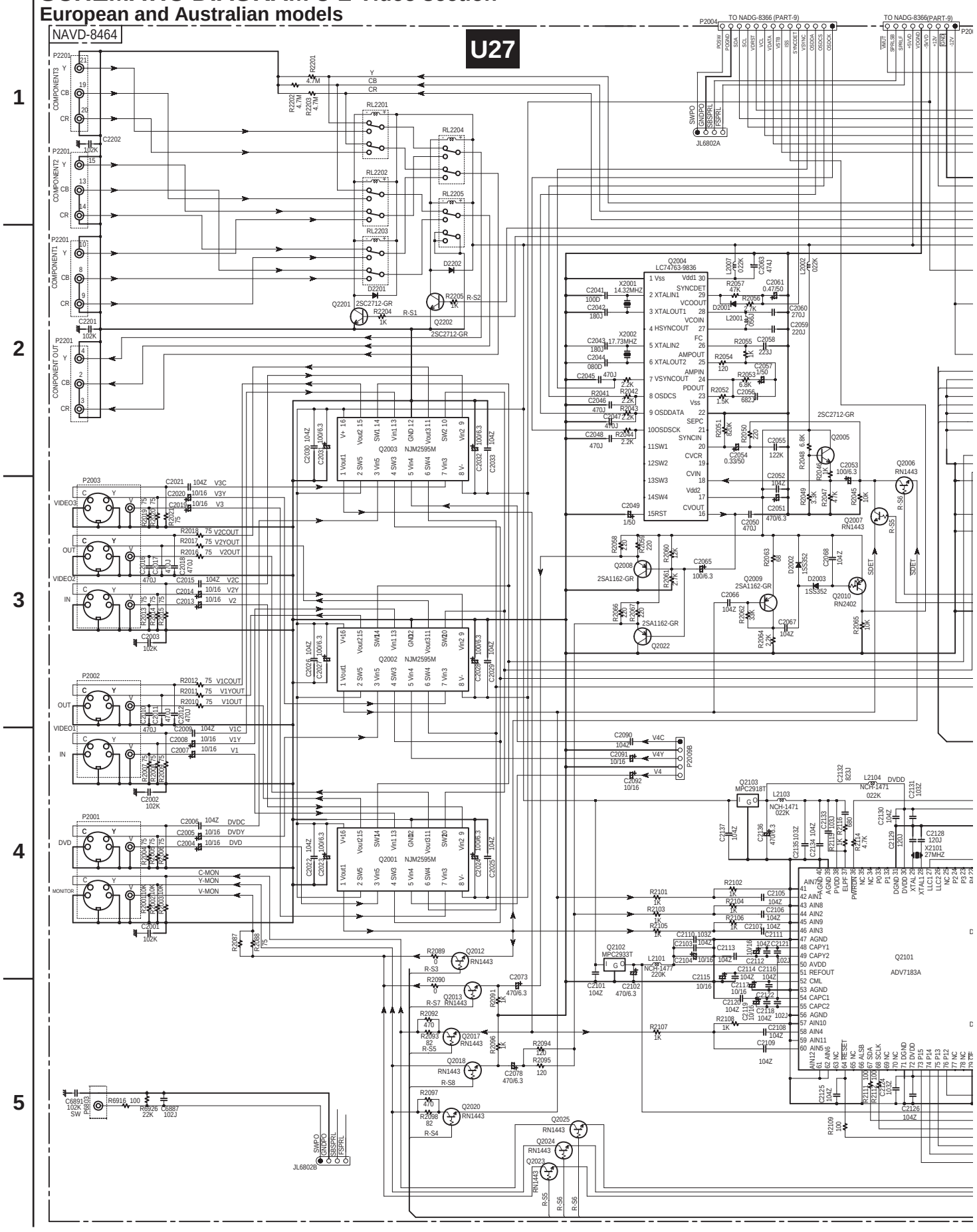

SCHEMATIC DIAGRAM 8-2 Video section

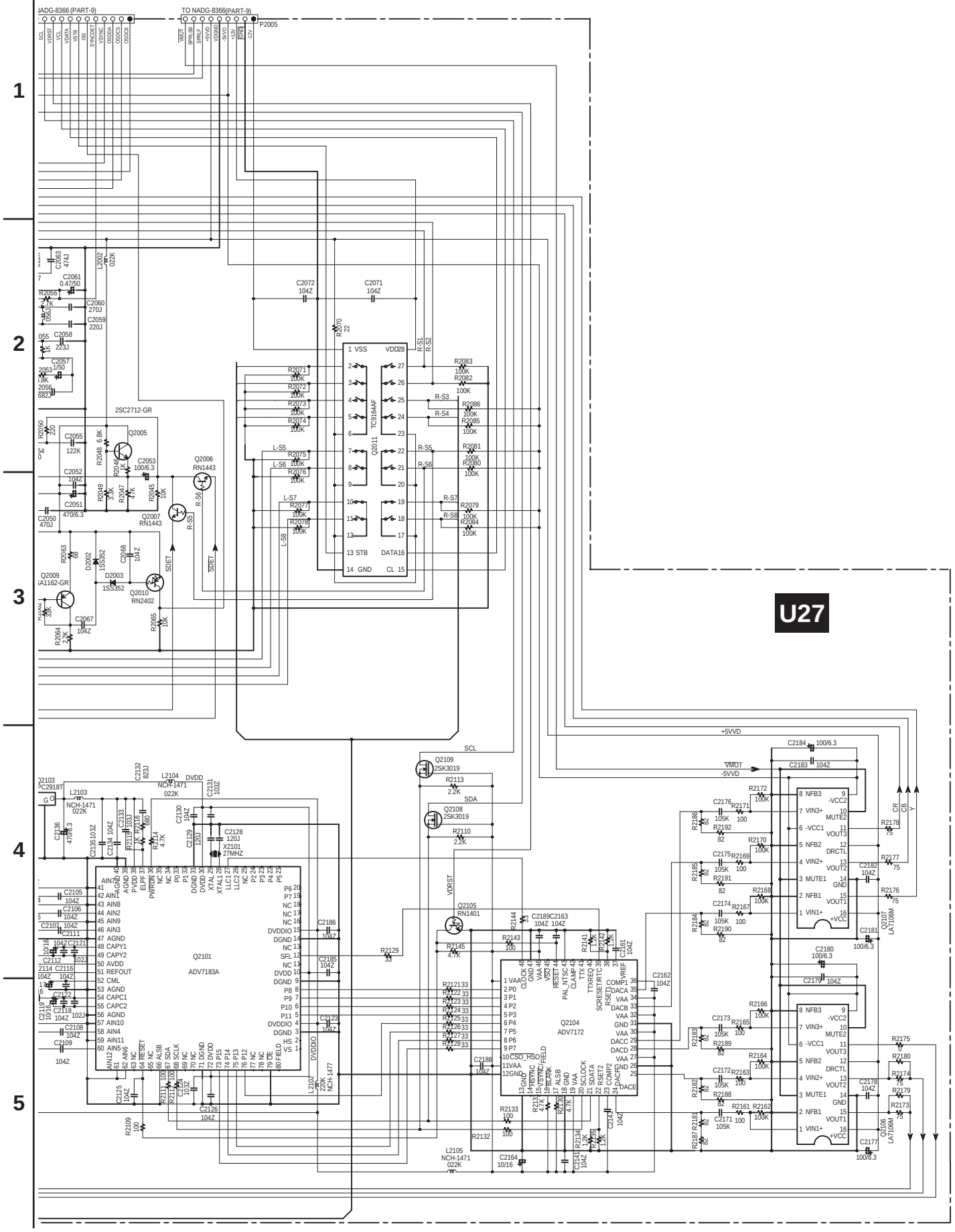

SCHEMATIC DIAGRAM 9 Microprocessor section

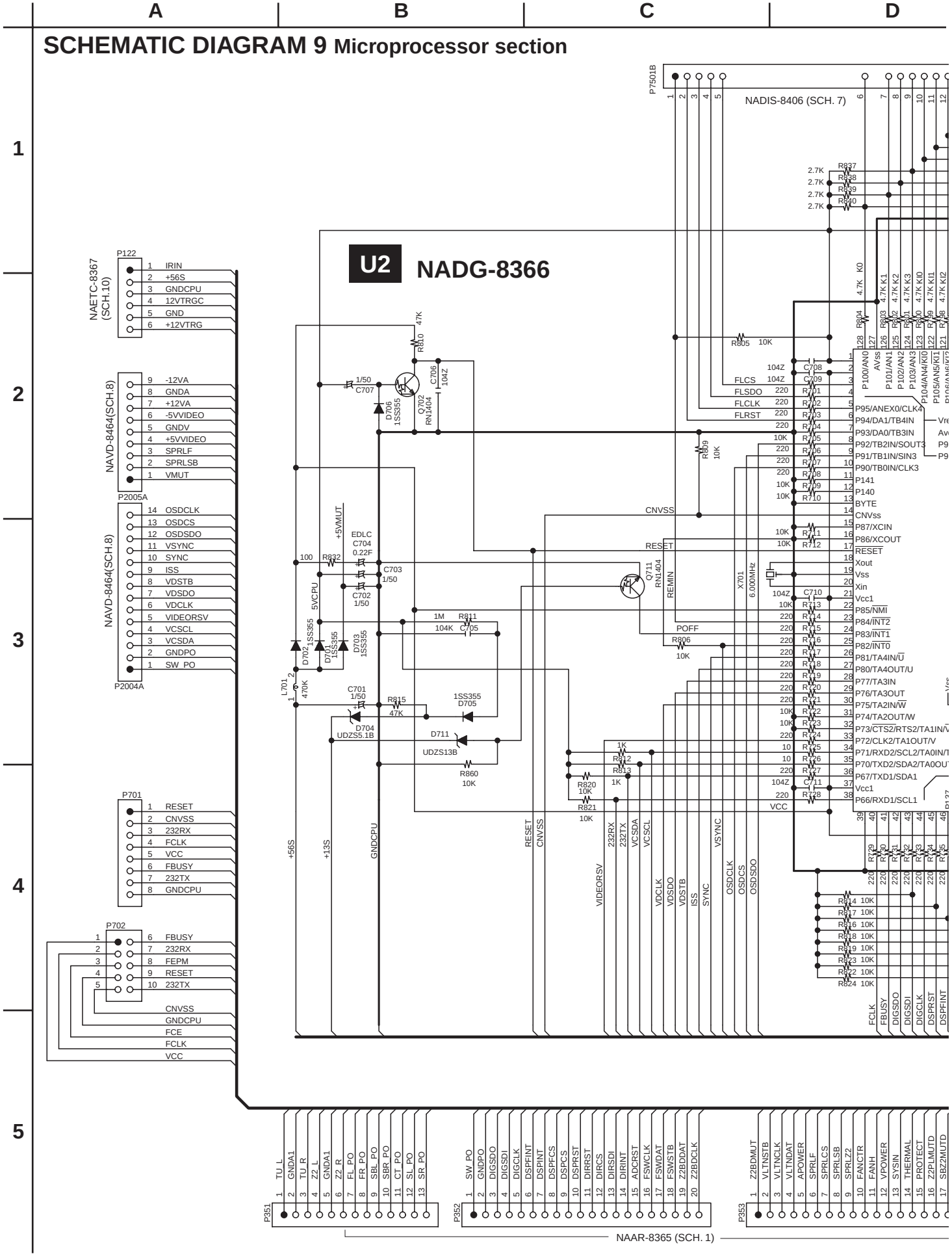

SCHEMATIC DIAGRAM 9 Microprocessor section

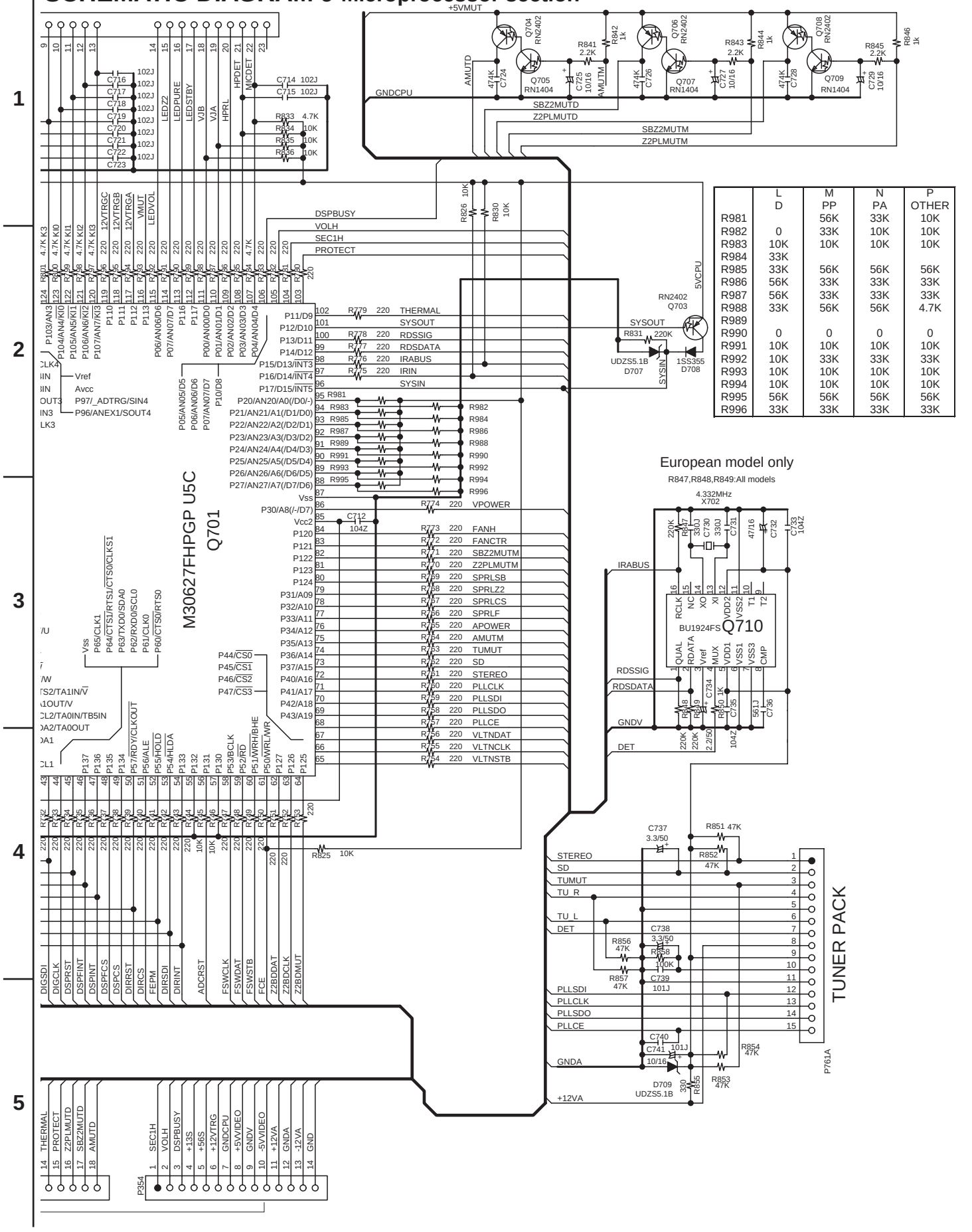

	L D	M PP	N PA	P OTHER
R981		56K	33K	10K
R982	0	33K	10K	10K
R983	10K	10K	10K	10K
R984	33K			
R985	33K	56K	56K	56K
R986	56K	33K	33K	33K
R987	56K	33K	33K	33K
R988	33K	56K	56K	4.7K
R989				
R990	0	0	0	0
R991	10K	10K	10K	10K
R992	10K	33K	33K	33K
R993	10K	10K	10K	10K
R994	10K	10K	10K	10K
R995	56K	56K	56K	56K
R996	33K	33K	33K	33K

A B C D

1 2 3 4 5

SCHEMATIC DIAGRAM 10

I/O termianl sections

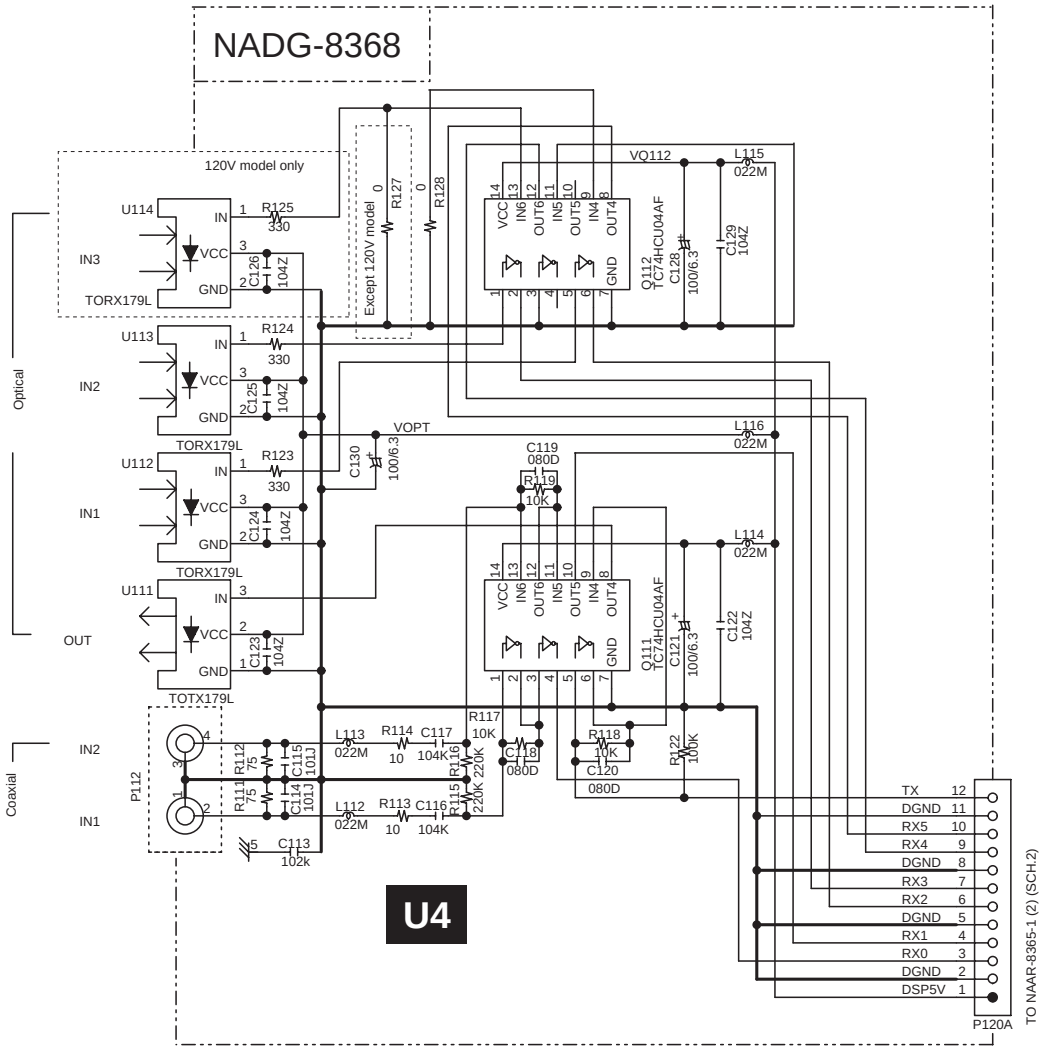

SCHEMATIC DIAGRAM 10

I/O termianl sections

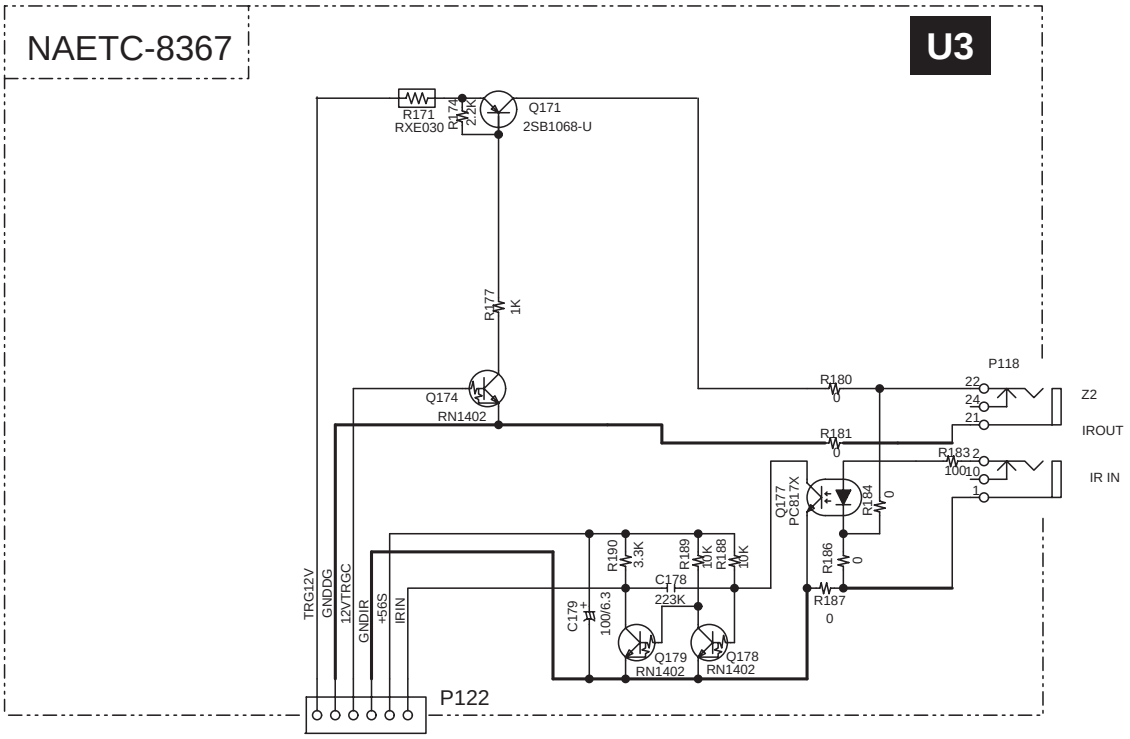

WIRING VIEW

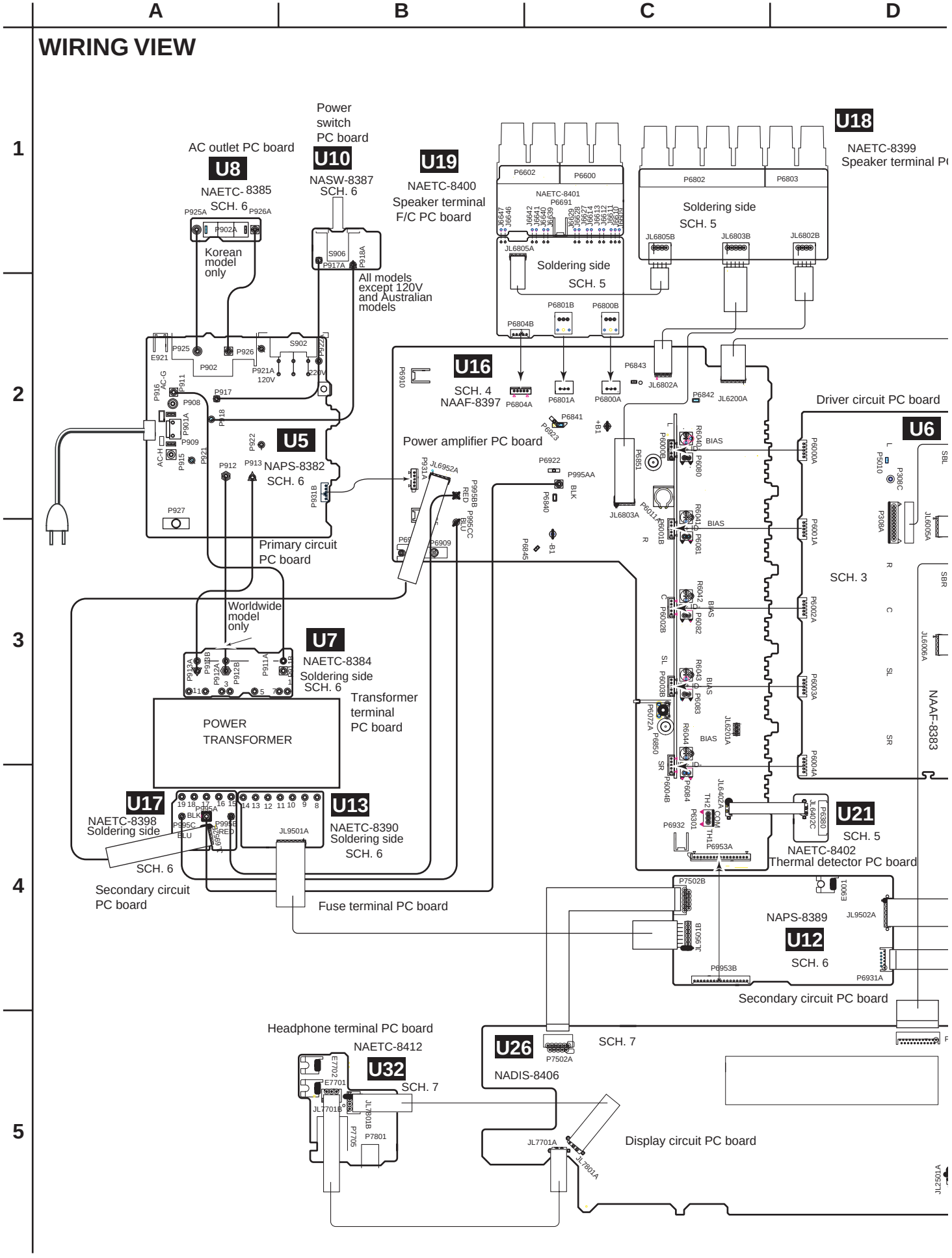
A
B
C
D
1
2
3
4
5
AC outlet PC board
U8
NAETC-8385
SCH. 6
Korean model only
Power switch PC board
U10
NASW-8387
SCH. 6
All models except 120V and Australian models
U19
NAETC-8400
Speaker terminal F/C PC board
U18
NAETC-8399
Speaker terminal PC
Soldering side
SCH. 5
U16
SCH. 4
NAAF-8397
Power amplifier PC board
U5
NAPS-8382
SCH. 6
Primary circuit PC board
Driver circuit PC board
U6
SCH. 3
NAAF-8383
Worldwide model only
U7
NAETC-8384
Soldering side
SCH. 6
Transformer terminal PC board
POWER TRANSFORMER
U17
NAETC-8398
Soldering side
SCH. 6
U13
NAETC-8390
Soldering side
SCH. 6
Secondary circuit PC board
Fuse terminal PC board
U21
SCH. 5
NAETC-8402
Thermal detector PC board
NAPS-8389
U12
SCH. 6
Secondary circuit PC board
Headphone terminal PC board
NAETC-8412
U32
SCH. 7
U26
SCH. 7
NADIS-8406
Display circuit PC board

WIRING VIEW

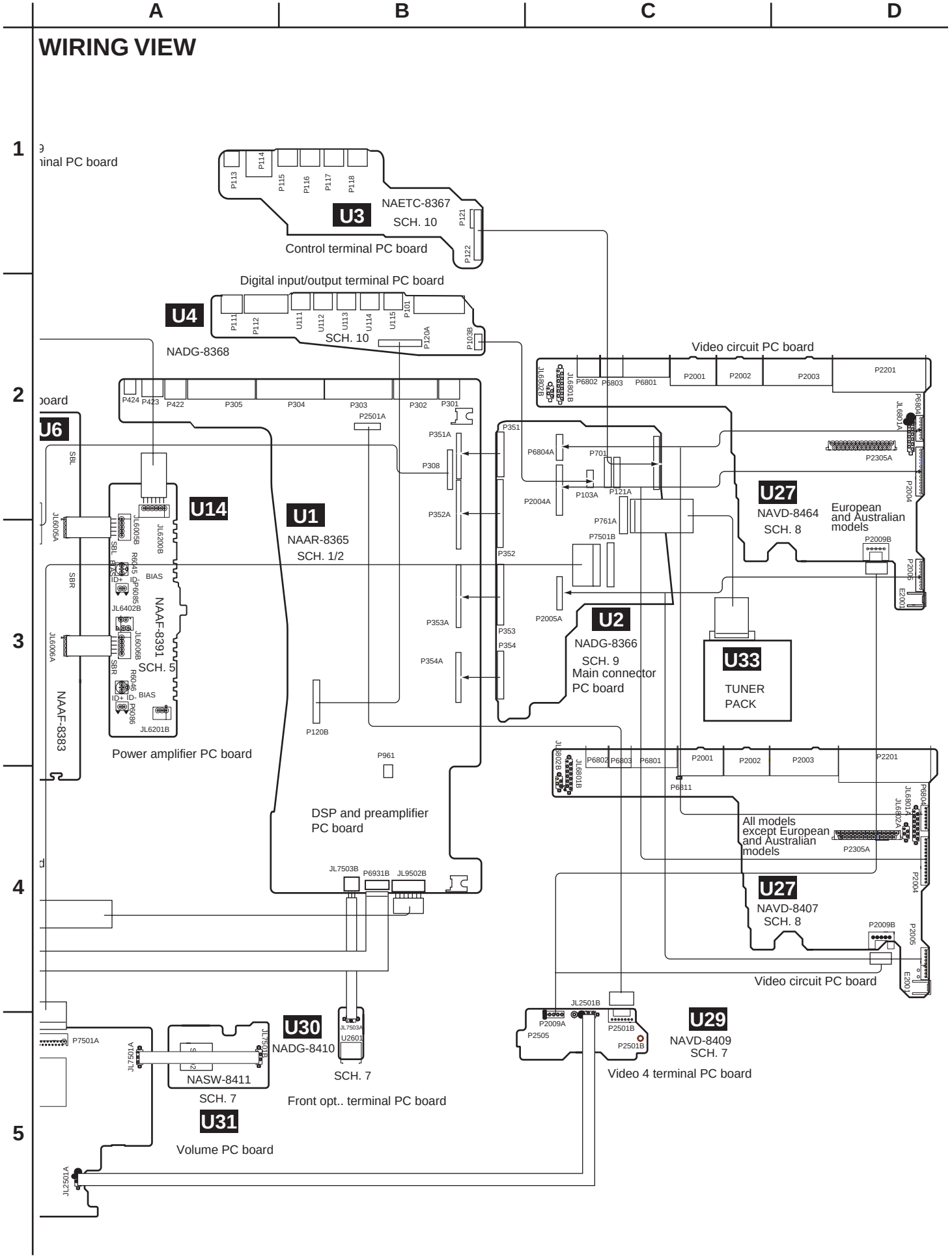
A
B
C
D
1
2
3
4
5
U3
NAETC-8367
SCH. 10
Control terminal PC board
U4
NADG-8368
SCH. 10
Digital input/output terminal PC board
U6
NAAF-8383
U14
NAAF-8391
SCH. 5
Power amplifier PC board
U1
NAAR-8365
SCH. 1/2
DSP and preamplifier PC board
U2
NADG-8366
SCH. 9
Main connector PC board
U33
TUNER PACK
U27
NAVD-8464
SCH. 8
European and Australian models
Video circuit PC board
U27
NAVD-8407
SCH. 8
All models except European and Australian models
Video circuit PC board
U29
NAVD-8409
SCH. 7
Video 4 terminal PC board
U30
NADG-8410
SCH. 7
Front opt.. terminal PC board
U31
NASW-8411
SCH. 7
Volume PC board

A B C D

1 2 3 4 5

PRINTED CIRCUIT BOARD VIEW 1 FROM COMPONENT SIDE

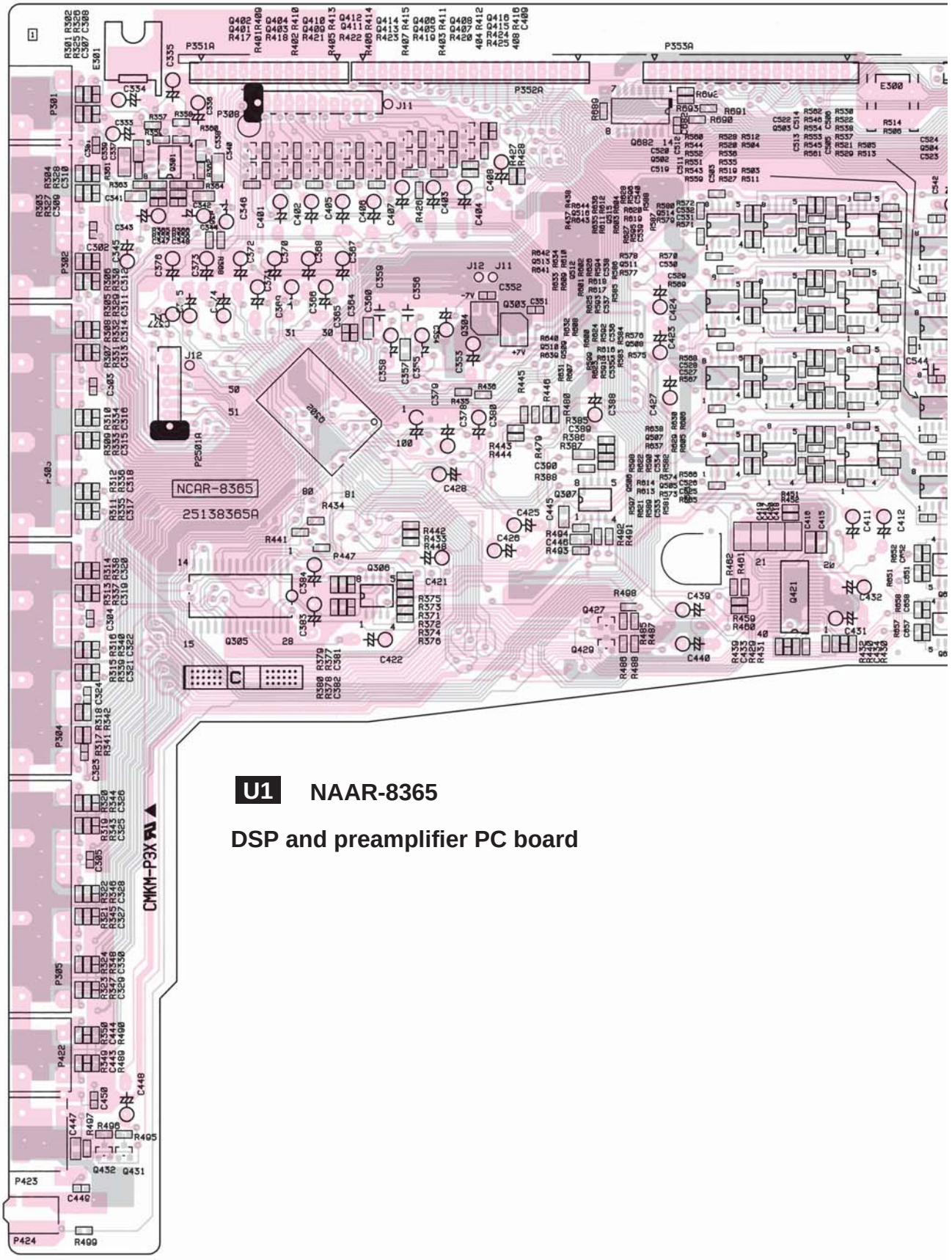

U1 NAAR-8365

DSP and preamplifier PC board

A B C D

1 2 3 4 5

PRINTED CIRCUIT BOARD VIEW 1 FROM COMPONENT SIDE

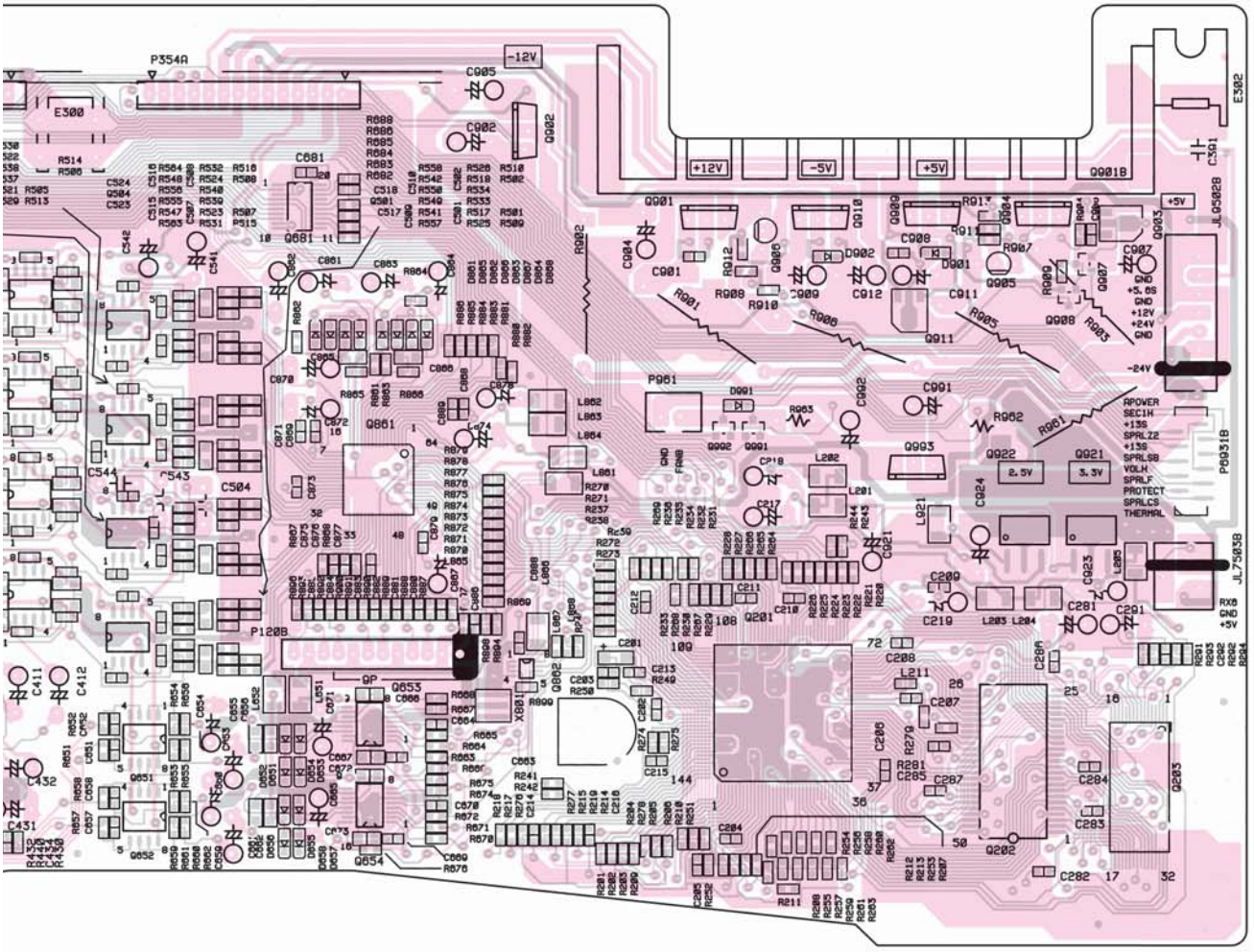

U1 **NAAR-8365**

DSP and preamplifier PC board

A B C D

1 2 3 4 5

PRINTED CIRCUIT BOARD VIEW 2 FROM SOLDERING SIDE

U6

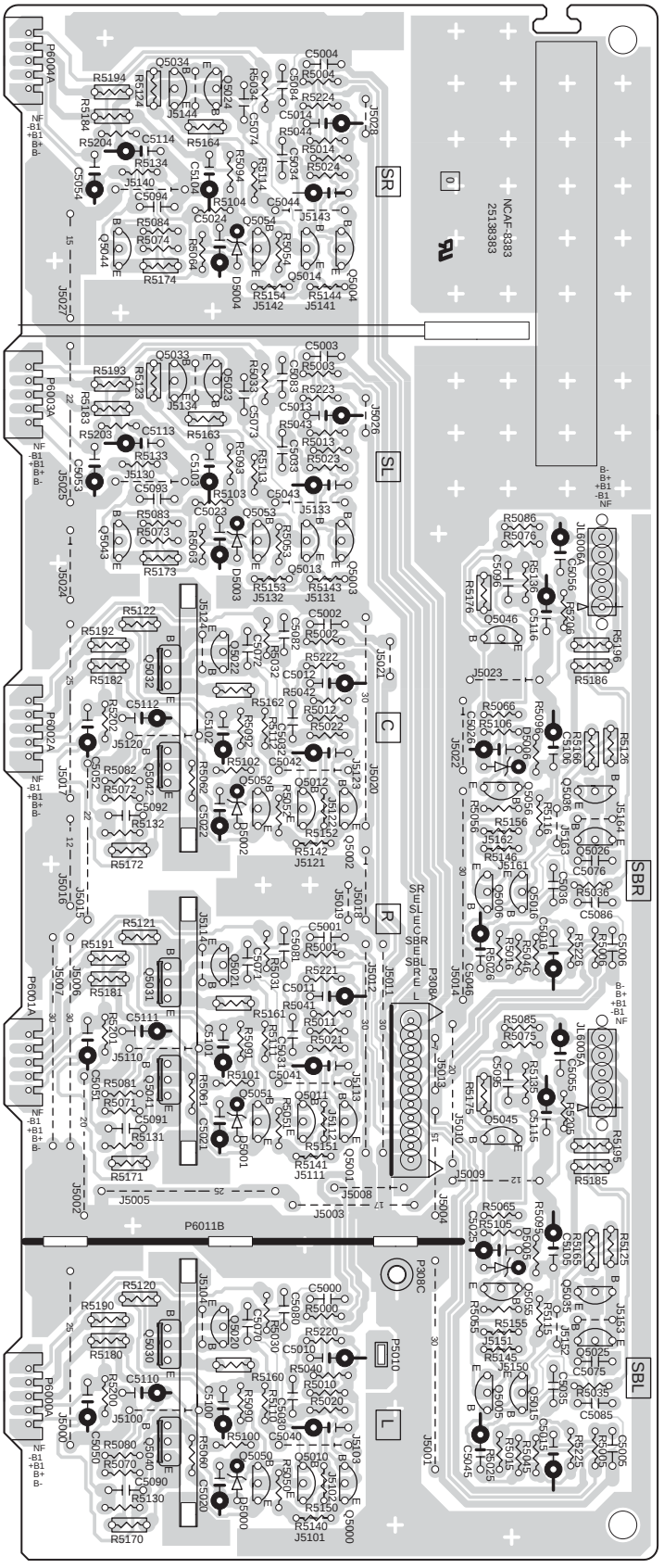

A B C D

1 2 3 4 5

PRINTED CIRCUIT BOARD VIEW 3 FROM SOLDERING SIDE

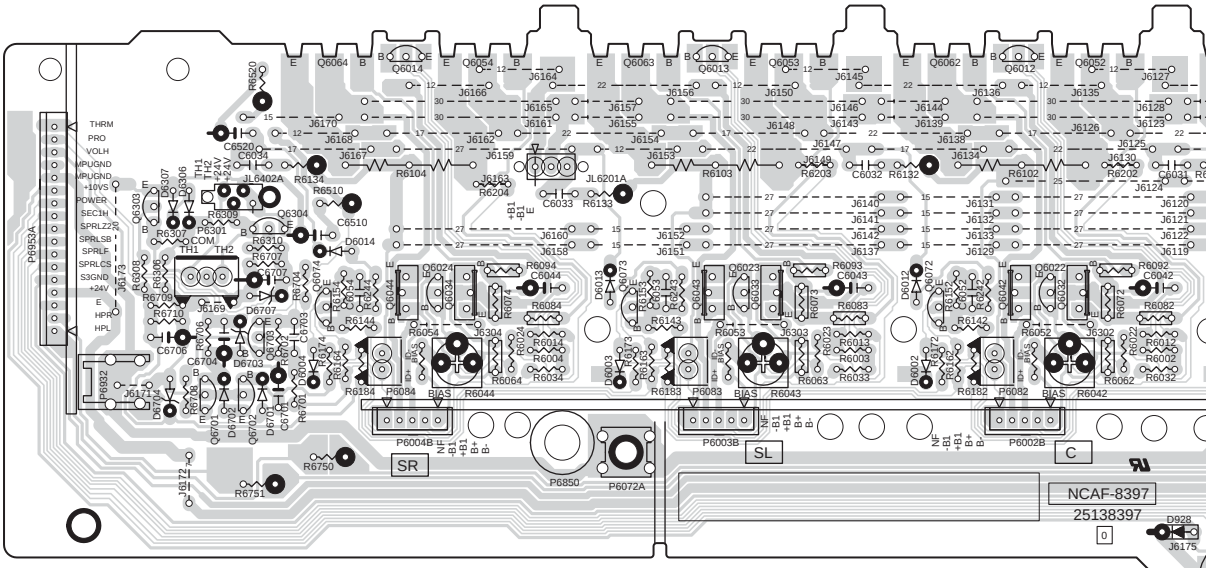

U16 **NAAF-8397**

Power amplifier PC board

A B C D

1 2 3 4 5

PRINTED CIRCUIT BOARD VIEW 3 FROM SOLDERING SIDE

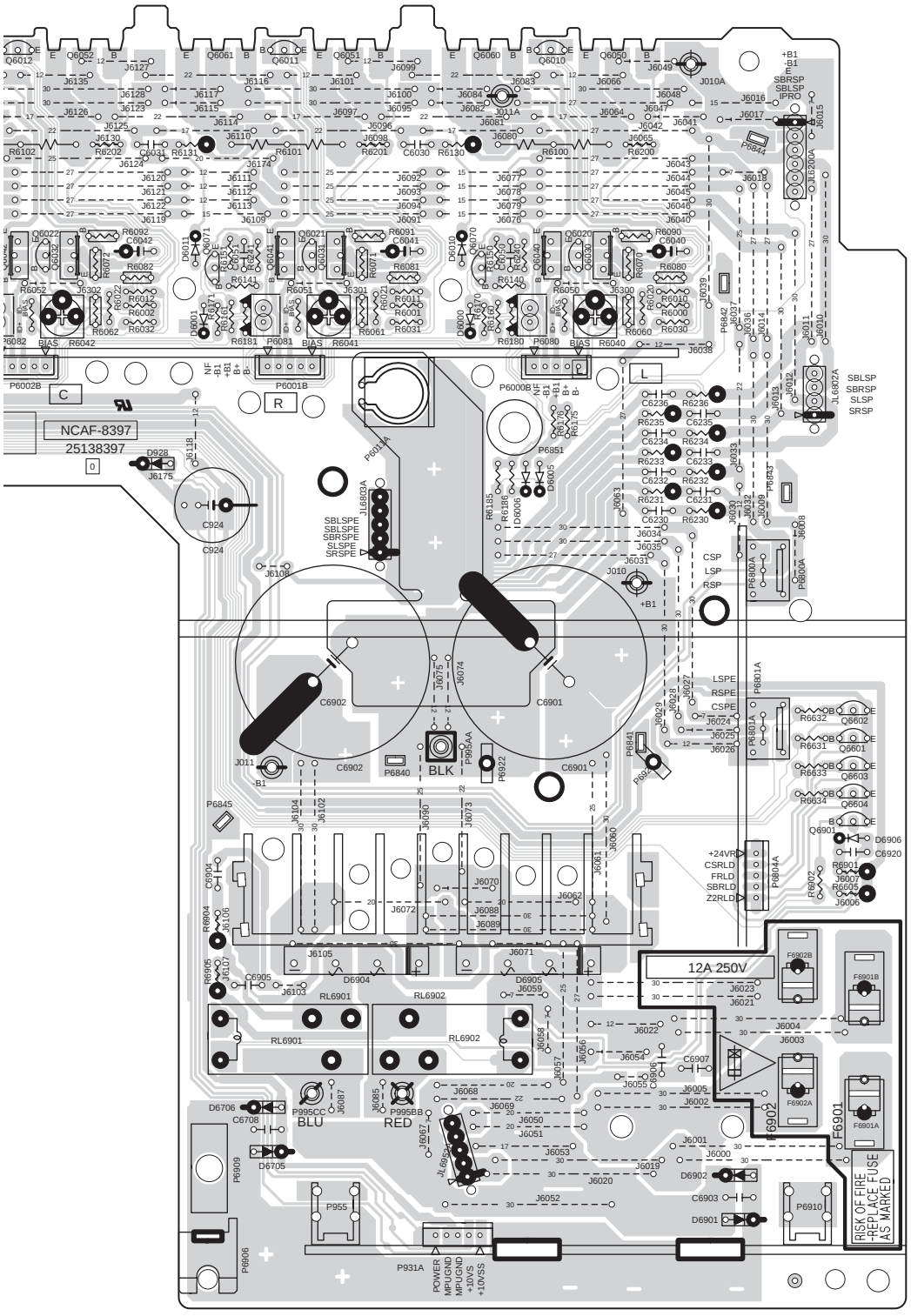

U16 **NAAF-8397**

Power amplifier PC board

A B C D

1

PRINTED CIRCUIT BOARD VIEW 4 FROM SOLDERING SIDE

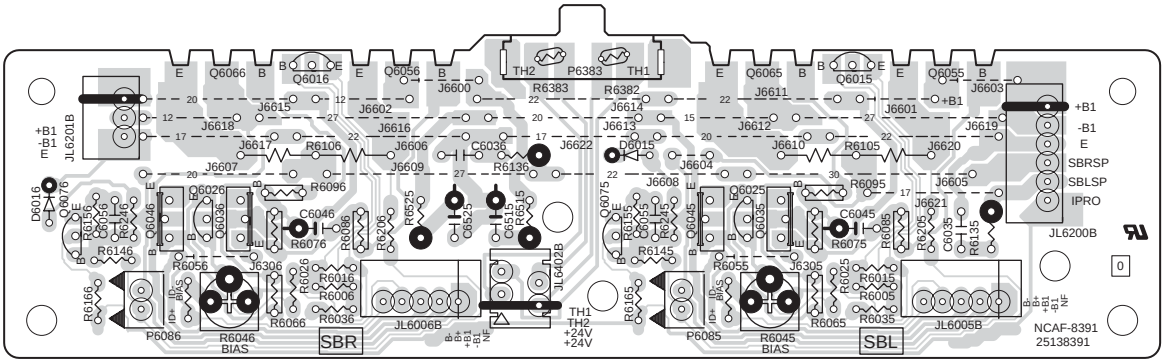

2

U14 **NAAF-8391**

Power amplifier PC board

3

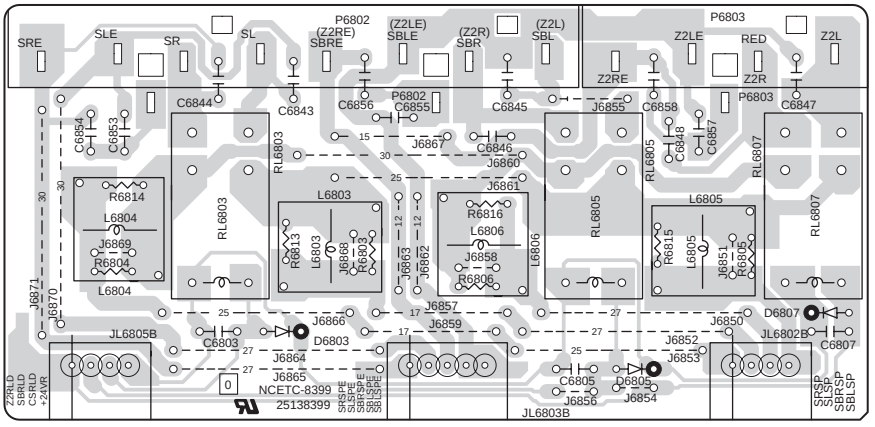

4

U18 **NAETC-8399**

Speaker terminal PC board

5

A B C D

1 2 3 4 5

PRINTED CIRCUIT BOARD VIEW 4 FROM SOLDERING SIDE

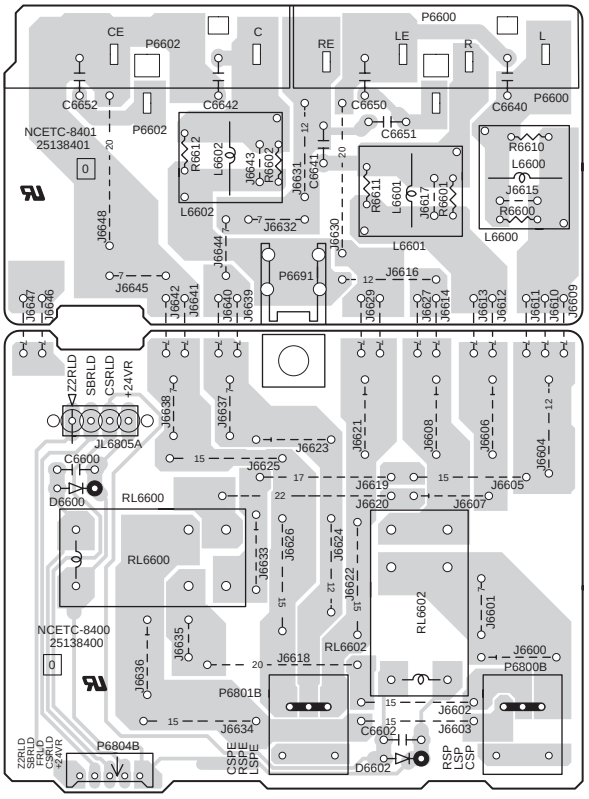

U19 **NAETC-8400**

Speaker terminal
F/C PC board

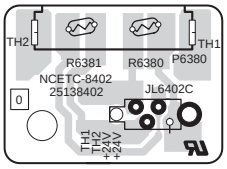

U21 **NAETC-8402**

Thermal detector PC board

A B C D

1 2 3 4 5

PRINTED CIRCUIT BOARD VIEW 5 FROM SOLDERING SIDE

U5

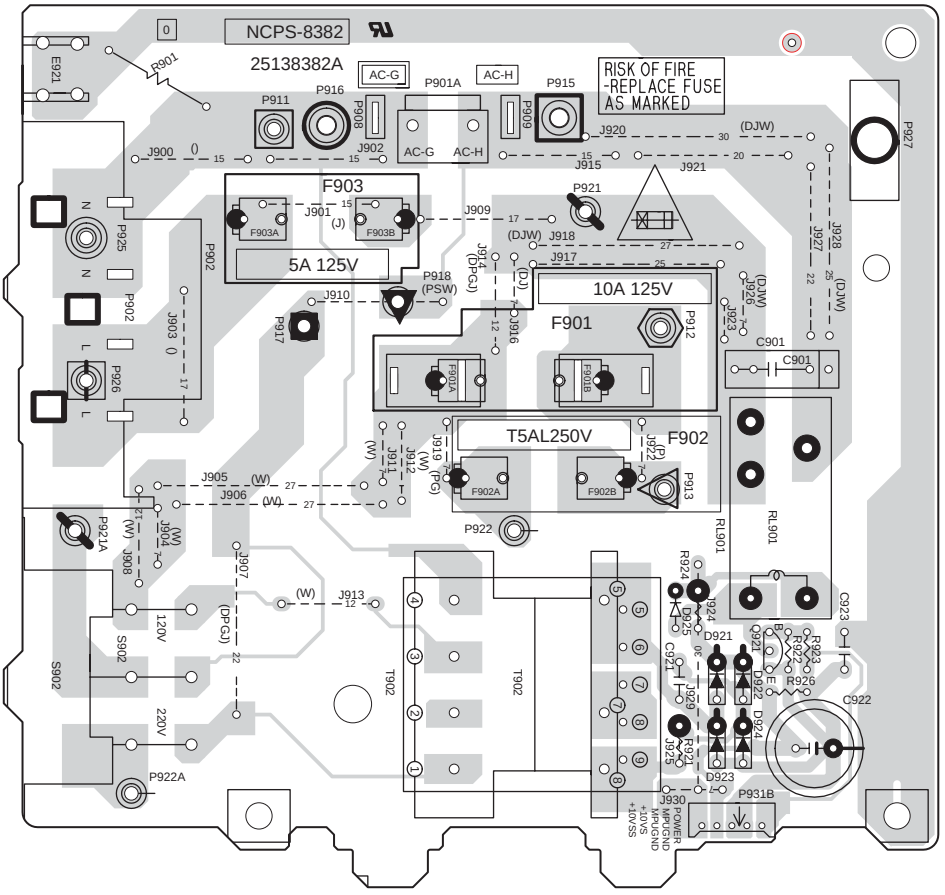

NAPS-8382 **Primary circuit PC board**

U8

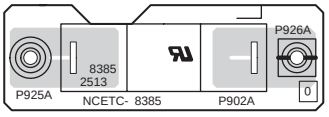

NAETC-8385
AC outlet PC board
Korean model only

U10

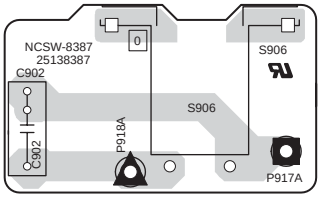

NASW-8387
Power switch PC board
All models except 120V and Australian models

A B C D

1 2 3 4 5

PRINTED CIRCUIT BOARD VIEW 5 FROM SOLDERING SIDE

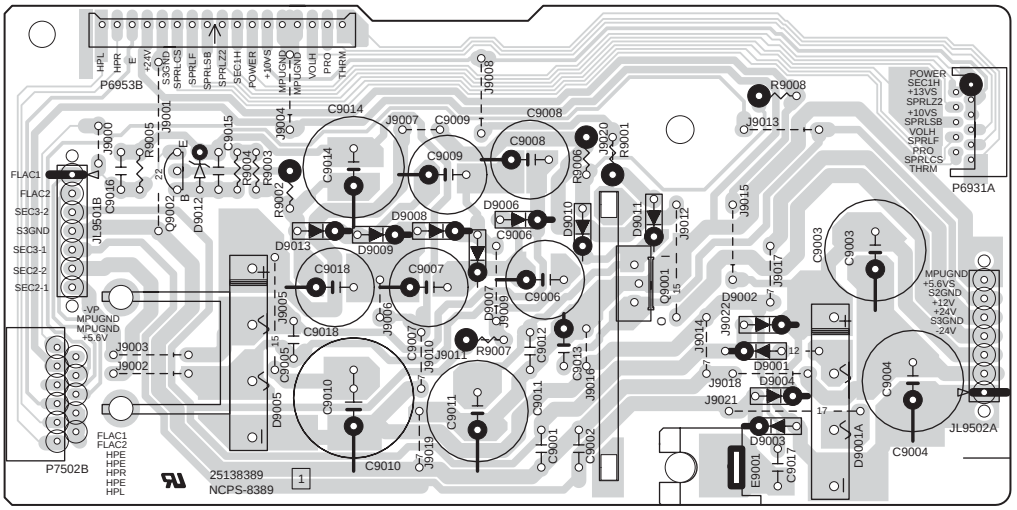

U12 **NAPS-8389**

Secondary circuit PC board

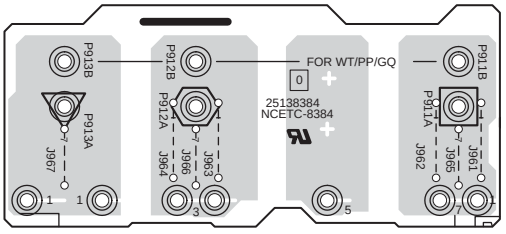

U7 **NAETC-8384**

Transformer terminal PC board

U13

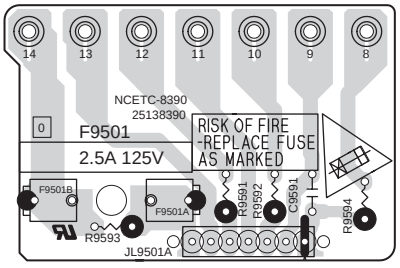

NAETC-8390

Fuse terminal PC board

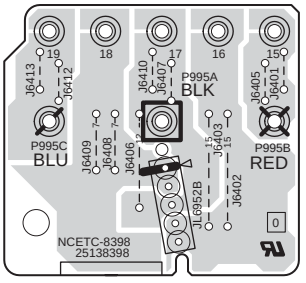

U17

NAETC-8398

Secondary circuit PC board

A B C D

1 2 3 4 5

PRINTED CIRCUIT BOARD VIEW 6

Side A

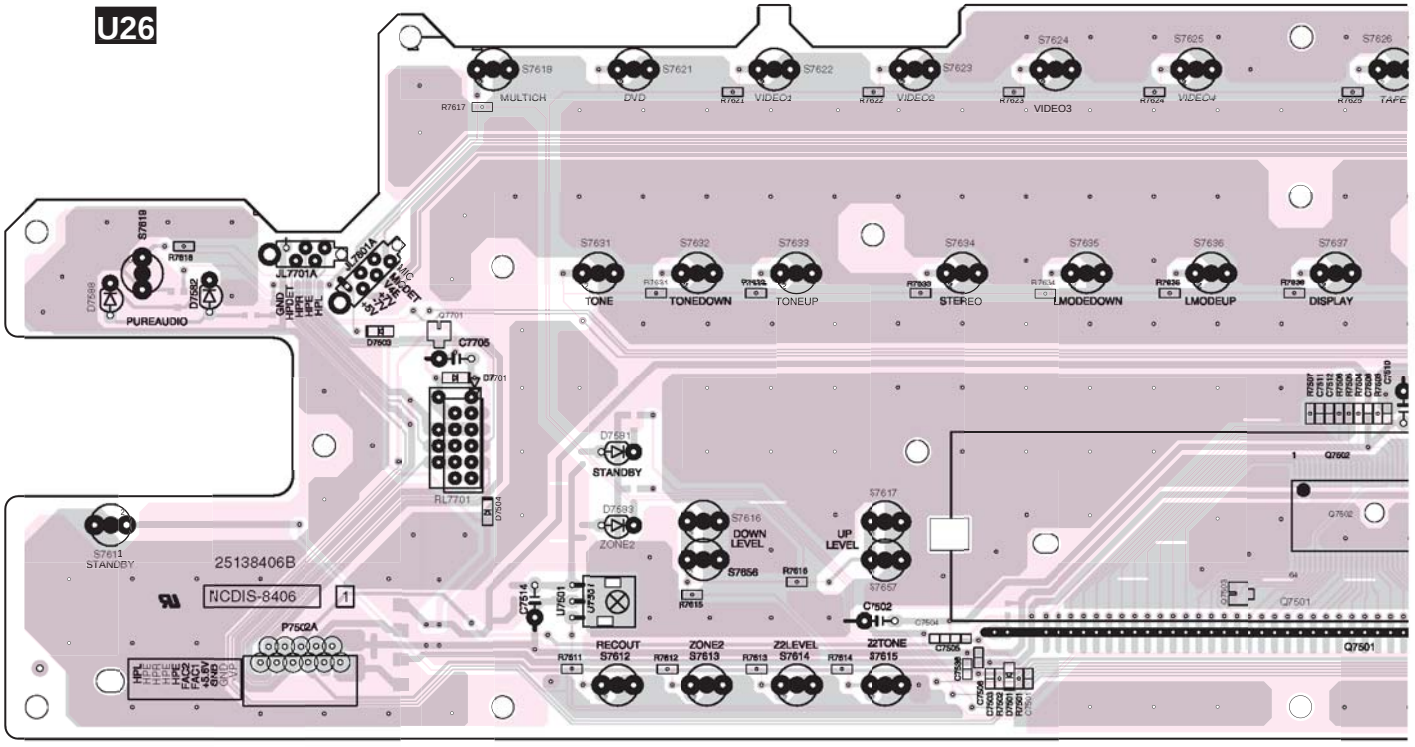

Side B

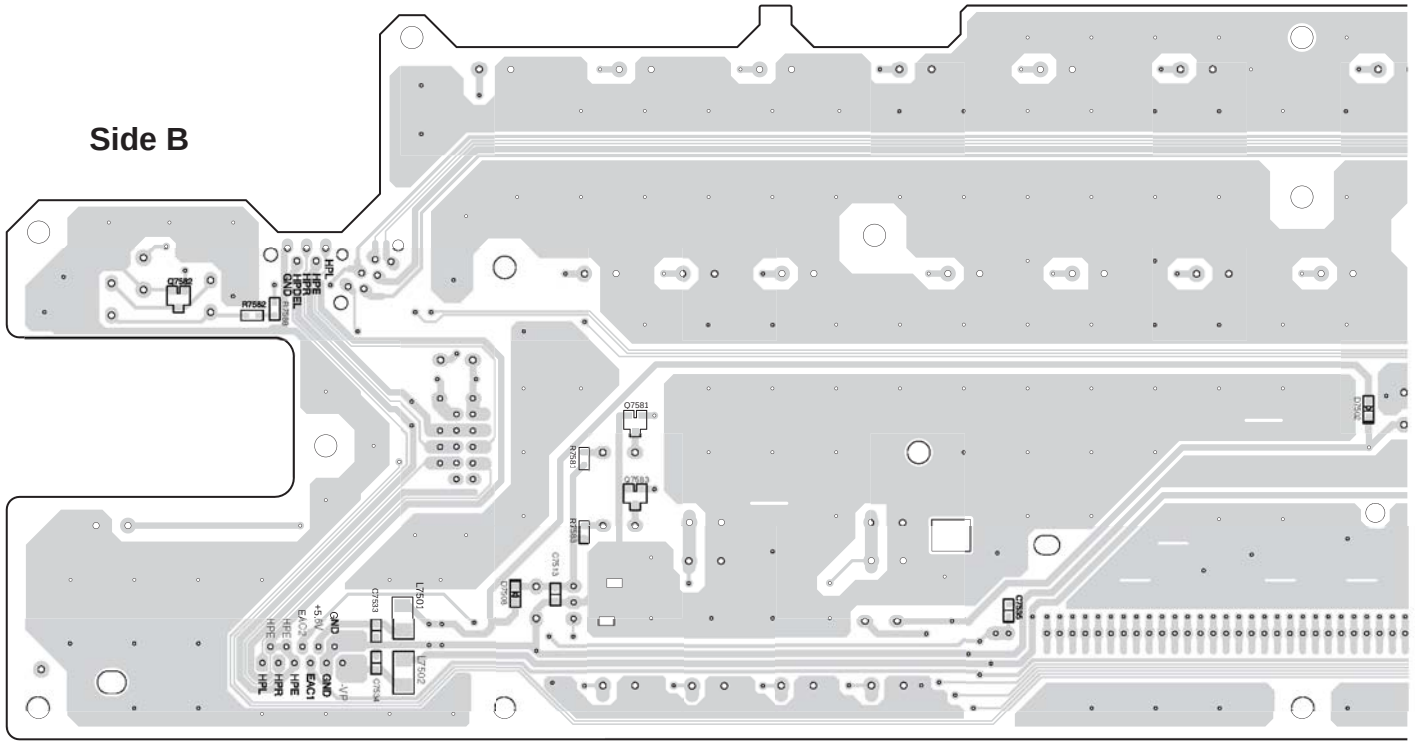

NADIS-8406

Display circuit PC board

A B C D

1 2 3 4 5

PRINTED CIRCUIT BOARD VIEW 6

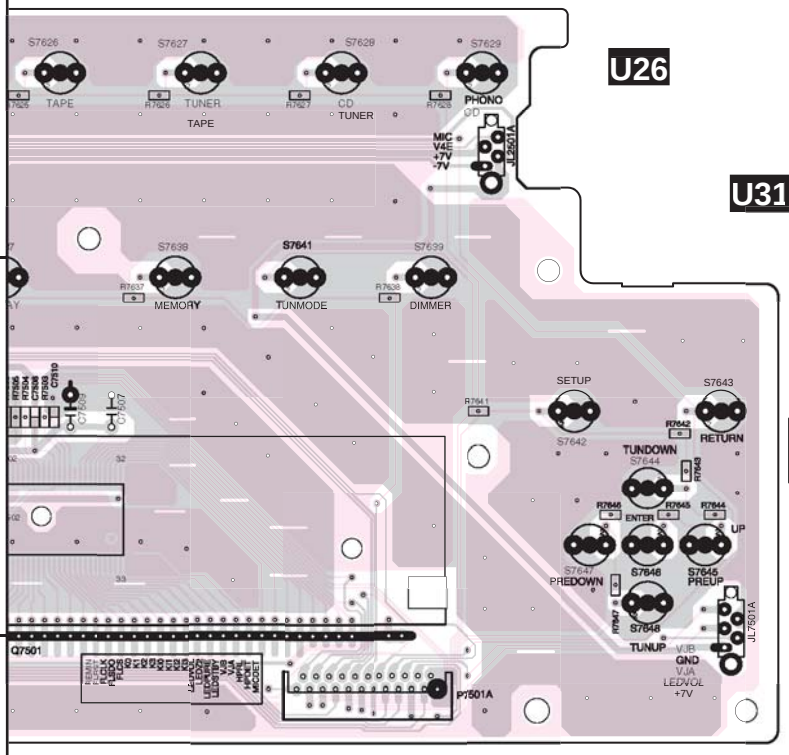

Side A

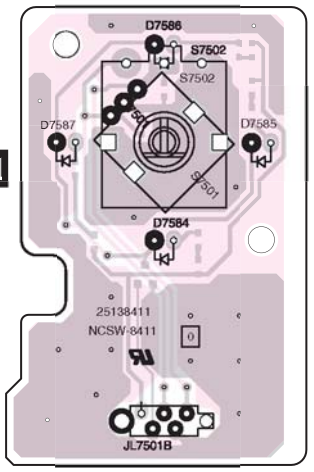

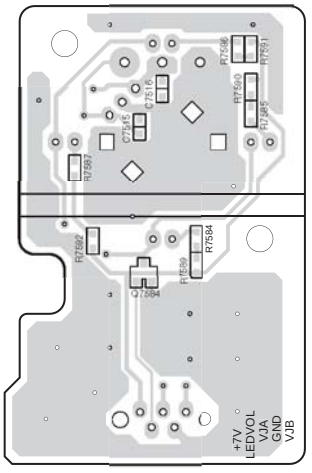

NASW-8411 Side B

Volume PC board

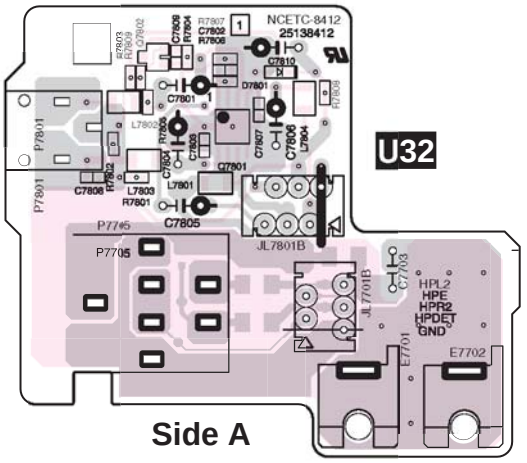

Side A

Side B

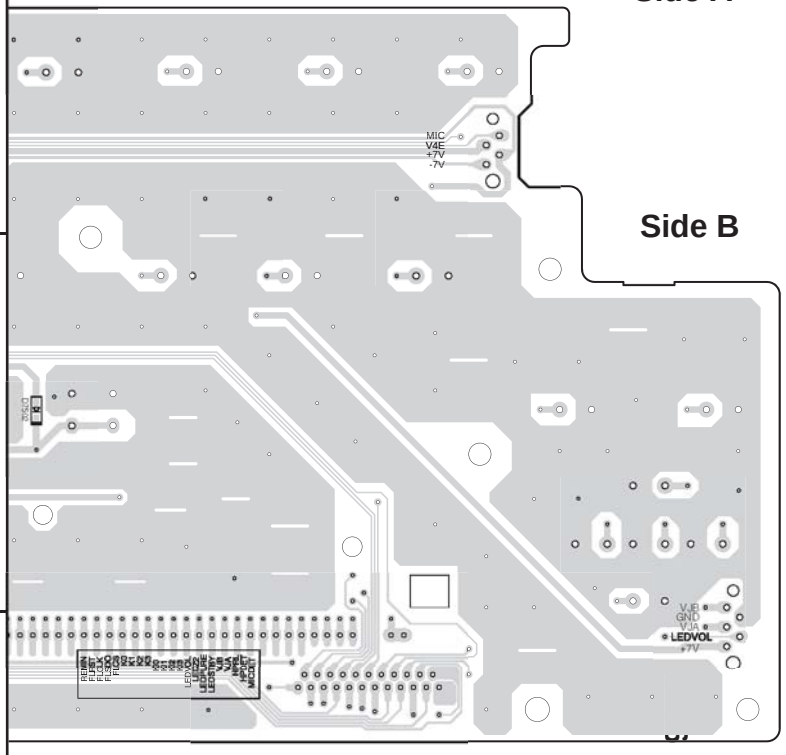

NADIS-8406

Display circuit PC board

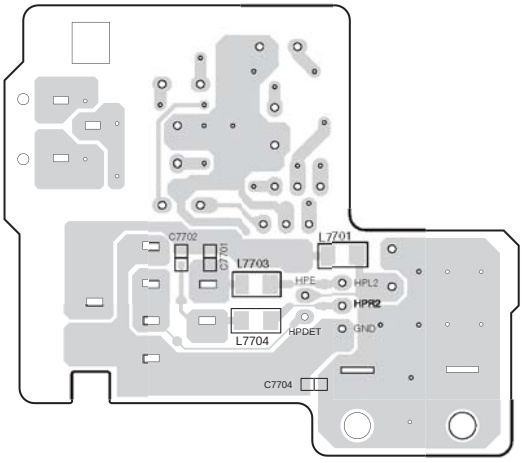

NAETC-8412

Headphone terminal PC board

A B C D

1 2 3 4 5

PRINTED CIRCUIT BOARD VIEW 7

U29

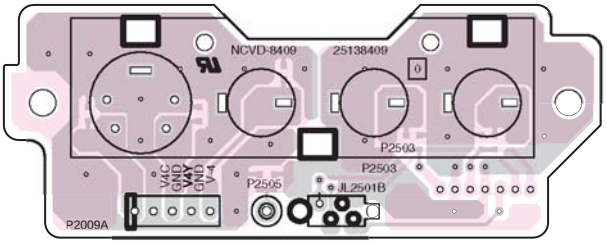

Side A

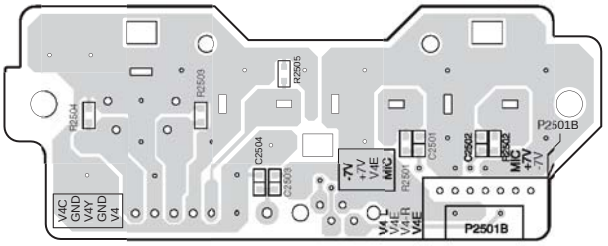

Side B

NAVD-8409
Video 4 terminal PC board

U30

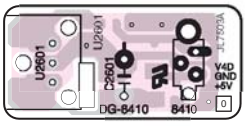

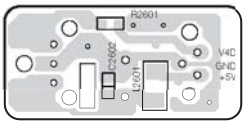

Side A

NADG-8410
Front optical terminal PC board

Side B

A B C D

1 2 3 4 5

PRINTED CIRCUIT BOARD VIEW 7

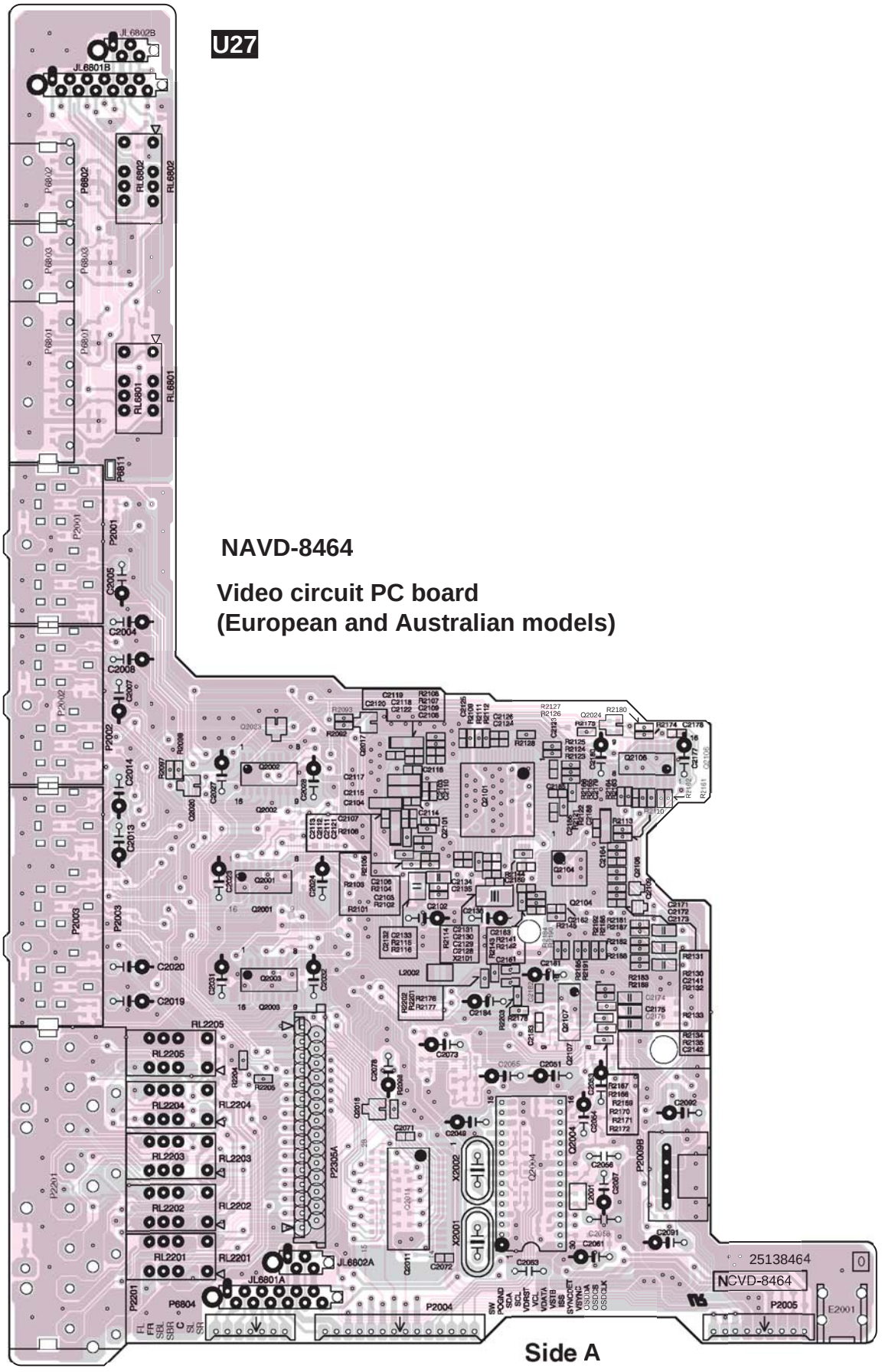

PRINTED CIRCUIT BOARD VIEW 7

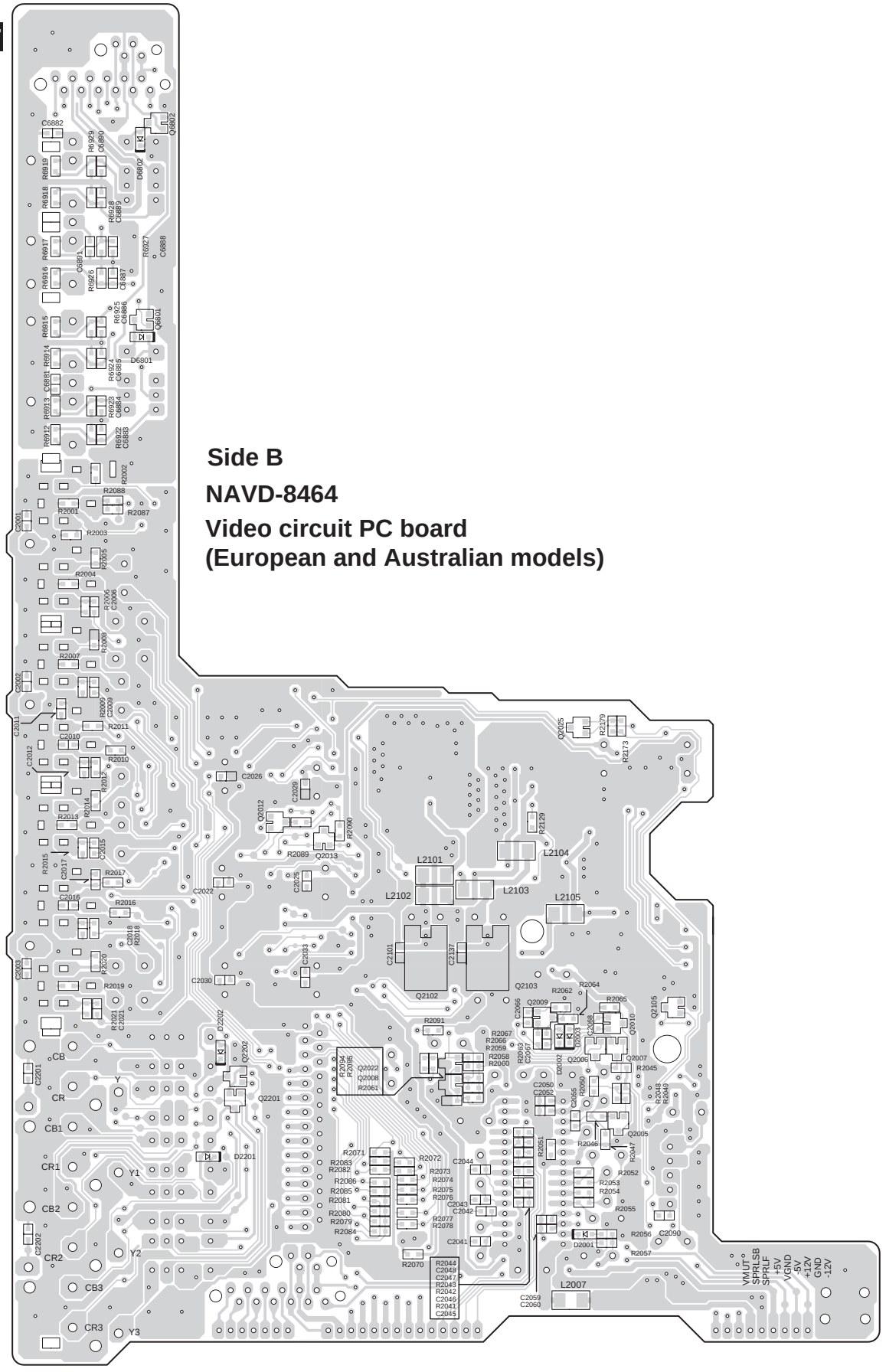

A B C D

1 2 3 4 5

PRINTED CIRCUIT BOARD VIEW 8
All models except European and Australian models

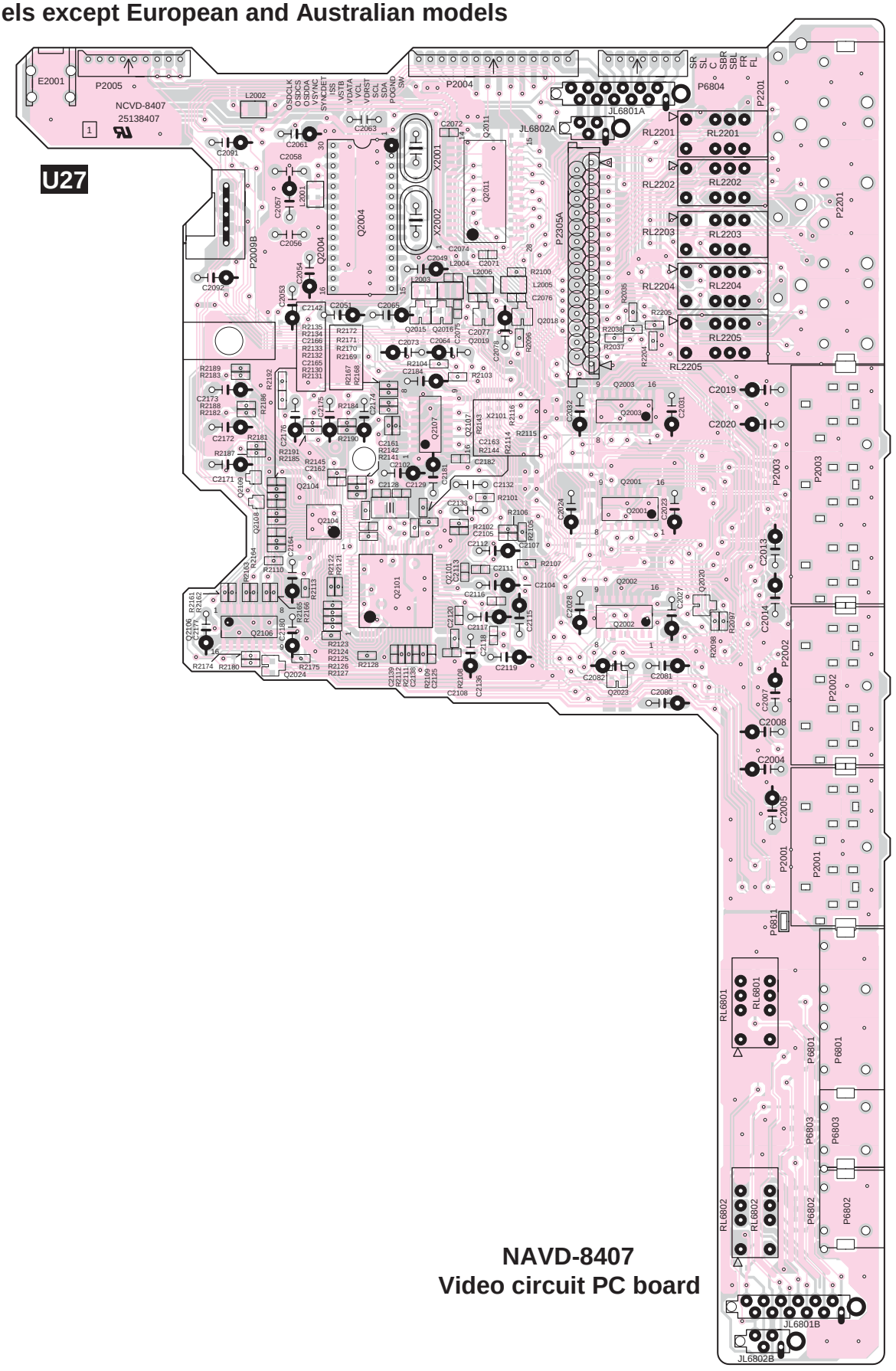

NAVD-8407
Video circuit PC board

Side A

A B C D

1 2 3 4 5

PRINTED CIRCUIT BOARD VIEW 8

All models except European and Australian models

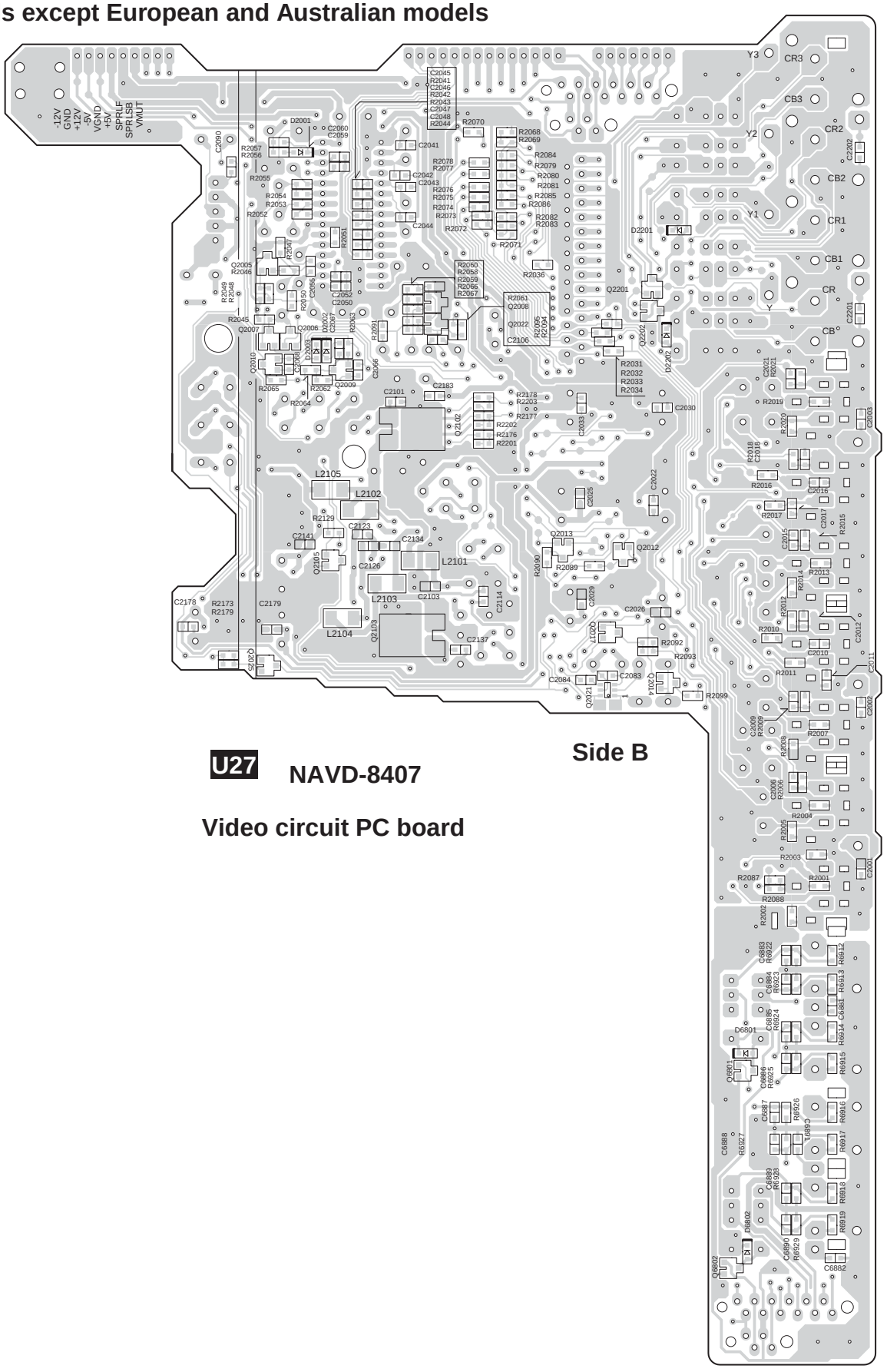

U27 **NAVD-8407**

Video circuit PC board

Side B

A B C D

1 2 3 4 5

PRINTED CIRCUIT BOARD VIEW 9 FROM COMPONENT SIDE

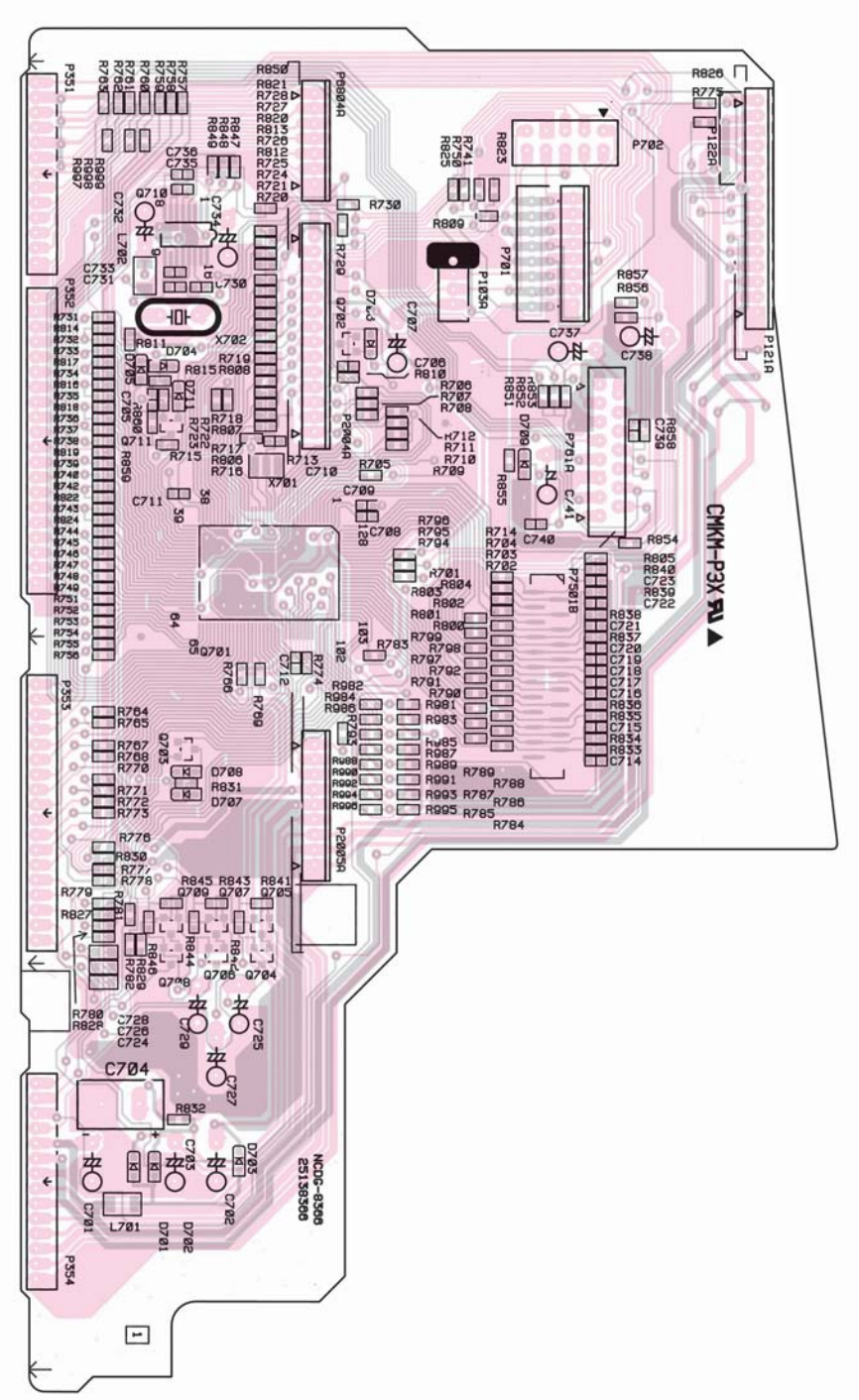

U2 **NADG-8366**

Main connector
PC board

A B C D

1 2 3 4 5

PRINTED CIRCUIT BOARD VIEW 9 FROM COMPONENT SIDE

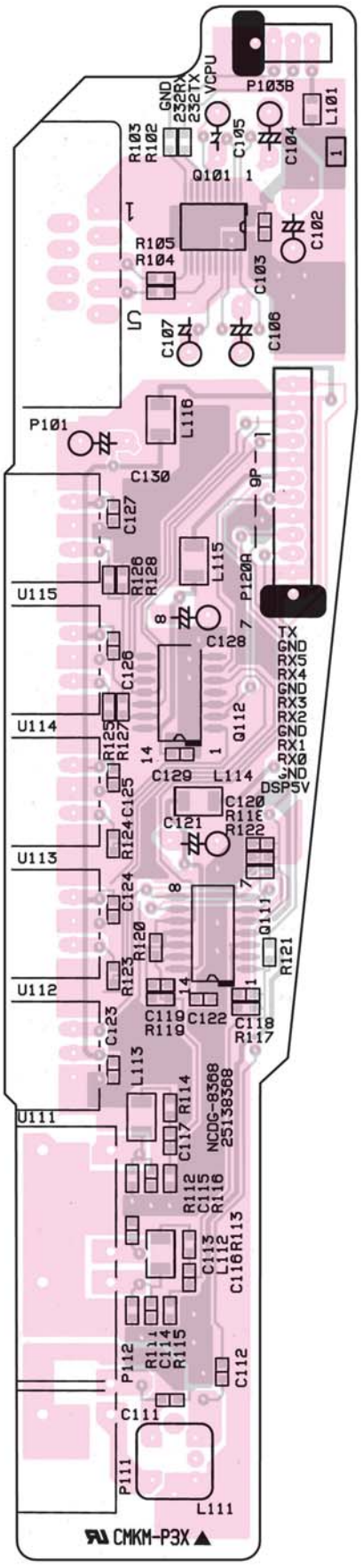

U4 NADG-8368

Digital input/output terminal PC board

A B C D

1 2 3 4 5

PRINTED CIRCUIT BOARD VIEW 9 FROM COMPONENT SIDE

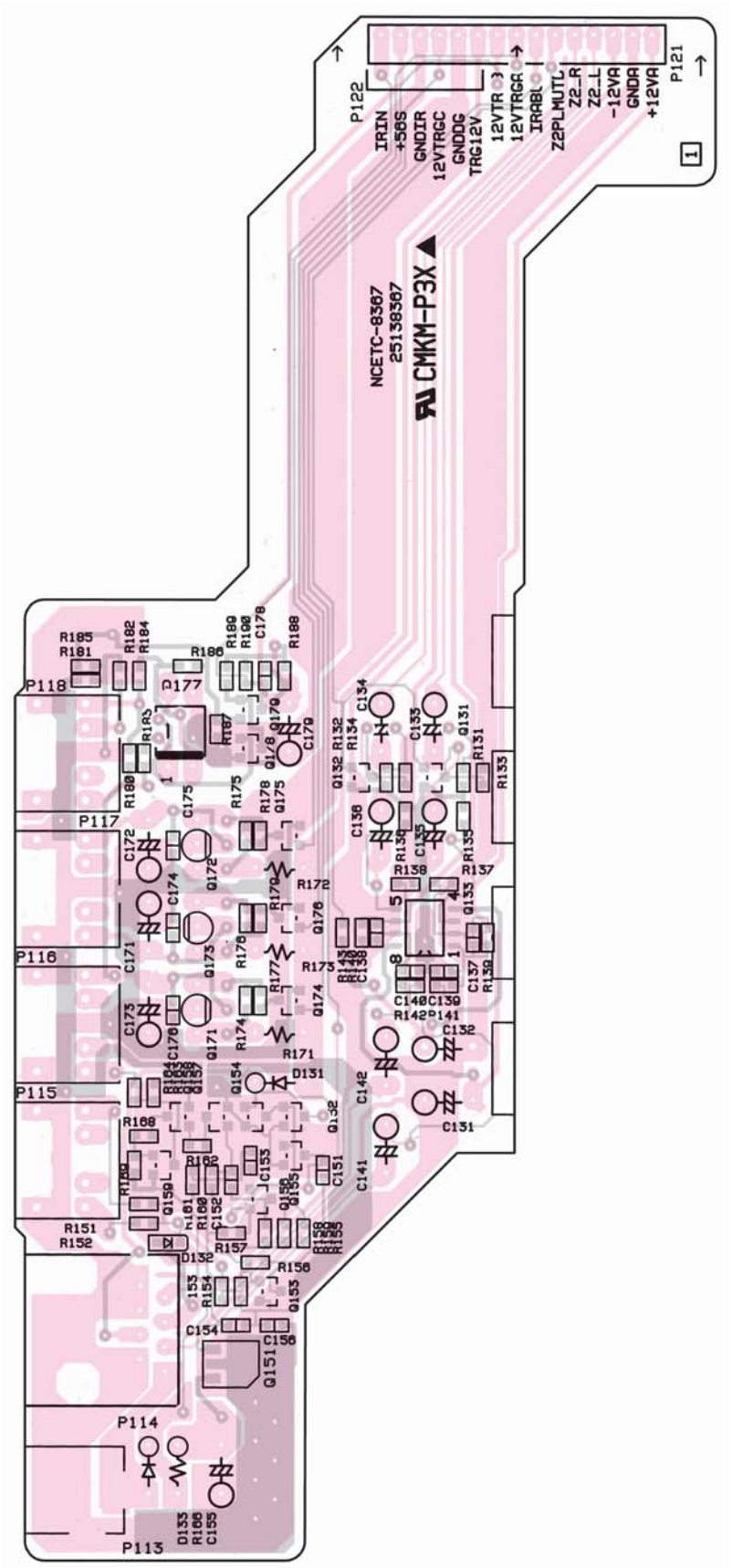

U3

NAETC-8367
Control terminal PC board

IC BLOCK DIAGRAMS AND DESCRIPTIONS

ADV7172KSTZ(Digital PAL/NTSC Vidoe Encoder with Six DACs)

FUNCTIONAL BLOCK DIAGRAM

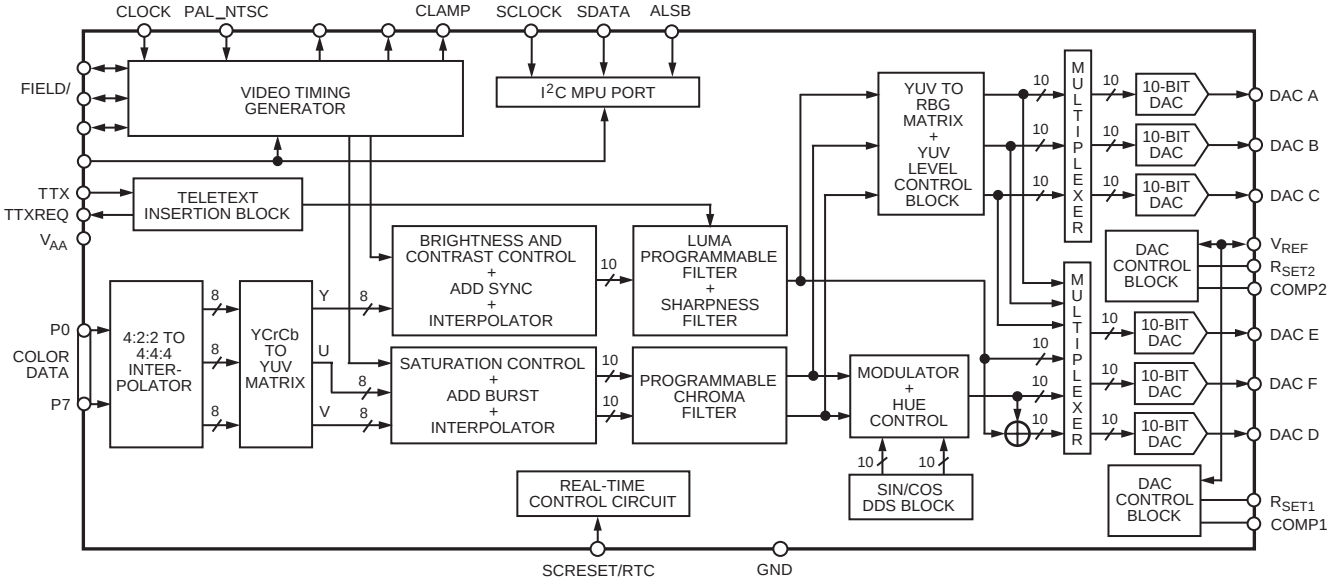

PIN CONFIGURATION

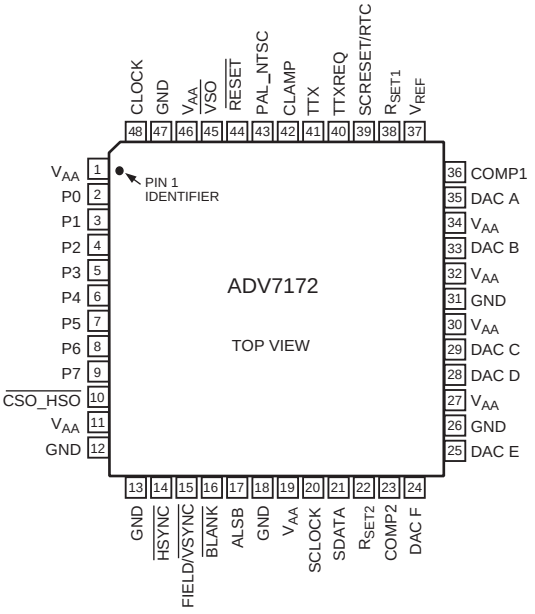

IC BLOCK DIAGRAMS AND DESCRIPTIONS

ADV7172KSTZ(Digital PAL/NTSC Vidoe Encoder with Six DACs)

PIN FUNCTION DESCRIPTION

Mnemonic	Input/Output	Function
P7–P0	I	8-Bit 4:2:2 Multiplexed YCrCb Pixel Port (P7ÐP0) P0 represents the LSB.
CLOCK	I	TTL Clock Input. Requires a stable 27 MHz reference clock for standard operation. Alternatively, a 24.5454 MHz (NTSC) or 29.5 MHz (PAL) can be used for square pixel operation.
$\overline{\text{HSYNC}}$	I/O	$\overline{\text{HSYNC}}$ (Modes 1 and 2) Control Signal. This pin may be configured to output (Master Mode) or as an input and accept (Slave Mode) Sync signals.
FIELD/$\overline{\text{VSYNC}}$	I/O	Dual Function FIELD (Mode 1) and $\overline{\text{VSYNC}}$ (Mode 2) Control Signal. This pin may be configured to output (Master Mode) or as an input (Slave Mode) and accept these control signals.
$\overline{\text{BLANK}}$	I/O	Video Blanking Control Signal. The pixel inputs are ignored when this is Logic Level "0." This signal is optional.
SCRESET/RTC	I	This pin can be configured as an input by setting MR42 and MR41 of Mode Register 4. It can be configured as a subcarrier reset pin, in which case a low-to-high transition on this pin will reset the subcarrier phase to Field 0. Alternatively it may be configured as a Real-Time Control (RTC) Input.
V_{REF}	I/O	Voltage Reference Input for DACs or Voltage Reference Output (1.235 V).
R_{SET1}	I	A 150 resistor connected from this pin to GND is used to control full-scale amplitudes of the Video Signals from DACs A, B, and C (the "large" DACs).
R_{SET2}	I	A 600 resistor connected from this pin to GND is used to control full-scale amplitudes of the Video Signals from DACs D, E, and F (the "small" DACs).
COMP1	O	Compensation Pin for DACs A, B, and C. Connect a 0.1 uF Capacitor from COMP to V_{AA}. For Optimum Dynamic Performance in Low Power Mode, the value of the COMP1 capacitor can be lowered to as low as 2.2 nF.
COMP2	O	Compensation Pin for DACs D, E, and F. Co nnect a 0.1 uF Capacitor from COMP to V_{AA}.
DAC A	O	GREEN/Composite/Y Analog Output. This DAC is capable of providing 34.66 mA output.
DAC B	O	BLUE/S-Video Y/U Analog Output. This DAC is capable of providing 34.66 mA output.
DAC C	O	RED/S-Video C/V Analog Output. This DAC is capable of providing 34.66 mA output.
DAC D	O	GREEN/Composite/Y Analog Output. This DAC is capable of providing 8.66 mA output.
DAC E	O	BLUE/S-Video Y/U Analog Output. This DAC is capable of providing 8.66 mA output.
DAC F	O	RED/S-Video C/V Analog Output. This DAC is capable of providing 8.66 mA output.
SCLOCK	I	MPU Port Serial Interface Clock Input.
SDATA	I/O	MPU Port Serial Data Input/Output.
CLAMP	O	TTL Output Signal to external circuitry to enable clamping of all video signals.
PAL_NTSC	I	Input signal to select PAL or NTSC mode of operation, pin set to Logic "1" selects PAL.
$\overline{\text{VSO}}$	O	$\overline{\text{VSO}}$ TTL Output Sync Signal.
CSO_$\overline{\text{HSO}}$	O	Dual Function $\overline{\text{CSO}}$ or $\overline{\text{HSO}}$ TTL Output Sync Signal.
ALSB	I	TTL Address Input. This signal sets up the LSB of the MPU address.
$\overline{\text{RESET}}$	I	The input resets the on-chip timing generator and sets the ADV7172/ADV7173 into default mode. This is NTSC operation, Timing Slave Mode 0, DACs A, B, and C powered OFF, DACs D, E, and F powered ON, Composite and S-Video out.
TTX	I	Teletext Data Input Pin.
TTXREQ	O	Teletext Data Request output signal used to control teletext data transfer.
V_{AA}	P	Power Supply (3 V to 5 V).
GND	G	Ground Pin.

IC BLOCK DIAGRAMS AND DESCRIPTIONS

ADV7183AKST(Multiformat SDTV Video Decoder)

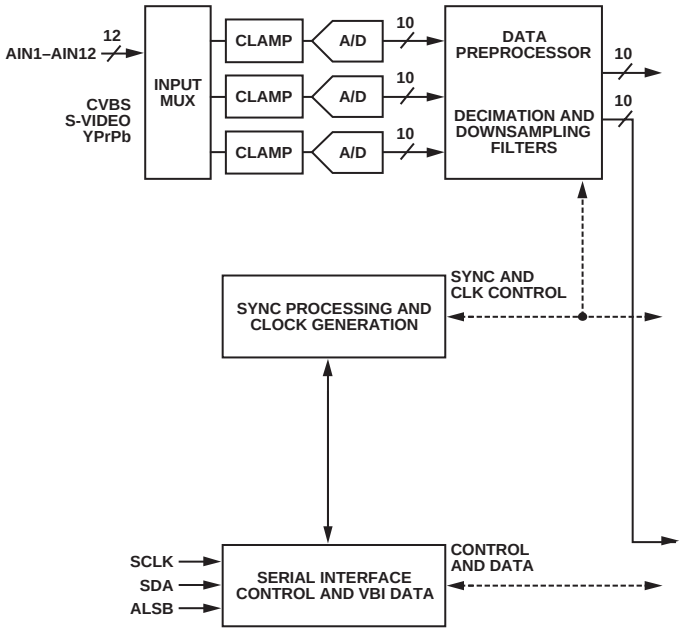

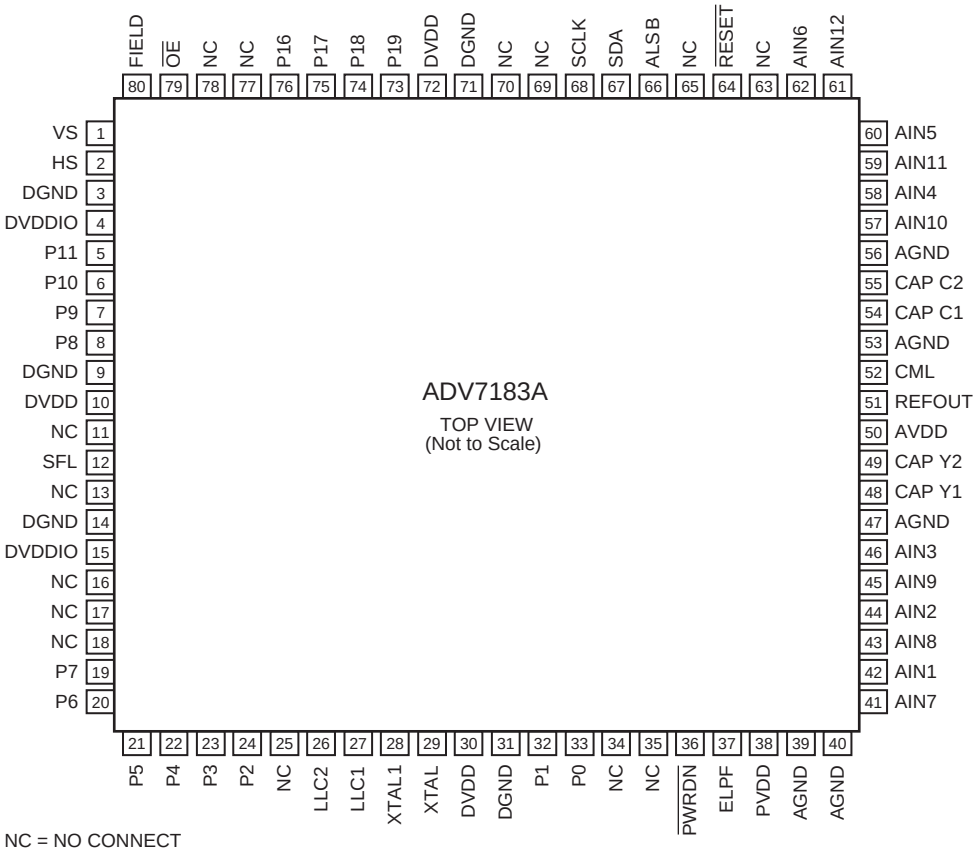

NC = NO CONNECT

80-lead LQFP pin configulation

IC BLOCK DIAGRAMS AND DESCRIPTIONS

ADV7183AKST(Multiformat SDTV Video Decoder)

Pin Function Descriptions

Pin No.	Mnemonic	Type	Function
3, 9, 14, 31, 71	DGND	G	Digital Ground.
39, 40, 47, 53, 56	AGND	G	Analog Ground.
4, 15	DVDDIO	P	Digital I/O Supply Voltage (3.3 V)
10, 30, 72	DVDD	P	Digital Core Supply Voltage (1.8 V).
50	AVDD	P	Analog Supply Voltage (3.3 V).
38	PVDD	P	PLL Supply Voltage (1.8 V).
41…46, 57…62	AIN1…AIN12	I	Analog Video Input Channels.
11, 13, 16…18, 25, 34, 35, 63, 65, 69, 70, 77, 78	NC		No Connect Pins.
5…8, 19…24, 32, 33, 73…76	P0…P15	O	Video Pixel Output Port.
2	HS	O	HS is a horizontal synchronization output signal.
1	VS	O	VS is a vertical synchronization output signal.
80	FIELD	O	FIELD is a field synchronization output signal.
67	SDA	I/O	I^2C Port Serial Data Input/Output Pin.
68	SCLK	I	I^2C Port Serial Clock Input (Max Clock Rate of 400 kHz).
66	ALSB	I	This pin selects the I^2C address for the ADV7183A. ALSB set to Logic 0 sets the address for a write as 0x40; for ALSB set to logic high, the address selected is 0x42.
64	$\overline{\text{RESET}}$	I	System Reset Input, Active Low. A minimum low reset pulse width of 5 ms is required to reset the ADV7183A circuitry.
27	LLC1	O	This is a line- locked output clock for the pixel data output by the ADV7183A. Nominally 27 MHz, but varies up or down according to video line length.
26	LLC2	O	This is a divide-by-2 version of the LLC1 output clock for the pixel data output by the ADV7183A. Nominally 13.5 MHz, but varies up or down according to video line length.
29	XTAL	I	This is the input pin for the 27 MHz crystal, or can be overdriven by an external 3.3 V, 27 MHz clock oscillator source. In crystal mode,the crystal must be a fundamental crystal.
28	XTAL1	O	This pin should be connected to the 27 MHz crystal or left as a no connect if an external 3.3 V, 27 MHz clock oscillator source is used to clock the ADV7183A. In crystal mode, the crystal must be a fundamental crystal.
36	$\overline{\text{PWRDN}}$	I	A logic low on this pin places the ADV7183A in a power-down mode. Refer to the I2C Control Register Map for more options on power-down modes for the ADV7183A.
79	$\overline{\text{OE}}$	I	When set to a logic low, $\overline{\text{OE}}$ enables the pixel output bus, P15…P0 of the ADV7183A. A logic high on the $\overline{\text{OE}}$ pin places Pins P15..P0, HS, VS, SE/SYNC_OUT into a high impedance state.
37	ELPF	I	The recommended external loop filter must be connected to this ELPF pin, as shown in Figure 42.
12	SFL	O	Subcarrier Frequency Lock. This pin contain a sesrial output stream that can be used to lock the subcarrier frequency when this decoder is connected to any Analog Devices, Inc. digital video encoder.
51	REFOUT	O	Internal Voltage Reference Output. Refer to Figure 42 for a recommended capacitor network for this pin.
52	CML	O	The CML pin is a common-mode level for the internal ADCs. Refer to Figure 42 for a recommended capacitor network for this pin.
48, 49	CAPY1, CAPY2	I	ADC s Capacitor Network. Refer to Figure 42 fora recommended capacitor network for this pin.
54, 55	CAPC1, CAPC2	I	ADC s Capacitor Network. Refer to Figure 42 for a recommended capacitor network for this pin.

IC BLOCK DIAGRAMS AND TERMINAL DESCRIPTIONS

BU1924FS (RDS Decoder) <European model only>

BLOCK DIAGRAM

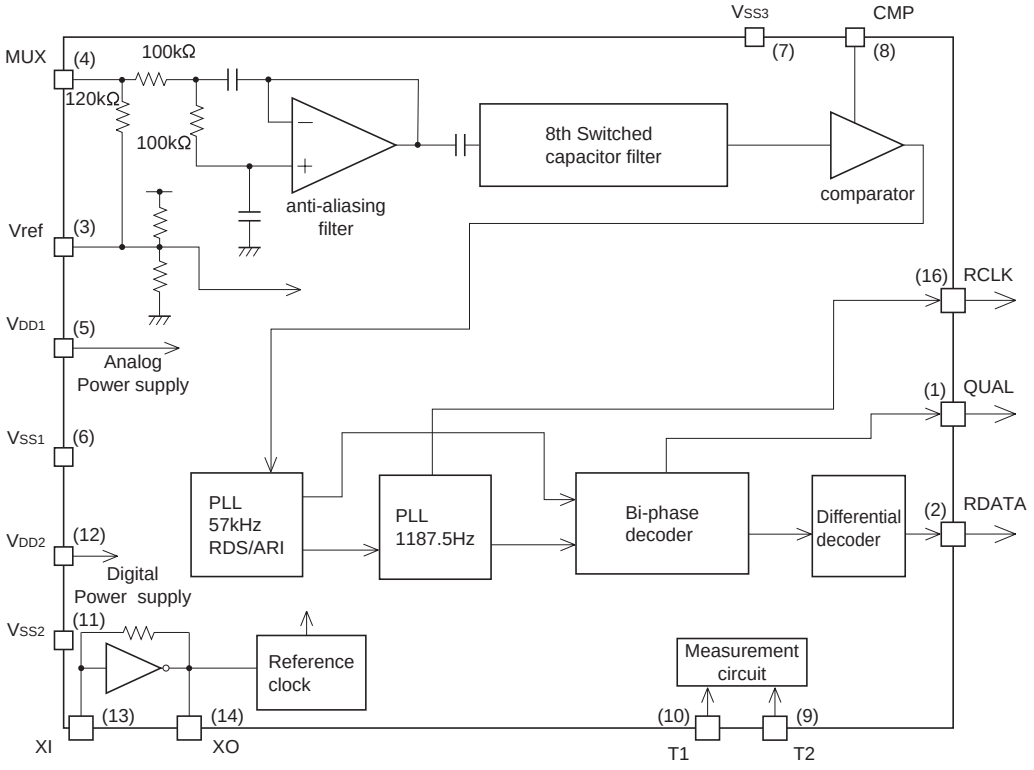

TERMINAL DESCRIPTION

Pin No.	Pin name	Description
1	QUAL	Output terminal of demodulator quality signal.
2	RDATA	Output terminal of demodulator data.
3	Vref	Input terminal of reference voltage.
4	MUX	Input terminal of composite signal.
5	V_{DD1}	Analog power supply.
6	V_{SS1}	Analog power supply.
7	V_{SS3}	Ground.
8	CMP	Input terminal of comparator.
9	T2	Input terminal for test mode.
10	T1	Input terminal for test mode.
11	V_{SS2}	Digital power supply.
12	V_{DD2}	Digital power supply.
13	XI	Connect to oscillator.
14	XO	Connect to oscillator.
15	(N.C.)	---
16	RCLK	Output terminal of demodulator clock.

IC BLOCK DIAGRAMS AND DESCRIPTIONS

CS42518(110dB,192kHz 8-Ch Codec with S/PDIF Receiver)

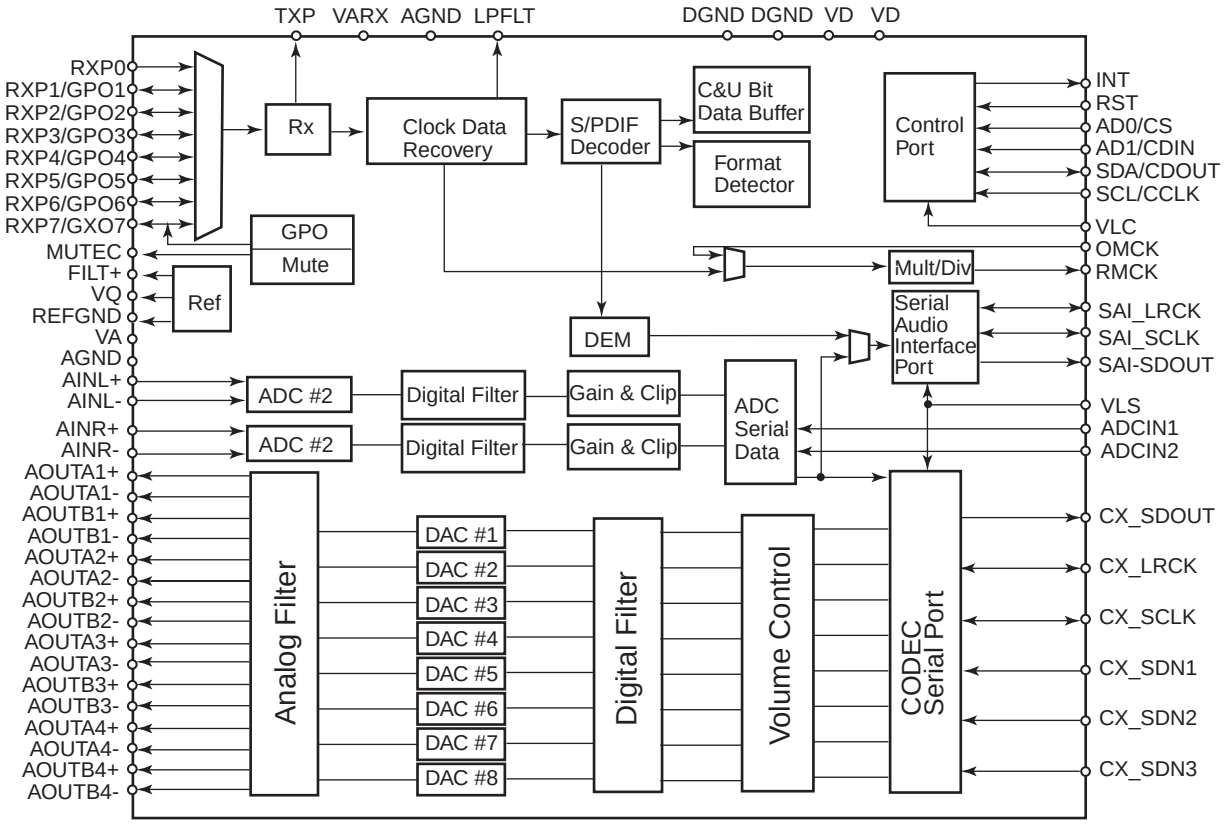

CS5333(24-Bit,96kHz Stereo A/D Converter)

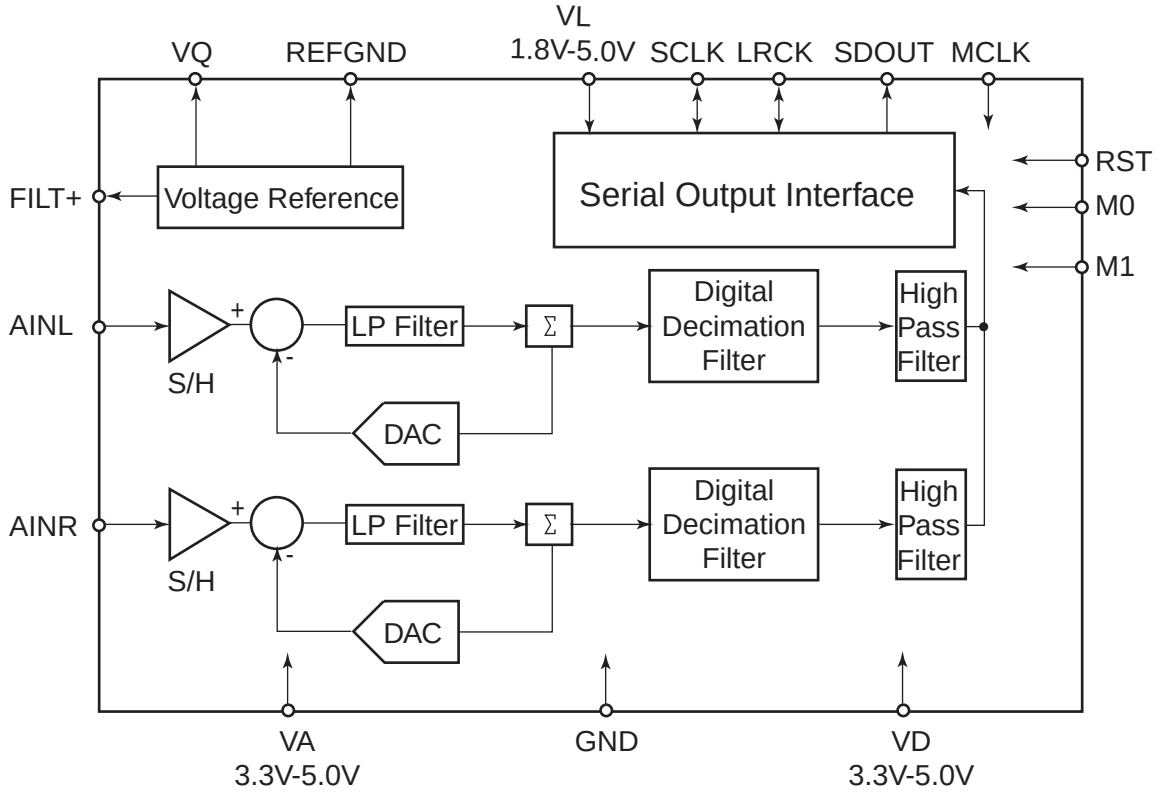

IC BLOCK DIAGRAMS AND DESCRIPTIONS

CS494003(Audio Decoder DSP)

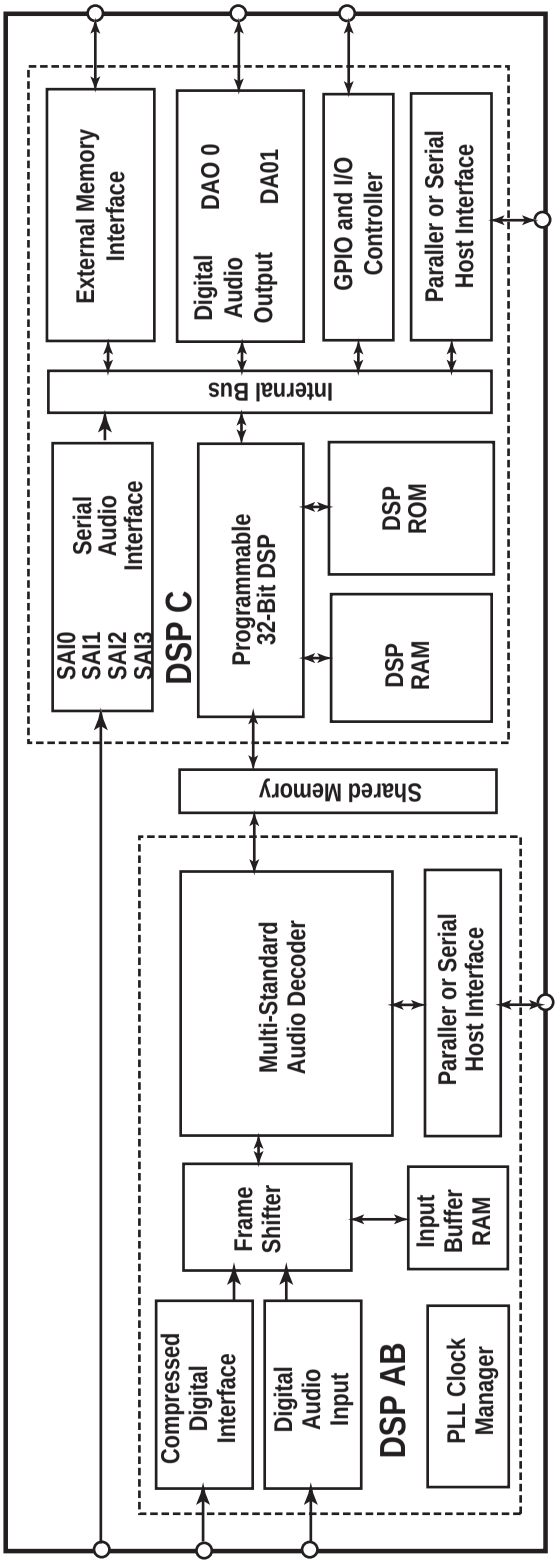

IC BLOCK DIAGRAMS AND TERMINAL DESCRIPTIONS

IC42S16100 (16-Mbit Synchronous Dynamic RAM)

BLOCK DIAGRAM

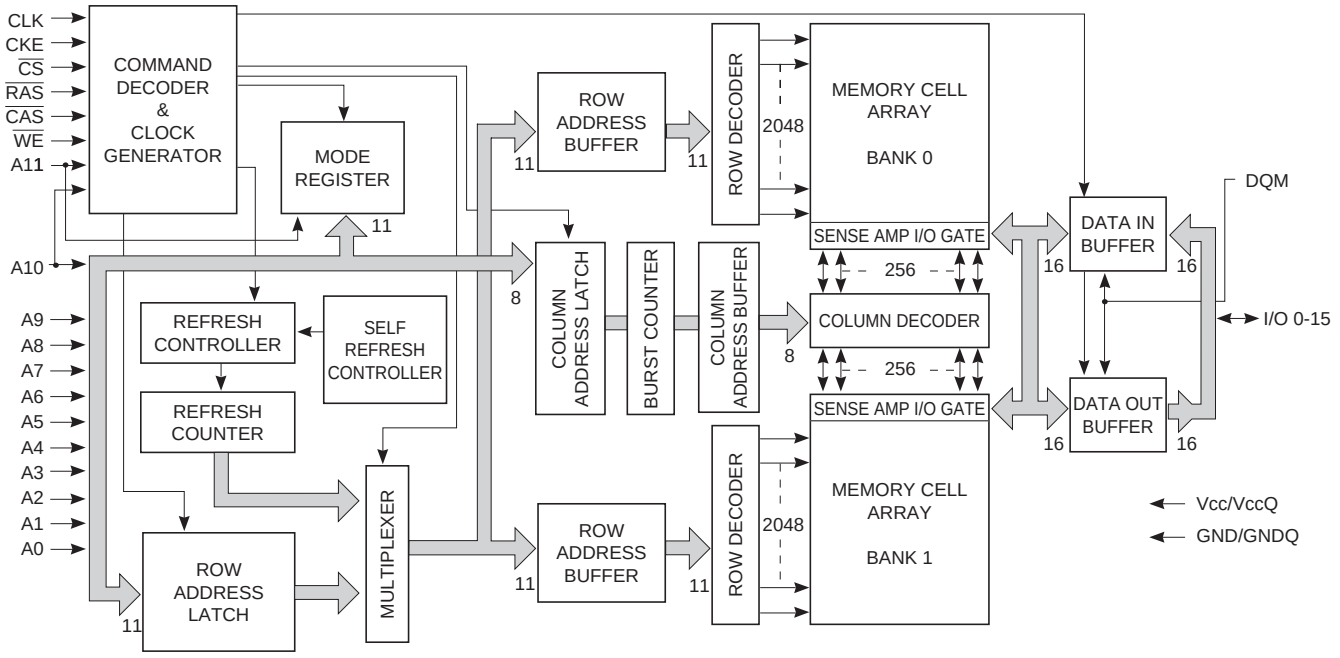

PIN LAYOUT

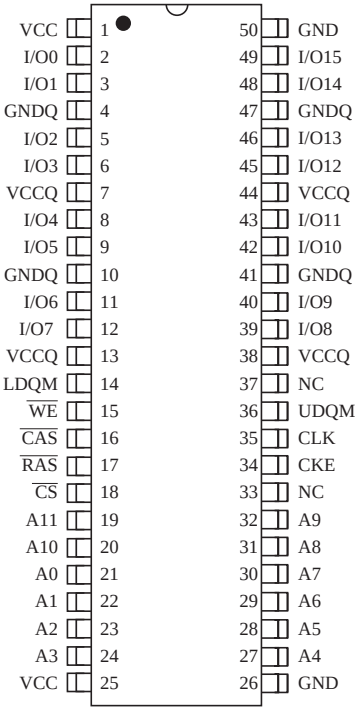

IC BLOCK DIAGRAMS AND TERMINAL DESCRIPTIONS

IC42S16100 (16-Mbit Synchronous Dynamic RAM)

TERMINAL DESCRIPTION

Pin No.	Pin name	Function
20 to 24 27 to 32	A0-A10	A0 to A10 are address inputs. A0-A10 are used as row address inputs during active command input and A0-A7 as column address inputs during read or write command input. A10 is also used to determine the precharge mode during other commands. If A10 is LOW during precharge command, the bank selected by A11 is precharged, but if A10 is HIGH, both banks will be precharged. When A10 is HIGH in read or write command cycle, the precharge starts automatically after the burst access. These signals become part of the OP CODE during mode register set command input.
19	A11	A11 is the bank selection signal. When A11 is LOW, bank 0 is selected and when high, bank 1 is selected. This signal becomes part of the OP CODE during mode register set command input.
16	$\overline{CAS}$	$\overline{CAS}$, in conjunction with the $\overline{RAS}$ and $\overline{WE}$, forms the device command. See the "Command Truth Table" item for details on device commands.
34	CKE	The CKE input determines whether the CLK input is enabled within the device. When is CKE HIGH, the next rising edge of the CLK signal will be valid, and when LOW, invalid. When CKE is LOW, the device will be in either the power-down mode, the clock suspend mode, or the self refresh mode. The CKE is an asynchronous input.
35	CLK	CLK is the master clock input for this device. Except for CKE, all inputs to this device are acquired in synchronization with the rising edge of this pin.
18	$\overline{CS}$	The $\overline{CS}$ input determines whether command input is enabled within the device. Command input is enabled when $\overline{CS}$ is LOW, and disabled with $\overline{CS}$ is HIGH. The device remains in the previous state when $\overline{CS}$ is HIGH.
2, 3, 5, 6, 8, 9, 11, 12, 39, 40, 42, 43, 45, 46, 48, 49	I/O0 to I/O15	I/O0 to I/O15 are I/O pins. I/O through these pins can be controlled in byte units using the LDQM and UDQM pins.
14, 36	LDQM, UDQM	LDQM and UDQM control the lower and upper bytes of the I/O buffers. In read mode, LDQM and UDQM control the output buffer. When LDQM or UDQM is LOW, the corresponding buffer byte is enabled, and when HIGH, disabled. The outputs go to theHIGH impedance state when LDQM/UDQM is HIGH. This function corresponds to $\overline{OE}$ in conventional DRAMs. In write mode, LDQM and UDQM control the input buffer. When LDQM or UDQM is LOW, the corresponding buffer byte is enabled, and data can be written to the device. When LDQM or UDQM is HIGH, input data is masked and cannot be written to the device.
17	$\overline{RAS}$	$\overline{RAS}$, in conjunction with $\overline{CAS}$ and $\overline{WE}$, forms the device command. See the "Command Truth Table" item for details on device commands.
15	$\overline{WE}$	$\overline{WE}$, in conjunction with $\overline{RAS}$ and $\overline{CAS}$, forms the device command. See the "Command Truth Table" item for details on device commands.
7, 13, 38, 44	$V_{CC}Q$	$V_{CC}Q$ is the output buffer power supply.
1, 25	V_{CC}	V_{CC} is the device internal power supply.
4, 10, 41, 47	GNDQ	GNDQ is the output buffer ground.
26, 50	GND	GND is the device internal ground.

IC BLOCK DIAGRAMS AND DESCRIPTIONS

LA7106MFP(75 ohm video driver)

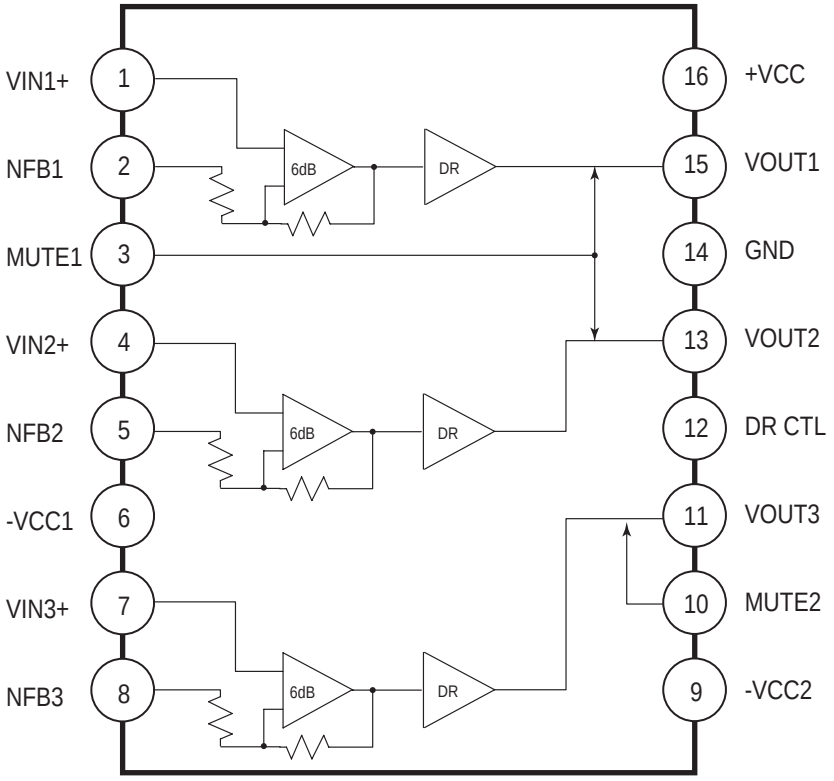

NJM2595M(Video Selector Switch)

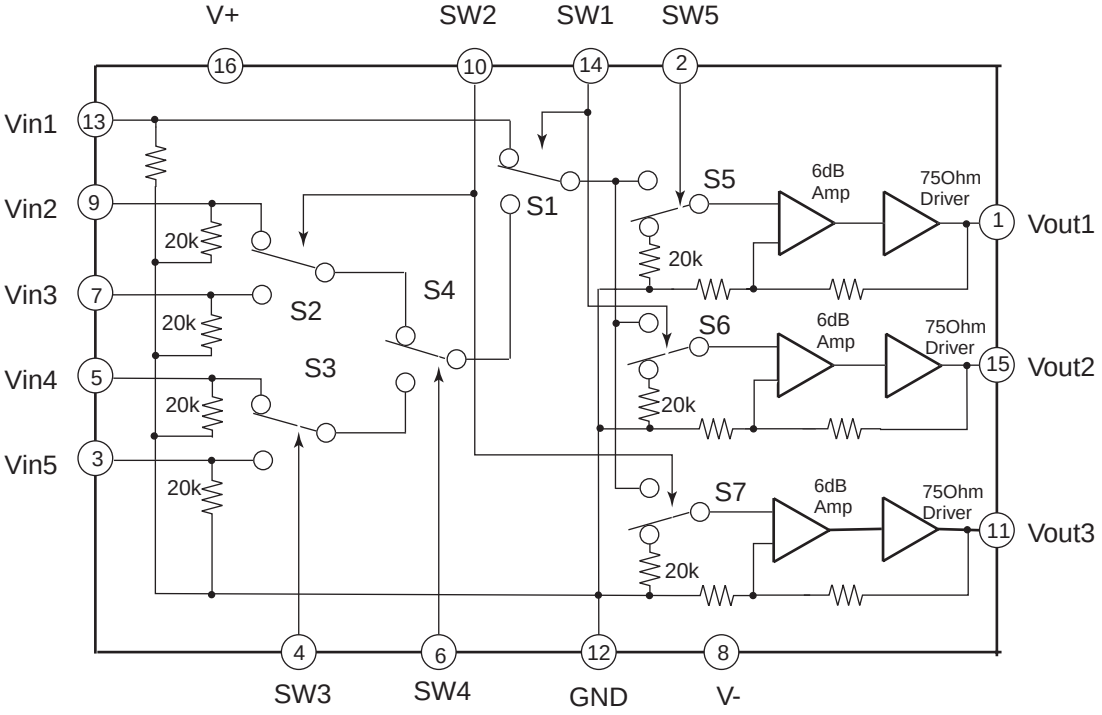

IC BLOCK DIAGRAMS AND DESCRIPTIONS

LC74763-9836(On-screen and controller)

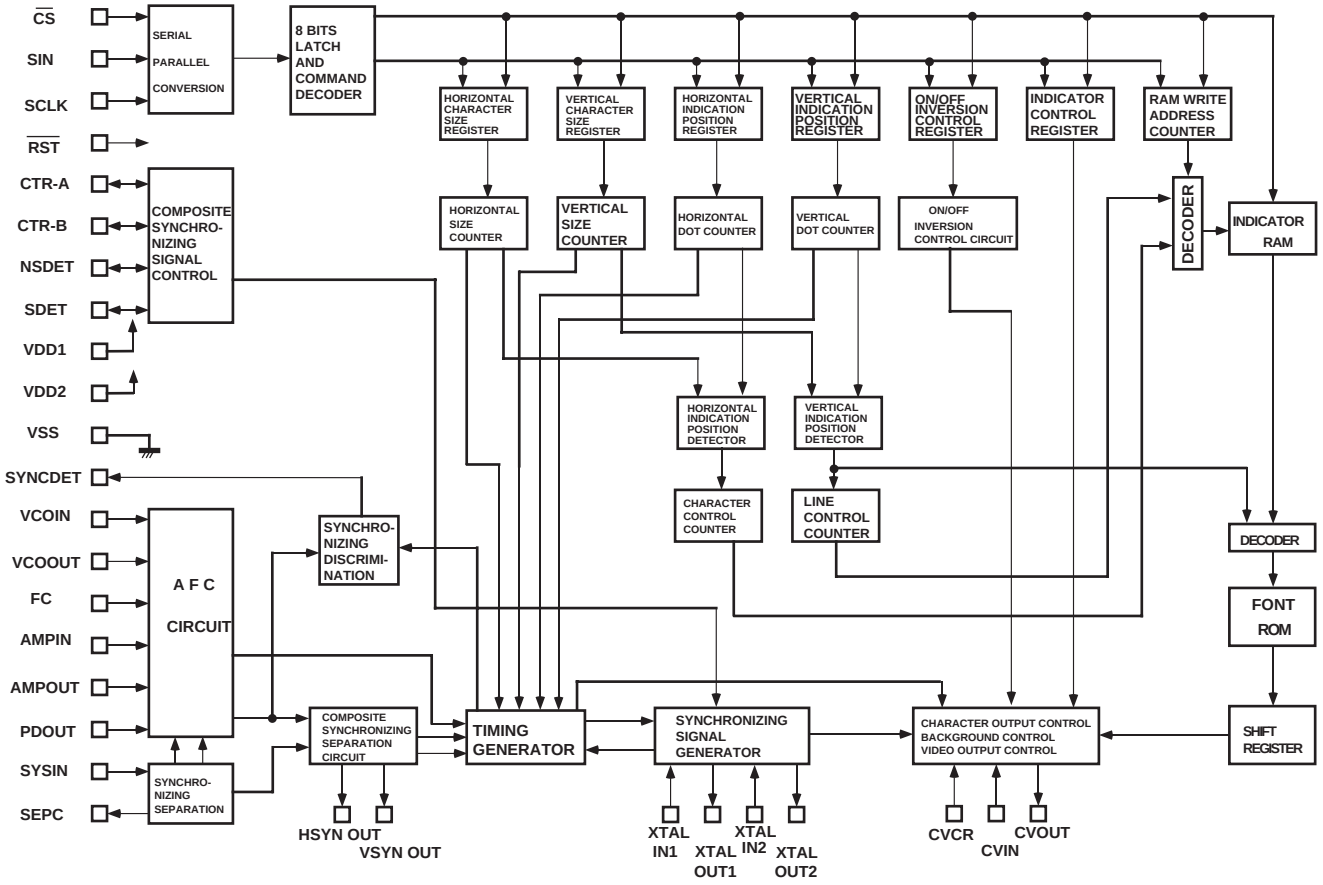

No.	Symbol	Description	No.	Symbol	Description
1	VSS	Ground terminal	16	CVOUT	Composite video output terminal
2	XTALIN1	Crystal oscillator connection terminals for.	17	VDD2	Power supply terminal for composite video signal
3	XTALOUT1	internal synchronizing signal generator	18	CVIN	Composite video signal input terminal
4	HSYNCOUT	Horizontal synchronizing signal output terminal	19	CVCR	Cromatic signal input term,inal
5	XTALIN2	Crystal oscillator connection terminals for	20	SYNCIN	Video signal input terminal for internal synchronizing separation circuit
6	XTALOUT2	internal synchronizing signal generator	21	SEPC	Bias output pin for internal synchronizing separation circuit
7	VSYNCOUT	Vertical synchronizing signal output terminal	22	VSS	Ground terminal
8	CS	Chip enable input terminal	23	PDOUT	Power supply output terminal for AFC circuit
9	SIN	Serial data input terminal	24	AMPIN	Filter connection terminals
10	SCLK	Clock input terminal for serial data	25	AMPOUT	
11	CTR-A	Video control output terminal	26	FC	Power supply output terminal
12	CTR-B	Video control output terminal	27	VCOIN	LC resonator connection terminals for VCO
13	NSDET	Selection pin for PAL or NTSC	28	VCOOUT	
14	SDET	Signal detection terminal	29	SYNCDET	External synchronizing signal discrimination output terminal
15	RST	System reset input terminal	30	VDD1	Power supply terminal

IC BLOCK DIAGRAMS AND DESCRIPTIONS

M66005-0001AFP(FL tube drive IC)

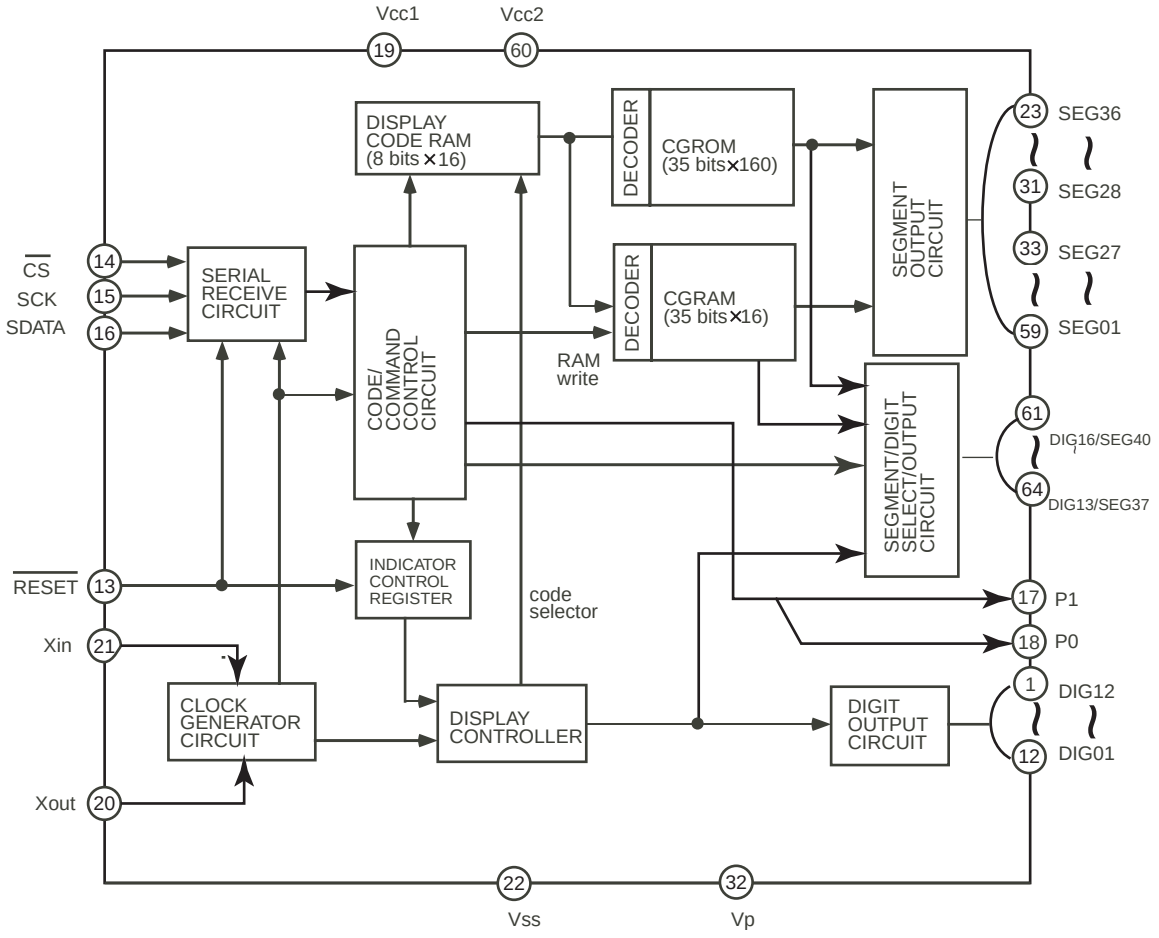

IC BLOCK DIAGRAMS AND TERMINAL DESCRIPTIONS

MX29LV040 (4M-Bit CMOS Single Voltage 3V Only Equal Sector Flash Memory)

BLOCK DIAGRAM

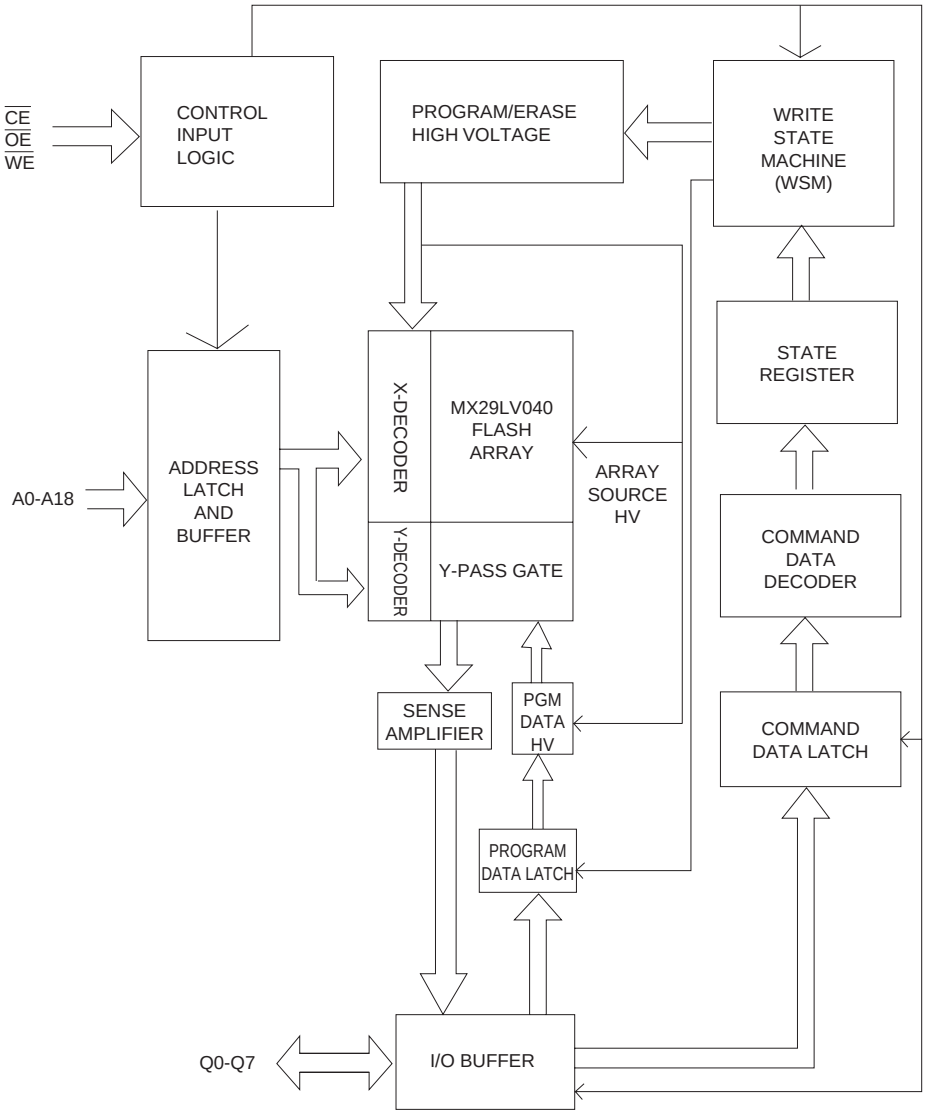

PIN LAYOUT

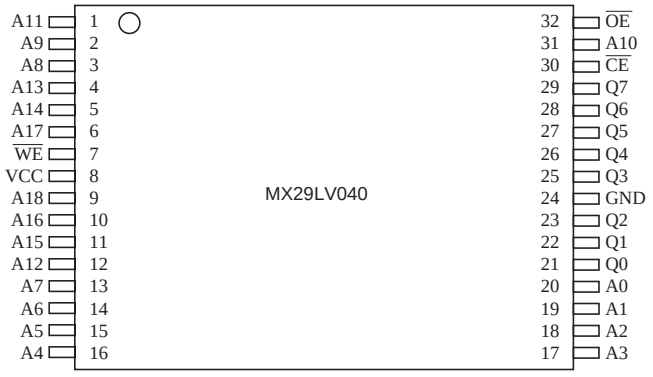

TERMINAL DESCRIPTION

Pin Name	Description
A0~A18	Address Input
Q0~Q7	Data Input/Output
$\overline{CE}$	Chip Enable Input
$\overline{WE}$	Write Enable Input
$\overline{OE}$	Output Enable Input
GND	Ground Pin
VCC	+3.0V single power supply

IC BLOCK DIAGRAMS AND DESCRIPTIONS

NJW1157(8-Channel Electronic Volume with Input Selector)

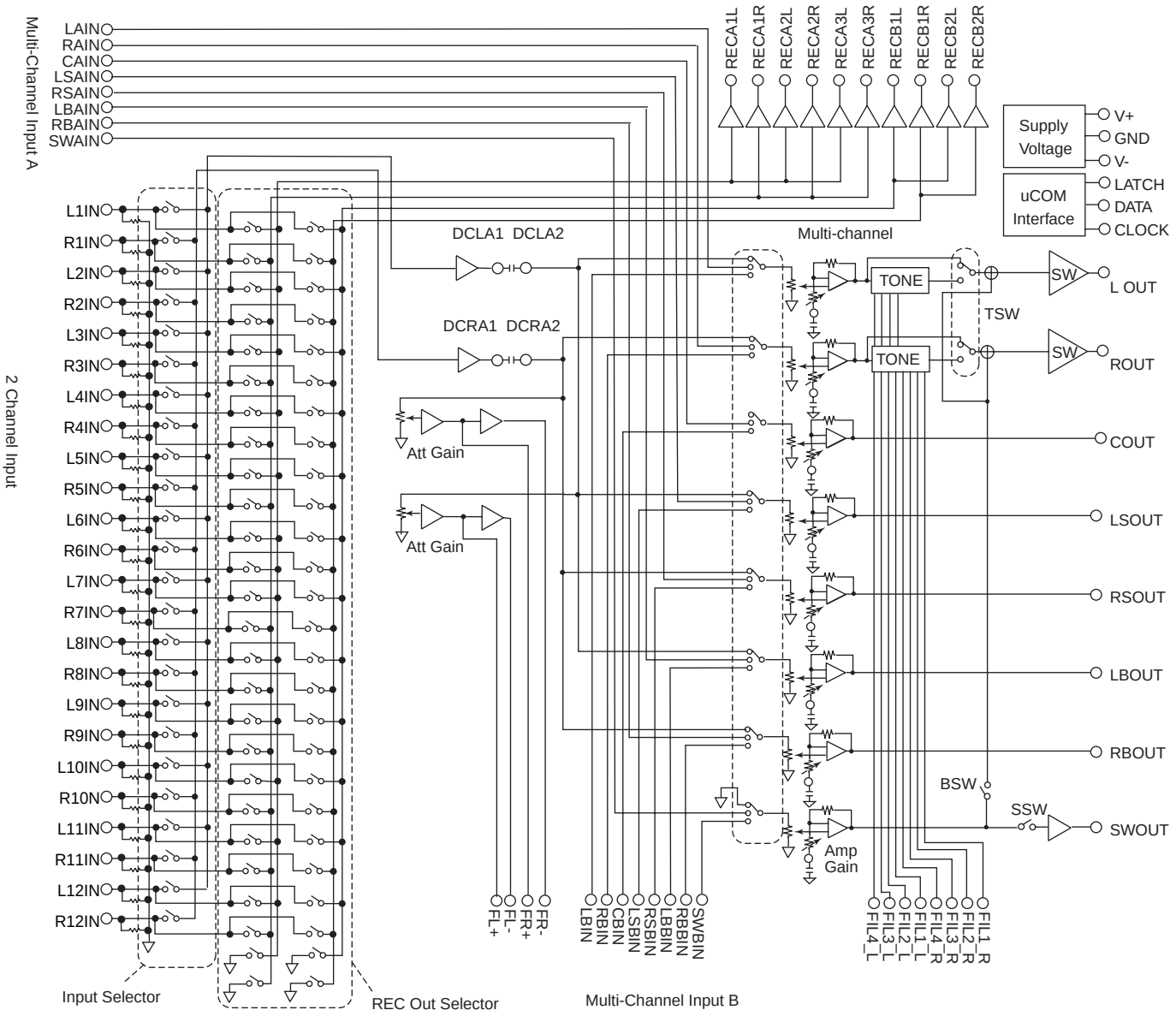

IC BLOCK DIAGRAMS AND DESCRIPTIONS

NJW1157(8-Channel Electronic Volume with Input Selector)

PIN FUNCTION

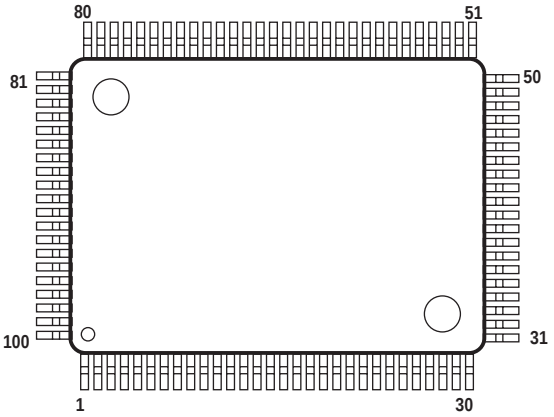

No.	SYMBOL	FUNCTION	No.	SYMBOL	FUNCTION
1	LOUT	Lch output	51	L1IN	"Input selector" Lch input 1
2	ROUT	Rch output	52	R1IN	"Input selector" Rch input 1
3	COUT	Cch output	53	L2IN	"Input selector" Lch input 2
4	LSOUT	LSch output	54	R2IN	"Input selector" Rch input 2
5	RSOUT	RSch output	55	L3IN	"Input selector" Lch input 3
6	LBOUT	LBch output	56	R3IN	"Input selector" Rch input 3
7	RBOUT	RBch output	57	L4IN	"Input selector" Lch input 4
8	SWOUT	SWch output	58	R4IN	"Input selector" Rch input 4
9	DC_L1	Lch Bass filter DC cut capacitor output terminal	59	L5IN	"Input selector" Lch input 5
10	DC_L2	Lch Bass filter DC cut capacitor input terminal	60	R5IN	"Input selector" Rch input 5
11	FIL_BL	Lch Bass filter terminal	61	L6IN	"Input selector" Lch input 6
12	FIL_TL	Lch Treble filter terminal	62	R6IN	"Input selector" Rch input 6
13	DC_R1	Rch Bass filter DC cut capacitor output terminal	63	L7IN	"Input selector" Lch input 7
14	DC_R2	Rch Bass filter DC cut capacitor input terminal	64	R7IN	"Input selector" Rch input 7
15	FIL_BR	Rch Bass filter terminal	65	L8IN	"Input selector" Lch input 8
16	FIL_TR	Rch Treble filter terminal	66	R8IN	"Input selector" Rch input 8
17	N.C.	No connect	67	L9IN	"Input selector" Lch input 9
18	N.C.	No connect	68	R9IN	"Input selector" Rch input 9
19	V+	+ Power supply voltage input	69	L10IN	"Input selector" Lch input 10
20	V-*	- Power supply voltage input	70	R10IN	"Input selector" Rch input 10
21	REC_A1L	"Input selector" Lch REC output A1	71	L11IN	"Input selector" Lch input 11
22	REC_A1R	"Input selector" Rch REC output A1	72	R11IN	"Input selector" Rch input 11
23	REC_A2L	"Input selector" Lch REC output A2	73	L12IN	"Input selector" Lch input 12
24	REC_A2R	"Input selector" Rch REC output A2	74	R12IN	"Input selector" Rch input 12
25	REC_A3L	"Input selector" Lch REC output A3	75	NC	No connect
26	REC_A3R	"Input selector" Rch REC output A3	76	DGND	Digital Ground
27	REC_B1L	"Input selector" Lch REC output B1	77	DATA	Control data signal input
28	REC_B1R	"Input selector" Rch REC output B1	78	CLOCK	Clock signal input
29	REC_B2L	"Input selector" Lch REC output B2	79	LATCH	Latch signal input
30	REC_B2R	"Input selector" Rch REC output B2	80	LAIN	Multi-channel Lch input A
31	DCCAP_L	Switching noise rejection capacitor	81	RAIN	Multi-channel Rch input A
32	DCCAP_R	Switching noise rejection capacitor	82	CAIN	Multi-channel Cch input A
33	DCCAP_C	Switching noise rejection capacitor	83	LSAIN	Multi-channel LSch input A
34	GND	Ground	84	RSAIN	Multi-channel RSch input A
35	GND	Ground	85	LBAIN	Multi-channel LBch input A
36	DCCAP_LS	Switching noise rejection capacitor	86	RBAIN	Multi-channel RBch input A
37	DCCAP_RS	Switching noise rejection capacitor	87	SWAIN	Multi-channel SWch input A
38	DCCAP_LB	Switching noise rejection capacitor	88	LBIN	Multi-channel Lch input B
39	DCCAP_RB	Switching noise rejection capacitor	89	RBIN	Multi-channel Rch input B
40	DCCAP_SW	Switching noise rejection capacitor	90	CBIN	Multi-channel Cch input B
41	DCL_OUT	"Input selector" Lch output	91	LSBIN	Multi-channel LSch input B
42	DCL_IN	"Multi-channel selector" Lch output	92	RSBIN	Multi-channel RSch input B
43	DCR_OUT	"Input selector" Rch output	93	LBBIN	Multi-channel LBch input B
44	DCR_IN	"Multi-channel selector" Rch output	94	RBBIN	Multi-channel RBch input B
45	FL+	"Input selector gain control" Lch no-inverted output	95	SWBIN	Multi-channel SWch input B
46	FL-	"Input selector gain control" Lch inverted output	96	GND	Ground
47	FR+	"Input selector gain control" Rch no-inverted output	97	GND	Ground
48	FR-	"Input selector gain control" Rch inverted output	98	VSSOUT2	Internal Digital -Power Supply Output 2
49	VDDOUT	Internal Digital +Power Supply Output	99	VDDOUT2	Internal Digital +Power Supply Output 2
50	VSSOUT	Internal Digital -Power Supply Output	100	TCCAP	Switching noise rejection capacitor

IC BLOCK DIAGRAMS AND DESCRIPTIONS

TC9162BFG(Function Switch)

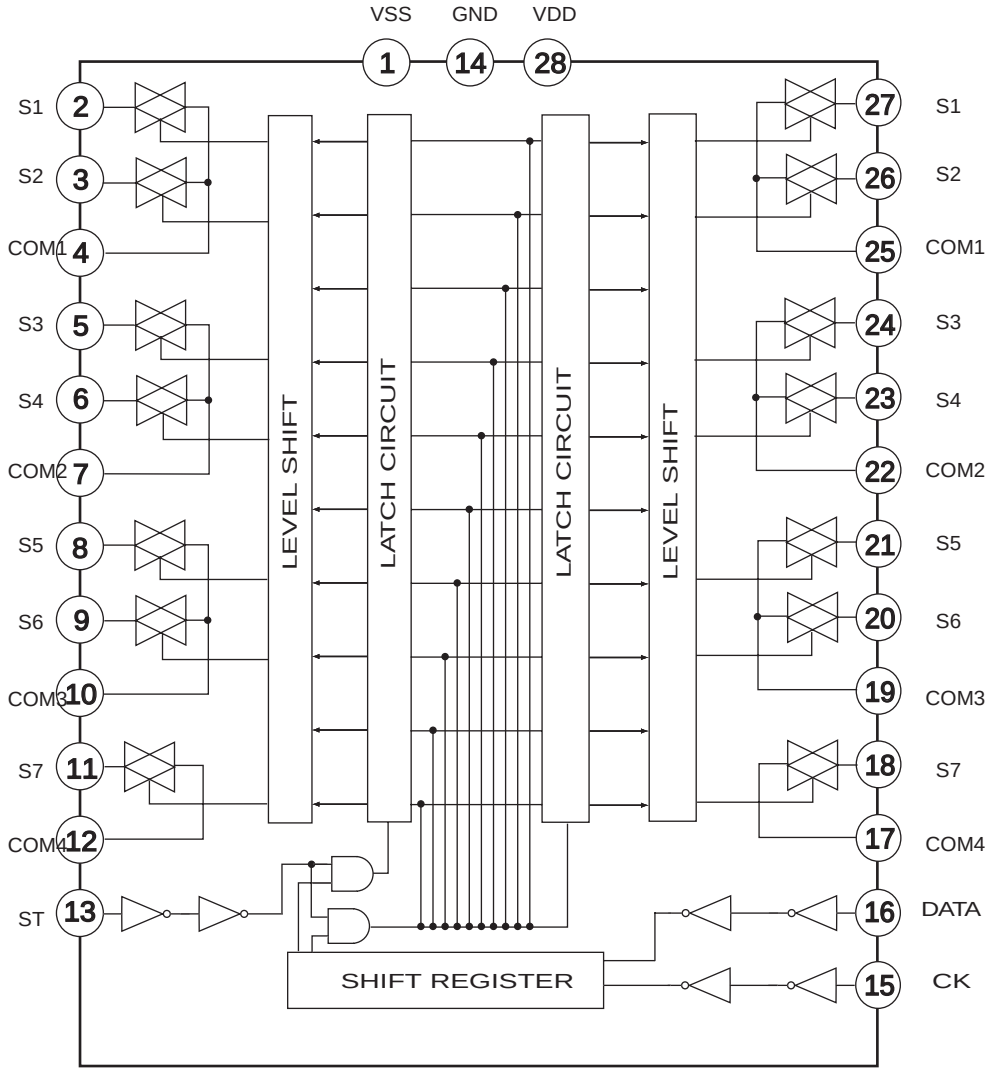

Pin No.	Symbol	Function
1	Vss	Negative power supply
14	GND	Ground
28	VDD	Positive power supply
2,3,5,6,8,9,11	S1~S7	Input/output terminals
27,26,24,23,21,20,18	S1~S7	Input/output terminals
4,7,10,12	COM1 ~ COM4	Common terminals
25,22,19,17	COM1 ~ COM4	Common terminals
13	ST	Strobe input terminal for data reading
15	C K	Clock input terminal for data transfer
16	DAT A	Data input terminal for switch

IC BLOCK DIAGRAMS AND DESCRIPTIONS

TC9164AF(Function switch)

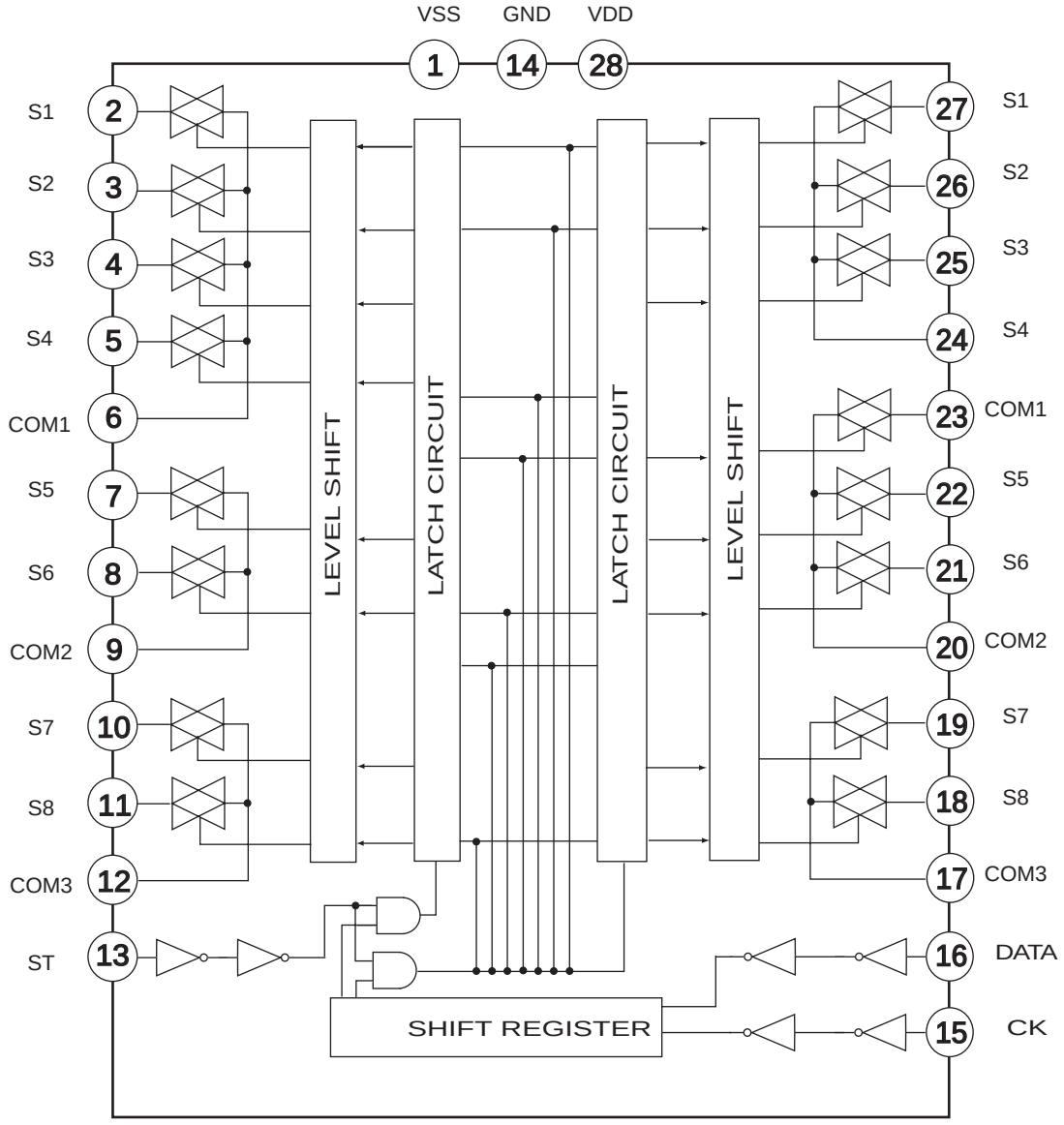

Pin No.	Symbol	Function
1	Vss	Negative power supply
14	GND	Ground
28	VDD	Positive power supply
2,3,4,6,7,8,10,11	S1~S8	Input/output terminals
27,26,25,23,22,21,19,18	S1~S8	Input/output terminals
5,9,12	COM1 ~ COM3	Common terminals
24,20,17	COM1 ~ COM3	Common terminals
13	ST	Strobe input terminal for data reading
15	C K	Clock input terminal for data transfer
16	DAT A	Data input terminal for switch

IC BLOCK DIAGRAMS AND DESCRIPTIONS

TC74HCT7007AF(Hex buffer)

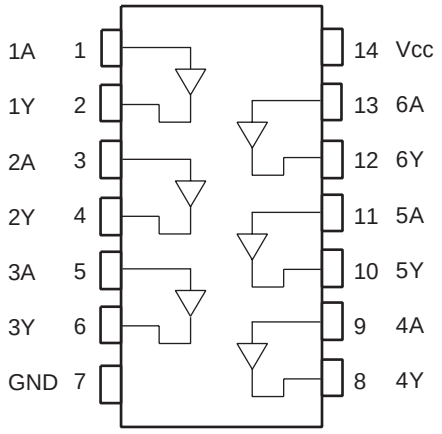

(TOP VIEW)

Truth table

A	Y
L	L
H	H

TC74VHC541FT(Octal bus buffer)

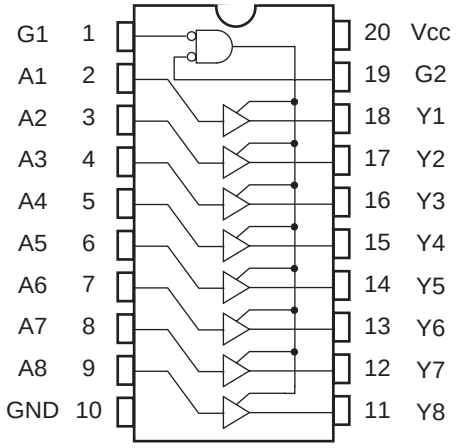

INPUTS			OUTPUT
$\overline{G1}$	$\overline{G2}$	An	
H	X	X	Z
X	H	X	Z
L	L	H	H
L	L	L	L

X :Don't care
Z :High impedance

74HCU04F(Hex Inverters)

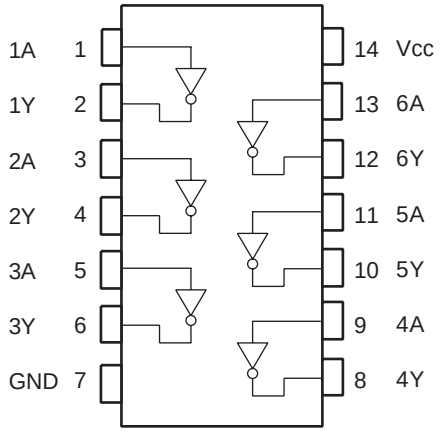

(TOP VIEW)

Truth table

A	Y
L	H
H	L

MICROPROCESSOR-CONNECTION DIAGRAM

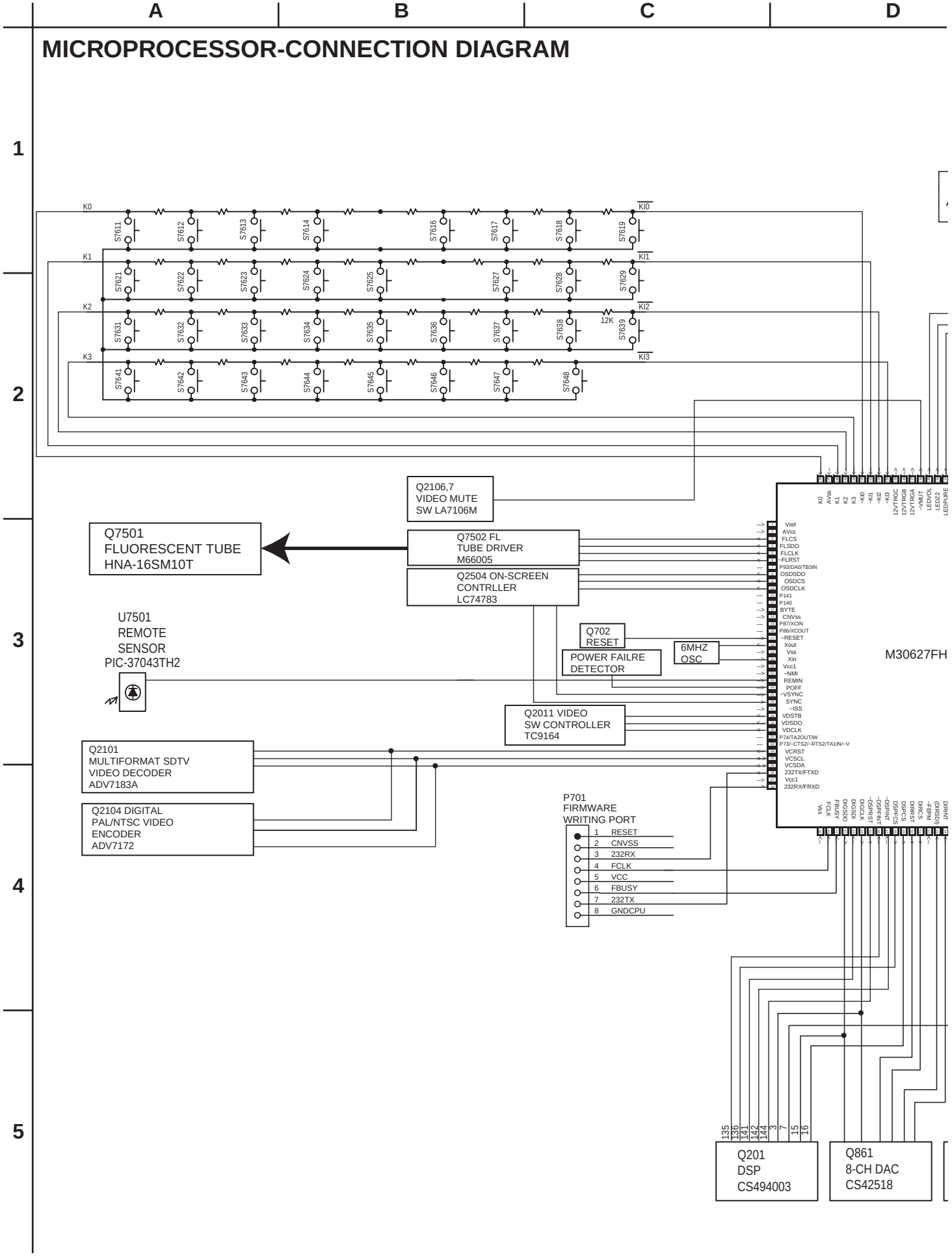

MICROPROCESSOR-CONNECTION DIAGRAM

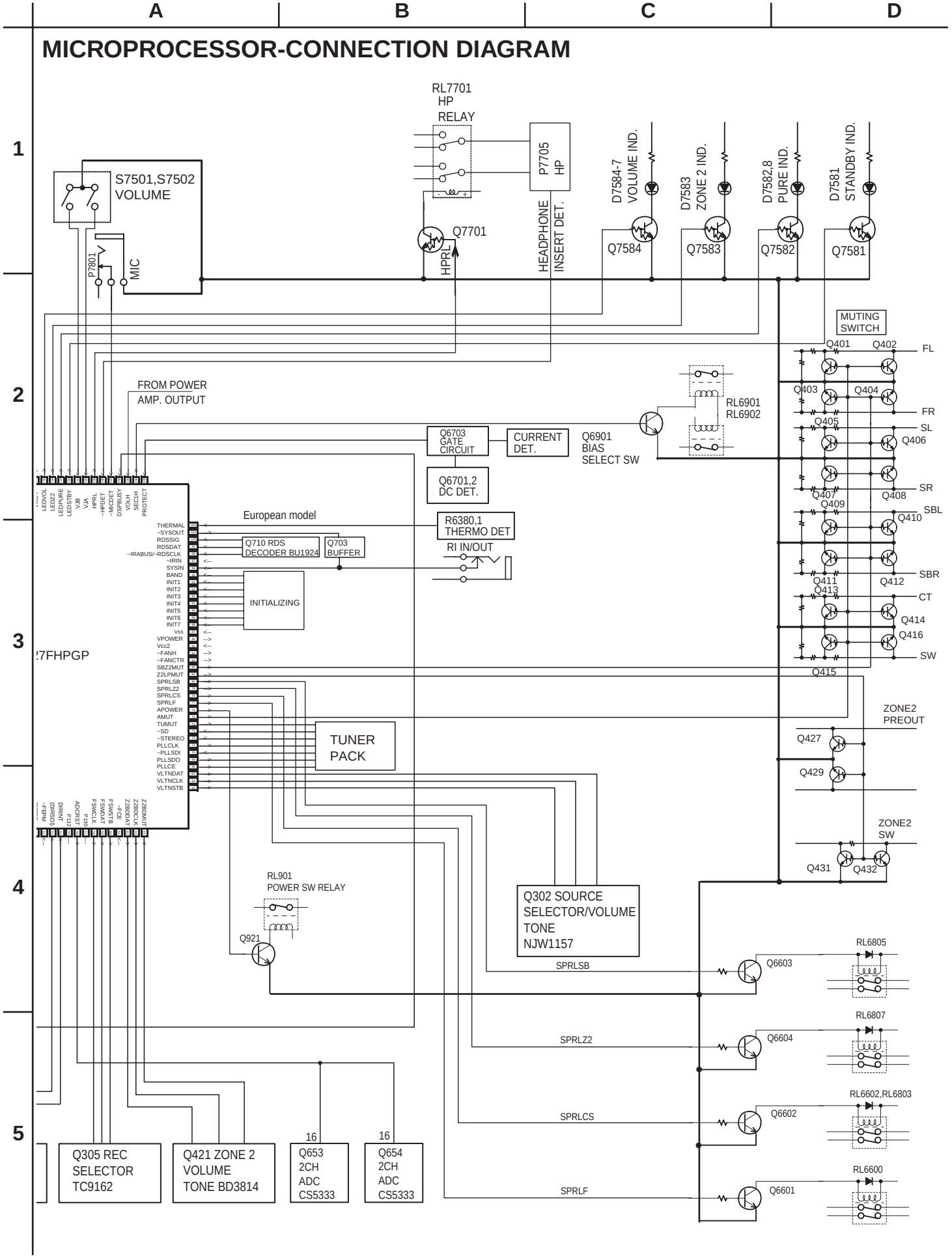

MICROPROCESSOR-TERMINAL DESCRIPTIONS

No.	Terminal	Symbol	I/O	Act.	Description
1	Vref	Vref	I		Connect to Vcc. Reference voltage input terminal for A/D converter.
2	AVcc	AVcc	I		Connect to Vcc. Power supply terminal for A/D converter.
3	P97/~ADTRG/SIN4	FLCS	O	L	Chip selector output terminal for FL tube driver
4	P96/ANEX1/SOUT4	FLSDO	O	H	Data output terminal for FL tube driver
5	P95/ANEX0/CLK4	FLCLK	O	CLK	Clock output terminal for FL tube driver
6	P94/DA1/TB4IN	~FLRST	O	L	Reset signal output terminal for FL tube driver
7	P93/DA0/TB3IN				
8	P92/TB2IN/SOUT3	OSDSDO	O	H	Data output terminal for on-screen display IC
9	P91/TB1IN/SIN3	OSDCS	O	H	Chip select output terminal for on-screen display IC
10	P90/TB0IN/CLK3	OSDCLK	O	CLK	Clock output terminal for on-screen display IC
11	P141				
12	P140				
13	BYTE	BYTE	I		Connect to Vss. Change over input terminal of external data bus width.
14	CNVss	CNVss	I		Connect to Vss via a resistor. Change over terminal of processor mode.
15	P87/XCIN				
16	P86/XCOUT				
17	~RESET	~RESET	I		Reset signal input terminal for microprocessor.
18	Xout	Xout	O		Oscillation circuit output terminal of main clock.
19	Vss	Vss	I		Connect to a ground terminal.
20	Xin	Xin	I		Oscillation circuit input terminal for main clock
21	Vcc1	Vcc1	I		2.7V<Vcc2≦Vcc1<5.5V
22	P85/~NMI	~NMI	I	L	Connect to Vcc via a resistor.
23	P84/~INT2	REMIN	I	L	Remote control signal input terminal
24	P83/~INT1	POFF	I	L	Power failure detection input terminal
25	P82/~INT0	~VSYNC	I	L	Vertical synchronization detection input terminal
26	P81/TA4IN/~U	SYNC	I	H	Synchronization detection input terminal
27	P80/TA4OUT/U	~ISS	I	L	
28	P77/TA3IN	VDSTB	O	H	Strobe signal output terminal for video switch
29	P76/TA3OUT	VDSDO	O	H	Data output terminal for video switch
30	P75/TA2IN/~W	VDCLK	O	CLK	Clock output terminal for video switch
31	P74/TA2OUT/W				
32	P73/~CTS2/~RTS2/TA1IN/~V				
33	P72/CLK2/TA1OUT/V	VCRST	O	H	Reset signal output terminal for Y/C separation and video converter ICs.
34	P71/RXD2/SCL2/TA0IN/TB5IN	VCSCL	I/O	H	Clock signal input/output terminal for Y/C separation and video converter ICs.
35	P70/TXD2/SDA2/TA0OUT	VCSDA	I/O	H	Data input/output terminal for Y/C separation and video converter ICs.
36	P67/TXD1/SDA1	232TX/FTXD	O	H	Data transfer terminal for RS-232C and flash writer.
37	Vcc1	Vcc1	I		2.7V<Vcc2≦Vcc1<5.5V
38	P66/RXD1/SCL1	232RX/FRXD	I	H	Data received terminal for RS-232C and flash writer.
39	Vss	Vss	I		Connect to ground terminal.
40	P65/CLK1	FCLK	I	CLK	Clock input terminal for flash writer
41	P64/~CTS1/~RTS1/~CTS0/CLKS	FBUSY	I	H	Busy terminal for flash writer
42	P63/TXD0/SDA0	DIGSDO	O	H	Common data output terminal for digital section
43	P62/RXD0/SCL0	DIGSDI	I	H	Data input terminal from DSP IC
44	P61/CLK0	DIGCLK	O	CLK	Common clock output terminal for digital section
45	P60/~CTS0/~RTS0	~DSPRST	O	L	Reset signal output terminal for DSDP IC
46	P137	~DSPFINT	I	H	Input terminal to inform the status change of DSP IC.
47	P136	~DSPINT	I	H	Input terminal to inform the status change of DSP IC.
48	P135	DSPFCS	O	H	Chip select output terminal of DSP IC
49	P134	DSPCS	O	H	Chip select output terminal of DSP IC
50	P57/~RDY/CLKOUT	DIRRST	O	L	Reset signal output terminal of DIR IC
51	P56/ALE	DIRCS	O	L	Chip select output terminal for DIR IC
52	P55/~HOLD	~FEPM	I	L	Connect to ground terminal via resistor. Setting terminal of flash writer.
53	P54/~HLDA	(DIRSDI)	I	H	Data input terminal of DIR IC
54	P133	DIRINT	I	H	Unlock detection terminal of DIR IC
55	P132				
56	P131	ADCRST	O	L	Reset input terminal for multi channel A/D converter
57	P130				
58	P53/BCLK	FSWCLK	O	CLK	Clock signal output terminal of function switch
59	P52/~RD	FSWDAT	O	H	Data output terminal of function switch
60	P51/~WRH/~BHE	FSWSTB	O	H	Strobe signal output terminal of function switch
61	P50/~WRL/~WR	~FCE	I	L	Connect to Vcc2 terminal via resistor. Setting terminal of flash writer.
62	P127	Z2BDDAT	O	H	Data output terminal to volume and tone control IC for zone 2.
63	P126	Z2BDCLK	O	H	Clock output terminal to volume and tone control IC for zone 2.
64	P125	Z2BDMUT	O	H	Muting signal output terminal to volume and tone control IC for zone 2.

MICROPROCESSOR-TERMINAL DESCRIPTIONS

No.	Terminal	Symbol	I/O	Act.	Description
65	P47/~CS3	VLTNSTB	O	H	Strobe signal output terminal for selector, volume and tone control IC.
66	P46/~CS2	VLTNCLK	O	CLK	Clock output terminal for selector, volume and tone control IC.
67	P45/~CS1	VLTNDAT	O	H	Data output terminal for selector, volume and tone control IC.
68	P44/~CS0	PLLCE	O	H	Chip enable out terminal for tuner unit
69	P43/A19	PLLSDO	O	H	Data output terminal for tuner unit
70	P42/A18	~PLLSDI	I	L	Data input terminal from tuner unit
71	P41/A17	PLLCLK	O	CLK	Clock output terminal for tuner unit
72	P40/A16	~STEREO	I	L	Stereo detection input terminal from tuner unit
73	P37/A15	~SD	I	L	broadcast detection input terminal from tuner unit
74	P36/A14	TUMUT	O	H	Mute control output terminal for tuner unit
75	P35/A13	AMUT	O	H	Muting control output terminal of audio section
76	P34/A12	APOWER	O	H	Power supply relay control output terminal
77	P33/A11	SPRLF	O	H	Speaker relay control output terminal of front channel
78	P32/A10	SPRLCS	O	H	Speaker relay control output terminal of center and surround channels
79	P31/A09	SPRLZ2	O	H	Speaker relay control output terminal of zone 2
80	P124	SPRLSB	O	H	Speaker relay control output terminal of surround back channel
81	P123	Z2LPMUT	O	H	Muting control output terminal of zone 2 and pre output terminal
82	P122	SBZ2MUT	O	H	Muting control output terminal of zone 2 and surround back channels.
83	P121	~FANCTR	O	L	Lower speed or off setting output terminal of fun
84	P120	~FANH	O	L	High speed setting output terminal of fun
85	Vcc2	Vcc2	I		Connect to 2.7V<Vcc2≦Vcc1<5.5V
86	P30/A8(/-/D7)	VPOWER	O	H	Power supply control output terminal of video section
87	Vss	Vss	I		Connect to ground terminal
88	P27/AN27/A7(/D7/D6)	INIT7	I	A/D	Initializing terminal
89	P26/AN26/A6(/D6/D5)	INIT6	I	A/D	Initializing terminal
90	P25/AN25/A5(/D5/D4)	INIT5	I	A/D	Initializing terminal
91	P24/AN24/A4(/D4/D3)	INIT4	I	A/D	Initializing terminal
92	P23/AN23/A3(/D3/D2)	INIT3	I	A/D	Initializing terminal
93	P22/AN22/A2(/D2/D1)	INIT2	I	A/D	Initializing terminal
94	P21/AN21/A1(/D1/D0)	INIT1	I	A/D	Initializing terminal
95	P20/AN20/A0(/D0/-)	BAND	I	A/D	Band area setting input terminals of tuner section
96	P17/D15/~INT5	SYSIN	I	H	RI input terminal
97	P16/D14/~INT4	~IRIN	I	L	IOR IN input terminal
98	P15/D13/~INT3	~RDSCLK	I	L	[MPP]RDS IC clock input terminal
99	P14/D12	RDSDAT	I	L	RDS IC data input terminal
100	P13/D11	RDSSIG	I	L	RDS IC demodulator signal input terminal
101	P12/D10	~SYSOUT	O	H	RI output terminal
102	P11/D9	THERMAL	I	H	Thermal detection input terminal
103	P10/D8	PROTECT	I	H	Voltage protect input terminal
104	P07/AN07/D7	SEC1H	O	H	Power amplifier voltage select terminal
105	P06/AN06/D6	VOLH	I	A/D	Power amplifier voltage detection input terminal
106	P05/AN05/D5	DSPBUSY	I	H	DSP BUSY signal detection terminal
107	P04/AN04/D4	~MICDET	I	L	Microphone signal detection input terminal
108	P03/AN03/D3	~HPDET	I	L	Headphone detection input terminal
109	P02/AN02/D2	HPRL	O	H	Headphone relay control output terminal
110	P01/AN01/D1	VJA	I	H	Rotary encoder input terminal for volume
111	P00/AN00/D0	VJB	I	H	Rotary encoder input terminal for volume
112	P117	LEDSTBY	O	L	STANDBY/RECV indicator control output terminal
113	P116	LEDPURE	O	H	PURE AUDIO indicator control output terminal
114	P115	LEDZ2	O	H	ZONE2 indicator control; output terminal
115	P114	LEDVOL	O	H	VOLUME control output terminal
116	P113	~VMUT	O	L	Muting control output terminal of video section
117	P112	12VTRGA	O	H	12V Trigger A control output terminal
118	P111	12VTRGB	O	H	12V Trigger B control output terminal
119	P110	12VTRGC	O	H	12V Trigger C/Z2 control output terminal
120	P107/AN7/~KI3	~KI3	I	L	Key input interrupter input terminal
121	P106/AN6/~KI2	~KI2	I	L	Key input interrupter input terminal
122	P105/AN5/~KI1	~KI1	I	L	Key input interrupter input terminal
123	P104/AN4/~KI0	~KI0	I	L	Key input interrupter input terminal
124	P103/AN3	K3	I	A/D	Key input terminal
125	P102/AN2	K2	I	A/D	Key input terminal
126	P101/AN1	K1	I	A/D	Key input terminal
127	AVss	AVss	I		Connect to Vss. Power supply terminal for A/D converter.
128	P100/AN0	K0	I	A/D	Key input terminal

ADJUSTMENT AND CONFIRMATION PROCEDURES

1.Idling current adjustment

Before Idling adjustment, turn the trimming resistors R6040 to R6045 counter-clockwise fully.
Connect the DC voltmeter to sockets P6080 to P6086.
After turn POWER to ON, adjust the trimming resistors R6040, R6041 and R6042 so that the reading of voltmeter becomes 1.25mV. (Front and center channels)
Adjust the trimming resistors R6043, R6044,R6045 and R6046 so that the reading of voltmeter becomes 0.75 mV. (Surround and surround back channels)
After adjustment, attach the top cover.
Confirm the voltage of points above after about five minutes.

Front and center channels

When less than 5.0 mV, readjust the resistors above so that the voltage becomes 5.0 mV.
When 5.0 mV to 6.0 mV, it is not necessary to adjust.
When more than 6.0 mV, readjust the resistors above so that the voltage becomes 6.0 mV.

Surround and surround back channels

When less than 3.5 mV, readjust the resistors above so that the voltage becomes 3.5 mV.
When 3.5 mV to 4.5 mV, it is not necessary to adjust.
When more than 4.5 mV, readjust the resistors above so that the voltage becomes 4.5 mV.
Note: No load and No signal

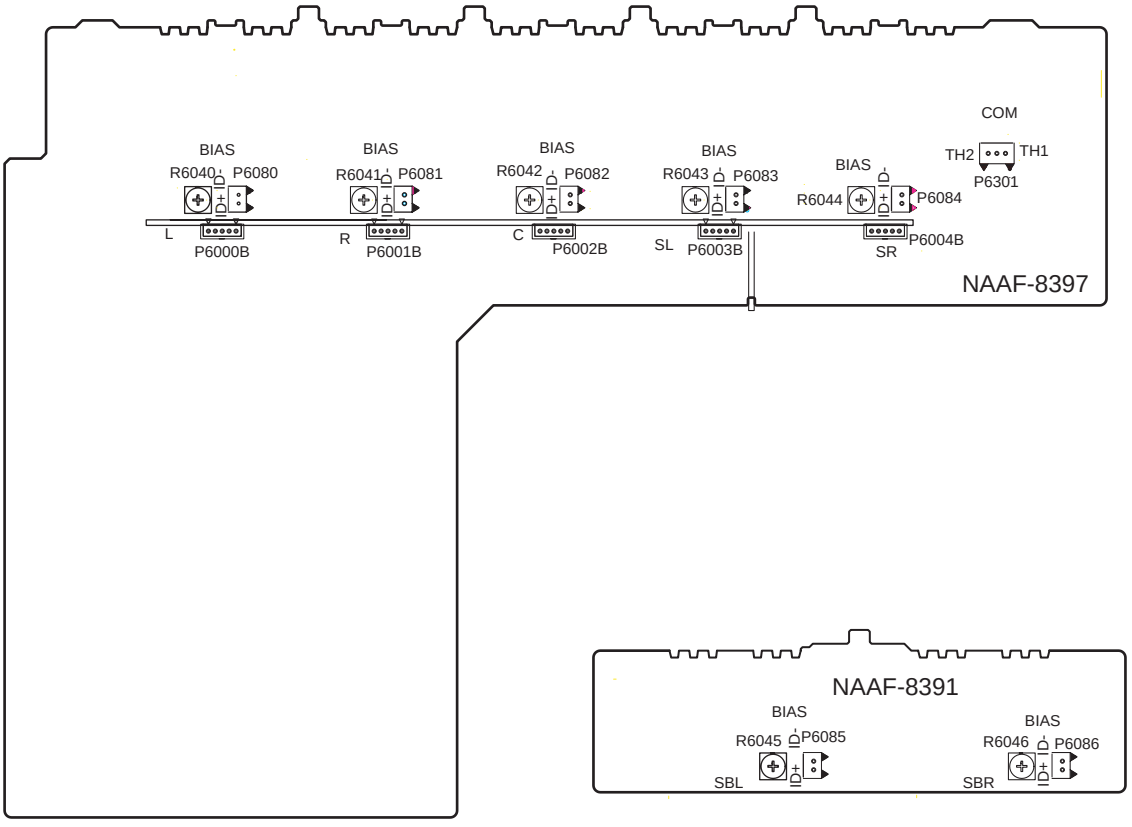

Confirmation of protection circuit

1. Confirmation of speaker relay

Confirm that the speaker relays turn ON approximately 5 seconds after the power switch is turned ON.
Confirm that the speaker relays turn OFF immediately after the power switch is turned OFF.

2. How to enter Test Mode

1. To enter a test mode (Test 1 to 4), when the unit is turned on,
   hold down "CD" + "DISPLAY" buttons and then press "STANDBY/ON" button.
2. Press the respective designated buttons and make sure that your target mode starts.

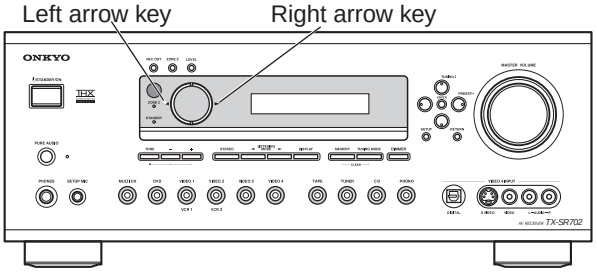

Mode	Button to be pressed	Message to be shown on the Front display
Test-1	"DVD"	"Test-1-00"
Test-2	"VIDEO 1"	"Test-2-00"
Test-3	"VIDEO 2"	"TUNER 82"
Test-4	"VIDEO 3"	"Test-4-00"

To move to the next step, press the right arrow key.
When you enter Test-3, it is necessary to press this button once to see "Test-3-00" is shown.
To move to the previous step, press the left arrow key.
To exit, press "STANDBY/ON" button.

3.Confirmation of protection circuit

Check of Voltage detection

1. Enter Test-4 mode.
2. Press and release the right arrow key repeatedly until "TEST-4-21" is shown on the Front display.
3. See your unit automatically start to check each channel.
   During the check, the message on the display is changing as follows:

Channel	1st Message	2nd Message
FL+	TEST-4-21	Protect OK
FR-	TEST-4-22	Protect OK
C+	TEST-4-23	Protect OK
SL-	TEST-4-24	Protect OK
SR+	TEST-4-25	Protect OK
SBL-	TEST-4-26	Protect OK
SBR+	TEST-4-27	Protect OK

   When the whole check is completed, "TEST-4-35" is shown.
4. Exit from the test mode.

Check of Current detection

1. Enter Test-4 mode.
2. Press and release the right arrow key repeatedly until "TEST-4-35" is shown on the Front display.
3. Connect a 3 ohm hollow resistor to a speaker terminal for each channel and
   make sure that the speaker relay would not cut off.
4. Connect a 1.5 ohm hollow resistor to a speaker terminal for each channel and
   make sure that the speaker relay would cut off.
5. Exit from the test mode.

4. Operation check of voltage sensor and thermal protector

1. Enter Test-4 mode.
2. Press and release the right arrow key repeatedly until "TEST-4-36" is shown on the front display.
3. Confirm that the FM STEREO indicator lights on and the relays of RL6901 and RL6902 turn OFF.
4. Press the right arrow key to set "TEST-4-37".
5. Confirm that the FM STEREO indicator lights on and the relays of RL6901 and RL6902 turn OFF.
6. Exit from the test mode.
7. Connect a metal oxide resistor 1.8 kohm/1W between "COM" and "TH2" terminals of P6302 with no input signal.
8. Set the unit to the test mode "TEST-1-00".
9. Confirm that "Thermal Protect" is displayed on the front display.

Test Mode of FL tube

To enter a test mode (Test 1 to 4), when the unit is turned on,
hold down "CD" + "DISPLAY" buttons and then press "STANDBY/ON" button.
After "TEST " on the FL tube is displayed, press CD button to set the unit to the test mode of FL tube.

Test mode of FL tube
Right arrow key....UP
Left arrow key.....DOWN

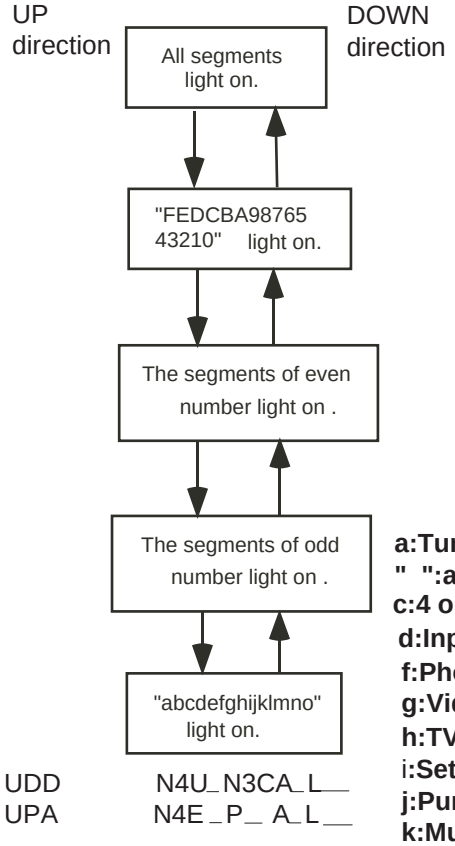

a:Tuner "U":USA and Canad "E":Europe "W":Worldiwde "J":Japan
" ":avaiable b:Amplifier ch, "5":5 ch "7":7 ch
c:4 ohm correspondence "4":Yes "6":No
d:Input numbers e:Front video: "F":Yes "N":No
f:Phono: "P":avaiable
g:Video converer function: "C":avaiable
h:TV format function :"N":NTSC "P":PAL/NTSC
i:Setup mic. function :"Y":avaiable
j:Pure audio function : "P":avaiable
k:Multi-ch. function "M":avaiable
l: Zone 2 output function "L":LINE "P": LINE/Preout
m12V trigger function:"Z":ZONE2 "A":A/B/C
n:IR input function:"i":Yes o:RS232C function:"R":Yes
Note: All functions " ": No avaiable

PACKING PROCEDURES

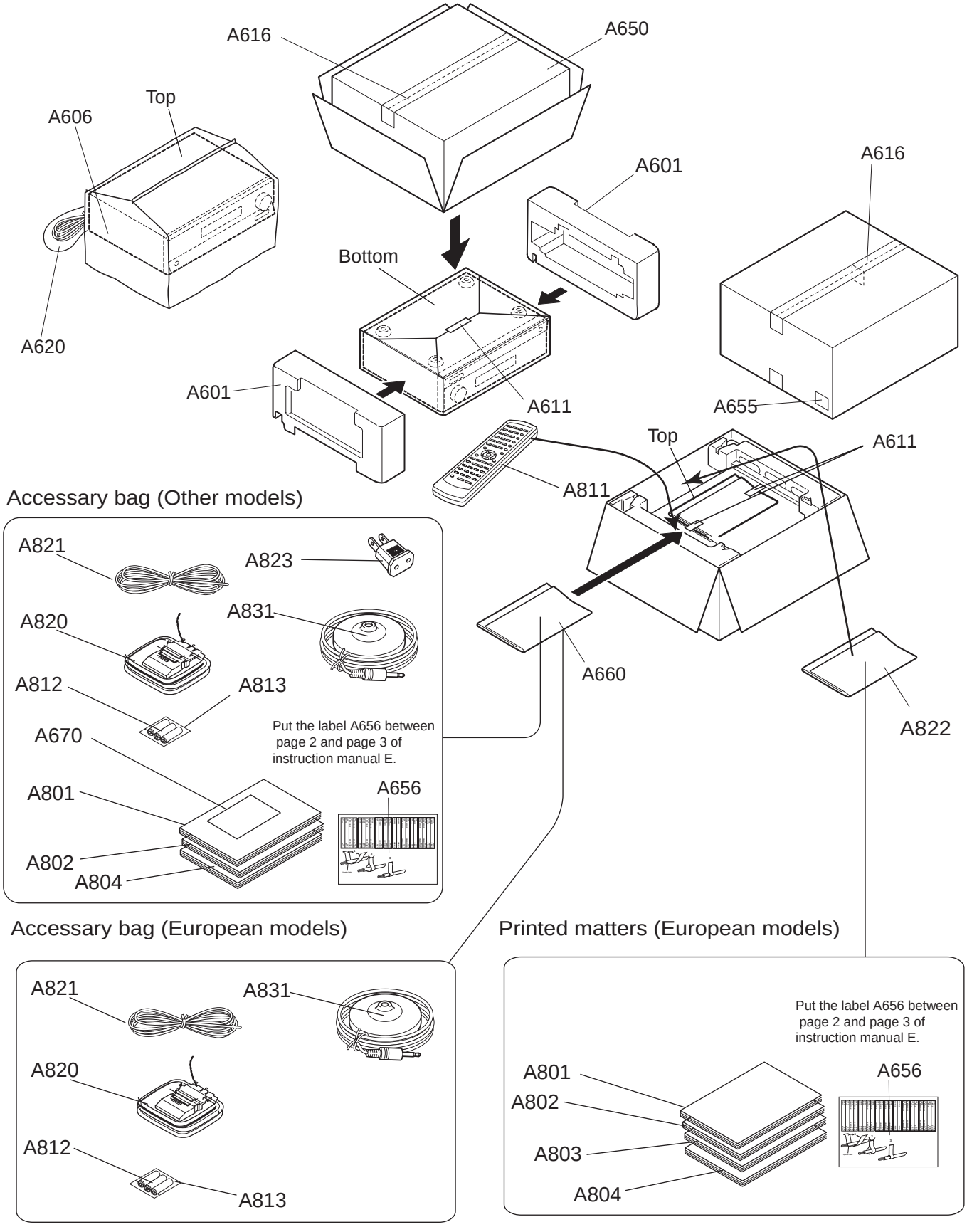

EXPLODED VIEW-PARTS LIST

NOTE: THE COMPONENTS IDENTIFIED BY MARK ! ARE CRITICAL FOR RISK OF FIRE AND ELECTRIC SHOCK. REPLACE ONLY WITH PART NUMBER SPECIFIED.

CAUTION: Replacement for transistor of mark *, if necessary must be made from the same beta group (h_{FE}) as the original type.

NOTE: <B>: Black model only <G>: Golden model only <S>: Silver model only <D>: USA model only <P>: European model only <A>:Australian model only <WT>: Worldwide model only <R>: Chinese model only <C>:Canadian model only <K>:Korean model only <PT>:Asian model only for 230V <O>:Except 120V model

REF. NO.	PART NO.		DESCRIPTION
A001	27111356A		Front bracket <B>
	27111357A		Front bracket <S>
	27111358A		Front bracket <G>
A002	28325497A		Knob,power <B> <PT/P>
	28325547A		Knob,power <S> <P>
	28325499A		Knob,power <G> <K/Q/R/PT/WT>
A005	801612		3TTB+8B(CU),Self-tapping screw
A006	28198990		Facet, Volume
A009	82143010		3P+10FN(BC),Pan head screw
A011	28326235A		Knob, ring
A012	27191130	!	Holder, outlet <R>
A013	27212681		Front panel <B> <D/C>
	27212682		Front panel <B> <A>
	27212683		Front panel <B> <WT>
	27212684		Front panel <B> <P>
	27212685		Front panel <S> <C>
	27212686		Front panel <S> <A>
	27212687		Front panel <S> <P>
	27212688		Front panel <G>
A016	28192039		Clear plate
A017	28135244		Badge <B>
	28135245		Badge <S/G>
A018	801618		3TTB+8B(CU)SR,Self-tapping screw
A021	28198778		Facet
A026	801618		3TTB+8B(CU)SR,Self-tapping screw
A029	838430088		3TTB+8B(BC),Self-tapping screw
A031	801618		3TTB+8B(CU)SR,Self-tapping screw
A033	27123310		Rear panel <D/C>
	27123311		Rear panel <P>
	27123312		Rear panel <WT>
	27123313		Rear panel <R>
	27123314		Rear panel <K>
	27123315		Rear panel <A>
	27123316		Rear panel <Q>
	27123317		Rear panel <PT>
A036	27255004		CS-1U,Clip
A037	838430088		3TTB+8B(BC),Self-tapping screw
A038	27130973		Bracket PT2
A039	28141620		Cushion
A041	27100450A		Chassis
A042	29110083		Tape, cloth
A043	29363194		Label,hookup <D/C>
A045	29362772		Label,cover
A046	27190369		KGLS-22S,Holder
A047	29363949		Label POP <D/C>
A050	28326232		Knob, volume <B> <A/WT/P>
	28326233		Knob, volume <S>
	28326234		Knob, volume <G>
	28326238		Knob, volume <B> <D/C>
A051	27191112		KGPS-6RF,Holder
A055	27190926		KGPS-18RF,Holder

REF. NO.	PART NO.		DESCRIPTION
A056	27190657		KGLS-18RT,Holder
A057	27190965		Holder
A059	260220		WS-3NS,Wire clamp
A070	830440089		4TTC+8C(BC),Self-tapping screw
A081	27130970		Bracket PT
A091	27160557B		Heat sink
A101	801606		3SMH10W.SW+15B(CU),Special screw
A151	27130745		Bracket
A161	830440089		4TTC+8C(BC),Self-tapping screw
A171	27300750	!	Bushing,cord
A176	28192040		Clear plate <B>
	28192041		Clear plate <S/G>
A186	838430088		3TTB+8B(BC),Self-tapping screw <B>
	838930088		3TTB+8B(UN),Self-tapping screw <G/S>
A187	28184903		Top cover <B>
	28184904		Top cover <S>
	28184905		Top cover <G>
A196	27175405		Leg
A201	28141599		Cushion
A206	801618		3TTB+8B(CU)SR,Self-tapping screw
A211	801606		3SMH10W.SW+15B(CU),Special screw
A216	29363408-1		Label PT
E800	260208		BSK-1,Wire tie
F6901,F6902	252301 or	!	12A-TUL-250V or
	252196	!	12A-UL/T-314,Fuse
F901	252199	!	10A-UL,Fuse <D/C/WT>
F902	252078,	!	5A-SE-EAK,
	252244 or	!	5A-SE-TL250V or
	252278	!	5A-SE-TL250V,Fuse <O>
F903	252164 or	!	5A-UL/T-237 or
	252258	!	5A-T/UL-ST2,Fuse <D/C>
	252075,	!	2.5A-SE-EAK,
	252241 or	!	2.5A-SE-TL250V or
	252275	!	2.5A-SE-TL250V,Fuse <O>
F9501	252160 or	!	2.5A-UL/T-237 or
	252254	!	2.5A-T/UL-ST2,Fuse <D/C>
	252075,	!	2.5A-SE-EAK,
	252241 or	!	2.5A-SE-TL250V or
	252275	!	2.5A-SE-TL250V,Fuse <O>
P6931	2045111012		NCFC5-111012,Flexible cable
P7501	2045235012		NCFC5-235012,Flexible cable
P7502	2047112012		NCFC7-112012,Flexible cable
P761	2047152512		NCFC7-152512,Flexible cable
P901	253368LTK,	!	AS-UC-2,
	253332HIT or	!	AS-UC-2 or
	253333VOL	!	AS-UC-2,Power supply cord <D/C>
	253233KAW or	!	AS-CEE-2 or
	253306VOL	!	AS-CEE-2,Power supply cord <P/WT/K/PT>
	253197HIT or	!	AS-SAA or
	253307VOL	!	AS-SAA,Power supply cord <A>
	253198HIT	!	AS-BS,Power supply cord <Q>
	253355VOL	!	AS-CCC,Power supply cord <R>
P902A	25052665	!	NSCT-2P2561,AC outlet <K>
Q6050A	223024		AC238,Isolated sheet
Q6050~Q6052	2202843 or	*	2SC5242-O or
	2202842	*	2SC5242-R,Transistor
Q6053~Q6056	2203663,	*	MN130S-O,
	2202842,	*	2SC5242-R,
	2202843,	*	2SC5242-O,
	2203664 or	*	MN130S-Y or
	2203666	*	MN130S-P,Transistor

REF. NO.	PART NO.		DESCRIPTION
Q6060~Q6062	2202833 or	*	2SA1962-O or
	2202832	*	2SA1962-R,Transistor
Q6063~Q6066	2203673,	*	MP130S-O,
	2202832,	*	2SA1962-R,
	2202833,	*	2SA1962-O,
	2203674 or	*	MP130S-Y or
	2203676	*	MP130S-P,Transistor
T901	2301769	!	NPT-1502D,Power transformer <D/C>
	2301770	!	NPT-1502P,Power transformer <P/A/PT>
	2301771	!	NPT-1502DG,Power transformer <WT/K/Q/R>
U1	1B041565-1L		NAAR-8365-1L,DSP and preamplifier PC board ass'y <D/C>
	1B041565-1M		NAAR-8365-1M,DSP and preamplifier PC board ass'y <P>
	1B041565-1N		NAAR-8365-1N,DSP and preamplifier PC board ass'y <A>
	1B041565-1P		NAAR-8365-1P,DSP and preamplifier PC board ass'y <PT/WT/K/Q/R>
U2	1B041566-1L		NADG-8366-1L,Main connector PC board ass'y <D/C>
	1B041566-1M		NADG-8366-1M,Main connector PC board ass'y <P>
	1B041566-1N		NADG-8366-1N,Main connector PC board ass'y <A>
	1B041566-1P		NADG-8366-1P,Main connector PC board ass'y <PT/WT/K/Q/R>
U3	1B041567-1L		NAETC-8367-1L,Control terminal PC board ass'y <D/C>
	1B041567-1M		NAETC-8367-1M,Control terminal PC board ass'y <P>
	1B041567-1N		NAETC-8367-1N,Control terminal PC board ass'y <A>
	1B041567-1P		NAETC-8367-1P,Control terminal PC board ass'y <PT/WT/K/Q/R>
U4	1B041568-1L		NADG-8368-1L,Digital input/output terminal PC board ass'y <D/C>
	1B041568-1M		NADG-8368-1M,Digital input/output terminal PC board ass'y <P>
	1B041568-1N		NADG-8368-1N,Digital input/output terminal PC board ass'y <A>
	1B041568-1P		NADG-8368-1P,Digital input/output terminal PC board ass'y <PT/WT/K/Q/R>
U5	1B041582-1L		NAPS-8382-1L,Primary circuit PC board ass'y <D/C>
	1B041582-1M		NAPS-8382-1M,Primary circuit PC board ass'y <P/PT>
	1B041582-1N		NAPS-8382-1N,Primary circuit PC board ass'y <A>
	1B041582-1P		NAPS-8382-1P,Primary circuit PC board ass'y <WT>
	1B041582-1Q		NAPS-8382-1Q,Primary circuit PC board ass'y <R>
	1B041582-1R		NAPS-8382-1R,Primary circuit PC board ass'y <Q>
	1B041582-1T		NAPS-8382-1T,Primary circuit PC board ass'y <K>
U6	1B041583-1L		NAAF-8383-1L,Driver circuit PC board ass'y <D/C>
	1B041583-1M		NAAF-8383-1M,Driver circuit PC board ass'y <P/PT>
	1B041583-1N		NAAF-8383-1N,Driver circuit PC board ass'y <A>
	1B041583-1P		NAAF-8383-1P,Driver circuit PC board ass'y <WT>
	1B041583-1Q		NAAF-8383-1Q,Driver circuit PC board ass'y <R>
	1B041583-1R		NAAF-8383-1R,Driver circuit PC board ass'y <Q>
	1B041583-1T		NAAF-8383-1T,Driver circuit PC board ass'y <K>
U7	1B041584-1L		NAETC-8384-1L,Transformer terminal PC board ass'y <D/C>
	1B041584-1M		NAETC-8384-1M,Transformer terminal PC board ass'y <P/PT>
	1B041584-1N		NAETC-8384-1N,Transformer terminal PC board ass'y <A>
	1B041584-1P		NAETC-8384-1P,Transformer terminal PC board ass'y <WT>
	1B041584-1Q		NAETC-8384-1Q,Transformer terminal PC board ass'y <R>
	1B041584-1R		NAETC-8384-1R,Transformer terminal PC board ass'y <Q>
	1B041584-1T		NAETC-8384-1T,Transformer terminal PC board ass'y <K>
U8	1B041585-1T		NAETC-8385-1T,Outlet terminal PC board ass'y <K>
U9	1B041586-1M		NAETC-8386-1M,Holder PC board for power switch <P/PT>
	1B041586-1P		NAETC-8386-1P,Holder PC board for power switch <WT>
	1B041586-1Q		NAETC-8386-1Q,Holder PC board for power switch <R>
	1B041586-1R		NAETC-8386-1R,Holder PC board for power switch <Q>
	1B041586-1T		NAETC-8386-1T,Holder PC board for power switch <K>
U10	1B041587-1M		NASW-8387-1M,Power switch PC board ass'y <P/PT>
	1B041587-1P		NASW-8387-1P,Power switch PC board ass'y <WT>
	1B041587-1Q		NASW-8387-1Q,Power switch PC board ass'y <R>
	1B041587-1R		NASW-8387-1R,Power switch PC board ass'y <Q>
	1B041587-1T		NASW-8387-1T,Power switch PC board ass'y <K>

REF. NO.	PART NO.	DESCRIPTION
U12	1B041589-1L	NAPS-8389-1L,Secondary circuit PC board ass'y <D/C>
	1B041589-1M	NAPS-8389-1M,Secondary circuit PC board ass'y <P/PT>
	1B041589-1N	NAPS-8389-1N,Secondary circuit PC board ass'y <A>
	1B041589-1P	NAPS-8389-1P,Secondary circuit PC board ass'y <WT>
	1B041589-1Q	NAPS-8389-1Q,Secondary circuit PC board ass'y <R>
	1B041589-1R	NAPS-8389-1R,Secondary circuit PC board ass'y <Q>
	1B041589-1T	NAPS-8389-1T,Secondary circuit PC board ass'y <K>
U13	1B041590-1L	NAETC-8390-1L,Fuse terminal PC board ass'y <D/C>
	1B041590-1M	NAETC-8390-1M,Fuse terminal PC board ass'y <P/PT>
	1B041590-1N	NAETC-8390-1N,Fuse terminal PC board ass'y <A>
	1B041590-1P	NAETC-8390-1P,Fuse terminal PC board ass'y <WT>
	1B041590-1Q	NAETC-8390-1Q,Fuse terminal PC board ass'y <R>
	1B041590-1R	NAETC-8390-1R,Fuse terminal PC board ass'y <Q>
	1B041590-1T	NAETC-8390-1T,Fuse terminal PC board ass'y <K>
U14	1B041591-1L	NAAF-8391-1L,Power amplifier PC board ass'y <D/C>
	1B041591-1M	NAAF-8391-1M,Power amplifier PC board ass'y <P/PT>
	1B041591-1N	NAAF-8391-1N,Power amplifier PC board ass'y <A>
	1B041591-1P	NAAF-8391-1P,Power amplifier PC board ass'y <WT>
	1B041591-1Q	NAAF-8391-1Q,Power amplifier PC board ass'y <R>
	1B041591-1R	NAAF-8391-1R,Power amplifier PC board ass'y <Q>
	1B041591-1T	NAAF-8391-1T,Power amplifier PC board ass'y <K>
U16	1B041597-1L	NAAF-8397-1L,Power amplifier PC board ass'y <D/C>
	1B041597-1M	NAAF-8397-1M,Power amplifier PC board ass'y <P/PT/WT/A/R/Q>
	1B041597-1T	NAAF-8397-1T,Power amplifier PC board ass'y <K>
U17	1B041598-1L	NAETC-8398-1L,Secondary cirucit PC board ass'y <D/C>
	1B041598-1M	NAETC-8398-1M,Secondary cirucit PC board ass'y <P/PT/WT/A/R/Q>
	1B041598-1T	NAETC-8398-1T,Secondary cirucit PC board ass'y <K>
U18	1B041599-1L	NAETC-8399-1L,Speaker terminal PC board ass'y
	1B041599-1M	NAETC-8399-1M,Speaker terminal PC board ass'y
	1B041599-1T	NAETC-8399-1T,Speaker terminal PC board ass'y
U19	1B041500-1L	NAETC-8400-1L,Speaker terminal F/C PC board ass'y <D/C>
	1B041500-1M	NAETC-8400-1M,Speaker terminal F/C PC board ass'y <P/PT/WT/A/R/Q>
	1B041500-1T	NAETC-8400-1T,Speaker terminal F/C PC board ass'y <K>
U21	1B041502-1L	NAETC-8402-1L,Thermal detector PC board ass'y <D/C>
	1B041502-1M	NAETC-8402-1M,Thermal detector PC board ass'y <P/PT/WT/A/R/Q>
	1B041502-1T	NAETC-8402-1T,Thermal detector PC board ass'y <K>
U22	1B041503-1L	NAETC-8403-1L,Holder PC board ass'y <D/C>
	1B041503-1M	NAETC-8403-1M,Holder PC board ass'y <P/PT/WT/A/R/Q>
	1B041503-1T	NAETC-8403-1T,Holder PC board ass'y <K>
U23	1B041504-1L	NAETC-8404-1L,PC board for cord clamp <D/C>
	1B041504-1M	NAETC-8404-1M,PC board for cord clamp <P/PT/WT/A/R/Q>
	1B041504-1T	NAETC-8404-1T,PC board for cord clamp <K>
U26	1B041506-1L	NADIS-8406-1L,Display circuit PC board ass'y <D/C>
	1B041506-1M	NADIS-8406-1M,Display circuit PC board ass'y <PT/WT/K/Q/R>
	1B041506-1T	NADIS-8406-1T,Display circuit PC board ass'y <P/A>
U27	1B041507-1L	NAVD-8407-1L,Video terminal PC board ass'y <D/C>
	1B041507-1M	NAVD-8407-1M,Video terminal PC board ass'y <PT/WT/K/Q/R>
	1B041564-1M	NAVD-8464-1M,Video terminal PC board ass'y <P>
	1B041564-2L	NAVD-8464-2L,Video terminal PC board ass'y <A>
U29	1B041509-1L	NAVD-8409-1L,Video 4 terminal PC board ass'y <D/C>
	1B041509-1M	NAVD-8409-1M,Video 4 terminal PC board ass'y <PT/WT/K/Q/R>
	1B041509-1T	NAVD-8409-1T,Video 4 terminal PC board ass'y <P/A>
U30	1B041510-1L	NADG-8410-1L,Front opt. terminal PC board ass'y <D/C>
	1B041510-1M	NADG-8410-1M,Front opt. terminal PC board ass'y <PT/WT/K/Q/R>
	1B041510-1T	NADG-8410-1T,Front opt. terminal PC board ass'y <P/A>
U31	1B041511-1L	NASW-8411-1L,Volume PC board ass'y <D/C>
	1B041511-1M	NASW-8411-1M,Volume PC board ass'y <PT/WT/K/Q/R>
	1B041511-1T	NASW-8411-1T,Volume PC board ass'y <P/A>
U32	1B041512-1L	NAETC-8412-1L,Headphone terminal PC board ass'y <D/C>
	1B041512-1M	NAETC-8412-1M,Headphone terminal PC board ass'y <PT/WT/K/Q/R>
	1B041512-1T	NAETC-8412-1T,Headphone terminal PC board ass'y <P/A>

REF. NO.	PART NO.	DESCRIPTION
U33	1B041513-1L	NAETC-8413-1L,Holder PC board <D/C>
	1B041513-1M	NAETC-8413-1M,Holder PC board <PT/WT/K/Q/R>
	1B041513-1T	NAETC-8413-1T,Holder PC board <P/A>
U36	240138A,	ENG06501QR,
	240146 or	FAE385-A02F or
	240134A	TFCE1U114B,Tuner unit <D/C>
	240147,	FAE485-E02F,
	240139A or	ENG07501QR or
	240135	TFCE1E512A,Tuner unit <P/PT/WT/A/K/R/Q>

PACKING VIEW-PARTS LIST

REF. NO.	PART NO.	DESCRIPTION
A601	29092213A	Pad
A606	29100153	1020x770,Polybag
A611	29110149	Tape, cellophane
A616	29110148	Tape PP
A620	29100097-1A	350*250,Polybag
A650	29054249	Carton box <D>
	29054250	Carton box <B> <WT/C/A>
	29054251	Carton box <B> <P>
	29054252	Carton box <S> <A/C>
	29054253	Carton box <S> <P>
	29054254	Carton box <G> <PT/WT/K/Q>
	29054261	Carton box <G> <R>
A655	29363892	Label EAN <B> <P>
	29363893	Label EAN <S> <P>
	29363894	Label EAN <B> <WT/A>
	29363895	Label EAN <S> <A>
	29363896	Label EAN <G>
	29363898	Label UPC <B> <D/C>
	29363899	Label UPC <S> <C>
A656	29363059A	Label,speaker cable
A660	29100097-1A	350*250,Polybag
A670	29365098	Warranty card <R>
	29365099	Warranty card <Q>
	29365090B	Warranty card <D/C>
A801	29343831C	Instruction manual En
A802	29343832A	Instruction manual FrEs <C/P>
	29343833	Instruction manual Ct <WT/PT/Q/R>
A803	29343830	Instruction manual ItDe <P>
A804	29343908	Instruction manual NlSv <P>
	29355471	Instruction manual digest <D>
A811	24140590	RC-590M,Remote controller <D/C>
	24140591	RC-591M,Remote controller <O>
A812	3010054	R6/AA(UM-3),Battery
A813	29100217	t0.1*70*100,Polybag
A820	232140	NMA-3057,AM loop antenna
A821	292191	FM antenna
A822	29100097-1A	350*250,Poly bag <P>
A823	25056005	CV-K-1,Conversion plug <WT>
A831	245038	MIC-4000,Microphone

EXPLODED VIEW-PARTS LIST

NOTE: THE COMPONENTS IDENTIFIED BY MARK ! ARE CRITICAL FOR RISK OF FIRE AND ELECTRIC SHOCK. REPLACE ONLY WITH PART NUMBER SPECIFIED.

CAUTION: Replacement for transistor of mark *, if necessary must be made from the same beta group (h_{FE}) as the original type.

REF. NO.	PART NO.		DESCRIPTION
A001	27111358A		Front bracket
A002	28325499A		Knob ,Power
A005	801618		3TTB+8B(CU)SR,Self-tapping screw
A006	28198990		Facet, volume
A009	82143010		3P+10FN(BC),Pan head screw
A011	28326235A		Knob, ring
A012	27191130	!	Holder, outlet
A013	27212690		Front panel
A016	28192039		Clear plate, ring
A017	28135245		Badge
A021	28198778		Facet
A026	801618		3TTB+8B(CU)SR,sSelf-tapping screw
A029	838430088		3TTB+8B(BC),Self-tapping screw
A031	801618		3TTB+8B(CU)SR,Self-tapping screw
A033	27123318		Rear panel
A036	27255004		CS-1U,Clip
A037	838430088		3TTB+8B(BC),Self-tapping screw
A038	27130973		Bracket PT-2
A039	801618		3TTB+8B(CU)SR,Self-tapping screw
A039	28141620		Cushion
A041	27100450A		Chassis
A042	29110083		Tape, cloth
A045	29362772		Label, Cover
A046	27190369		KGLS-22S,Holder
A050	28326234		Knob, volume
A051	27191112		KGPS-6RF,Holder
A055	27190926		KGPS-18RF,Holder
A057	27190965		Holder
A059	260220		WS-3NS,Wire holder
A070	830440089		4TTC+8C(BC),Self-tapping screw
A081	27130970		Bracket PT
A091	27160557B		Heat sink
A101	801606		3SMH10W.SW+15B(CU),Self-tapping screw
A151	27130745		Bracket
A171	27300750	!	Bushing, cord
A176	28192041		Clear plate
A186	838930088		3TTB+8B(UN),Self-tapping screw
A187	28184905		Top cover
A196	27175405		Leg
A201	28141599		Cushion
A206	801618		3TTB+8B(CU)SR,Self-tapping screw
A211	801606		3SMH10W.SW+15B(CU),Self-tapping screw
A216	29363408-1		Label PT
E800	260208		BSK-1,Wire tie
F6901,F6902	252301 or	!	12A-TUL-250V or
	252196	!	12A-UL/T-314,Fuse
F902	252078,	!	5A-SE-EAK,
	252244 or	!	5A-SE-TL250V or
	252278	!	5A-SE-TL250V,Fuse
F903	252075,	!	2.5A-SE-EAK,
	252241 or	!	2.5A-SE-TL250V or
	252275	!	2.5A-SE-TL250V,Fuse

REF. NO.	PART NO.		DESCRIPTION
F9501	252075,	!	2.5A-SE-EAK,
	252241 or	!	2.5A-SE-TL250V or
	252275	!	2.5A-SE-TL250V,Fuse
P6931	2045111012		NCFC5-111012,Flexible cable
P7501	2045235012		NCFC5-235012,Flexible cable
P7502	2047112012		NCFC7-112012,Flexible cable
P761	2047151512		NCFC7-151512,flexible cable
P901	253355VOL	!	AS-CCC, Power supply cord
Q6050~Q6052	2202843 or	*	2SC5242-O or
	2202842	*	2SC5242-R,Transistor
Q6050A	223024		AC238,Isolated plate
Q6053~Q6056	2203663,	*	MN130S-O,
	2203664,	*	MN130S-Y,
	2203666,	*	MN130S-P,
	2202843 or	*	2SC5242-O or
	2202842	*	2SC5242-R,Transistor
Q6060~Q6062	2202833 or	*	2SA1962-O or
	2202832	*	2SA1962-R,Transistor
Q6063~Q6066	2203673,	*	MP130S-O,
	2203674,	*	MP130S-Y,
	2203676,	*	MP130S-P,
	2202833 or	*	2SA1962-O or
	2202832	*	2SA1962-R,Transistor
T901	2301771	!	NPT-1502DG,Power transformer
U1	1B041565-1P		NAAR-8365-1P,DSP and preamplifier PC board ass'y
U2	1B041566-1P		NADG-8366-1P,Main connector PC board ass'y
U3	1B041567-1P		NAETC-8367-1P,Control terminal PC board ass'y
U4	1B041568-1P		NADG-8368-1P,Digital input/output terminal PC board ass'y
U5	1B041582-1Q		NAPS-8382-1Q,Primary circuit PC board ass'y
U6	1B041583-1Q		NAAF-8383-1Q,Driver circuit PC board ass'y
U7	1B041584-1Q		NAETC-8384-1Q,Transformer terminal PC board ass'y
U9	1B041586-1Q		NAETC-8386-1Q,Holder PC board for power switch
U10	1B041587-1Q		NASW-8387-1Q,Power switch PC board ass'y
U12	1B041589-1Q		NAPS-8389-1Q,Secondary circuit PC board ass'y
U13	1B041590-1Q		NAETC-8390-1Q,Fuse terminal PC board ass'y
U14	1B041591-1Q		NAAF-8391-1Q,Power amplifier PC board ass'y
U16	1B041597-1M		NAAF-8397-1M,Power amplifier PC board ass'y
U17	1B041598-1M		NAETC-8398-1M,Secondary circuit PC board ass'y
U18	1B041599-1M		NAETC-8399-1M,Speaker terminal PC board ass'y
U19	1B041500-1M		NAETC-8400-1M,Speaker terminal F/C PC board ass'y
U21	1B041502-1M		NAETC-8402-1M,Thermal detector PC board ass'y
U22	1B041503-1M		NAETC-8403-1M,Holder PC board ass'y
U23	1B041504-1M		NAETC-8404-1M,PC board for cord clamp
U26	1B041506-1M		NADIS-8406-1M,Display circuit PC board ass'y
U27	1B041507-1M		NAVD-8407-1M,Video terminal PC board ass'y
U29	1B041509-1M		NAVD-8409-1M,Video 4 terminal PC board ass'y
U30	1B041510-1M		NADG-8410-1M,Front opt. terminal PC board ass'y
U31	1B041511-1M		NASW-8411-1M,Volume PC board ass'y
U32	1B041512-1M		NAETC-8412-1M,Headphone terminal PC board ass'y
U33	1B041513-1M		NAETC-8413-1M,Holder PC board
U36	240135		TFCE1E512A,Tuner unit

PACKING VIEW-PARTS LIST

REF. NO.	PART NO.	DESCRIPTION
A601	29092213A	Pad
A606	29100153	1020x770,Polybag
A611	29110149	Tape, cellophane
A616	29110148	Tape PP
A650	29054262	Carton box
A620	29100097-1A	350*250,Polybag
A655	29363897	Label EAN
A656	29363059A	Label, speaker cable
A660	29100097-1A	350*250,Polybag
A670	29365098A	Warranty card
A801	29343831C	Instruction manual En
A802	29343834	Instruction manual Cs
A811	24140591	RC-591M,Remote controller
A812	3010054	R6/AA(UM-3), Battery
A813	29100217	t0.1*70*100,Polybag
A820	232140	NMA-3057,AM loop antenna
A821	292191	FM antenna
A831	245038	MIC-4000,Microphone

PRINTED CIRCUIT BOARD-PARTS LIST

NOTE: THE COMPONENTS IDENTIFIED BY MARK ! ARE CRITICAL FOR RISK OF FIRE AND ELECTRIC SHOCK. REPLACE ONLY WITH PART NUMBER SPECIFIED.

CAUTION: Replacement for transistor of mark *, if necessary must be made from the same beta group (h**FE**) as the original type.

NOTE: <D>:120V model only <PT>:Asian model for 230V
<P>:European model only <WT>:Worldwide model only
<A>:Australian model only <Q>:Hong Kong model only
<R>:Chinese model only <O>:Except 120V model
<K>: Korean model only

DSP and preamplifier PC board (NAAR-8365-1L/1M/1N/1P)

CIRCUIT NO.	PART NO.	DESCRIPTION
	ICs	
Q201	22242165R3	CS494003CQZ(CSSS)
Q202	22242123R3 or	IC42S16100 or
	22242152R2 or	K4S161622H-UC60 or
	22242123R2	IC42S16100
Q203	W0023R301386M100	MX29LV040TC-90
Q302	22242193R3 or	NJW1157B (After change)
Q303	222780073R2	78L07(SMT)
Q304	222790073R2	79L07(SMT)
Q305	22242099R2	TC9162BFG
Q306,Q307	22241383R2 or	NJM4565M-D or
Q501,Q502,Q503	22240581R2	NJM4565M
Q504	22241383R2 or	NJM4565M-D or
	22240581R2	NJM4565M
Q505,Q506	22241383R2 or	NJM4565M-D or
Q507	22240581R2	NJM4565M <P>
Q681	22274541ER2TO or	TC74VHC541FT or
	22274541IR2TI	SN74AHC541PWR
Q682	222740077R2TO	TC74HCT7007AF
Q861	22242168R3 or	CS42518-CQZR-C or
	22242168R2	CS42518-CQZR-C
Q862	22240935R2	TC7WU04FU
Q901	222780124TOS or	TA7812S or
	222780125	78M12HF
Q902	222790124TOS or	TA79012S or
	222790125	79M12HF
Q903	222780053R2JR	NJM78L05UA
Q910	222790054TOS or	TA79005S or
	222790055	79M05FA
Q911	222780053R2JR	NJM78L05UA
Q921	22278033DR2JR or	NJM2391DL1-33 or
	22278033DR2NE	MPC2933T
Q922	22278025DR2JR or	NJM2391DL1-25 or
	22278025DR2NE	MPC2925T
	Transistors	
Q402,Q404,Q406	2215410R2	RN1441
Q408,Q410,Q412	2215410R2	RN1441
Q414,Q415,Q416	2215410R2	RN1441
Q427,Q429	2215410R2	RN1441
Q904	2202314	2SA1726-Y
Q905	2212855 or	2SB1068-U or
	2212853	2SB1068-K <O>
Q906	2215024	2SD1468S-R <O>
Q907	2216190R2 or	KRC102S or
	2214470R2	RN1402 <O>
Q908	2216220R2 or	KRA102S or
	2214530R2	RN2402 <P>
Q909	2202314	2SA1726-Y

CIRCUIT NO.	PART NO.	DESCRIPTION
	Diodes	
D861,D862,D863	223234R2 or	1SS352 or
D864,D865,D866	223269R2	1SS355
D867,D868,D901	223234R2 or	1SS352 or
D902	223269R2	1SS355
	Coils	
L201,L202	231237K022R2	NCH-1471
L203,L204,L205	233533M022R2 or	NCH-1587-022M or
L203,L204,L205	231237K022R2	NCH-1471
L211	230959R1	BK1608LL241-T
L861,L862	233533M022R2 or	NCH-1587-022M or
L863,L864	231237K022R2	NCH-1471
L865	230958R1	BK1608LM182-T
L866	233533M022R2 or	NCH-1587-022M or
L866 or	231237K022R2	NCH-1471
L867,L868	230958R1	BK1608LM182-T
L921	233533K022R2 or	NCH-1587-022K or
L921 or	231237K022R2	NCH-1471
	Oscillator	
X801	3010324R2	CSTCV12.2MTJ0C4
	Capacitors	
C201	395640227R2	CS772SB1C-2.2M,Chip tantal
C202	347341224R2	CC732CH1H-122J,Chip ceramic
C203	342106804R1	CC725CH1H-680J1,Chip ceramic
C204,C205,C206	332161040R1	CK725F1E-104Z1,Chip ceramic
C207,C208,C209	332161040R1	CK725F1E-104Z1,Chip ceramic
C210,C211,C212	332161040R1	CK725F1E-104Z1,Chip ceramic
C213,C214,C215	332161040R1	CK725F1E-104Z1,Chip ceramic
C216	342101014R1	CC725CH1H-101J1,Chip ceramic
C217,C218,C281	394644707 or	CE04W16V-47M(VR) or
C217,C218,C281	394744707	CE04W16V47M(SC),Elect.
C219	394680107 or	CE04W50V-1M(VR) or
C219 or	394780107	CE04W50V1.0M(SC),Elect.
C282,C283,C284	332161040R1	CK725F1E-104Z1,Chip ceramic
C285,C286,C287	332161040R1	CK725F1E-104Z1,Chip ceramic
C291	394644707 or	CE04W16V-47M(VR) or
C291 or	394744707	CE04W16V47M(SC),Elect.
C292,C302	332161040R1	CK725F1E-104Z1,Chip ceramic
C303,C304,C305	332161040R1	CK725F1E-104Z1,Chip ceramic
C309,C310,C313	342102214R1	CC725CH1H-221J1,Chip ceramic
C314,C315,C316	342102214R1	CC725CH1H-221J1,Chip ceramic
C319,C320,C323	342102214R1	CC725CH1H-221J1,Chip ceramic
C324,C325,C326	342102214R1	CC725CH1H-221J1,Chip ceramic
C327,C328	342102214R1	CC725CH1H-221J1,Chip ceramic
C329,C330	342102214R1	CC725CH1H-221J1,Chip ceramic
C351,C352	332161040R1	CK725F1E-104Z1,Chip ceramic
C353,C354	394642217 or	CE04W16V-220M(VR) or
C353,C354	394742217	CE04W16V220M(SC),Elect.
C355,C358	393380477	CE04W50V-4.7M(VX),Elect.
C356,C359	375522244	MMT50V-224J,Plastic
C357,C360	373044724R2	ECHU16V-472J,Chip film
C364,C365	332161040R1	CK725F1E-104Z1,Chip ceramic
C366,C367,C368	393344707	CE04W16V-47M(VX),Elect.
C369,C370,C371	393344707	CE04W16V-47M(VX),Elect.
C372,C373	393344707	CE04W16V-47M(VX),Elect.
C374,C375	393341007	CE04W16V-10M(VX),Elect.
C376,C377	394641007 or	CE04W16V-10M(VR) or
C378,C379	394741007	CE04W16V10M(SC),Elect.
C380	394680107 or	CE04W50V-1M(VR) or
C380 or	394780107	CE04W16V10M(SC),Elect.
C381,C382	342103304R1	CC725CH1H-330J1,Chip ceramic
C383,C384	394644707 or	CE04W16V-47M(VR) or
C383,C384	394744707	CE04W16V47M(SC),Elect.

CIRCUIT NO.	PART NO.	DESCRIPTION
	Capacitors	
C388	393341007	CE04W16V-10M(VX),Elect.
C389	342102214R1	CC725CH1H-221J1,Chip ceramic
C390	373041034R2	ECHU16V-103J,Chip film
C391	375521034	MMT50V-103J,Plastic
C401,C402	393344707	CE04W16V-47M(VX),Elect.
C403,C404	393344707	CE04W16V-47M(VX),Elect.
C405,C406,C407	393344707	CE04W16V-47M(VX),Elect.
C408	393381007	CE04W50V-10M(VX),Elect.
C421,C422,C423	393341007	CE04W16V-10M(VX),Elect.
C424,C425,C426	393341007	CE04W16V-10M(VX),Elect.
C427,C428	393341007	CE04W16V-10M(VX),Elect.
C439,C440	393380477	CE04W50V-4.7M(VX),Elect.
C443,C444	342111024R1	CC725CH1E-102J1,Chip ceramic
C450	332161040R1	CK725F1E-104Z1,Chip ceramic
C501,C502	373044724R2	ECHU16V-472J,Chip film <D/A/PT/WT/K/Q/R>
C503	373044724R2	ECHU16V-472J,Chip film
C504	374723334	ECQ-V50V-333J,Plastic
C505,C506	373044724R2	ECHU16V-472J,Chip film
C507,C508	373044724R2	ECHU16V-472J,Chip film
C509,C510,C518	342106814R1	CC725CH1H-681J1,Chip ceramic <D/A/PT/WT/K/R/Q>
	342101014R1	CC725CH1H-101J1,Chip ceramic <P>
C511,C513,C514	342106814R1	CC725CH1H-681J1,Chip ceramic
C515,C516,C517	342106814R1	CC725CH1H-681J1,Chip ceramic
C519,C521,C522	342106814R1	CC725CH1H-681J1,Chip ceramic
C523,C524	342106814R1	CC725CH1H-681J1,Chip ceramic
C525,C526	373022724R2	ECHU50V-272J,Chip film <P>
C533,C534	373021224R2	ECHU50V-122J,Chip film <P>
C541,C542	394642217 or	CE04W16V-220M(VR) or
	394742217	CE04W16V220M(SC),Elect.
C543,C544	374721534	ECQ-B50V-153J,Plastic
C681,C682	332161040R1	CK725F1E-104Z1,Chip ceramic
C861,C862	393341007	CE04W16V-10M(VX),Elect.
C863,C864	393341007	CE04W16V-10M(VX),Elect.
C865,C866	373022224R2	ECHU50V-222J,Chip film
C867	394642217	CE04W16V-220M(VR),Elect.
C868,C869,C871	332161040R1	CK725F1E-104Z1,Chip ceramic
C870	395954707	CE04W25V-47M(RFS),Elect.
C872,C878	394621017	CE04W6.3V-100M(VR),Elect.
C874	394642217	CE04W16V-220M(VR),Elect.
C875	332102225R1	CK725B1H-222K1,Chip ceramic
C876	332104735R1	CK725B1H-473K1,Chip ceramic
C877	332161040R1	CK725F1E-104Z1,Chip ceramic
C879	332161040R1	CK725F1E-104Z1,Chip ceramic
C880,C881,C882	342103304R1	CC725CH1H-330J1,Chip ceramic
C883,C886	342103304R1	CC725CH1H-330J1,Chip ceramic
C884	342103304R1	CC725CH1H-330J1,Chip ceramic <D>
C886	342103304R1	CC725CH1H-330J1,Chip ceramic
C888,C889	332161040R1	CK725F1E-104Z1,Chip ceramic
C901	332152230R1	CK725F1H-223Z1,Chip ceramic
C902	394662207 or	CE04W35V-22M(VR) or
	394762207	CE04W35V22M(SC),Elect.
C904,C905,C907	394641007 or	CE04W16V-10M(VR) or
	394741007	CE04W16V10M(SC),Elect.
C906,C908	332161040R1	CK725F1E-104Z1,Chip ceramic
C909	394681007 or	CE04W50V-10M(VR) or
	394781007 or	CE04W50V10M(SC) or
	393381007	CE04W50V-10M(VX),Elect.
C911,C912	394641007 or	CE04W16V-10M(VR) or
	394741007	CE04W16V10M(SC),Elect.
C921,C923,C924	394644707 or	CE04W16V-47M(VR) or
	394744707	CE04W16V47M(SC),Elect.

CIRCUIT NO.	PART NO.	DESCRIPTION
	Resistors	
R201,R202	435033324R1	RN72K1J-332JE,Chip carbon
R203,R204,R205	435032214R1	RN72K1J-221JE,Chip carbon
R206,R207,R208	435032214R1	RN72K1J-221JE,Chip carbon
R209,R210,R211	435033324R1	RN72K1J-332JE,Chip carbon
R212,R213	435033324R1	RN72K1J-332JE,Chip carbon
R214,R215	435032214R1	RN72K1J-221JE,Chip carbon
R217,R218	435032214R1	RN72K1J-221JE,Chip carbon
R219	435033324R1	RN72K1J-332JE,Chip carbon
R221,R222,R223	435034704R1	RN72K1J-470JE,Chip carbon
R224,R225,R226	435034704R1	RN72K1J-470JE,Chip carbon
R227,R228	435034704R1	RN72K1J-470JE,Chip carbon
R229	435031034R1	RN72K1J-103JE,Chip carbon
R230,R231,R232	435034704R1	RN72K1J-470JE,Chip carbon
R233,R234,R235	435034704R1	RN72K1J-470JE,Chip carbon
R236,R237,R238	435034704R1	RN72K1J-470JE,Chip carbon
R239,R240	435034704R1	RN72K1J-470JE,Chip carbon
R241,R242	435034704R1	RN72K1J-470JE,Chip carbon
R243,R244	435030004R1	RN72K1J-000JE,Chip carbon
R249	435033314R1	RN72K1J-331JE,Chip carbon
R250	435032724R1	RN72K1J-272JE,Chip carbon
R251,R252,R253	435031034R1	RN72K1J-103JE,Chip carbon
R254,R255,R256	435031034R1	RN72K1J-103JE,Chip carbon
R257,R258,R259	435031034R1	RN72K1J-103JE,Chip carbon
R260,R261,R262	435031034R1	RN72K1J-103JE,Chip carbon
R263,R264,R265	435031034R1	RN72K1J-103JE,Chip carbon
R266,R267,R268	435031034R1	RN72K1J-103JE,Chip carbon
R269,R270,R271	435031034R1	RN72K1J-103JE,Chip carbon
R272,R273,R274	435031034R1	RN72K1J-103JE,Chip carbon
R275,R276,R277	435031034R1	RN72K1J-103JE,Chip carbon
R278	435032214R1	RN72K1J-221JE,Chip carbon
R279	435034704R1	RN72K1J-470JE,Chip carbon
R281	435031034R1	RN72K1J-103JE,Chip carbon
R291,R292	435032214R1	RN72K1J-221JE,Chip carbon
R303,R304,R305	435033314R1	RN72K1J-331JE,Chip carbon
R306,R307,R308	435033314R1	RN72K1J-331JE,Chip carbon
R309,R310,R311	435033314R1	RN72K1J-331JE,Chip carbon
R312,R313,R314	435033314R1	RN72K1J-331JE,Chip carbon
R315,R316,R317	435033314R1	RN72K1J-331JE,Chip carbon
R318,R319,R320	435033314R1	RN72K1J-331JE,Chip carbon
R321,R322,R323	435033314R1	RN72K1J-331JE,Chip carbon
R324	435033314R1	RN72K1J-331JE,Chip carbon
R329,R330,R335	435035634R1	RN72K1J-563JE,Chip carbon
R336,R339,R340	435035634R1	RN72K1J-563JE,Chip carbon
R345,R346,R347	435035634R1	RN72K1J-563JE,Chip carbon
R348	435035634R1	RN72K1J-563JE,Chip carbon
R349,R350	435033314R1	RN72K1J-331JE,Chip carbon
R371,R372	435031224R1	RN72K1J-122JE,Chip carbon
R373,R374	435034714R1	RN72K1J-471JE,Chip carbon
R375,R376,377	435031034R1	RN72K1J-103JE,Chip carbon
R378,R379,R380	435031034R1	RN72K1J-103JE,Chip carbon
R385	435034734R1	RN72K1J-473JE,Chip carbon
R386	435031224R1	RN72K1J-122JE,Chip carbon
R387	435031534R1	RN72K1J-153JE,Chip carbon
R388	435031034R1	RN72K1J-103JE,Chip carbon
R401,R402,R403	435032224R1	RN72K1J-222JE,Chip carbon
R404,R405	435032224R1	RN72K1J-222JE,Chip carbon
R406,R407	435032224R1	RN72K1J-222JE,Chip carbon
R408	435032714R1	RN72K1J-271JE,Chip carbon
R409,R410,R411	435031014R1	RN72K1J-101JE,Chip carbon
R412,R413,R414	435031014R1	RN72K1J-101JE,Chip carbon
R415,R416	435031014R1	RN72K1J-101JE,Chip carbon
R417,R418,R419	435032234R1	RN72K1J-223JE,Chip carbon

CIRCUIT NO.	PART NO.	DESCRIPTION
	Resistors	
R420,R421,R422	435032234R1	RN72K1J-223JE,Chip carbon
R423	435032234R1	RN72K1J-223JE,Chip carbon
R425	435030004R1	RN72K1J-000JE,Chip carbon
R427,R428	435031044R1	RN72K1J-104JE,Chip carbon
R433,R434,R435	435030004R1	RN72K1J-000JE,Chip carbon
R436,R437,R438	435030004R1	RN72K1J-000JE,Chip carbon
R459,R460,R461	435030004R1	RN72K1J-000JE,Chip carbon
R462,R479,R480	435030004R1	RN72K1J-000JE,Chip carbon
R485,R486	435032224R1	RN72K1J-222JE,Chip carbon
R487,R488	435032234R1	RN72K1J-223JE,Chip carbon
R489,R490	435032224R1	RN72K1J-222JE,Chip carbon
R498	435031044R1	RN72K1J-104JE,Chip carbon
R499	435033314R1	RN72K1J-331JE,Chip carbon
R501,R502,R503	435033324R1	RN72K1J-332JE,Chip carbon
R504,R505,R506	435033324R1	RN72K1J-332JE,Chip carbon
R507,R508,R509	435033324R1	RN72K1J-332JE,Chip carbon
R510,R11,R512	435033324R1	RN72K1J-332JE,Chip carbon
R513,R514	435033324R1	RN72K1J-332JE,Chip carbon
R515,R516	435033324R1	RN72K1J-332JE,Chip carbon
R517,R518	435034714R1	RN72K1J-471JE,Chip carbon <D/A/PT/WT/K/R/Q>
R519,R520,R521	435034714R1	RN72K1J-471JE,Chip carbon
R522,R523,R524	435034714R1	RN72K1J-471JE,Chip carbon
R525,R526	435034714R1	RN72K1J-471JE,Chip carbon <D/A/PT/WT/K/R/Q>
	435036814R1	RN72K1J-681JE,Chip carbon <P>
R527,R528,R529	435034714R1	RN72K1J-471JE,Chip carbon
R530,R531,R532	435034714R1	RN72K1J-471JE,Chip carbon
R533,R534	435034724R1	RN72K1J-472JE,Chip carbon <D/APTP/WT/K/R/Q>
	435031034R1	RN72K1J-103JE,Chip carbon <P>
R535,R536,R537	435034724R1	RN72K1J-472JE,Chip carbon
R538,R539,R540	435034724R1	RN72K1J-472JE,Chip carbon
R541,R542	435034724R1	RN72K1J-472JE,Chip carbon <D/APTP/WT/K/R/Q>
	435031034R1	RN72K1J-103JE,Chip carbon <P>
R543,R544,R545	435034724R1	RN72K1J-472JE,Chip carbon
R546,R547,R548	435034724R1	RN72K1J-472JE,Chip carbon
R549,R550,R551	435031814R1	RN72K1J-181JE,Chip carbon
R552	435034724R1	RN72K1J-472JE,Chip carbon
R553,R554,R555	435031814R1	RN72K1J-181JE,Chip carbon
R556,R557	435031814R1	RN72K1J-181JE,Chip carbon
R558,R559	435031814R1	RN72K1J-181JE,Chip carbon
R560	435034724R1	RN72K1J-472JE,Chip carbon
R561,R562,R563	435031814R1	RN72K1J-181JE,Chip carbon
R564	435031814R1	RN72K1J-181JE,Chip carbon <D>
R565,R566	435031034R1	RN72K1J-103JE,Chip carbon <P>
R573,R574	435031034R1	RN72K1J-103JE,Chip carbon <P>
R581,R582	435031524R1	RN72K1J-152JE,Chip carbon <P>
R589,R590	435032234R1	RN72K1J-223JE,Chip carbon <P>
R597,R598	435032234R1	RN72K1J-223JE,Chip carbon <P>
R605,R606	435032234R1	RN72K1J-223JE,Chip carbon <P>
R613,R614	435032234R1	RN72K1J-223JE,Chip carbon <P>
R621,R622	435031524R1	RN72K1J-152JE,Chip carbon <P>
R629,R630	435031524R1	RN72K1J-152JE,Chip carbon <P>
R637,R638	435030004R1	RN72K1J-000JE,Chip carbon <D/A/PT/WT/K/R/Q>
R639,R640,R641	435030004R1	RN72K1J-000JE,Chip carbon
R642,R643,R644	435030004R1	RN72K1J-000JE,Chip carbon
R682,R683,R684	435032214R1	RN72K1J-221JE,Chip carbon
R685,R686	435032214R1	RN72K1J-221JE,Chip carbon
R688,R689,R690	435032214R1	RN72K1J-221JE,Chip carbon
R691,R692,R693	435032214R1	RN72K1J-221JE,Chip carbon
R859	435031034R1	RN72K1J-103JE,Chip carbon
R861,R862	435035604R1	RN72K1J-560JE,Chip carbon
R863,R864	435035604R1	RN72K1J-560JE,Chip carbon
R865,R866	435033924R1	RN72K1J-392JE,Chip carbon

CIRCUIT NO.	PART NO.	DESCRIPTION
	Resistors	
R867	435033314R1	RN72K1J-331JE,Chip carbon
R868	435032724R1	RN72K1J-272JE,Chip carbon
R869,R870,R871	435035604R1	RN72K1J-560JE,Chip carbon
R872,R873,R874	435035604R1	RN72K1J-560JE,Chip carbon
R875,R876,R877	435035604R1	RN72K1J-560JE,Chip carbon
R878,R879	435035604R1	RN72K1J-560JE,Chip carbon
R880,R881	435031024R1	RN72K1J-102JE,Chip carbon
R882	435032224R1	RN72K1J-222JE,Chip carbon
R883,R884	435031024R1	RN72K1J-102JE,Chip carbon
R885,R886	435035604R1	RN72K1J-560JE,Chip carbon
R887	332121045R1	CK725B1C-104K1,Chip ceramic
R888,R889	435033314R1	RN72K1J-331JE,Chip carbon
R890,R891	435033314R1	RN72K1J-331JE,Chip carbon
R892	435033314R1	RN72K1J-331JE,Chip carbon <D>
R894	435033314R1	RN72K1J-331JE,Chip carbon
R896,R898	435030004R1	RN72K1J-000JE,Chip carbon
R899	435031054R1	RN72K1J-105JE,Chip carbon
R900	435030004R1	RN72K1J-000JE,Chip carbon <O>
R901	441721204F	RS2WBJ-12,Metal oxide
R902	441725604F	RS2WBJ-56,Metal oxide
R904	435033304R1	RN72K1J-330JE,Chip carbon
R906	441721014F	RS2WBJ-100,Metal oxide
R907,R908	435034734R1	RN72K1J-473JE,Chip carbon <O>
R909	435031024R1	RN72K1J-102JE,Chip carbon <O>
R910	435031834R1	RN72K1J-183JE,Chip carbon <O>
R911,R912	435030004R1	RN72K1J-000JE,Chip carbon <D>
R913	435033304R1	RN72K1J-330JE,Chip carbon
	Terminals	
P302	25045303	NPJ-4PDBL162
P303,P304	25045300	NPJ-6PDBL159
P305	25045697	NPJ-6PWRLGGP493
P422	25045333	NPJ-2PDBL185
P424	25045696	LGY2502-0200C
	Sockets	
JL9502B	25050271	NSCT-7P99
P2501A	2009990920UL	NSAS-14P1449
P308	2009990918UL	NSAS-24P1447
P6931B	25052577R2	NSCT-11P2474
	Plugs	
JL7503B	25055624	NPLG-3P586
P351A	25055709	NPLG-13P665
P352A	25055712	NPLG-20P668
P353A	25055807	NPLG-18P763
P354A	25055710	NPLG-14P666
	Isolated sheets	
Q904B,Q909B	223026	ISO SHEET
	Transistor accessary	
Q904C,Q909C	223034	MT-25
	Heat sink	
Q901B	27160500	RAD-165
	Screws	
Q901A,Q904A	82143010	3P+10FN(BC),Pan head
Q909A,Q910A	82143010	3P+10FN(BC),Pan head

Main connector PC board (NADG-8366-1L/1M/1N/1P)

CIRCUIT NO.	PART NO.	DESCRIPTION
	ICs	
Q701	W0025R301150M105	M30627FHPGP U5C
Q710	22242120R2	BU1924FS <P>
	Transistors	
Q702,Q705,Q707	2216210R2 or	KRC104S or
Q709,Q711	2214490R2	RN1404

CIRCUIT NO.	PART NO.	DESCRIPTION
	Transistors	
Q703,Q704,Q706	2216220R2 or	KRA102S or
Q708	2214530R2	RN2402
	Diodes	
D701,D702,D703	223234R2 or	1SS352 or
D705,D706,D708	223269R2	1SS355
D704,D707	224660514R2 or	HZU5.1B or
D709	224550510R2	UDZS5.1B
D711	224551300R2 or	UDZS13B or
	224661304R2	HZU13B
	Oscillators	
X701	3010397R2	CSTCR6M0055-R0
X702	3010203	AF6146CG <P>
	Choke coils	
L701	233533K470R2 or	NCH-1587-470K or
	231237K470R2	NCH-1479
L702	233533K220R2	NCH-1587-220K
	231237K220R2	NCH-1477 <P>
	Capacitors	
C701,C702,C703	394680107 or	CE04W50V-1M(VR) or
	394780107	CE04W50V1.0M(SC),Elect.
C704	3000126 or	FM0H224Z or
	3000079	DX-5R5L224,Super
C705	332121045R1	CK725B1C-104K1,Chip ceramic
C706	332161040R1	CK725F1E-104Z1,Chip ceramic
C707	394680107 or	CE04W50V-1M(VR) or
	394780107	CE04W50V1.0M(SC),Elect.
C708,C709,C710	332161040R1	CK725F1E-104Z1,Chip ceramic
C711,C712	332161040R1	CK725F1E-104Z1,Chip ceramic
C714,C715,C716	342111024R1	CC725CH1E-102J1,Chip ceramic
C717,C718,C719	342111024R1	CC725CH1E-102J1,Chip ceramic
C720,C721,C722	342111024R1	CC725CH1E-102J1,Chip ceramic
C723,C724	342111024R1	CC725CH1E-102J1,Chip ceramic
C725,C727,C729	394641007 or	CE04W16V-10M(VR) or
	394741007	CE04W16V10M(SC),Elect.
C726,C728	337394745R1	CK732B1C-474K,Chip ceramic
C730,C731	342103304R1	CC725CH1H-330J1,Chip ceramic <P>
	342103304R1	CC725CH1H-330J1,Chip ceramic
C732	355744709	CE04W16V-47M,Elect. <P>
C733,C735	332161040R1	CK725F1E-104Z1,Chip ceramic <P>
C734	355780229	CE04W50V-2.2M,Elect. <P>
C736	342105614R1	CC725CH1H-561J1,Chip ceramic <P>
C737,C738	394680337 or	CE04W50V-3.3M(VR) or
	394780337	CE04W50V3.3M(SC),Elect.
C739,C740	342101014R1	CC725CH1H-101J1,Chip ceramic
C741	394641007 or	CE04W16V-10M(VR) or
	394741007	CE04W16V10M(SC),Elect.
	Resistors	
R701,R702	435032214R1	RN72K1J-221JE,Chip carbon
R703,R704	435032214R1	RN72K1J-221JE,Chip carbon
R705	435031034R1	RN72K1J-103JE,Chip carbon
R706,R707,R708	435032214R1	RN72K1J-221JE,Chip carbon
R709,R710,R711	435031034R1	RN72K1J-103JE,Chip carbon
R712,R713	435031034R1	RN72K1J-103JE,Chip carbon
R714,R715,R716	435032214R1	RN72K1J-221JE,Chip carbon
R717,R718,R719	435032214R1	RN72K1J-221JE,Chip carbon
R720,R721	435032214R1	RN72K1J-221JE,Chip carbon
R722,R723	435031034R1	RN72K1J-103JE,Chip carbon
R724	435032214R1	RN72K1J-221JE,Chip carbon
R725,R726	435031004R1	RN72K1J-100JE,Chip carbon
R727,R728,R729	435032214R1	RN72K1J-221JE,Chip carbon
R730,R731,R732	435032214R1	RN72K1J-221JE,Chip carbon
R733,R734,R735	435032214R1	RN72K1J-221JE,Chip carbon

CIRCUIT NO.	PART NO.	DESCRIPTION
	Resistors	
R736,R737,R738	435032214R1	RN72K1J-221JE,Chip carbon
R739,R740,R741	435032214R1	RN72K1J-221JE,Chip carbon
R742,R743,R744	435032214R1	RN72K1J-221JE,Chip carbon
R745,R746	435031034R1	RN72K1J-103JE,Chip carbon
R747,R748	435032214R1	RN72K1J-221JE,Chip carbon
R749,R750	435032214R1	RN72K1J-221JE,Chip carbon
R751,R752,R753	435032214R1	RN72K1J-221JE,Chip carbon
R754,R755,R756	435032214R1	RN72K1J-221JE,Chip carbon
R757,R758,R759	435032214R1	RN72K1J-221JE,Chip carbon
R760,R761,R762	435032214R1	RN72K1J-221JE,Chip carbon
R763	435032214R1	RN72K1J-221JE,Chip carbon
R764	435030004R1	RN72K1J-000JE,Chip carbon
R765,R766,R767	435032214R1	RN72K1J-221JE,Chip carbon
R768,R769	435032214R1	RN72K1J-221JE,Chip carbon
R770,R771	435030004R1	RN72K1J-000JE,Chip carbon
R772,R773,R774	435032214R1	RN72K1J-221JE,Chip carbon
R775,R776,R777	435032214R1	RN72K1J-221JE,Chip carbon
R778,R779,R780	435032214R1	RN72K1J-221JE,Chip carbon
R781,R782,R783	435032214R1	RN72K1J-221JE,Chip carbon
R784	435034724R1	RN72K1J-472JE,Chip carbon
R785,R786,R787	435032214R1	RN72K1J-221JE,Chip carbon
R788,R789,R790	435032214R1	RN72K1J-221JE,Chip carbon
R791,R792,R793	435032214R1	RN72K1J-221JE,Chip carbon
R794,R795,R796	435032214R1	RN72K1J-221JE,Chip carbon
R797,R798,R799	435034724R1	RN72K1J-472JE,Chip carbon
R800,R801,R802	435034724R1	RN72K1J-472JE,Chip carbon
R803,R804	435034724R1	RN72K1J-472JE,Chip carbon
R805,R806,R809	435031034R1	RN72K1J-103JE,Chip carbon
R810	435034734R1	RN72K1J-473JE,Chip carbon
R811	435031054R1	RN72K1J-105JE,Chip carbon
R812,R813	435031024R1	RN72K1J-102JE,Chip carbon
R814	435031034R1	RN72K1J-103JE,Chip carbon
R815	435034734R1	RN72K1J-473JE,Chip carbon
R816,R817,R818	435031034R1	RN72K1J-103JE,Chip carbon
R819,R820,R821	435031034R1	RN72K1J-103JE,Chip carbon
R822,R823,R824	435031034R1	RN72K1J-103JE,Chip carbon
R825,R826	435031034R1	RN72K1J-103JE,Chip carbon
R830	435031034R1	RN72K1J-103JE,Chip carbon <D/A/PT/WT/K/R/Q>
R831	435032244R1	RN72K1J-224JE,Chip carbon
R832	435031014R1	RN72K1J-101JE,Chip carbon
R834,R835,R836	435031034R1	RN72K1J-103JE,Chip carbon
R837,R838,R839	435032724R1	RN72K1J-272JE,Chip carbon
R840	435032724R1	RN72K1J-272JE,Chip carbon
R841,R843,R845	435032224R1	RN72K1J-222JE,Chip carbon
R842,R844,R846	435031024R1	RN72K1J-102JE,Chip carbon
R847,R848,R849	435032244R1	RN72K1J-224JE,Chip carbon
R850	435031024R1	RN72K1J-102JE,Chip carbon <P>
R851,R852	435034734R1	RN72K1J-473JE,Chip carbon
R853,R854	435034734R1	RN72K1J-473JE,Chip carbon
R855	435033314R1	RN72K1J-331JE,Chip carbon
R856,R857	435034734R1	RN72K1J-473JE,Chip carbon
R858	435031044R1	RN72K1J-104JE,Chip carbon
R860	435031034R1	RN72K1J-103JE,Chip carbon
R981	435035634R1	RN72K1J-563JE,Chip carbon <P>
	435033334R1	RN72K1J-333JE,Chip carbon <A>
	435031034R1	RN72K1J-103JE,Chip carbon <PT/WT/K/R/Q>
R982	435030004R1	RN72K1J-000JE,Chip carbon <D>
	435033334R1	RN72K1J-333JE,Chip carbon <P>
	435031034R1	RN72K1J-103JE,Chip carbon <A/PT/WT/K/R/Q>
R983	435031034R1	RN72K1J-103JE,Chip carbon <D>
R984	435033334R1	RN72K1J-333JE,Chip carbon <D>

CIRCUIT NO.	PART NO.	DESCRIPTION
	ICs	
R985	435033334R1	RN72K1J-333JE,Chip carbon <D>
	435035634R1	RN72K1J-563JE,Chip carbon <O>
R986,R987	435035634R1	RN72K1J-563JE,Chip carbon <D>
	435033334R1	RN72K1J-333JE,Chip carbon <O>
R988	435033334R1	RN72K1J-333JE,Chip carbon <D>
	435035634R1	RN72K1J-563JE,Chip carbon <P/A>
	435034724R1	RN72K1J-472JE,Chip carbon <PT/WT/K/R/Q>
R990	435030004R1	RN72K1J-000JE,Chip carbon
R991	435031034R1	RN72K1J-103JE,Chip carbon
R992	435031034R1	RN72K1J-103JE,Chip carbon <D>
R992	435033334R1	RN72K1J-333JE,Chip carbon <O>
R993,R994	435031034R1	RN72K1J-103JE,Chip carbon
R995	435035634R1	RN72K1J-563JE,Chip carbon
R996	435033334R1	RN72K1J-333JE,Chip carbon
	Sockets	
P351	25051238	NSCT-13P1028
P352	25051241	NSCT-20P1031
P353	25051529	NSCT-18P1316
P354	25051239	NSCT-14P1029
P7501B	25052589R2	NSCT-23P2486
P761A	25052211 or	NSCT-15P2108 or
	25051822	NSCT-15P1609
	Plugs	
P122A	25055702	NPLG-6P658
P2004A	25055710	NPLG-14P666
P2005A	25055705	NPLG-9P661
P701	25055704	NPLG-8P660

Control terminal PC board (NAETC-8367-1L/1M/1N/1P)

CIRCUIT NO.	PART NO.	DESCRIPTION
	Photo coupler	
Q177	24120080	PC817X
	Transistors	
Q171	2212855 or	2SB1068-U or
	2212853	2SB1068-K
Q174,Q178,Q179	2216190R2 or	KRC102S or
	2214470R2	RN1402
	Capacitors	
C173	394644707 or	CE04W16V-47M(VR) or
	394744707	CE04W16V47M(SC),Elect.
C176	332101025R1	CK725B1H-102K1,Chip ceramic
C178	332112235R1	CK725B1E-223K1,Chip ceramic
C179	394621017 or	CE04W6.3V-100M(VR) or
	394721017	CE04W6.3V100M(SC),Elect.
	Resistors	
R171	4000195	RXE030,Thermistor
R174	435032224R1	RN72K1J-222JE,Chip carbon
R177	435031024R1	RN72K1J-102JE,Chip carbon
R180,R181	435030004R1	RN72K1J-000JE,Chip carbon
R183	435031014R1	RN72K1J-101JE,Chip carbon
R186	435030004R1	RN72K1J-000JE,Chip carbon
R188,R189	435031034R1	RN72K1J-103JE,Chip carbon
R190	435033324R1	RN72K1J-332JE,Chip carbon <A/PT/WT/K/R/Q>
	Terminals	
P118	25045647	HSJ1002-01-1020
	Sockets	
P122	25051231	NSCT-6P1021

Digital input/output terminal PC board (NADG-8368-1L/1M/1N/1P)

CIRCUIT NO.	PART NO.	DESCRIPTION
	ICs	
Q111,Q112	222740046R2	74HCU04F
	Photo couplers	
U111	24120102	TOTX179L
U112,U113	24120101	TORX179L
U114	24120101	TORX179L <D>
	Coils	
L112,L113,L114	233533M022R2 or	NCH-1587-022M or
L115,L116	231237K022R2	NCH-1471
	Capacitors	
C113	332101025R1	CK725B1H-102K1,Chip ceramic
C114,C115	342101014R1	CC725CH1H-101J1,Chip ceramic
C116,C117	332121045R1	CK725B1C-104K1,Chip ceramic
C118,C119,C120	342100802R1	CC725CH1H-080D1,Chip ceramic
C121	394621017 or	CE04W6.3V-100M(VR) or
	394721017	CE04W6.3V100M(SC),Elect.
C122,C123	332161040R1	CK725F1E-104Z1,Chip ceramic
C124,C125	332161040R1	CK725F1E-104Z1,Chip ceramic
C126	332161040R1	CK725F1E-104Z1,Chip ceramic
C128,C130	394621017 or	CE04W6.3V-100M(VR) or
	394721017	CE04W6.3V100M(SC),Elect.
C129	332161040R1	CK725F1E-104Z1,Chip ceramic
	Resistors	
R111,R112	435037504R1	RN72K1J-750JE,Chip carbon
R113,R114	435031004R1	RN72K1J-100JE,Chip carbon
R115,R116	435032244R1	RN72K1J-224JE,Chip carbon
R117,R118.R119	435031034R1	RN72K1J-103JE,Chip carbon
R122	435031044R1	RN72K1J-104JE,Chip carbon
R123,R124	435033314R1	RN72K1J-331JE,Chip carbon
R125	435033314R1	RN72K1J-331JE,Chip carbon <D>
R127	435030004R1	RN72K1J-000JE,Chip carbon <O>
R128	435030004R1	RN72K1J-000JE,Chip carbon
	Terminal	
P112	25045640	NPJ-2PDO445
	Socket	
P120A	2009990917UL	NSAS-24P1446

Primary circuit PC board (NAPS-8382-1L/1M/1N/1P/1Q/1R/1T)

CIRCUIT NO.	PART NO.	DESCRIPTION
	Transistors	
Q921	2215864 or	KTC3199-GR or
	2213284 or	2SC1740S-R or
	2213285 or	2SC1740S-S or
	2212115	2SC2458-GR
	Diodes	
D921,D922	22380260 or	RL1N4003 or
D923,D924	22380035	GP104003E
D925	223163 or	1SS133 or
	223205 or	1SS270A or
	223222	WG713A
	Capacitors	
C901	3800039S or !	ECQU2A103MLC or
	3500196S !	RE275V-103M,IS
C921	335622230	CK45F50V-223Z,Ceramic
C922	394654717	CE04W25V-470M(VR),Elect.
C923	335321025	CK45B50V-102K,Ceramic
	Resistors	
R921	453630824	RNU1WCJ-8.2,Metal
R922	417341034	R16J-10K,Carbon
R923	417341024	R16J-1K,Carbon
R926	417344724	R16J-4.7K,Carbon

CIRCUIT NO.	PART NO.		DESCRIPTION
	Power transformer		
T902	2301775	!	NPT-1504D <D>
T902	2301776	!	NPT-1504P <P/A>
T902	2301777	!	NPT-1504DG <PT/WT/K/R/Q>
	Fuse holders		
F901A,F901B	25052133	!	NSCT-1P2031 <D/WT>
F902A,F902B	25052133	!	NSCT-1P2031 <O>
F903A,F903B	25052133	!	NSCT-1P2031
	Label		
F903C	29361747		T2.5AL250V <O>
F903C	29361747		T2.5AL250V
	AC outlet		
P902	25051126	!	NSCT-4P913 <D>
	25051125	!	NSCT-4P912 <P/WT/Q>
	25052115	!	NSCT-2P2013 <A>
	25053032 or	!	AC-181-GB-11VGY5311 or
	25052664	!	NSCT-2P2560 <R>
	Socket		
P931B	25051230		NSCT-5P1020
	Relay		
RL901	25065670 or	!	NRL-1P10A-DC9-180 or
	25065671	!	NRL-1P10A-DC9-181
	Switch		
S902	25065437	!	NSS-22157P <WT>
	Plugs		
P901A	25055675 or	!	NPLG-2P631 or
	25056402	!	1-1123724-2

Driver circuit PC board (NAAF-8383-1L/1M/1N/1P/1Q/1R/1T)

CIRCUIT NO.	PART NO.		DESCRIPTION
	Transistors		
Q5000,Q5001	2210755 or	*	2SC1775A-E or
Q5002,Q5010	2210756 or	*	2SC1775A-F or
Q5011,Q5012	2211733	*	2SC1845-E
Q5003,Q5004	2215896 or	*	KTC3200-BL or
Q5005,Q5006	2210755 or	*	2SC1775A-E or
Q5013,Q5014	2210756 or	*	2SC1775A-F or
Q5015,Q5016	2211733	*	2SC1845-E
Q5030,Q5031	2202094 or		2SA1360-Y or
Q5032	2202093		2SA1360-O
Q5033,Q5034	2215844 or		KTA1024-Y or
Q5035,Q5036	2215843 or		KTA1024-O or
	2211354 or		2SA949-Y or
	2211353		2SA949-O
Q5040,Q5041	2202104 or		2SC3423-Y or
Q5042	2202103		2SC3423-O
Q5043,Q5044	2215854 or		KTC3206-Y or
Q5045,Q5046	2215853 or		KTC3206-O or
	2211634 or		2SC2229-Y or
	2211633		2SC2229-O
Q5050,Q5051	2215896 or		KTC3200-BL or
Q5052,Q5053	2215895 or		KTC3200-GR or
Q5054,Q5055	2210755 or		2SC1775A-E or
Q5056	2210756 or		2SC1775A-F or
	2211733 or		2SC1845-E or
	2211732		2SC1845-F
	Diodes		
D5000,D5001	224470562		MTZJ5.6B
D5002,D5003	224470562		MTZJ5.6B
D5004,D5005	224470562		MTZJ5.6B
D5006	224470562		MTZJ5.6B

CIRCUIT NO.	PART NO.	DESCRIPTION
	Capacitors	
C5000,C5001	374721015	ECQ-B50V-101K,Plastic
C5002,C5003	374721015	ECQ-B50V-101K,Plastic
C5004,C5005	374721015	ECQ-B50V-101K,Plastic
C5006	374721015	ECQ-B50V-101K,Plastic
C5010,C5011	393384707	CE04W50V-47M(VX),Elect.
C5012,C5013	393381007	CE04W50V-10M(VX),Elect.
C5014,C5015	393381007	CE04W50V-10M(VX),Elect.
C5016	393381007	CE04W50V-10M(VX),Elect.
C5020,C5021	394681007	CE04W50V-10M(VX),Elect.
C5022,C5023	394681007	CE04W50V-10M(VX),Elect.
C5024,C5025	394681007	CE04W50V-10M(VX),Elect.
C5026	394681007	CE04W50V-10M(VX),Elect.
C5040,C5041	393342217	CE04W16V-220M(VX),Elect.
C5042,C5043	393342217	CE04W16V-220M(VX),Elect.
C5044,C5045	393342217	CE04W16V-220M(VX),Elect.
C5046	393342217	CE04W16V-220M(VX),Elect.
C5050,C5051	394684707	CE04W50V-47M(VR),Elect.
C5052,C5053	394684707	CE04W50V-47M(VR),Elect.
C5054,C5055	394684707	CE04W50V-47M(VR),Elect.
C5056	394684707	CE04W50V-47M(VR),Elect.
C5080,C5081	345020401	CC45SL50V-040C,Ceramic
C5082,C5083	345020401	CC45SL50V-040C,Ceramic
C5084,C5085	345020401	CC45SL50V-040C,Ceramic
C5086	345020401	CC45SL50V-040C,Ceramic
C5090,C5091	374721015	ECQ-B50V-101K,Plastic film
C5092,C5093	374721015	ECQ-B50V-101K,Plastic film
C5094,C5095	374721015	ECQ-B50V-101K,Plastic film
C5096	374721015	ECQ-B50V-101K,Plastic film
C5100,C5101	394571007	CE04W63V-10M(VZ),Elect.
C5102	394571007	CE04W63V-10M(VZ),Elect.
C5103,C5104	394671007	CE04W63V-10M(VR),Elect.
C5105,C5106	394671007	CE04W63V-10M(VR),Elect.
C5103	394671007	CE04W63V-10M(VR),Elect.
C5110,C5111	394571007	CE04W63V-10M(VZ),Elect.
C5112	394571007	CE04W63V-10M(VZ),Elect.
C5113,C5114	394671007	CE04W63V-10M(VR),Elect.
C5115,C5116	394671007	CE04W63V-10M(VR),Elect.
	Resistors	
R5000,R5001	417341024	R16J-1K,Carbon
R5002,R5003	417341024	R16J-1K,Carbon
R5004,R5005	417341024	R16J-1K,Carbon
R5006	417341024	R16J-1K,Carbon
R5010,R5011	417345634	R16J-56K,Carbon
R5012,R5013	417345634	R16J-56K,Carbon
R5014,R5015	417345634	R16J-56K,Carbon
R5016	417345634	R16J-56K,Carbon
R5020,R5021	417343314	R16J-330,Carbon
R5022,R5023	417343314	R16J-330,Carbon
R5024,R5025	417343314	R16J-330,Carbon
R5026	417343314	R16J-330,Carbon
R5030,R5031	417345634	R16J-56K,Carbon
R5032,R5033	417345634	R16J-56K,Carbon
R5034,R5035	417345634	R16J-56K,Carbon
R5036	417345634	R16J-56K,Carbon
R5040,R5041	417342224	R16J-2.2K,Carbon
R5042,R5043	417342224	R16J-2.2K,Carbon
R5044,R5045	417342224	R16J-2.2K,Carbon
R5046	417342224	R16J-2.2K,Carbon
R5050,R5051	417344724	R16J-4.7K,Carbon
R5052,R5053	417344724	R16J-4.7K,Carbon
R5054,R5055	417344724	R16J-4.7K,Carbon
R5056	417344724	R16J-4.7K,Carbon

CIRCUIT NO.	PART NO.	DESCRIPTION
	Resistors	
R5060,R5061	417341224	R16J-1.2K,Carbon
R5062,R5063	417341224	R16J-1.2K,Carbon
R5064,R5065	417341224	R16J-1.2K,Carbon
R5066	417341224	R16J-1.2K,Carbon
R5080,R5081	417344714	R16J-470,Carbon
R5082,R5083	417344714	R16J-470,Carbon
R5084,R5085	417344714	R16J-470,Carbon
R5086	417344714	R16J-470,Carbon
R5090,R5091	417341044	R16J-100K,Carbon
R5092,R5093	417341044	R16J-100K,Carbon
R5094,R5095	417341044	R16J-100K,Carbon
R5096	417341044	R16J-100K,Carbon
R5100,R5101	417341044	R16J-100K,Carbon
R5102,R5103	417341044	R16J-100K,Carbon
R5104,R5105	417341044	R16J-100K,Carbon
R5106	417341044	R16J-100K,Carbon
R5110,R5111	417341024	R16J-1K,Carbon
R5112,R5113	417341024	R16J-1K,Carbon
R5114,R5115	417341024	R16J-1K,Carbon
R5116	417341024	R16J-1K,Carbon
R5130,R5131	417342234	R16J-22K,Carbon
R5132,R5133	417341834	R16J-18K,Carbon
R5134,R5135	417341834	R16J-18K,Carbon
R5136	417341834	R16J-18K,Carbon
R5160,R5161	415471214	R25J-120,NF carbon
R5162,R5163	415471214	R25J-120,NF carbon
R5164,R5165	415471214	R25J-120,NF carbon
R5166,R5176	415471214	R25J-120,NF carbon
R5170,R5171	415471214	R25J-120,NF carbon
R5172,R5173	415471214	R25J-120,NF carbon
R5174,R5175	415471214	R25J-120,NF carbon
R5180,R5181	415471004	R25J-10,NF carbon
R5182,R5183	415471004	R25J-10,NF carbon
R5184,R5185	415471004	R25J-10,NF carbon
R5186	415471004	R25J-10,NF carbon
R5190,R5191	415471004	R25J-10,NF carbon
R5192,R5193	415471004	R25J-10,NF carbon
R5194,R5195	415471004	R25J-10,NF carbon
R5196	415471004	R25J-10,NF carbon
R5200,R5201	417342234	R16J-22K,Carbon
R5220,R5221	417342734	R16J-27K,Carbon
R5222,R5223	417342734	R16J-27K,Carbon
R5224,R5225	417342734	R16J-27K,Carbon
R5226	417342734	R16J-27K,Carbon
	Sockets	
JL6005A,JL6006A	25051109	NSCT-5P896
P6000A,P6001A	25052288	NSCT-5P2185
P6002A,P6003A	25052288	NSCT-5P2185
P6004A	25052288	NSCT-5P2185
	Plug	
P308A	25055155	NPLG-11P139
	Retainer	
P6011B	27141859	(BUS-U)

Power switch PC board (NASW-8387-1M/1P/1Q/1R/1T)
All models except 120V and Australian models

CIRCUIT NO.	PART NO.		DESCRIPTION
	Capacitor		
C902	3300030 or	!	DE1307E472M-KH or
	3300063	!	DE1007E472M-KY
	Switch		
S906	25035702	!	NPS-121-L665P

Secondary circuit PC board (NAPS-8389-1L/1M/1N/1P/1Q/1R/1T)

CIRCUIT NO.	PART NO.	DESCRIPTION
	IC	
Q9001	222780565JRC or	NJM78M56FA or
	222780574TOS	TA78057S
	Transistor	
Q9002	2215975 or	KTA1266-GR or
	2211455	2SA1015-GR
	Diodes	
D9001,D9002	22380260 or	RL1N4003 or
D9003,D9004	22380035	GP104003E
D9005	22380271 or	D3SBA20 or
	22380285 or	RS403M or
	22380022	RBV402
D9009,D9010	22380260 or	RL1N4003 or
D9011,D9013	22380035	GP104003E
D9012	224472704	MTZJ27D
	Capacitors	
C9001,C9002	375523344	MMT50V-334J,Plastic
C9003	394661027S	CE04W35V-1000M(VR),Elect.
C9004	394664717	CE04W35V-470M(VR),Elect.
C9005	375523344	MMT50V-334J,Plastic
C9009	394662217	CE04W35V-220M(VR),Elect.
C9010	394644727S	CE04W16V-4700M(VR),Elect.
C9011	394651027S	CE04W25V-1000M(VR),Elect.
C9012	335622230	CK45F50V-223Z,Ceramic
C9013	394641007	CE04W16V-10M(VR),Elect.
C9014	394674717S	CE04W63V-470M(VR),Elect.
C9015,C9016	335622230	CK45F50V-223Z,Ceramic
C9017	374721024	ECQ-B50V-102J,Plastic
	Resistors	
R9002	443522204	RS1/2WBJ-22,Metal oxide
R9003,R9004	417348224	R16J-8.2K,Carbon
R9005	417343334	R16J-33K,Carbon
R9006	453530474	RNU1/2WCJ-4.7,Metal
	Sockets	
JL9501B	25051111	NSCT-7P898
JL9502A	25051111	NSCT-7P898
P6931A	25052532 or	NSCT-11P2429 or
	25052348	NSCT-11P2245
P6953B	25051528	NSCT-17P1315
P7502B	25052244	NSCT-11P2141
	Screw	
D9002B	838430107	3TTB+10S(BC)
	Radiator	
D9005A	27160211	(RAD-68)

Fuse terminal PC board (NAETC-8390-1L/1M/1N/1P/1Q/1R/1T)

CIRCUIT NO.	PART NO.	DESCRIPTION
	Capacitor	
C9591	374721044	ECQ-V50V-104J,Plastic
	Resistors	
R9591,R6592	453530104	RNU1/2WCJ-1,Metal
R9594	453530224	RNU1/2WCJ-2.2,Metal
	Fuse holders	
F9501A,F9501B	25052133 !	NSCT-1P2031
	Label	
F9501C	29361747	T2.5AL250V <O>
	Socket	
JL9501A	25051111	NSCT-7P898

Power amplifier PC board (NAAF-8391-1L/1M/1N/1P/1Q/1R/1T)

CIRCUIT NO.	PART NO.	DESCRIPTION
	Transistors	
Q6015,Q6016	2213284 or	2SC1740S-R or
Q6025,Q6026	2213285	2SC1740S-S
Q6035,Q6036	2203010 or	2SC5171 or
	2203434	KTD2061-Y
Q6045,Q6046	2203000 or	2SA1930 or
	2203424	KTB1369-Y
Q6075,Q6076	2215896 or	KTC3200-BL or
	2215895 or	KTC3200-GR or
	2210755 or	2SC1775A-E or
	2210756 or	2SC1775A-F or
	2211733 or	2SC1845-E or
	2211732	2SC1845-F
	Diodes	
D6015,D6016	223163 or	1SS133 or
	223205 or	1SS270A or
	223222	WG713A
	Capacitors	
C6045,C6046	394584707	CE04W50V-47M(VZ),Elect.
C6055,C6056	374721034	ECQ-B50V-103J,Plastic
	Resistors	
R6005,R6006	417345624	R16J-5.6K,Carbon
R6015,R6016	417343924	R16J-3.9K,Carbon
R6035,R6036	417341024	R16J-1K,Carbon
R6045,R6046	5210258	N06HR1KBC,Trimming
R6055,R6056	417343924	R16J-3.9K,Carbon
R6065,R6066	415470224	R25J-2.2,NF carbon
R6075,R6076	415472214	R25J-220,NF carbon
R6085,R6086	415470224	R25J-2.2,NF carbon
R6095,R6096	415470224	R25J-2.2,NF carbon
R6105,R6106	4000201 or	RF-5EGKR22 or
	4000132 or	RGC55 0.22 or
	4500245	BPR55FK0.22,Metal plate
R6145,R6146	417342234	R16J-22K,Carbon
R6155,R6156	417341234	R16J-12K,Carbon
R6165,R6166	417343334	R16J-33K,Carbon
R6205,R6206	417341014	R16J-100,Carbon
R6245,R6246	417342244	R16J-220K,Carbon
	Sockets	
JL6005B,JL6006B	25050269	NSCT-5P97
JL6200B	25050270	NSCT-6P98
	Plugs	
P6085,P6086	25055038	NPLG-2P29

Power amplifier PC board (NAAF-8397-1L/1M/1T)

CIRCUIT NO.	PART NO.	DESCRIPTION
	Transistors	
Q6010,Q6011	2213284 or	2SC1740S-R or
Q6012,Q6013	2213285	2SC1740S-S
Q6014	2213284 or	2SC1740S-R or
Q6020,Q6021	2213285	2SC1740S-S
Q6022,Q6023	2213284 or	2SC1740S-R or
Q6024	2213285	2SC1740S-S
Q6030,Q6031	2203010	2SC5171
Q6032	2203010	2SC5171
Q6033,Q6034	2203010 or	2SC5171 or
	2203434	KTD2061-Y
Q6040,Q6041	2203000	2SA1930
Q6042	2203000	2SA1930
Q6043,Q6044	2203000 or	2SA1930 or
	2203424	KTB1369-Y

CIRCUIT NO.	PART NO.	DESCRIPTION
	Transistors	
Q6070,Q6071	2215896 or	KTC3200-BL or
Q6072,Q6073	2210755 or	2SC1775A-E or
Q6074	2210756 or	2SC1775A-F or
	2211733 or	2SC1845-E or
	2211732 or	2SC1845-F or
	2215895	KTC3200-GR
Q6303,Q6304	2215995 or	KTA1267-GR or
	2213354 or	2SA933S-R or
	2213355	2SA933S-S
Q6601,Q6602	2215864 or	KTC3199-GR or
Q6603,Q6604	2212115 or	2SC2458-GR or
Q6901	2213284 or	2SC1740S-R or
	2213285	2SC1740S-S
Q6701,Q6702	2215896 or	KTC3200-BL or
	2210755 or	2SC1775A-E or
	2210756 or	2SC1775A-F or
	2211732 or	2SC1845-F or
	2211733 or	2SC1845-E or
	2215895	KTC3200-GR
Q6703	2215886 or	KTA1268-BL or
	2211792 or	2SA992-F or
	2211793 or	2SA992-E or
	2215885	KTA1268-GR
	Diodes	
D6000,D6001	223163 or	1SS133 or
D6002,D6003	223205 or	1SS270A or
D6004	223222	WG713A
D6005,D6006	223163 or	1SS133 or
	223205 or	1SS270A or
	223222	WG713A
D6010,D6011	223163 or	1SS133 or
D6012,D6013	223205 or	1SS270A or
D6014	223222	WG713A
D6306,D6307	223163 or	1SS133 or
D6701,D6702	223205 or	1SS270A or
D6906	223222	WG713A
D6703,D6704	224470512	MTZJ5.1B
D6705,D6706	22380260 or	RL1N4003 or
D6901,D6902	22380035	GP104003E
D6707	224470512	MTZJ5.1B
D6904,D6905	22380337	D10XB60H
	Capacitors	
C6040,C6041	394584707	CE04W50V-47M(VZ),Elect.
C6042,C6043	394584707	CE04W50V-47M(VZ),Elect.
C6044	394584707	CE04W50V-47M(VZ),Elect.
C6050,C6051	374721034	ECQ-B50V-103J,Plastic film
C6052,C6053	374721034	ECQ-B50V-103J,Plastic film
C6054	374721034	ECQ-B50V-103J,Plastic film
C6230,C6231	374724734	ECQ-V50V-473J,Plastic film
C6232,C6233	374724734	ECQ-V50V-473J,Plastic film
C6234	374724734	ECQ-V50V-473J,Plastic film
C6235,C6236	374724734	ECQ-V50V-473J,Plastic film
C6701,C6706	394621017	CE04W6.3V-100M(VR),Elect.
C6703,C6707	335622230	CK45F50V-223Z,Ceramic
C6704	394680107	CE04W50V-1M(VR),Elect.
C6708	374722224	ECQ-B50V-222J,Plastic film
C6901,C6902	3504313	CE69W63V-12000M,Elect.
C6903	374721044	ECQ-V50V-104J,Plastic film
C6904,C6905	374733344	ECQ-V100-334J,Plastic film
C6906,C6907	374721044	ECQ-V50V-104J,Plastic film

CIRCUIT NO.	PART NO.	DESCRIPTION
	Resistors	
R6000,R6001	417345624	R16J-5.6K,Carbon
R6002,R6003	417345624	R16J-5.6K,Carbon
R6004	417345624	R16J-5.6K,Carbon
R6010,R6011	417343924	R16J-3.9K,Carbon
R6012,R6013	417343924	R16J-3.9K,Carbon
R6014	417343924	R16J-3.9K,Carbon
R6030,R6031	417341024	R16J-1K,Carbon
R6032,R6033	417341024	R16J-1K,Carbon
R6034	417341024	R16J-1K,Carbon
R6040,R6041	5210258	N06HR1KBC,Trimming
R6042,R6043	5210258	N06HR1KBC,Trimming
R6044	5210258	N06HR1KBC,Trimming
R6050,R6051	417343924	R16J-3.9K,Carbon
R6052,R6053	417343924	R16J-3.9K,Carbon
R6054	417343924	R16J-3.9K,Carbon
R6060,R6061	415470224	R25J-2.2,NF carbon
R6062,R6063	415470224	R25J-2.2,NF carbon
R6064	415470224	R25J-2.2,NF carbon
R6070,R6071	415471214	R25J-120,NF carbon
R6072,R6073	415471214	R25J-120,NF carbon
R6074	415471214	R25J-120,NF carbon
R6080,R6081	415470224	R25J-2.2,NF carbon
R6082,R6083	415470224	R25J-2.2,NF carbon
R6084,R6090	415470224	R25J-2.2,NF carbon
R6091,R6092	415470224	R25J-2.2,NF carbon
R6093,R6094	415470224	R25J-2.2,NF carbon
R6100,R6101	4000201 or	RF-5EGKR22 or
R6102,R6103	4500245 or	BPR55FK0.22 or
R6104	4000132	RGC55 0.22,Metal plate
R6140,R6141	417342234	R16J-22K,Carbon
R6142,R6143	417342234	R16J-22K,Carbon
R6144	417342234	R16J-22K,Carbon
R6150,R6151	417341234	R16J-12K,Carbon
R6152,R6153	417341234	R16J-12K,Carbon
R6154	417341234	R16J-12K,Carbon
R6160,R6161	417343334	R16J-33K,Carbon
R6162,R6163	417343334	R16J-33K,Carbon
R6164	417343334	R16J-33K,Carbon
R6170,R6171	417344734	R16J-47K,Carbon
R6172,R6173	417344734	R16J-47K,Carbon
R6174	417344734	R16J-47K,Carbon
R6175,R6176	417344734	R16J-47K,Carbon
R6180,R6181	417344734	R16J-47K,Carbon
R6182,R6183	417344734	R16J-47K,Carbon
R6184	417344734	R16J-47K,Carbon
R6185,R6186	417344734	R16J-47K,Carbon
R6200,R6201	417341014	R16J-100,Carbon
R6202,R6203	417341014	R16J-100,Carbon
R6204	417341014	R16J-100,Carbon
R6230,R6231	453630824	RNU1WCJ-8.2,Metal
R6232,R6233	453630824	RNU1WCJ-8.2,Metal
R6234	453630824	RNU1WCJ-8.2,Metal
R6235,R6236	453630824	RNU1WCJ-8.2,Metal
R6240,R6241	417342244	R16J-220K,Carbon
R6242,R6243	417342244	R16J-220K,Carbon
R6244	417342244	R16J-220K,Carbon
R6306	417341034	R16J-10K,Carbon
R6307,R6309	417344714	R16J-470,Carbon
R6308,R6310	417344724	R16J-4.7K,Carbon
R6605	443521004	RS1/2WBJ-10,Metal oxide
R6631,R6632	417341024	R16J-1K,Carbon
R6633,R6634	417341024	R16J-1K,Carbon

CIRCUIT NO.	PART NO.	DESCRIPTION
	Resistors	
R6701,R6707	417342234	R16J-22K,Carbon
R6702	417341034	R16J-10K,Carbon
R6704	417344734	R16J-47K,Carbon
R6706	417342244	R16J-220K,Carbon
R6708	417343334	R16J-33K,Carbon
R6709	417345624	R16J-5.6K,Carbon
R6710	417341234	R16J-12K,Carbon
R6750,R6751	443523914	RS1/2WBJ-390,Metal oxide
R6901	443521004	RS1/2WBJ-10,Metal oxide
R6902	417341024	R16J-1K,Carbon
	Relays	
RL6901,RL6902	25065584 or 25065516	NRL-1P10A-DC12-140 or NRL-1P10A-DC12-097
	Fuse holders	
F6901A,F6901B	250113	SN5051
F6902A,F6902B	250113	SN5051
	Label	
	Sockets	
JL6200A	25051110	NSCT-6P897
JL6402A	25051088	NSCT-4P875
JL6802A	25051108	NSCT-4P895
JL6803A,JL6952A	25051109	NSCT-5P896
P6800A,P6801A	25051255	NSCT-3P1045
P995	2009990875UL	NSAS-6P1334
	Plugs	
P6000B,P6001B	25056010	NPLG-5P0960
P6002B,P6003B	25056010	NPLG-5P0960
P6004B	25056010	NPLG-5P0960
P6080,P6081	25055038	NPLG-2P29
P6082,P6083	25055038	NPLG-2P29
P6084	25055038	NPLG-2P29
P6301	25055042	NPLG-3P32
P6804A	25055701	NPLG-5P657
P6953A	25055806	NPLG-17P762
P931A	25055701	NPLG-5P657
	Retainer	
P6011A	27141860	(BUS-D)
	Heat sink	
D6904A	27160499	RAD-164
	Screws	
D6904B,D6905B	82143010	3P+10FN(BC)

Secondary circuit PC board (NAETC-8398-1L/1M/1T)

CIRCUIT NO.	PART NO.	DESCRIPTION
JL6952B	25051109	NSCT-5P896,Socket

Speaker terminal PC board (NAETC-8399-1L/1M/1T)

CIRCUIT NO.	PART NO.	DESCRIPTION
	Diodes	
D6803,D6805 D6807	223163 or 223205 or 223222	1SS133 or 1SS270A or WG713A
	Coils	
L6803,L6804	231176S	S-1.3C <O>
L6805,L6806	231176S	S-1.3C <O>
	Capacitors	
C6803,C6805	374721034	ECQ-B50V-103J,Plastic film
C6807	374721034	ECQ-B50V-103J,Plastic film
C6843,C6844	374721034	ECQ-B50V-103J,Plastic film <O>
C6845,C6846	374721034	ECQ-B50V-103J,Plastic film <O>
C6847,C6848	374721034	ECQ-B50V-103J,Plastic film <O>
C6853,C6854	374721024	ECQ-B50V-102J,Plastic film <O>

CIRCUIT NO.	PART NO.	DESCRIPTION
	Capacitors	
C6855,C6856	374721024	ECQ-B50V-102J,Plastic film <O>
C6857,C6858	374721024	ECQ-B50V-102J,Plastic film <O>
	Resistors	
R6803,R6804	417342204	R16J-22,Carbon <O>
R6805,R6806	417342204	R16J-22,Carbon <O>
R6813,R6814	417342204	R16J-22,Carbon <O>
R6815,R6816	417342204	R16J-22,Carbon <O>
	Relays	
RL6803,RL6805	25065618	NRL-2P5A-DC24-158
RL6807	25065618	NRL-2P5A-DC24-158
	Terminals	
P6802	25060391	NTM-8PDMN322 <D>
P6802	25060392	NTM-8PDMN323 <O>
P6803	25060389	NTM-4PDMN320 <D>
P6803	25060385	NTM-4PDMN316 <O>
P6072A,P6073B	25060301	NTM-1P232(M1700)
	Sockets	
JL6802B	25050281	NSCT-4P109
JL6803B	25050282	NSCT-5P110
JL6805B	25050281	NSCT-4P109
	Holders	
P6850,P6851	27190926	KGPS-18RF

Speaker terminal F/C PC board (NAETC-8400-1L/1M/1T)

CIRCUIT NO.	PART NO.	DESCRIPTION
	Diodes	
D6600,D6602	223163 or	1SS133 or
	223205 or	1SS270A or
	223222	WG713A
	Coils	
L6600,L6601	231176S	S-1.3C <O>
L6602	231176S	S-1.3C <O>
	Capacitors	
C6600,C6602	374721034	ECQ-B50V-103J,Plastic film
C6640,C6641	374721034	ECQ-B50V-103J,Plastic film <O>
C6642	374721034	ECQ-B50V-103J,Plastic film <O>
C6650,C6651	374721024	ECQ-B50V-102J,Plastic film <O>
C6652	374721024	ECQ-B50V-102J,Plastic film <O>
	Resistors	
R6600,R6601	417342204	R16J-22,Carbon <O>
R6602,R6610	417342204	R16J-22,Carbon <O>
R6611,R6612	417342204	R16J-22,Carbon <O>
	Relays	
RL6600,RL6602	25065618	NRL-2P5A-DC24-158
	Terminals	
P6600	25060389	NTM-4PDMN320 <D>
P6600	25060385	NTM-4PDMN316 <O>
P6602	25060387	NTM-2PDMN318 <D>
P6602	25060388	NTM-2PDMN319 <O>
	Sockets	
P6804B	25051230	NSCT-5P1020
JL6805A	25051108	NSCT-4P895
	Plugs	
P6800B,P6801B	25055722	NPLG-3P678

Thermal detector PC board (NAETC-8402-1L/1M/1T)

CIRCUIT NO.	PART NO.	DESCRIPTION
	Resistors	
R6380	4000217	PTFL04BF471Q2N34B0 (80）,Thermistor
R6381	4000220	PTFL04BC471Q2N34B0 (110）,Thermistor
	Socket	
JL6402C	25051088	NSCT-4P875

Video terminal PC board ass'y (NAVD-8464-1M/2L)
European and Australian models

CIRCUIT NO.	PART NO.	DESCRIPTION
	ICs	
Q2001,Q2002,Q2003	22241946R2	NJM2595M
Q2004	22241779	LC74763-9836
Q2011	22241221R2	TC9164AF
Q2101	22242154R3	ADV7183A
Q2102	22278033DR2NE or	MPC2933T or
	22278033DR2JR	NJM2391DL1-33
Q2103	22278018ER2NE	MPC2918T
Q2104	22242155R3	ADV7172
Q2106,Q2107	22241465R2	LA7106MFP
	Transistors	
Q2005,Q2201,Q2202	2216175R2 or	KTC3875-GR or
	2213145R2	2SC2712-GR
Q2006,Q2007	2215510R2	RN1443
Q2008,Q2009,Q2022	2216185R2 or	KTA1504-GR or
	2214375R2	2SA1162-GR
Q2010	2214530R2 or	RN2402 or
	2216220R2	KRA102S
Q2012,Q2013,Q2017	2215510R2	RN1443
Q2018,Q2020	2215510R2	RN1443
Q2023,Q2024,Q2025	2215510R2	RN1443
Q2105	2216330R2 or	KRC101S or
	2214460R2	RN1401
Q2108,Q2109	2216520R2	2SK3019
	Diodes	
D2001,D2002,D2003	223234R2 or	1SS352 or
D2201,D2202	223269R2	1SS355
	Coils	
L2001	231292J056R2	NCH-1572
L2002,L2007,L2101	231237K022R2 or	NCH-1471 or
L2104,L2105	233533K022R2	NCH-1587-022K
L2102,L2103	231237K220R2 or	NCH-1477 or
	233533K220R2	NCH-1587-220K
	Oscillators	
X2001	3010363	HC-49/U0314.318M
X2002	3010364	HC-49/U0317.734M
X2101	3010353R2	FCX-03-27MHz
	Capacitors	
C2001,C2002,C2003	332101025R1	CK725B1H-102K1,Chip ceramic
C2004,C2005	394641007 or	CE04W16V-10M(VR) or
C2007,C2008	394741007	CE04W16V10M(SC),Elect.
C2006,C2009	332161040R1	CK725F1E-104Z1,Chip ceramic
C2010,C2011,C2012	342104704R1	CC725CH1H-470J1,Chip ceramic
C2013,C2014	394641007 or	CE04W16V-10M(VR) or
C2019,C2020	394741007	CE04W16V10M(SC),Elect.
C2015,C2021,C2022	332161040R1	CK725F1E-104Z1,Chip ceramic
C2016,C2017,C2018	342104704R1	CC725CH1H-470J1,Chip ceramic
C2023,C2024	394621017 or	CE04W6.3V-100M(VR) or
C2027,C2028	394721017	CE04W6.3V100M(SC),Elect.
C2025,C2026	332161040R1	CK725F1E-104Z1,Chip ceramic
C2029,C2030,C2033	332161040R1	CK725F1E-104Z1,Chip ceramic
C2031,C2032	394621017 or	CE04W6.3V-100M(VR) or
C2031,C2032	394721017	CE04W6.3V100M(SC),Elect.
C2041	342101002R1	CC725CH1H-100D1,Chip ceramic
C2042,C2043	342101804R1	CC725CH1H-180J1,Chip ceramic
C2044	342100802R1	CC725CH1H-080D1,Chip ceramic
C2045,C2046	342104704R1	CC725CH1H-470J1,Chip ceramic
C2047,C2048	342104704R1	CC725CH1H-470J1,Chip ceramic
C2049,C2057	394680107 or	CE04W50V-1M(VR) or
	394780107	CE04W50V1.0M(SC),Elect.
C2050	342104704R1	CC725CH1H-470J1,Chip ceramic

CIRCUIT NO.	PART NO.	DESCRIPTION
	Capacitors	
C2051,C2102	394624717 or	CE04W6.3V-470M(VR) or
	394724717	CE04W6.3V470M(SC),Elect.
C2052	332161040R1	CK725F1E-104Z1,Chip ceramic
C2053,C2065	394621017 or	CE04W6.3V-100M(VR) or
	394721017	CE04W6.3V100M(SC),Elect.
C2054	394683397	CE04W50V-0.33M(VR),Elect.
C2055	332101225R1	CK725B1H-122K1,Chip ceramic
C2056	374726824	ECQ-B50V-682J,Plastic film
C2058	374722234	ECQ-B50V-223J,Plastic film
C2059	342102204R1	CC725CH1H-220J1,Chip ceramic
C2060	342102704R1	CC725CH1H-270J1,Chip ceramic
C2061	394684797 or	CE04W50V-0.47M(VR) or
	394784797	CE04W50V0.47M(SC),Elect.
C2063	375524744	MMT50V-474J,Plastic film
C2066,C2067,C2068	332161040R1	CK725F1E-104Z1,Chip ceramic
C2071,C2072	332161040R1	CK725F1E-104Z1,Chip ceramic
C2073,C2078,C2102	394624717 or	CE04W6.3V-470M(VR) or
C2073,C2078,C2102	394724717	CE04W6.3V470M(SC),Elect.
C2090,C2101	332161040R1	CK725F1E-104Z1,Chip ceramic
C2091,C2092	394641007 or	CE04W16V-10M(VR) or
C2091,C2092	394741007	CE04W16V10M(SC),Elect.
C2103	332161040R1	CK725F1E-104Z1,Chip ceramic
C2104,C2112,C2115	395541007R2 or	F93-16V-10M or
C2117,C2219	396041007R2	TCFGA-1C106M8R,Chip tantal
C2105,C2106,C2107	332161040R1	CK725F1E-104Z1,Chip ceramic
C2108,C2109,C2111	332161040R1	CK725F1E-104Z1,Chip ceramic
C2110	332151030R1	CK725F1H-103Z1,Chip ceramic
C2113,C2214,C2216	332161040R1	CK725F1E-104Z1,Chip ceramic
C2118,C2120	332161040R1	CK725F1E-104Z1,Chip ceramic
C2121,C2122	342111024R1	CC725CH1E-102J1,Chip ceramic
C2123,C2125,C2126	332161040R1	CK725F1E-104Z1,Chip ceramic
C2124,C2131,C2135	332151030R1	CK725F1H-103Z1,Chip ceramic
C2128,C2129	342101204R1	CC725CH1H-120J1,Chip ceramic
C2130,C2134	332161040R1	CK725F1E-104Z1,Chip ceramic
C2132	373048234R2	ECHU16V-823J,Chip ceramic
C2133	373041034R2	ECHU16V-103J,Chip ceramic
C2136	394624717 or	CE04W6.3V-470M(VR) or
	394724717	CE04W6.3V470M(SC),Elect.
C2137,C2141,C2142	332161040R1	CK725F1E-104Z1,Chip ceramic
C2161,C2162,C2163	332161040R1	CK725F1E-104Z1,Chip ceramic
C2164,C2184	395541007R2 or	F93-16V-10M or
	396041007R2	TCFGA-1C106M8R,Chip tantal
C2171,C2172,C2173	337361055R2	CK732B1A-105K,Chip ceramic
C2174,C2175,C2176	337361055R2	CK732B1A-105K,Chip ceramic
C2177,C2180,C2181	394621017 or	CE04W6.3V-100M(VR) or
C2177,C2180,C2181	394721017	CE04W6.3V100M(SC),Elect.
C2178,C2179	332161040R1	CK725F1E-104Z1,Chip ceramic
C2182,C2183	332161040R1	CK725F1E-104Z1,Chip ceramic
C2185,C2186	332161040R1	CK725F1E-104Z1,Chip ceramic
C2188,C2189	332161040R1	CK725F1E-104Z1,Chip ceramic
C2201,C2202	332101025R1	CK725B1H-102K1,Chip ceramic
C6887	342111024R1	CC725CH1E-102J1,Chip ceramic
C6891	332101025R1	CK725B1H-102K1,Chip ceramic
	Resistors	
R2001,R2002,R2003	435031034R1	RN72K1J-103JE,Chip carbon
R2004,R2005,R2006	435037504R1	RN72K1J-750JE,Chip carbon
R2007,R2008,R2009	435037504R1	RN72K1J-750JE,Chip carbon
R2010,R2011,R2012	435037504R1	RN72K1J-750JE,Chip carbon
R2013,R2014,R2015	435037504R1	RN72K1J-750JE,Chip carbon
R2016,R2017,R2018	435037504R1	RN72K1J-750JE,Chip carbon
R2019,R2020,R2021	435037504R1	RN72K1J-750JE,Chip carbon
R2041,R2042	435032224R1	RN72K1J-222JE,Chip carbon

CIRCUIT NO.	PART NO.	DESCRIPTION
	Resistors	
R2043,R2044	435032224R1	RN72K1J-222JE,Chip carbon
R2045,R2065	435031034R1	RN72K1J-103JE,Chip carbon
R2046,R2055	435031024R1	RN72K1J-102JE,Chip carbon
R2047,R2057	435034734R1	RN72K1J-473JE,Chip carbon
R2048,R2053	435036824R1	RN72K1J-682JE,Chip carbon
R2049	435033324R1	RN72K1J-332JE,Chip carbon
R2050,R2058,R2059	435032214R1	RN72K1J-221JE,Chip carbon
R2051	435038244R1	RN72K1J-824JE,Chip carbon
R2052	435031524R1	RN72K1J-152JE,Chip carbon
R2054	435031214R1	RN72K1J-121JE,Chip carbon
R2056,R2061	435032724R1	RN72K1J-272JE,Chip carbon
R2060	435031234R1	RN72K1J-123JE,Chip carbon
R2062	435033334R1	RN72K1J-333JE,Chip carbon
R2063	435036804R1	RN72K1J-680JE,Chip carbon
R2064	435032224R1	RN72K1J-222JE,Chip carbon
R2066,R2067	435032214R1	RN72K1J-221JE,Chip carbon
R2070	435032204R1	RN72K1J-220JE,Chip carbon
R2071,R2072,R2073	435031044R1	RN72K1J-104JE,Chip carbon
R2074,R2075,R2076	435031044R1	RN72K1J-104JE,Chip carbon
R2077,R2078,R2079	435031044R1	RN72K1J-104JE,Chip carbon
R2080,R2081,R2082	435031044R1	RN72K1J-104JE,Chip carbon
R2083,R2084	435031044R1	RN72K1J-104JE,Chip carbon
R2085,R2086	435031044R1	RN72K1J-104JE,Chip carbon
R2088	435037504R1	RN72K1J-750JE,Chip carbon
R2089,R2090	435030004R1	RN72K1J-000JE,Chip carbon
R2091,R2096	435031024R1	RN72K1J-102JE,Chip carbon
R2092,R2097	435034714R1	RN72K1J-471JE,Chip carbon
R2093,R2098	435038204R1	RN72K1J-820JE,Chip carbon
R2094,R2095	435031214R1	RN72K1J-121JE,Chip carbon
R2101,R2102,R2103	435031024R1	RN72K1J-102JE,Chip carbon
R2104,R2105,R2106	435031024R1	RN72K1J-102JE,Chip carbon
R2107,R2108	435031024R1	RN72K1J-102JE,Chip carbon
R2109,R2111,R2112	435031014R1	RN72K1J-101JE,Chip carbon
R2110,R2113	435032224R1	RN72K1J-222JE,Chip carbon
R2114	435034724R1	RN72K1J-472JE,Chip carbon
R2115	435031024R1	RN72K1J-102JE,Chip carbon
R2116	435036814R1	RN72K1J-681JE,Chip carbon
R2121,R2122,R2123	435033304R1	RN72K1J-330JE,Chip carbon
R2124,R2125,R2126	435033304R1	RN72K1J-330JE,Chip carbon
R2127,R2128,R2129	435033304R1	RN72K1J-330JE,Chip carbon
R2130,R2131	435034724R1	RN72K1J-472JE,Chip carbon
R2132,R2133	435031014R1	RN72K1J-101JE,Chip carbon
R2134,R2135	435031224R1	RN72K1J-122JE,Chip carbon
R2141,R2142	435031224R1	RN72K1J-122JE,Chip carbon
R2143	435031014R1	RN72K1J-101JE,Chip carbon
R2144	435033304R1	RN72K1J-330JE,Chip carbon
R2145	435034724R1	RN72K1J-472JE,Chip carbon
R2161,R2163,R2165	435031014R1	RN72K1J-101JE,Chip carbon
R2162,R2164,R2166	435031044R1	RN72K1J-104JE,Chip carbon
R2167,R2169,R2171	435031014R1	RN72K1J-101JE,Chip carbon
R2168,R2170,R2172	435031044R1	RN72K1J-104JE,Chip carbon
R2173,R2174	435037504R1	RN72K1J-750JE,Chip carbon
R2175	435030004R1	RN72K1J-000JE,Chip carbon
R2176,R2177,R2178	435037504R1	RN72K1J-750JE,Chip carbon
R2181,R2182,R2183	435038204R1	RN72K1J-820JE,Chip carbon
R2184,R2185,R2186	435038204R1	RN72K1J-820JE,Chip carbon
R2187,R2188,R2189	435038204R1	RN72K1J-820JE,Chip carbon
R2190,R2191,R2192	435038204R1	RN72K1J-820JE,Chip carbon
R2201,R2202,R2203	435034754R1	RN72K1J-475JE,Chip carbon
R2204,R2205	435031024R1	RN72K1J-102JE,Chip carbon
R6916	435031014R1	RN72K1J-101JE,Chip carbon
R6926	435032234R1	RN72K1J-223JE,Chip carbon

CIRCUIT NO.	PART NO.	DESCRIPTION
	Relays	
RL2201,RL2202	25065645 or	NPL-2P1A-DC4.5-169 or
RL2203,RL2204	25065654 or	NRL-2P2A-DC4.5-172 or
RL2205	25065658	NRL-2P2A-DC4.5-173
	Terminals	
P2001,P2002	25045729	NPJ-10PDBY517
P2003	25045727	NPJ-15PDBY515
P2201	25045813	NPJ-12PDGLR593
P6803	25045720	NPJ-1PDP510
	Sockets	
JL6802A,JL6802B	25051088	NSCT-4P875
P2004	25051239	NSCT-14P1029
P2005	25051234	NSCT-9P1024
	Plug	
P2009B	25055236	NPLG-5P220

Display circuit PC board (NADIS-8406-1L/1M/1T)

CIRCUIT NO.	PART NO.	DESCRIPTION
	ICs	
Q7502	22241680AR2	M66005-0001AFP
	FL tube	
Q7501	212249A	HNA-16SM10T
	Remote sensor	
U7501	241336	PIC-37043TH2
	Transistors	
Q7503	2216175R2 or	KTC3875-GR or
	2213145R2	2SC2712-GR
Q7581, Q7583	2216190R2 or	KRC102S or
Q7701	2214470R2	RN1402
Q7582	2216190R2 or	KRC102S or
	2214470R2	RN1402 <O>
	Diodes	
D7501	224550820R2 or	UDZS8.2B or
	224660824R2	HZU8.2B
D7502,D7504	223234R2 or	1SS352 or
D7508	223269R2	1SS355
D7581	225290T	SEL4110R
D7582	225374T	SEL2E10C <O>
D7583	225291DT	SEL4910D-D
D7701	223234R2 or	1SS352 or
	223269R2	1SS355
	Coils	
L7501,L7502	233533M022R2 or	NCH-1587-022M or
	231237M022R2	NCH-1471
	Capacitors	
C7501,C7503	332161040R1	CK725F1E-104Z1,Chip ceramic
C7502	355783309	CE04W50V-33M,Elect.
C7504,C7505	332154730R1	CK725F1H-473Z1,Chip ceramic
C7506	332154730R1	CK725F1H-473Z1,Chip ceramic
C7507	375524744	MMT50V-474J,Plastic film
C7508,C7511	332161040R1	CK725F1E-104Z1,Chip ceramic
C7509	353721019	CE04W6.3V-100M(S),Elect.
C7510,C7512	342101014R1	CC725CH1H-101J1,Chip ceramic
C7513,C7533	332161040R1	CK725F1E-104Z1,Chip ceramic
C7514,C7705	353721019	CE04W6.3V-100M(S),Elect.
C7534	332154730R1	CK725F1H-473Z1,Chip ceramic
C7535,C7536	332161040R1	CK725F1E-104Z1,Chip ceramic
	Resistors	
R7501,R7502	435032214R1	RN72K1J-221JE,Chip carbon
	435032214R1	RN72K1J-221JE,Chip carbon
R7503	435032734R1	RN72K1J-273JE,Chip carbon
R7504,R7505	435033324R1	RN72K1J-332JE,Chip carbon
	435033324R1	RN72K1J-332JE,Chip carbon

CIRCUIT NO.	PART NO.	DESCRIPTION
	Resistors	
R7506,R7507	435031024R1	RN72K1J-102JE,Chip carbon
R7581	435032214R1	RN72K1J-221JE,Chip carbon
R7582	435038204R1	RN72K1J-820JE,Chip carbon <O>
R7583	435031814R1	RN72K1J-181JE,Chip carbon
R7588	435038204R1	RN72K1J-820JE,Chip carbon <O>
R7611,R7621	435033314R1	RN72K1J-331JE,Chip carbon
R7612,R7622	435034714R1	RN72K1J-471JE,Chip carbon
R7613,R7623	435035614R1	RN72K1J-561JE,Chip carbon
R7614,R7624	435038214R1	RN72K1J-821JE,Chip carbon
R7615,R7625	435031224R1	RN72K1J-122JE,Chip carbon
R7616,R7626	435032224R1	RN72K1J-222JE,Chip carbon
R7617,R7627	435033924R1	RN72K1J-392JE,Chip carbon
R7618,R7628	435031234R1	RN72K1J-123JE,Chip carbon
R7631,R7641	435033314R1	RN72K1J-331JE,Chip carbon
R7632,R7642	435034714R1	RN72K1J-471JE,Chip carbon
R7633,R7643	435035614R1	RN72K1J-561JE,Chip carbon
R7634,R7644	435038214R1	RN72K1J-821JE,Chip carbon
R7635,R7645	435031224R1	RN72K1J-122JE,Chip carbon
R7636,R7646	435032224R1	RN72K1J-222JE,Chip carbon
R7637,R7647	435033924R1	RN72K1J-392JE,Chip carbon
R7638	435031234R1	RN72K1J-123JE,Chip carbon
	Relay	
RL7701	25065610 or	NRL-2P1A-DC4.5-156 or
	25065645 or	NPL-2P1A-DC4.5-169 or
	25065654 or	NRL-2P2A-DC4.5-172 or
	25065658	NRL-2P2A-DC4.5-173
	Switches	
S7611,S7612	25035714 or	NPS-111-S677 or
S7613,S7614	25035718	NPS-111-S681
S7616,S7617	25035714 or	NPS-111-S677 or
S7618,S7619	25035718	NPS-111-S681
S7621,S7622	25035714 or	NPS-111-S677 or
S7623,S7624	25035718	NPS-111-S681
S7625,S7627	25035714 or	NPS-111-S677 or
S7628,S7629	25035718	NPS-111-S681
S7631,S7632	25035714 or	NPS-111-S677 or
S7633,S7634	25035718	NPS-111-S681
S7635,S7636	25035714 or	NPS-111-S677 or
S7637	25035718	NPS-111-S681
S7638,S7639	25035714 or	NPS-111-S677 or
	25035718	NPS-111-S681
S7641,S7642	25035714 or	NPS-111-S677 or
S7643,S7644	25035718	NPS-111-S681
S7645,S7646	25035714 or	NPS-111-S677 or
S7647,S7648	25035718	NPS-111-S681
	Sockets	
JL2501A	25051088	NSCT-4P875
JL7501A	25051089	NSCT-5P876
JL7701A	25051089	NSCT-5P876
JL7801A	25051090	NSCT-6P877
P7501A	25052360 or	NSCT-23P2257 or
	25052544	NSCT-23P2441
P7502A	25052244 or	NSCT-11P2141 or
	25052057 or	NSCT-11P1844 or
	25051855	NSCT-11P1642
	Holder	
Q7501A	27191222A	(FL)

Vidoe terminal PC board (NAVD-8407-1L/1M)
All models except European and Australian models

CIRCUIT NO.	PART NO.	DESCRIPTION
	ICs	
Q2001,Q2002	22241946R2	NJM2595M
Q2003	22241946R2	NJM2595M
Q2004	22241779	LC74763-9836
Q2011	22241221R2	TC9164AF
Q2021	22241849R2	MM1512
	Transistors	
Q2005	2216175R2 or	KTC3875-GR or
	2213145R2	2SC2712-GR
Q2006,Q2007	2215510R2	RN1443
Q2008,Q2009	2216185R2 or	KTA1504-GR or
Q2022	2214375R2	2SA1162-GR
Q2010	2214530R2 or	RN2402 or
	2216220R2	KRA102S
Q2012,Q2013	2215510R2	RN1443
Q2014,Q2015	2215510R2	RN1443
Q2016,Q2017	2215510R2	RN1443
Q2018,Q2019	2215510R2	RN1443
Q2020	2215510R2	RN1443
Q2201,Q2202	2216175R2 or	KTC3875-GR or
	2213145R2	2SC2712-GR
	Diodes	
D2001,D2002	223234R2 or	1SS352 or
D2003	223269R2	1SS355
D2201,D2202	223234R2 or	1SS352 or
	223269R2	1SS355
	Oscillators	
X2001	3010318	HC-49/U0314.318M
X2002	3010364	HC-49/U0317.734M <PT/WT/K/R/Q>
	Coils	
L2001,L2006	231292J056R2	NCH-1572
L2002,L2003	231237K022R2 or	NCH-1471 or
L2004,L2005	233533K022R2	NCH-1587-022K
	Capacitors	
C2001,C2002	332101025R1	CK725B1H-102K1,Chip ceramic
C2003	332101025R1	CK725B1H-102K1,Chip ceramic
C2004,C2005	394641007 or	CE04W16V-10M(VR) or
C2007,C2008	394741007	CE04W16V10M(SC),Elect.
C2006,C2009	332161040R1	CK725F1E-104Z1,Chip ceramic
C2010,C2011	342104704R1	CC725CH1H-470J1,Chip ceramic
C2012	342104704R1	CC725CH1H-470J1,Chip ceramic
C2013,C2014	394641007 or	CE04W16V-10M(VR) or
C2019,C2020	394741007	CE04W16V10M(SC),Elect.
C2015	332161040R1	CK725F1E-104Z1,Chip ceramic
C2016,C2017	342104704R1	CC725CH1H-470J1,Chip ceramic
C2018	342104704R1	CC725CH1H-470J1,Chip ceramic
C2021,C2022	332161040R1	CK725F1E-104Z1,Chip ceramic
C2023,C2024	394621017 or	CE04W6.3V-100M(VR) or
C2027,C2028	394721017	CE04W6.3V100M(SC),Elect.
C2025,C2026	332161040R1	CK725F1E-104Z1,Chip ceramic
C2029,C2030	332161040R1	CK725F1E-104Z1,Chip ceramic
C2031,C2032	394621017 or	CE04W6.3V-100M(VR) or
	394721017	CE04W6.3V100M(SC),Elect.
C2033	332161040R1	CK725F1E-104Z1,Chip ceramic
C2041	342101002R1	CC725CH1H-100D1,Chip ceramic
C2042	342101804R1	CC725CH1H-180J1,Chip ceramic
C2043	342101804R1	CC725CH1H-180J1,Chip ceramic <PT/WT/K/R/Q>
C2044	342100802R1	CC725CH1H-080D1,Chip ceramic <PT/WT/K/R/Q>
C2045,C2046	342104704R1	CC725CH1H-470J1,Chip ceramic
C2047,C2048	342104704R1	CC725CH1H-470J1,Chip ceramic

CIRCUIT NO.	PART NO.	DESCRIPTION
	Capacitors	
C2049	394680107 or	CE04W50V-1M(VR) or
	394780107	CE04W50V1.0M(SC),Elect.
C2050	342104704R1	CC725CH1H-470J1,Chip ceramic
C2051	394624717 or	CE04W6.3V-470M(VR) or
	394724717	CE04W6.3V470M(SC),Elect.
C2052	332161040R1	CK725F1E-104Z1,Chip ceramic
C2053	394621017 or	CE04W6.3V-100M(VR) or
	394721017	CE04W6.3V100M(SC),Elect.
C2054	394683397	CE04W50V-0.33M(VR),Elect.
C2055	332101225R1	CK725B1H-122K1,Chip ceramic
C2056	374726824	ECQ-B50V-682J,Plastic film
C2057	394680107 or	CE04W50V-1M(VR) or
	394780107	CE04W50V1.0M(SC),Elect.
C2058	374722234	ECQ-B50V-223J,Plastic film
C2059	342102204R1	CC725CH1H-220J1,Chip ceramic
C2060	342102704R1	CC725CH1H-270J1,Chip ceramic
C2061	394684797 or	CE04W50V-0.47M(VR) or
	394784797	CE04W50V0.47M(SC),Elect.
C2063	375524744	MMT50V-474J,Plastic film
C2064	394641007 or	CE04W16V-10M(VR) or
	394741007	CE04W16V10M(SC),Elect.
C2065	394621017 or	CE04W6.3V-100M(VR) or
	394721017	CE04W6.3V100M(SC),Elect.
C2066,C2067	332161040R1	CK725F1E-104Z1,Chip ceramic
C2068	332161040R1	CK725F1E-104Z1,Chip ceramic
C2071,C2072	332161040R1	CK725F1E-104Z1,Chip ceramic
C2073	394624717 or	CE04W6.3V-470M(VR) or
	394724717	CE04W6.3V470M(SC),Elect.
C2074,C2076	342111024R1	CC725CH1E-102J1,Chip ceramic
C2075,C2077	342102214R1	CC725CH1H-221J1,Chip ceramic
C2078	394624717 or	CE04W6.3V-470M(VR) or
	394724717	CE04W6.3V470M(SC),Elect.
C2080	394642207 or	CE04W16V-22M(VR) or
	394742207	CE04W16V22M(SC),Elect.
C2081,C2082	394621017 or	CE04W6.3V-100M(VR) or
	394721017	CE04W6.3V100M(SC),Elect.
C2083,C2084	332161040R1	CK725F1E-104Z1,Chip ceramic
C2090	332161040R1	CK725F1E-104Z1,Chip ceramic
C2091,C2092	394641007 or	CE04W16V-10M(VR) or
	394741007	CE04W16V10M(SC),Elect.
C2201,C2202	332101025R1	CK725B1H-102K1,Chip ceramic
C6887	342111024R1	CC725CH1E-102J1,Chip ceramic
C6891	332101025R1	CK725B1H-102K1,Chip ceramic
	Resistors	
R2001,R2002	435031034R1	RN72K1J-103JE,Chip carbon
R2003	435031034R1	RN72K1J-103JE,Chip carbon
R2004,R2005	435037504R1	RN72K1J-750JE,Chip carbon
R2006,R2007	435037504R1	RN72K1J-750JE,Chip carbon
R2008,R2009	435037504R1	RN72K1J-750JE,Chip carbon
R2010,R2011	435037504R1	RN72K1J-750JE,Chip carbon
R2012,R2013	435037504R1	RN72K1J-750JE,Chip carbon
R2014,R2015	435037504R1	RN72K1J-750JE,Chip carbon
R2016,R2017	435037504R1	RN72K1J-750JE,Chip carbon
R2018,R2019	435037504R1	RN72K1J-750JE,Chip carbon
R2020,R2021	435037504R1	RN72K1J-750JE,Chip carbon
R2031,R2032	435030004R1	RN72K1J-000JE,Chip carbon
R2033,R2034	435030004R1	RN72K1J-000JE,Chip carbon
R2041,R2042	435032224R1	RN72K1J-222JE,Chip carbon
R2043,R2044	435032224R1	RN72K1J-222JE,Chip carbon
R2045	435031034R1	RN72K1J-103JE,Chip carbon
R2046	435031024R1	RN72K1J-102JE,Chip carbon
R2047	435034734R1	RN72K1J-473JE,Chip carbon

CIRCUIT NO.	PART NO.	DESCRIPTION
	Resistors	
R2048,R2053	435036824R1	RN72K1J-682JE,Chip carbon
R2049	435033324R1	RN72K1J-332JE,Chip carbon
R2050	435032214R1	RN72K1J-221JE,Chip carbon
R2051	435038244R1	RN72K1J-824JE,Chip carbon
R2052	435031524R1	RN72K1J-152JE,Chip carbon
R2054	435031214R1	RN72K1J-121JE,Chip carbon
R2055	435031024R1	RN72K1J-102JE,Chip carbon
R2056,R2061	435032724R1	RN72K1J-272JE,Chip carbon
R2057	435034734R1	RN72K1J-473JE,Chip carbon
R2058,R2059	435032214R1	RN72K1J-221JE,Chip carbon
R2060	435031234R1	RN72K1J-123JE,Chip carbon
R2062	435033334R1	RN72K1J-333JE,Chip carbon
R2063	435036804R1	RN72K1J-680JE,Chip carbon
R2064	435032224R1	RN72K1J-222JE,Chip carbon
R2065	435031034R1	RN72K1J-103JE,Chip carbon
R2066,R2067	435032214R1	RN72K1J-221JE,Chip carbon
R2069	435030004R1	RN72K1J-000JE,Chip carbon
R2070	435032204R1	RN72K1J-220JE,Chip carbon
R2071,R2072	435031044R1	RN72K1J-104JE,Chip carbon
R2073,R2074	435031044R1	RN72K1J-104JE,Chip carbon
R2075,R2076	435031044R1	RN72K1J-104JE,Chip carbon
R2077,R2078	435031044R1	RN72K1J-104JE,Chip carbon
R2079,R2080	435031044R1	RN72K1J-104JE,Chip carbon
R2081,R2082	435031044R1	RN72K1J-104JE,Chip carbon
R2083,R2084	435031044R1	RN72K1J-104JE,Chip carbon
R2085,R2086	435031044R1	RN72K1J-104JE,Chip carbon
R2087	435033314R1	RN72K1J-331JE,Chip carbon
R2088,R2093	435038204R1	RN72K1J-820JE,Chip carbon
R2089	435030394R1	RN72K1J-039JE,Chip carbon
R2090	435030004R1	RN72K1J-000JE,Chip carbon
R2091	435031024R1	RN72K1J-102JE,Chip carbon
R2092	435034714R1	RN72K1J-471JE,Chip carbon
R2094,R2095	435031214R1	RN72K1J-121JE,Chip carbon
R2096	435031024R1	RN72K1J-102JE,Chip carbon
R2097	435034714R1	RN72K1J-471JE,Chip carbon
R2098	435038204R1	RN72K1J-820JE,Chip carbon
R2099	435030274R1	RN72K1J-027JE,Chip carbon
R2201,R2202	435034754R1	RN72K1J-475JE,Chip carbon
R2203	435034754R1	RN72K1J-475JE,Chip carbon
R2204,R2205	435031024R1	RN72K1J-102JE,Chip carbon
R2101,R2102	435031024R1	RN72K1J-102JE,Chip carbon
R2103,R2104	435031024R1	RN72K1J-102JE,Chip carbon
R2105,R2106	435031024R1	RN72K1J-102JE,Chip carbon
R2107,R2108	435031024R1	RN72K1J-102JE,Chip carbon
R6916	435031014R1	RN72K1J-101JE,Chip carbon
R6926	435032234R1	RN72K1J-223JE,Chip carbon
	Relays	
RL2201,RL2202	25065645 or	NPL-2P1A-DC4.5-169 or
RL2203,RL2204	25065654 or	NRL-2P2A-DC4.5-172 or
RL2205	25065658	NRL-2P2A-DC4.5-173
	Terminals	
P2001,P2002	25045729	NPJ-10PDBY517
P2003	25045727	NPJ-15PDBY515
P2201	25045813	NPJ-12PDGLR593
P6803	25045720	NPJ-1PDP510
	Sockets	
JL6802A,JL6802B	25051088	NSCT-4P875
P2004	25051239	NSCT-14P1029
P2005	25051234	NSCT-9P1024
	Plug	
P2009B	25055236	NPLG-5P220

Vidoe 4 terminal PC board (NAVD-8409-1L/1M/1T)

CIRCUIT NO.	PART NO.	DESCRIPTION
	Capacitors	
C2501,C2502	342104714R1	CC725CH1H-471J1,Chip ceramic
C2503,C2504	332161040R1	CK725F1E-104Z1,Chip ceramic
	Resistors	
R2501,R2502	435033314R1	RN72K1J-331JE,Chip carbon
R2503,R2504	435037504R1	RN72K1J-750JE,Chip carbon
R2505	435037504R1	RN72K1J-750JE,Chip carbon
	Terminal	
P2503	25045680	NPJ-7PDB477
	Sockets	
JL2501B	25051088	NSCT-4P875
P2009A	2009990792UL	NSAS-10P1159
	Plug	
P2501B	25055371	NPLG-7P354

Front optical terminal PC board (NADG-8410-1L/1M/1T)

CIRCUIT NO.	PART NO.	DESCRIPTION
	Photo coupler	
U2601	24120108	GP1FA513RZ
	Coil	
L2601	233533M022R2 or 231237M022R2	NCH-1587-022M or NCH-1471
	Capacitors	
C2601	394621017 or 394721017	CE04W6.3V-100M(VR) or CE04W6.3V100M(SC),Elect.
C2602	332161040R1	CK725F1E-104Z1,Chip ceramic
	Resistor	
R2601	435032214R1	RN72K1J-221JE,Chip carbon
	Socket	
JL7503A	25051087	NSCT-3P874

Volume PC board (NASW-8411-1L/1M/1T)

CIRCUIT NO.	PART NO.	DESCRIPTION
	Transistor	
Q7584	2216190R2 or 2214470R2	KRC102S or RN1402
	Diodes	
D7584,D7586	225437	SELU2E10C-P
	Capacitors	
C7515,C7516	332161040R1	CK725F1E-104Z1,Chip ceramic
	Resistors	
R7584,R7586	435038204R1	RN72K1J-820JE,Chip carbon
R7589,R7591	435038204R1	RN72K1J-820JE,Chip carbon
	Rotary encoder	
S7501	25065655	EC12E2425
	Socket	
JL7501B	25051089	NSCT-5P876

Headphone terminal PC board (NAETC-8412-1L/1M/1T)

CIRCUIT NO.	PART NO.	DESCRIPTION
	IC	
Q7801	22241383R2	NJM4565M-D
	Transistor	
Q7802	2213631	RN1241-A
	Diode	
D7801	224470562	MTZJ5.6B
	Coils	
L7701,L7703 L7704	233533M022R2 or 231237M022R2	NCH-1587-022M or NCH-1471
L7801,L7802 L7803,L7804	233533M022R2 or 231237M022R2	NCH-1587-022M or NCH-1471

CIRCUIT NO.	PART NO.	DESCRIPTION
	Capacitors	
C7701,C7702	342111024R1	CC725CH1E-102J1,Chip ceramic
C7703	374722215	ECQ-B50V-221K,Plastic film
C7704	342101014R1	CC725CH1H-101J1,Chip ceramic
C7801,C7805	394641007 or	CE04W16V-10M(VR) or
	394741007	CE04W16V10M(SC),Elect.
C7802	342103304R1	CC725CH1H-330J1,Chip ceramic
C7803	332161040R1	CK725F1E-104Z1,Chip ceramic
C7804,C7806	394641017 or	CE04W16V-100M(VR) or
	394741017	CE04W16V100M(SC),Elect.
C7807	332161040R1	CK725F1E-104Z1,Chip ceramic
C7808,C7809	342101014R1	CC725CH1H-101J1,Chip ceramic
C7810	394642207 or	CE04W16V-22M(VR) or
	394742207	CE04W16V22M(SC),Elect.
	Resistors	
R7808	417344714	R16J-470,Carbon
R7809	417341034	R16J-10K,Carbonm
R7801	435031014R1	RN72K1J-101JE,Chip carbon
R7802	435034734R1	RN72K1J-473JE,Chip carbon
R7803	435034724R1	RN72K1J-472JE,Chip carbon
R7804	435034734R1	RN72K1J-473JE,Chip carbon
R7805	435032214R1	RN72K1J-221JE,Chip carbon
R7806	435033334R1	RN72K1J-333JE,Chip carbon
R7807	435034714R1	RN72K1J-471JE,Chip carbon
	Terminals	
P7705	25045724	YKB21-5005
P7801	25045579	YKB21-5294
	Plugs	
JL7701B	25055626	NPLG-5P588
JL7801B	25055627	NPLG-6P589

ONKYO CORPORATION
Sales & Product Planning Div. : 2-1, Nisshin-cho, Neyagawa-shi, OSAKA 572-8540, JAPAN
Tel: 072-831-8023 Fax: 072-831-8124

ONKYO U.S.A. CORPORATION
18 Park Way, Upper Saddle River, N.J. 07458, U.S.A.
Tel: 201-785-2600 Fax: 201-785-2650 http://www.onkyousa.com

ONKYO EUROPE ELECTRONICS GmbH
Liegnitzerstrasse 6, 82194 Groebenzell, GERMANY
Tel: +49-8142-4401-0 Fax: +49-8142-4401-555 http://www.onkyo.net

ONKYO CHINA LIMITED
Units 2102-2107, Metroplaza Tower I, 223 Hing Fong Road, Kwai Chung,
N.T., HONG KONG Tel: 852-2429-3118 Fax: 852-2428-9039

ONKYO
HOMEPAGE
http://www.onkyo.com/