Cyber Attack Simulation and Detection in Digital Substation

Doney Abraham
Information Security and Communication Technology
Norwegian University of Science and Technology
Gjøvik, Norway
doney.abraham@ntnu.no

Filip Holik
Information Security and Communication Technology
Norwegian University of Science and Technology
Gjøvik, Norway
filip.holik@ntnu.no

Alemayehu Gebremedhin
Department of Manufacturing and Civil Engineering
Norwegian University of Science and Technology
Gjøvik, Norway
alemayehu.gebremedhin@ntnu.no

Sule Yildirim Yayilgan
Information Security and Communication Technology
Norwegian University of Science and Technology
Gjøvik, Norway
sule.yildirim@ntnu.no

Santiago Sanchez Acevedo
Department of Energy Systems
SINTEF Energy Research
Trondheim, Norway
santiago.sanchez@sintef.no

2023 Third International Conference on Secure Cyber Computing and Communication (ICSCCC) | 979-8-3503-0071-0/23/$31.00 ©2023 IEEE | DOI: 10.1109/ICSCCC58608.2023.10176955

***Abstract*—Transforming electrical grids into digital systems has brought many advantages, but it has also introduced new vulnerabilities that cyber attackers can exploit. Therefore, early detection of these attacks is crucial to minimize the impact on power grid operations. This paper presents the results of our investigation into the simulation and detection of cyber attacks in digital substations. Our study focuses on comparing multiple machine learning algorithms for detecting replay attacks and false data injections. The results of our study show that the best model for replay attack detection is the Logistic Regression with an accuracy of 94%. On the other hand, for false data injection detection, multiple models show high precision, recall, F1-score, and accuracy, with the best model in terms of computation time being Support Vector Machine. Our findings provide valuable insights into using machine learning algorithms to simulate and detect cyber attacks in digital substations.**

***Index Terms*—Smartgrids, Digital Substation, Machine Learning, Deep Learning, Replay Attack, False Data Injection, Cyber Attack Detection**

I. Introduction

A Digital Substation (DS) consists of several physical and cyber infrastructures in switch yards, and substation buildings of which values of analogue signals (voltage, current) are sampled and digitized [1]. DS is based on IEC-61850 process bus technology that replaces most hardwired copper connections in a traditional substation with process bus technology over fibre cabling [2]. IEC-61850 is a global standard for substation automation that has revolutionized the way DS is configured and maintained [3]. IEC-61850 also specifies the physical topology, network protocols and object modelling and has the following goals: interoperability, long-term stability and simplified contribution. In addition, it introduces three new protocols: GOOSE (Generic Object-Oriented Substation Event) for inter Intelligent Electronics Device (IED) communication, SV (Sample Values) for communication between Merging Units (MU) and IED and MMS (Manufacturing Messaging Specification) for communication between Supervisory Control and Data Acquisition (SCADA) and IEDs over Ethernet [3]. Despite the benefits of IEC-61850, from a security perspective, DS have various cyber-security threats [4], [5]. Cyber attacks in a DS include replay attacks, false data injection (FDI), eavesdropping, DoS (Denial of Service), flooding, and poisoning, to name a few [6], [7].

Cyber-Physical systems like DS are part of a country's critical infrastructure, and their uninterrupted operation is of utmost importance [8]. Hence the timely detection of cyber attacks on DS will enable operators and consumers of the grid to supply and consume electricity with a lower chance of potential outages. However, developing and deploying smart detection mechanisms against cyber attacks in a real DS is difficult without testing. To enable this process, simulation of cyber attacks in a testbed is required that has similar characteristics compared to a real DS. It will also lead to efficient detection of cyber attacks and easy deployment to real DS at a later stage.

This paper aims to investigate the simulation and detection of cyber attacks in DS by comparing multiple machine learning algorithms and to produce valuable information and understanding into using these algorithms for early detection

This research was funded by the ECODIS project funded by the Research Council of Norway under grant number RCN 296550.

Authorized licensed use limited to: University of Glasgow. Downloaded on November 14,2025 at 11:31:47 UTC from IEEE Xplore. Restrictions apply.

and minimising the impact of such attacks on power grid operations. The related work in this area is outlined in Section II. Section III provides details about the setup of the testing platform, various devices used and the different scenarios used to conduct this experiment. The different processes involved in the experiment like collection of data, data pre-processing and detection of cyber attack is provided in Section IV. Different machine learning and deep learning-based algorithms have been used in detecting attacks in the experiment. Section V shows the results of these algorithms used in Section IV; their computation time, accuracy and precision, among other parameters, to detect the cyber attack. A conclusion is drawn in Section VI and outlines future plans to extend the experiment.

II. Related Work

Existing research works like [9], [10] addresses cyber security issues, challenges, attacks and defences in the area of Smart Grids. Many DS network protocols do not cover security aspects and most DS devices like IEDs are designed to perform specific functions related to electrical domain without built-in security mechanisms. Any overhead introduced by security functions may harm proper system operation due to the fact that IEDs have time critical operations. Functionality of a DS prioritize availability and real time operation over security. Traditional mechanisms like complex encryption algorithms are not supported by IEDs either.

A survey study [11] compiled a list of Intrusion Detection and Prevention Systems for Smart Grids, analyzing 37 cases in AMI, SCADA systems, substations, and synchrophasors. The study found that machine learning was used for cyber attack detection but not specifically for DS.

Paper [12] presents a detailed analysis of attacks that exploits IEC-61850 and the efforts to prevent these attacks. Even though [12] uses some novel approaches to detect cyber attacks, substation networks still need to be well explored. A Novel Approach for mitigation of Replay Attacks in Smartgrids Using IEC-61850 Standard is presented by [14]. Although [14] presents methods to detect replay attacks in smartgrids, it does not explore the usage of machine learning methods to detect such attacks in DS.

Authors in [13] have used deep learning methods to detect and classify attacks but only on AMI and not in DS. [15] introduces two approaches to enhance cybersecurity in substation networks using either neural networks or formal methods. Both methods showed an accuracy of over 90% in experiments on a real test bed, with the formal method achieving better performance. [16] explores a technique for detecting IoT cybersecurity threats in a smart city using machine learning and ensemble methods, with results indicating the stacking ensemble model outperforms other models. [20] presents an anomaly detection method for improving the cybersecurity of IEC-61850-based Substation Automation systems, using pre-processing, Expect Maximization, and One-class SVM techniques.

In our work, we simulate FDI and replay attacks within a controlled DS environment that uses real devices in order to collect data. We also evaluate the performance of various machine learning methods to detect these attacks using the data collected. This study innovatively compares multiple machine learning algorithms for detecting cyber attacks in digital substations, comprehensively evaluating strengths and weaknesses and identifying the most effective approach. The inclusion of deep learning algorithms offers valuable insights into the field.

III. Experiment Setup

The experiment focuses on cyber attacks on GOOSE messages, especially FDI and replay attacks. The purpose of a replay attack is to resend a message that was already sent without making any changes to the contents of the message. This can be done immediately after the original message has been transmitted or after a certain delay.

A. Devices used for the experiment

This section describes the topology of the laboratory setup for the experiment. The testbed [18] for cyber-physical power systems at the Norwegian National Smart-Grid laboratory has been adapted for conducting this study. It is located in Trondheim, Norway and managed in collaboration with Norwegian University of Science and Technology (NTNU) and SINTEF Energy Research. Fig. 1 shows the setup.

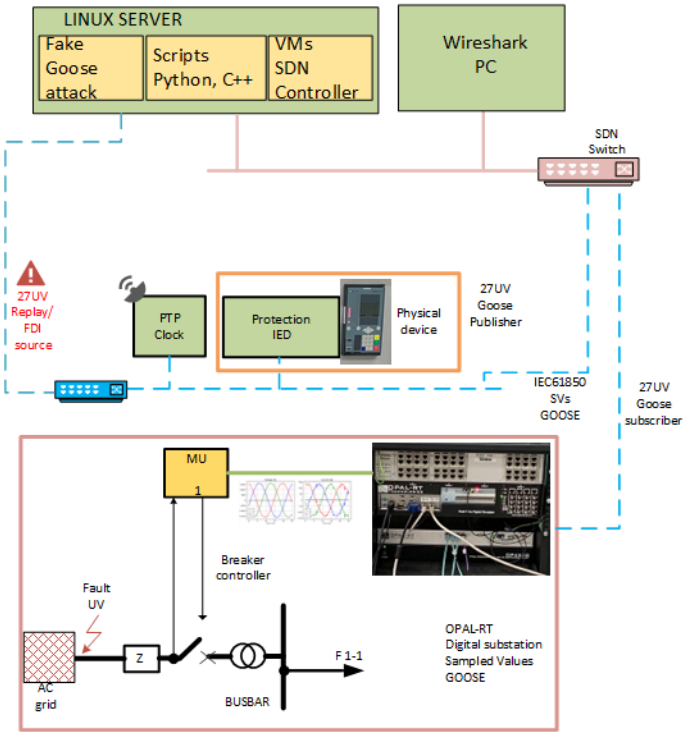

Fig. 1. Topology of Experiment.

Following are the components used in the setup:

1) Intelligent Electronic Device (IED): Microprocessor devices that control power system switching devices [2].

Authorized licensed use limited to: University of Glasgow. Downloaded on November 14,2025 at 11:31:47 UTC from IEEE Xplore. Restrictions apply.

2) Clock synchronized with GPS: Grand master clock of the process bus. A SEL-2488 is used in this case with IEEE 1588 Precision Time Protocol (PTP).
3) Digital real time simulator (DRTS): A real-time simulator from OPAL-RT is used for emulating the electric power network. Besides, DRTS monitors the physical devices in the network. It includes license for IEC-61850 communication protocol among other protocols like IEC 60870-5-104 and DNP3. For the experiments in this paper the DRTS subscribes to GOOSE messages to open or close the grid breaker under a fault trip event on the electrical grid. The DRTS streams the sampled values of voltages and current measured in the simulated electric grid. Additionally, the DRTS is synchronized with IRIG-B (Inter-Range Instrumentation Group-B).
4) The setup has a configuration PC with HMI software for the IED and configuration tools.
5) Substation switches: They are used for interconnecting various substation devices and traffic forwarding. Additionally, the switches count with PTP to support synchronization of the IED.
6) Linux Server: In the experiment a server is used as an attacker device. The Linux server processes the GOOSE and SV messages in the network. This is used to generate fake Undervoltage GOOSE messages. Therefore, it replays the GOOSE packets that represent the attack.

B. Scenarios

As mentioned in the previous section, there are two main scenarios considered for the experiment. The first one is the normal scenario where the IED in the substation sends packets every second to share and update its status. These contain mainly the Undervoltage GOOSE messages. Each GOOSE frame transmission involves the increment of sqNum (Sequence Number) but stNum (Status Number) remains the same. This data is captured for one hour.

For the attacks scenario, replay attack and FDI are considered. For GOOSE messages in stable situations when no event occurs, sqNum is increased for each transmission. If an event in the power system substation occurs, e.g. an Undervoltage fault, then the sqNum field is set to 0, the stNum is increased, and a new GOOSE message is sent. In this experiment, replay attacks were simulated by replaying 20 messages every 1.3 seconds, and data was captured for an additional hour to evaluate the system's response to such attacks. Subsequently, stNum values were modified to simulate an FDI attack under the same setup.

The Linux server is used for the attack simulation. First, legitimate traffic is captured, replayed and modified by the Scapy tool [25]. Replay and FDI messages are then broadcasted together with normal traffic. The scope of these messages is shown as the blue dashed lines representing the process bus. The orange line represents a management connection as show in Fig. 1.

TABLE I
BASIC FEATURES OF GOOSE MESSAGE

Feature Name	Description	tshark Name
GOOSE APPID	Application Identification	goose.appid
GOOSE Length	GOOSE message length	goose.length
GOOSE gocbRef	GOOSE control block reference	goose.gocbRef
GOOSE TTL	Maximum wait time for message	goose.timeAllowedtoLive
GOOSE dataset	Object reference of control block	goose.datSet
GOOSE goID	GOOSE message identification	googe.goID
GOOSE time	Time to stNum increase	goose.t
GOOSE stNum	Status number	goose.stNum
GOOSE sqNum	Sequence number	goose.sqNum
GOOSE confRev	Configuration revision	goose.confRev
GOOSE numDataSet Entries	Number of dataset entries	goose.numDatSetEntries
GOOSE data	Variable sensor data	goose.data
Time of packet	Time of packet recording	frame.time
Time interval	Time interval from the previous packet	frame.time_delta
Interval_between_devices	Time interval between use of field devices	NA
Interval_between_state_info	Time interval between control command or state information retrieval	NA

C. GOOSE message features

Table I shows, the basic features of a GOOSE message from literature reviews [19], [20]. These are extracted from network packet headers and can be seen in captured messages for example with the Wireshark tool [21]. The first 2 columns show the feature name and its description while the last column referred to the protocol analyzer name tshark [22] which reads previously captured network file and decodes from those packets to a standard output (comma separated value (csv) files). These csv files are in turn used in machine learning algorithms which is described in further sections.

IV. EXPERIMENT PROCESS

A. Data Collection

The dataset used for this experiment was generated based on the topology as shown in Fig. 1. It consisted of the components listed in the previous section where IED communicate with each other using the GOOSE protocol defined in the IEC-61850 standard. GOOSE network packets were generated to represent normal and attack scenarios. The data capture time limit was set to 1 hour, which represented a reasonable balance between getting enough data for sufficient machine learning precision and the laboratory utilization.

B. Data Pre-processing

Once the GOOSE message features were identified from the literature, the next step in the experiment was to pre-process the data collected using Wireshark. Following are the main steps involved in the experiment for this process.

1) Identify relevant features required for the experiment from GOOSE messages. From the datasets that we used in this experiment, only the following features were found relevant: Source, Destination, Goose GoID, Timestamp, Status Number(stNum), Sequence Number(sqNum), Data(boolean), Data(bit-string).
2) Use tshark scripts to convert wireshark files (pcap format) to machine learning readable format (csv). The tshark scripts used in the experiment to extract data from wireshark files is uploaded in our GitHub page [26]:
3) Filter out and remove non-goose messages.

Authorized licensed use limited to: University of Glasgow. Downloaded on November 14,2025 at 11:31:47 UTC from IEEE Xplore. Restrictions apply.

4) Label data rows (0 for normal and 1 for attack). This labelling is done manually based on knowledge by a domain expert.
5) Balance the dataset since both classes' instances (0 and 1) is significantly different. Our experiment does this by either oversampling the minority class or undersampling the majority class.
6) Impute missing values. Our experiment used *SimpleImputer* to impute missing values in the *stNum*column.
7) Used feature engineering. Our experiment created a new feature *goose_interaction* that is an interaction term between *stNum* and *gooseid*. It can help the model understand the relationship between these features and the target variable.
8) Train different algorithms as mentioned in the next section.

C. Machine Learning based anomaly detection in DS

Machine learning is an area of computation algorithms that can learn from its surrounding conditions by mirroring intelligence of humans [24]. It can be classified into following modes of operation: Supervised, Unsupervised and Semi-Supervised. The instances of datasets are labelled for both the training and test datasets in supervised learning. Our experiments used labelled datasets. The main advantage of using machine learning here is to detect zero-day attacks by adapting the algorithms to detect new types of attacks. This is done by learning from past GOOSE events especially from the parameters *sqNum* and *stNum* as mentioned previously. GOOSE messages are triggered as part of events for example in the event of a circuit that breaks and generally these are low in number, so *stNum* should also be low value. However if there is an intruder, there is a possibility that the intruder generates several events to interrupt the system causing *stNum* values to be higher and *sqNum* to be lower. Different machine learning algorithms can learn from these past events and hence train the models. So when the raw GOOSE message arrives, the system can extract relevant features and classify it as an intrusion or normal event based on these trained models.

As stated in the previous section, firstly, attack-free data was generated using the experimental setup and captured using Wireshark for over one hour. Next, GOOSE messages were extracted from these captured data and used to train various machine learning algorithms. In this study, we further investigated the effectiveness of our proposed anomaly detection system by introducing two different types of attacks, namely FDI and replay attacks. As a result, we generated 41185 data points for the replay attack and 11123 for the FDI attack. Finally, using the function 'train-test-split' from the 'scikit-learn' library, 20% of randomly selected data points from both replay and FDI attacks were chosen for testing the machine learning algorithms. The following section presents the results obtained from testing these machine learning algorithms.

Table II shows a sample of a GOOSE message extracted from one of the IED communications in the captured traffic during the simulated replay attack.

TABLE II
GOOSE MESSAGE SAMPLE

Field	Value
ETHERNET 2	
Src	b4:b1:5a:0a:b4:ef
Dst	00:0c:cd:01:00:09
GOOSE	
APPID	0x0001
Length	192
Reserved 1	0x0000
Reserved 2	0x0000
GOOSE PDU	
gocbRef	SIPV13p1_27Undervoltage1/LLN0GOControl_DataSet
timeAllowedtoLive	3000
datSet	SIPV13p1_27Undervoltage1/LLN0$DataSet
goID	SIP/V13p1_27Undervoltage1/LLN0/Control_DataSet
t	Jun 16, 2022 22:20:37.478207409 UTC
stNum	2205
sqNum	0
simulation	False
confRev	10001
ndsCom	False
numDatSetEntries	2
allData (2 items)	
boolean	True
Padding	3
bit-string	0000

The following machine learning and deep learning models were used in this experiment:

1) Random Forest Classifier (RFC): is an ensemble learning method for classification that aggregates the results of multiple decision trees built on different sub-samples of the training data [23]. The default parameters of the RandomForestClassifier in scikit-learn library are used in the experiment.
2) GMM (Gaussian Mixture Model): is a probabilistic model for representing a mixture of multiple Gaussian distributions to cluster data points and make predictions. In this GMM, we set the n_components (number of Gaussian distributions in the mixture) to 2.
3) Support Vector Machines (SVM): is a supervised learning algorithm used for classification and regression that finds the hyperplane in high-dimensional space to separate data into classes [27]. The parameters used in this SVM model are the default parameters of the SVC class, which are a radial basis function (RBF) kernel and a regularization parameter C of 1.0.
4) Neural Network: We have used the scikit-learn's MLPClassifier, a Neural Network model for multi-layer perceptron (MLP) classification, which has parameters for the number of hidden layers, activation functions, solver, and regularization, among others. Our experiment uses the default parameters of MLPClassifier.
5) KNN (K-Nearest Neighbors): is a non-parametric, instance-based, supervised learning algorithm that classifies a given data point based on the majority class of its k-nearest neighbours in the feature space [28]. The parameters used in this KNN model are n_neighbors = 3, which specifies the number of nearest neighbours to be considered for voting in classification.

Authorized licensed use limited to: University of Glasgow. Downloaded on November 14,2025 at 11:31:47 UTC from IEEE Xplore. Restrictions apply.

6) Autoencoder: is used to reduce feature space dimensions and obtain an encoded representation of input data. Here the autoencoder is a 4-layer Neural Network with 64, 32, 64 units and relu activation functions, trained with mean squared error loss and adam optimizer for 100 epochs with a batch size of 32, and the encoded data is then used to train KNN Classifier.
7) Isolation Forest: is an unsupervised machine learning algorithm for anomaly detection by isolating observations with randomly selected features [29]. The parameters for our experiment include contamination (proportion of outliers), whose value is set to 0.1.
8) One-Class SVM: is an algorithm that learns to identify the regular class from data by modelling it as an "ellipse" around the mean in feature space and rejecting examples that fall outside this boundary as anomalies. Our experiment has a parameter 'nu', which is set to 0.1 and controls the percentage of outliers.
9) Logistic Regression: is a statistical method for binary and multi-class classification that models the relationship between the dependent variable and independent variables using a logistic function. The parameters used in our experiment are the default ones from scikit-learn's LogisticRegression class.
10) Convolutional Neural Network (CNN): is a deep learning model that uses convolutional layers to analyze and learn spatial hierarchies from input data. The parameters used in this CNN include several filters (32) for the Conv2D layer, kernel size (3, 1), activation function ('relu'), pool size (2, 1) for the MaxPooling2D layer, number of neurons (64) in the Dense layer, dropout rate (0.5), output activation function ('sigmoid'), loss function ('binary_crossentropy'), optimizer ('adam'), number of epochs (10) and batch size (32).
11) Clustering with KMeans: groups similar data points into clusters based on their feature similarity. Here cluster size of 2 is used.
12) Recurrent Neural Network (RNN): is a type of neural network that uses connections between units to process sequences of inputs, allowing it to handle sequential or time-series data. The RNN model uses a SimpleRNN layer with 128 hidden units, a dropout layer with a rate of 0.2 to prevent overfitting, a dense layer for prediction with a sigmoid activation function, and is trained for 10 epochs with a batch size of 32 using the binary cross-entropy loss and the Adam optimizer, with accuracy as a metric.
13) Gradient Boosting: is an ensemble machine learning technique combining the predictions of multiple weak models to make a strong prediction using a gradient descent optimization algorithm. Our experiment uses default parameters.
14) Deep Belief Networks (DBN): are generative graphical models that combine several restricted Boltzmann machines to form a deep network. Our DBN model uses the BernoulliRBM and Logistic Regression with BernoulliRBM having n_components=50, learning_rate=0.01, n_iter=20 and random_state=0 and Logistic Regression having C=1000.0 and max_iter=10000.

V. Results and Discussions

In this experiment, we classified normal data as 0 and attack data as 1, resulting in an imbalanced dataset with 12.14% of normal data and 87.86% of attack data for the replay attack dataset. Similarly, for the FDI attack dataset, the distribution of normal to attack data was 39.51% and 60.49%, respectively. Due to the imbalance between normal and attack data, we employed data balancing techniques to improve the performance of machine learning models. Specifically, we used oversampling and undersampling techniques to balance the dataset by reducing the bias towards the majority class and increasing the accuracy of the minority class predictions. Hence, after evaluating each machine learning algorithm without data balancing, we applied both oversampling and undersampling techniques. Then, the best results were compared with other models using various metrics such as computation time, precision, recall, F1-Score, and accuracy [30]. These metrics helped us to evaluate the performance of different machine learning algorithms and determine the most suitable approach for detecting replay and FDI attacks in the dataset. Table III shows the results of running the different machine learning and deep learning algorithms described in the previous section.

The results show that RFC is the best model for replay attack detection based on the classification report for both normal and attack labels(class 0 and 1, respectively). It achieved an accuracy of 0.94 and a precision of 1.00 for class 0 and 0.94 for class 1, with a recall of 0.54 for class 0 and 1.00 for class 1. While Logistic Regression also showed similar results in terms of accuracy, precision, recall, and F1-score, the RFC model outperformed it based on the metrics used in the study. However, in terms of computational time, Logistic Regression was faster than RFC. The experiment also showed that most algorithms were able to detect replay attacks from normal operations. As for the FDI attack detection, the best models are Random Forest, GMM, SVM, Neural Network, KNN, Logistic Regression, CNN, Clustering with Kmeans, RNN, and Gradient Boosting. These models have the highest precision, recall, F1-score, and accuracy, which are all close to or equal to 1.00. However, if we also consider computation time, the best model would be SVM with a computation time of 0.03 seconds. Different machine and deep learning algorithms were compared to see their suitability for use in digital substations and efficiently detect attacks with high accuracy. The complete results as well as the algorithms can be downloaded from our GitHub page [26]. This research is innovative in comprehensively comparing multiple machine learning algorithms for detecting cyber attacks in digital substations. Evaluating different algorithms provides insight into their strengths and weaknesses and identifies the most effective approach for detecting these attacks. Including deep learning algorithms, such as CNNs and RNNs, adds valuable insight

Authorized licensed use limited to: University of Glasgow. Downloaded on November 14,2025 at 11:31:47 UTC from IEEE Xplore. Restrictions apply.

TABLE III
ATTACK DETECTION RESULTS

Algorithm	Attack Type	Replay Attack		FDI Attack	
	Evaluation	Normal	Attack	Normal	Attack
RFC	Computation Time(s)	1.04		0.19	
	Precision	1.00	0.94	1.00	1.00
	Recall	0.54	1.00	1.00	1.00
	F1-Score	0.70	0.97	1.00	1.00
	Accuracy	0.94		1.00	
GMM	Computation Time(s)	0.11		0.05	
	Precision	0.32	0.00	1.00	1.00
	Recall	0.49	0.00	1.00	1.00
	F1-Score	0.39	0.00	1.00	1.00
	Accuracy	0.24		1.00	
SVM	Computation Time	14.33		0.03	
	Precision	1.00	0.94	1.00	1.00
	Recall	0.53	1.00	1.00	1.00
	F1-Score	0.69	0.97	1.00	1.00
	Accuracy	0.94		1.00	
NN	Computation Time	4.72		0.17	
	Precision	1.00	0.68	1.00	1.00
	Recall	0.52	1.00	1.00	1.00
	F1-Score	0.69	0.81	1.00	1.00
	Accuracy	0.76		1.00	
KNN	Computation Time	0.44		0.12	
	Precision	0.98	0.93	1.00	1.00
	Recall	0.52	1.00	1.00	1.00
	F1-Score	0.68	0.97	1.00	1.00
	Accuracy	0.94		1.00	
Autoencoder	Computation Time	91.75		27.93	
	Precision	0.98	0.95	1.00	1.00
	Recall	0.57	1.00	1.00	1.00
	F1-Score	0.72	0.97	1.00	1.00
	Accuracy	0.95		1.00	
Isolation Forest	Computation Time	1.94		0.39	
	Precision	0.47	0.19	0.45	0.00
	Recall	0.85	0.04	0.80	0.00
	F1-Score	0.60	0.06	0.58	0.00
	Accuracy	0.44		0.41	
One-Class SVM	Computation Time	46.24		0.95	
	Precision	0.48	0.38	1.00	0.91
	Recall	0.82	0.11	0.90	1.00
	F1-Score	0.60	0.17	0.95	0.95
	Accuracy	0.46		0.95	
Logistic Regression	Computation Time	0.18		0.07	
	Precision	1.00	0.94	1.00	1.00
	Recall	0.53	1.00	1.00	1.00
	F1-Score	0.69	0.97	1.00	1.00
	Accuracy	0.94		1.00	
CNN	Computation Time	9.72		2.90	
	Precision	1.00	0.94	1.00	1.00
	Recall	0.52	1.00	1.00	1.00
	F1-Score	0.69	0.97	1.00	1.00
	Accuracy	0.94		1.00	
Clustering	Computation Time	0.14		0.05	
	Precision	0.06	0.00	1.00	1.00
	Recall	0.48	0.00	1.00	1.00
	F1-Score	0.11	0.00	1.00	1.00
	Accuracy	0.06		1.00	
RNN	Computation Time	17.80		5.73	
	Precision	1.00	0.88	1.00	1.00
	Recall	0.00	1.00	1.00	1.00
	F1-Score	0.00	0.93	1.00	1.00
	Accuracy	0.88		1.00	
Gradient Boosting	Computation Time	0.86		0.15	
	Precision	1.00	0.94	1.00	1.00
	Recall	0.52	1.00	1.00	1.00
	F1-Score	0.69	0.97	1.00	1.00
	Accuracy	0.95		1.00	
DBN	Computation Time	7.40		1.98	
	Precision	1.00	0.88	1.00	0.61
	Recall	0.00	1.00	0.00	1.00
	F1-Score	0.00	0.94	0.00	0.76
	Accuracy	0.88		0.61	

to the field and helps identify the most effective approach for detecting cyber attacks in digital substations.

VI. CONCLUSIONS

The experiments have shown how Replay and FDI attacks can be conducted in a DS using a testbed with real devices. It was observed that the use of supervised machine learning algorithms enabled us to detect simulated replay and FDI attacks. The paper also showed a comparison of the results of the different machine learning algorithms used in the experiment with Logistic Regression delivering the best computation time for detecting replay attacks. The results also showed that FDI attacks can be detected with 100% accuracy using multiple algorithms with SVM ranked best considering computation time. These experiments are innovative for improving cyber-security in DS based on IEC-61850 for countries implementing DS as most of the developments are still in pilot stages. Future work will involve simulation and detection of other types of cyber attacks like Denial of Service (DoS), Smurf attack, and Message Suppression, to name a few. In addition, future experiments will be performed to implement real-time detection of cyber attacks.

REFERENCES

[1] Waleed, A., Virk, U., Riaz, M., Mehmood, S., Ahmad, S., Rameez, M. & Javed, A. Effectiveness and comparison of digital substations over conventional substations. *Advances In Science, Technology And Engineering Systems Journal*. **4**, 431-439 (2019)

[2] Khodabakhsh, A., Yayilgan, S., Houmb, S., Hurzuk, N., Foros, J. & Istad, M. Cyber-security gaps in a digital substation: From sensors to SCADA. *2020 9th Mediterranean Conference On Embedded Computing (MECO)*. pp. 1-4 (2020)

[3] Mackiewicz, R. Overview of IEC 61850 and Benefits. *2006 IEEE Power Engineering Society General Meeting*. pp. 8-pp (2006)

[4] Abraham, D., Yayilgan, S., Abomhara, M., Gebremedhin, A. & Dalipi, F. Security and Privacy Issues in IoT-Based Smart Grids: A Case Study in a Digital Substation. *Holistic Approach For Decision Making Towards Designing Smart Cities*. pp. 57-74 (2021)

[5] Kolosok, I. & Korkina, E. Problems of Cyber Security of Digital Substations. *VIth International Workshop'Critical Infrastructures: Contingency Management, Intelligent, Agent-Based, Cloud Computing And Cyber Security'(IWCI 2019)*. pp. 75-78 (2019)

[6] Palahalli, H., Hemmati, M. & Gruosso, G. Analysis of Cyber Security Threat of using IEC61850 in Digital Substations involving DERMS. *2022 International Symposium On Power Electronics, Electrical Drives, Automation And Motion (SPEEDAM)*. pp. 948-953 (2022)

[7] Rajkumar, V., Tealane, M., Ştefanov, A., Presekal, A. & Palensky, P. Cyber Attacks on Power System Automation and Protection and Impact Analysis. *2020 IEEE PES Innovative Smart Grid Technologies Europe (ISGT-Europe)*. pp. 247-254 (2020)

[8] Di Pietro, R., Raponi, S., Caprolu, M. & Cresci, S. Critical Infrastructure. *New Dimensions Of Information Warfare*. pp. 157-196 (2021)

[9] W. Wenye, and L. Zhuo, "Cyber security in the smart grid: Survey and challenges," in Computer networks, vol. 57, Elsevier, 2013, pp. 1344–1371.

[10] Komninos, N., Philippou, E. & Pitsillides, A. Survey in smart grid and smart home security: Issues, challenges and countermeasures. *IEEE Communications Surveys & Tutorials*. **16**, 1933-1954 (2014)

[11] Radoglou-Grammatikis, P. & Sarigiannidis, P. Securing the Smart Grid: A Comprehensive Compilation of Intrusion Detection and Prevention Systems. *IEEE Access*. **7** pp. 46595-46620 (2019)

[12] Quincozes, S., Albuquerque, C., Passos, D. & Mossé, D. A survey on intrusion detection and prevention systems in digital substations. *Computer Networks*. **184** pp. 107679 (2021)

[13] El Mrabet, Z., Ezzari, M., Elghazi, H. & El Majd, B. Deep learning-based intrusion detection system for advanced metering infrastructure. *Proceedings Of The 2nd International Conference On Networking, Information Systems & Security*. pp. 1-7 (2019)

[14] Ustun, T., Farooq, S. & Hussain, S. A Novel Approach for Mitigation of Replay and Masquerade Attacks in Smartgrids Using IEC 61850 Standard. *IEEE Access*. **7** pp. 156044-156053 (2019)

[15] Kreimel, P., Eigner, O., Mercaldo, F., Santone, A. & Tavolato, P. Anomaly detection in substation networks. *Journal Of Information Security And Applications*. **54** pp. 102527 (2020)

[16] Rashid, M., Kamruzzaman, J., Hassan, M., Imam, T. & Gordon, S. Cyberattacks detection in iot-based smart city applications using machine learning techniques. *International Journal Of Environmental Research And Public Health*. **17**, 9347 (2020)

[17] Yoo, H. & Shon, T. Novel approach for detecting network anomalies for substation automation based on IEC 61850. *Multimedia Tools And Applications*. **74** pp. 303-318 (2015)

[18] Sanchez-Acevedo, S. & D'Arco, S. Towards a Versatile Cyber Physical Power System Testbed: Design and Operation Experience. *2021 IEEE PES Innovative Smart Grid Technologies Europe (ISGT Europe)*. pp. 1-6 (2021)

Authorized licensed use limited to: University of Glasgow. Downloaded on November 14,2025 at 11:31:47 UTC from IEEE Xplore. Restrictions apply.

[19] Onoda, T. & Kiuchi, M. Analysis of intrusion detection in control system communication based on outlier detection with one-class classifiers. *International Conference On Neural Information Processing*. pp. 275-282 (2012)
[20] Yoo, H. & Shon, T. Novel approach for detecting network anomalies for substation automation based on IEC 61850. *Multimedia Tools And Applications*. **74**, 303-318 (2015)
[21] Wireshark, "About Wireshark," 2022. https://www.wireshark.org/
[22] Tshark, "tshark Manual Page," 2022. https://www.wireshark.org/docs/man-pages/tshark.html
[23] Liu, Y., Wang, Y. & Zhang, J. New machine learning algorithm: Random forest. *International Conference On Information Computing And Applications*. pp. 246-252 (2012)
[24] El Naqa, I. & Murphy, M. What is machine learning?. *Machine Learning In Radiation Oncology*. pp. 3-11 (2015)
[25] P. Biondi, "Scapy," 2022. https://scapy.net/
[26] D. Abraham, "DSAttackDetection," 2022. GitHub. https://github.com/DoneyAbraham/DSAttackDetection
[27] Queiroz, A., Keegan, B. & Mtenzi, F. Predicting software vulnerability using security discussion in social media. *European Conference On Cyber Warfare And Security*. pp. 628-634 (2017)
[28] Ham, J., Yoo, H., Kim, J. & Lee, B. Vowel speech recognition from rat electroencephalography using long short-term memory neural network. *Plos One*. **17**, e0270405 (2022)
[29] Alam, M. Isolation Forest: A tree-based algorithm for Anomaly Detection. *Medium*. (2020,10), https://towardsdatascience.com/isolation-forest-a-tree-based-algorithm-for-anomaly-detection-4a1669f9b782
[30] Sokolova, M., Japkowicz, N. & Szpakowicz, S. Beyond accuracy, F-score and ROC: a family of discriminant measures for performance evaluation. *19th Australian Joint Conference On Artificial Intelligence, Hobart, Australia, 2006. Proceedings 19*. pp. 1015-1021 (2006)

Authorized licensed use limited to: University of Glasgow. Downloaded on November 14,2025 at 11:31:47 UTC from IEEE Xplore. Restrictions apply.