THIRD ANGLE PROJECTION | ALL DIMENSIONS ARE IN MM | SCALE : NTS | DOC NO : F 201/E

FINISHING PROCESS		SPECIFICATION : 1	OLD M NUMBER :	CATEGORY : D	MODULE : PV 03
PROCESS	NOS			SPECIAL INSTRUCTIONS	
HEADER SAWING				**NOTE:-**	
CUTTING					
GRINDING					
STEP GRINDING					
END GRINDING					
POLISHING					
DRILLING					

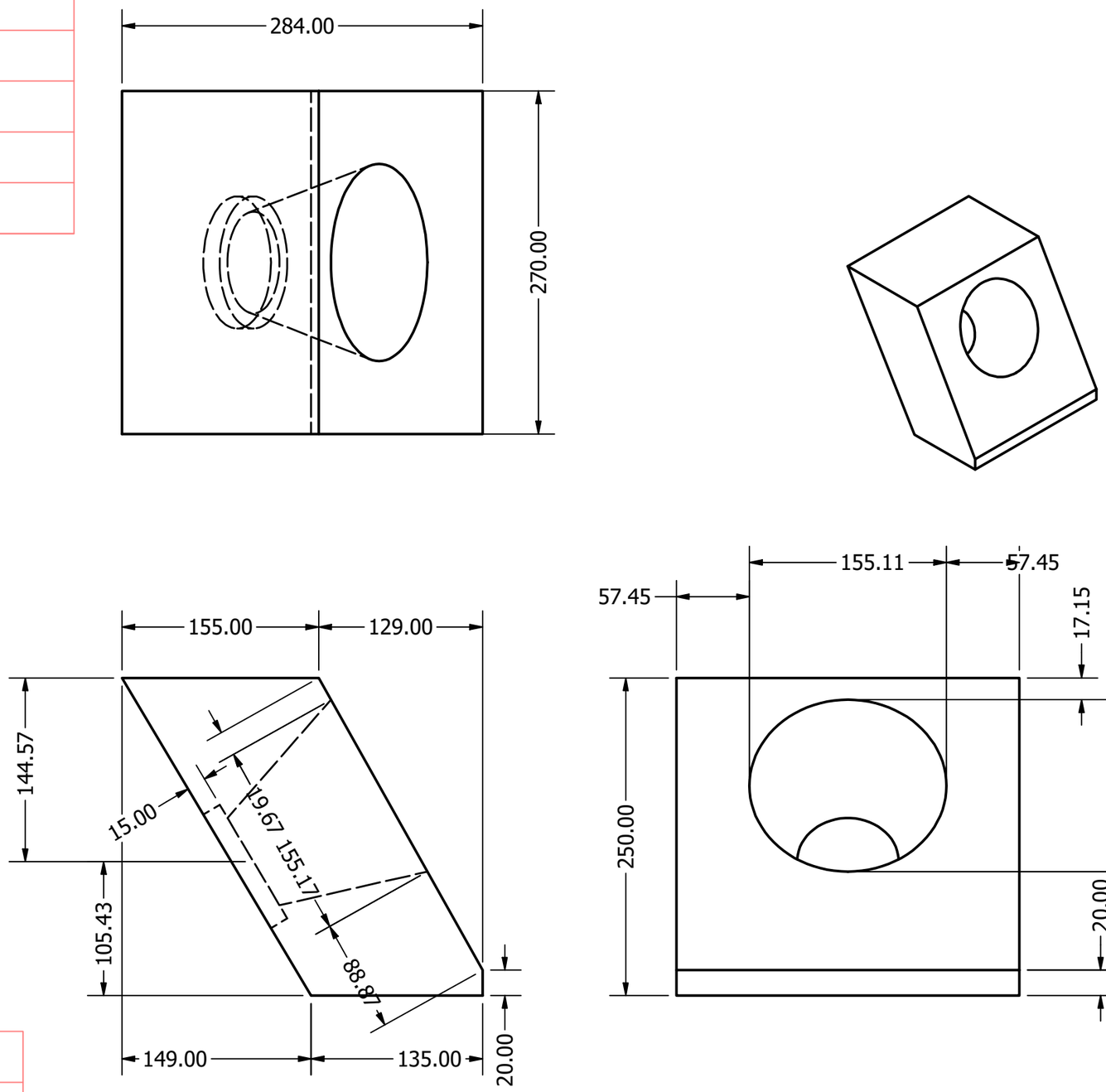

CHILLING DETAILS

GATE

TITLE : BURNER BLOCK

HDR .SIZE

ASSEMBLY DRG NO :	1											
ITEM NO :	2134											
AWRRVFV	PA0333-22	1681 RN	9		1	1	100	30.4885	8711	1	1	1
CUSTOMER NAME	OA NO / ITEM	QLY /TYPE	ORD	MADE	PAT	Pc/Md	POUR	NOM	VOLUME (CC)	DRN	CHD	APPD
			QUANTITY (NOS)			WEIGHT (KG)						

_EX

PLANT SEPR : PALAKKAD