THIRD ANGLE PROJECTION | ALL DIMENSSIONS ARE IN MM | SCALE : NTS | DOC NO : F 201/D

FINISHING PROESS	
PROCESS	0
HEADER SAWING	0
CUTTING	0
GRINDING	3
STEP GRINDING	1
END GRINDING	0
POLISHING	2
DRILLING	0

SPECIFICATION : SEFPRO | OLD M NUMBER : | CATEGORY : D | MODULE : TS 01

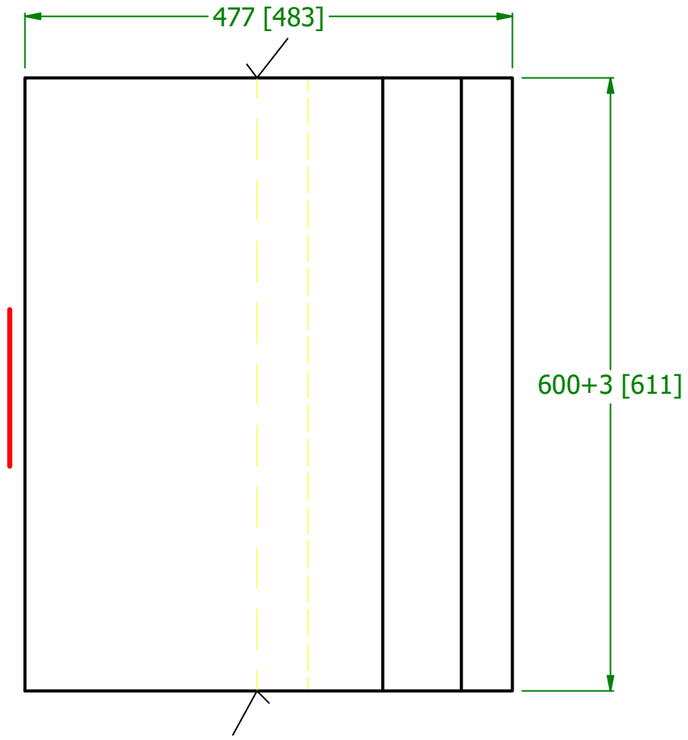

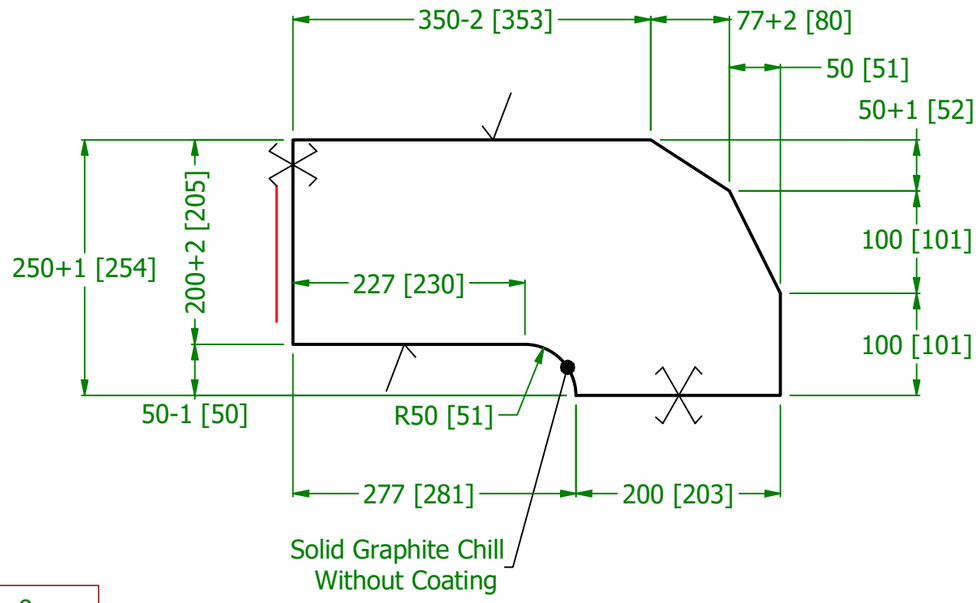

SPECIAL INSTRUCTION

FLASKING :-

1) External Major Sides Metallic Chill

2) Mould/Bin = 1

FURNACE :-

1) Plugging Required

Internal Major side Metallic chill

CHILLING DETAILS

TITLE TUCKSTONE

ø150

GATE

M#5 Sand Header

HRD.SIZE

ASSEMBLY DRG NO :	2022rev.0
ITEM NO:	2301

CUSTOMER_PA7253	PA7253-21	1681 RN	60	45		1	1	244	208	59407	CHANDRU	CHANDRU	CHANDRU
			ORD	MADE	EX	PAT	Pc/Md	POUR	NOM				
CUSTOMER NAME	OA NO / ITEM	QLY/ TYPE	QUANTITY (NOS)					WEIGHT (KG)		VOLUME (CC)	DRN	CHD	APPD

72009

PLANT SEPR-PALAKAD