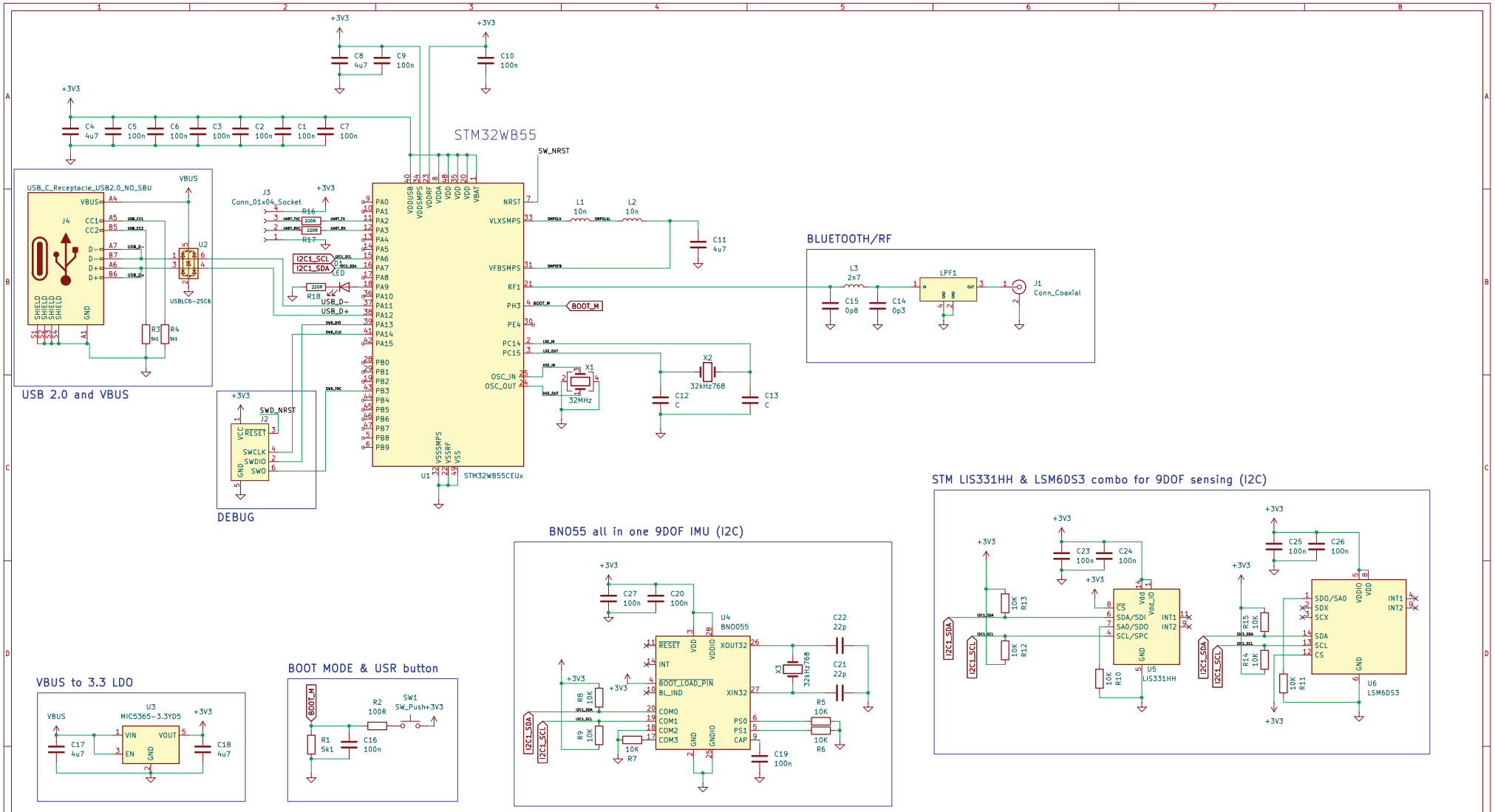

i do not know what i am doing

Sheet: /
File: STM32-PCb.kicad_sch

Title: STM32 BL and 9DOF test board

Size: A3	Date: 2025-07-13	Rev: 1
KiCad E.D.A. 9.0.0		Id: 1/1