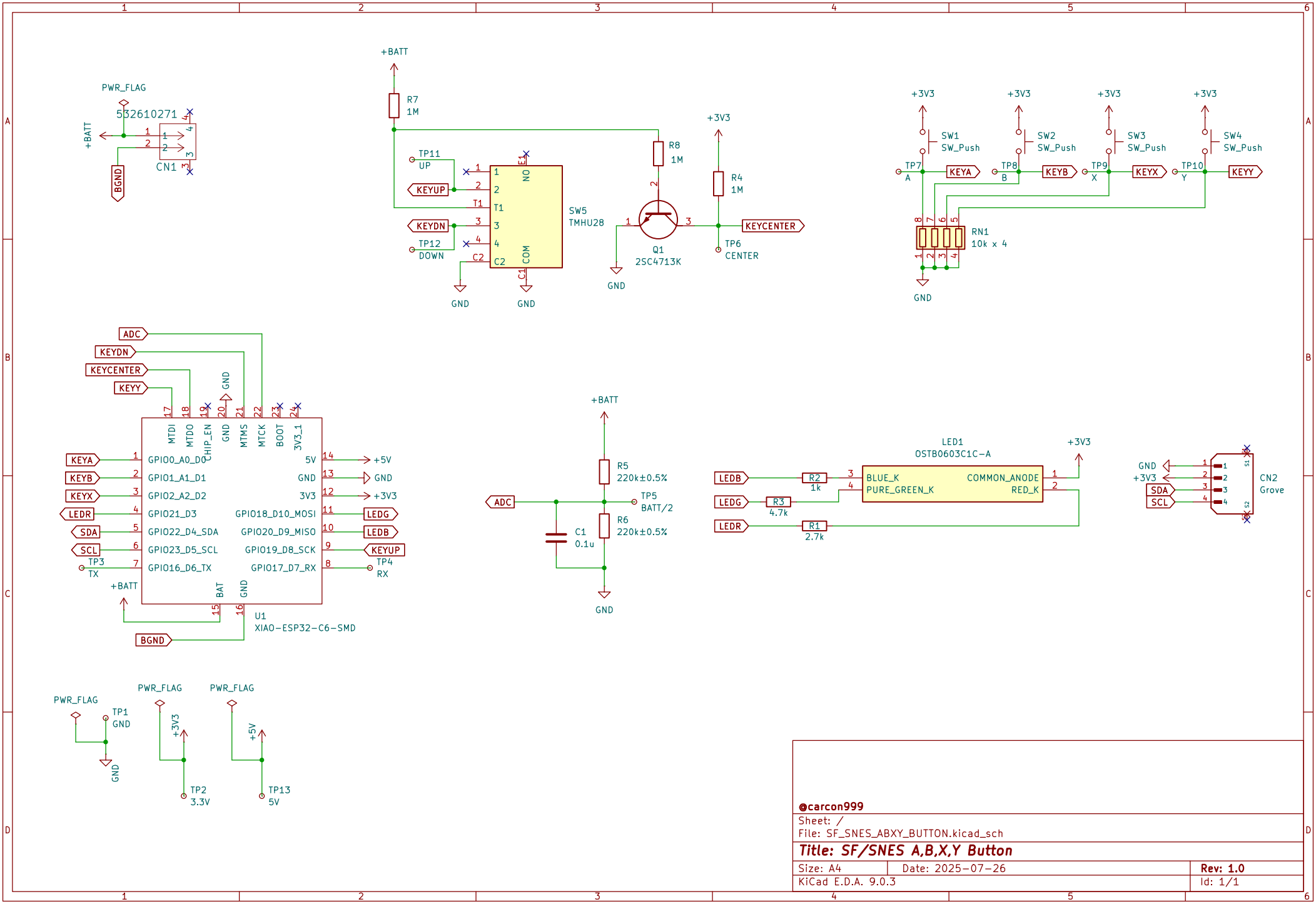

@carcon999

Sheet: /

File: SF_SNES_ABXY_BUTTON.kicad_sch

Title: SF/SNES A,B,X,Y Button

Size: A4	Date: 2025-07-26	Rev: 1.0
KiCad E.D.A. 9.0.3		Id: 1/1