Power

- Battery is 2S Lipo (7.4V nominal, 6.8 to 8.4V)
- 5V is generated by ESC module (from battery)
- 3V3 is generated by LoLin module (from 5V)
- VTX is powered from battery directly

Test points and fixations

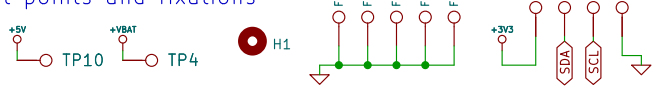

Infrared Receiver

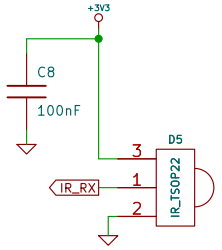

VTX

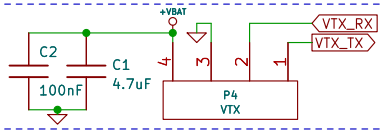

Motor Control (ESC)

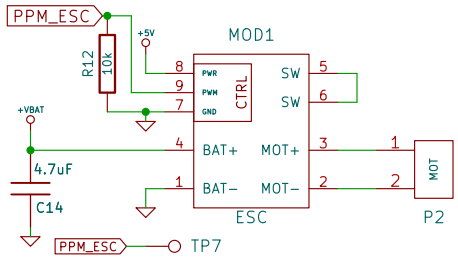

Battery

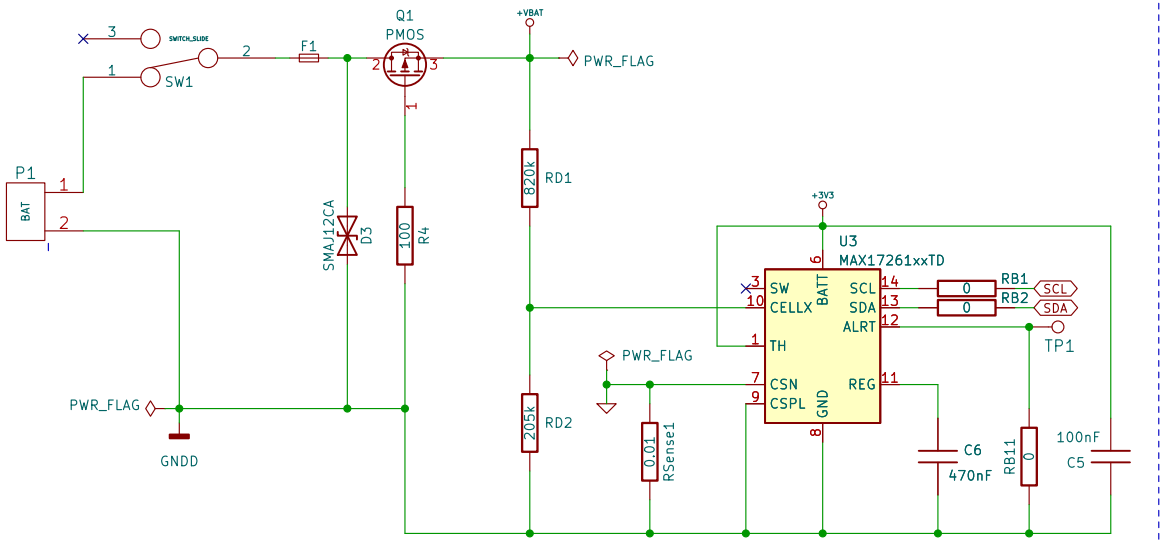

IMU

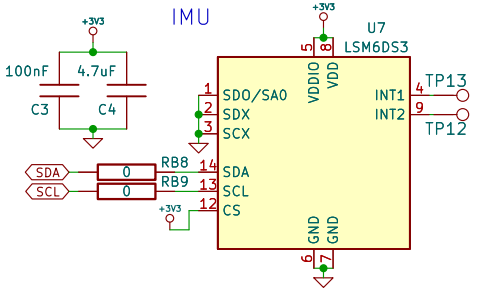

Rear lights

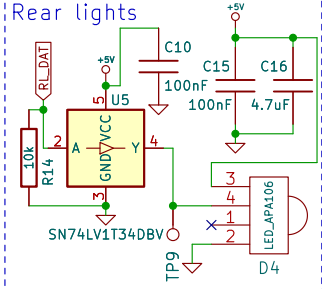

MCU

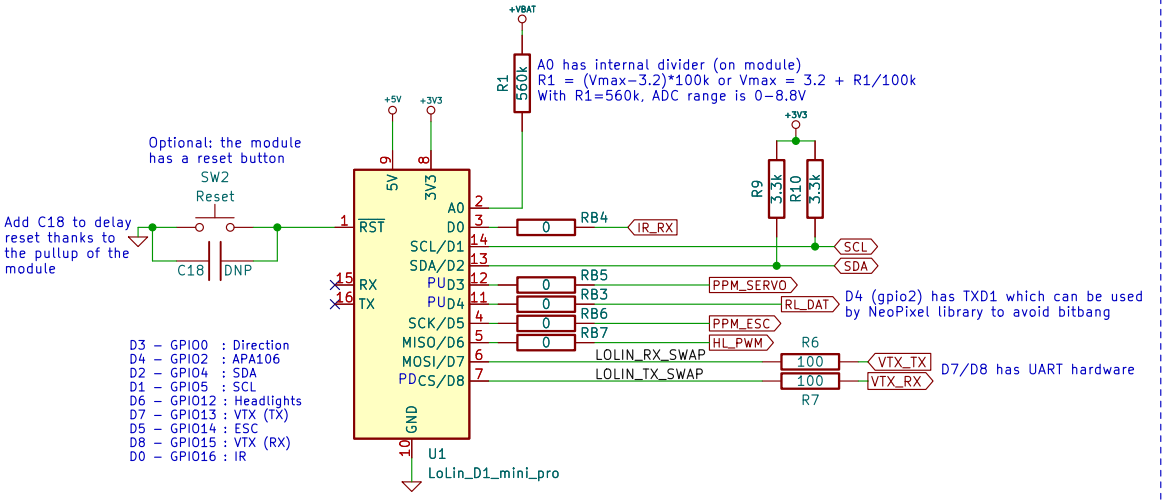

Servo

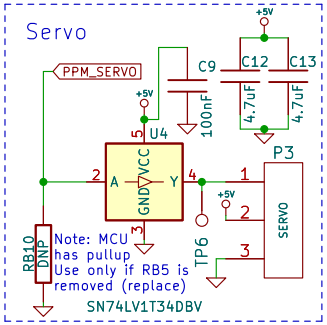

Headlights

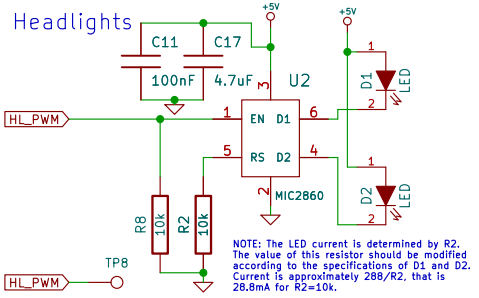

OpusLabs

Sheet: /

File: carinsitu.kicad_sch

Title: Carinsitu

Size: A4	Date: 2019−06−18	**Rev: 1**
KiCad E.D.A. kicad (6.0.11)		Id: 1/1

References	Value	Distrib Ref	Distributor	Manuf Ref	Manufacturer	Quantity
C2, C3, C5, C8, C9, C10, C11, C15	100nF	2581045	Farnell	C0603C104M4RACTU	Kemet	8
C1, C4, C12, C13, C14, C16, C17	4.7uF	2533952	Farnell	885012107013	Würth elektronik	7
C6	470nF	2812270	Farnell	885012106015	Würth elektronik	1
C18	DNP	-	-	-	-	1
R2, R8, R12, R14	10k	2073612	Farnell	MCMR08X103JTL	Multicomp pro	4
R4, R6, R7	100	2447552	Farnell	MCWR08X1000FTL	Multicomp pro	3
R9, R10	3.3k	2073746	Farnell	MCMR08X332JTL	Multicomp pro	2
R1	560k	2447685	Farnell	MCWR08X5603FTL	Multicomp pro	1
RD1	820k	2447725	Farnell	MCWR08X8203FTL	Multicomp pro	1
RD2	205k	2074399	Farnell	MCSR08X2053FTL	Multicomp pro	1
RSense1	0.01	2695180	Farnell	MCWW20W0R01FTL	Multicomp pro	1
RB10	DNP	-	-	-	-	1
D1, D2	LED	1716702	Farnell	OVL-5521	Multicomp pro	2
D3	SMAJ12CA	2675283	Farnell	SMAJ12CA+	Multicomp pro	1
D4	LED_APA106					1
D5	IR_TSOP22	4913073	Farnell	TSOP2238	Vishay	1
U4, U5	SN74LV1T34DBV	218-4596	RS	SN74LV1T34DBVR	Texas instruments	2
U1	LoLin_D1_mini_pro			Lolin D1 mini pro	Lolin	1
U2	MIC2860	2509995	Farnell	MIC2860-2PYD6	Microchip	1
U3	MAX17261xxTD	2899544	Farnell	MAX17261METD+	Analog devices	1
U7	LSM6DS3	2664522	Farnell	LSM6DSMTR	ST	1
F1	Fuse	1345950	Farnell	RGEF600	LittelFuse	1
SW1	SWITCH_SLIDE	2931770	Farnell	L102011ML04Q	C&K Components	1
SW2	Reset	3261823	Farnell	SKRKAHE020	Alps Alpine	1
RB1, RB2, RB3, RB4, RB5, RB6, RB7, RB8, RB9, RB11	0	2447743	Farnell	MCWR06X000PTL	Multicomp pro	10
MOD1	ESC					1
Q1	PMOS	3518391	Farnell	DMPH6050SK3-13	Diodes inc.	1
P1	BAT	2356176	Farnell	61300211021	Würth elektronik	1
P2	MOT	1516289	Farnell	S2B-XH-A	JST	1
P3	SERVO	3049557	Farnell	22-28-8030	Molex	1
P4	VTX	-	-	-	-	1

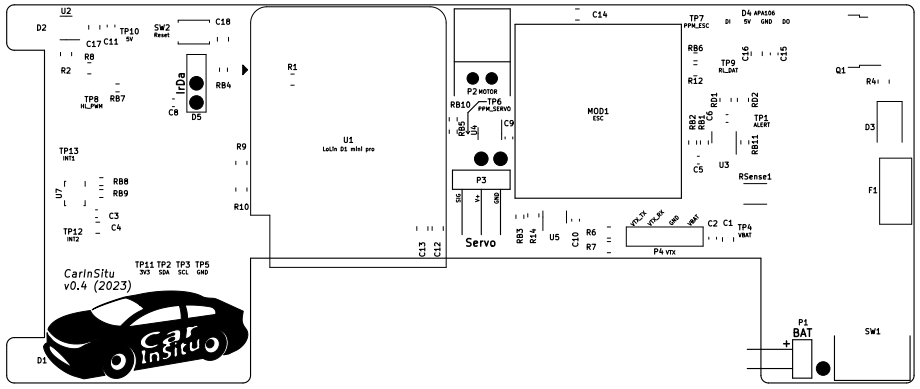
U2
D2
TP10
5V
SW2
Reset
C18
C17
C11
R8
R2
TP8
HL_PWM
RB7
IrDa
C8
D5
RB4
R1
U1
LoLin D1 mini pro
R9
R10
TP13
INT1
U7
RB8
RB9
C3
C4
TP12
INT2
TP11
3V3
TP2
SDA
TP3
SCL
TP5
GND
CarInSitu
v0.4 (2023)
D1
P2 MOTOR
RB10
TP6
PPM_SERVO
RB5
C9
P3
SIG
Vcc
GND
Servo
C13
C12
C14
MOD1
ESC
RB3
R14
U5
C10
R6
R7
TP7
PPM_ESC
D4 APA106
DI
5V
GND
DO
RB6
RI2
TP9
RL_BAT
C16
C15
RD1
RD2
RB2
RB1
C6
TP1
ALERT
RB11
C5
U3
RSense1
TP4
VBAT
C2
C1
TXD_5V
RXD_5V
GND
VBAT
P4 VTX
Q1
R4
D3
F1
P1
BAT
SW1

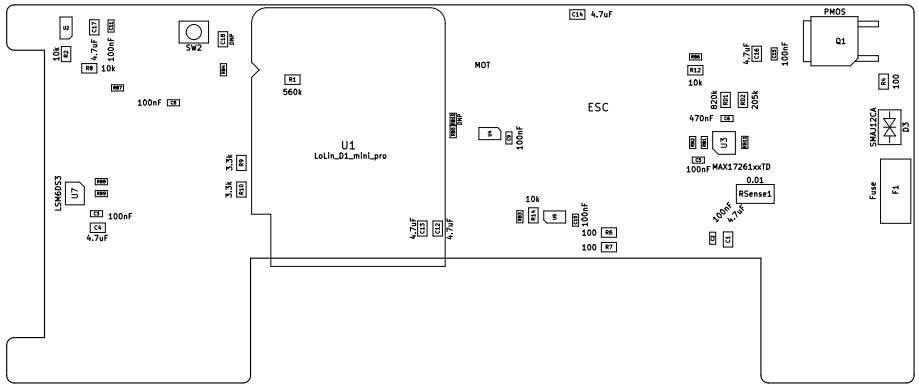
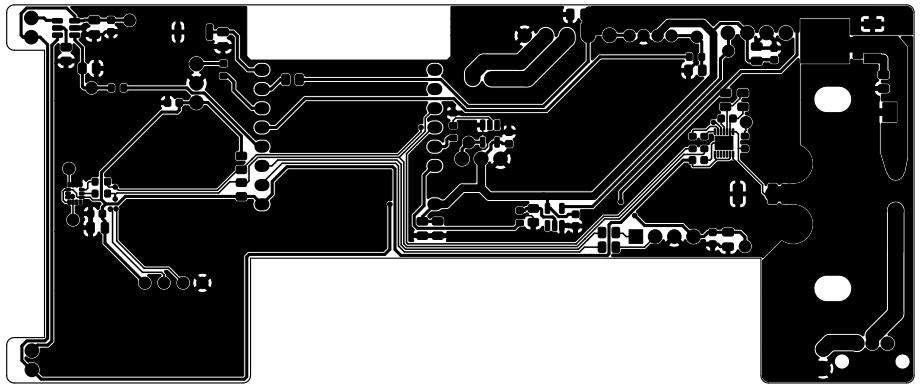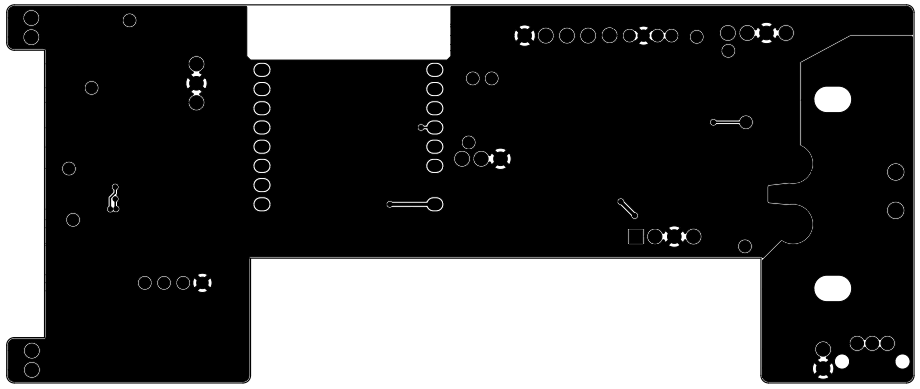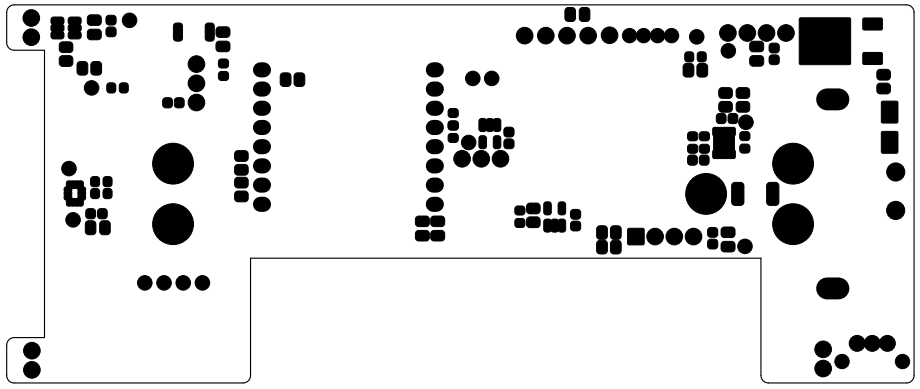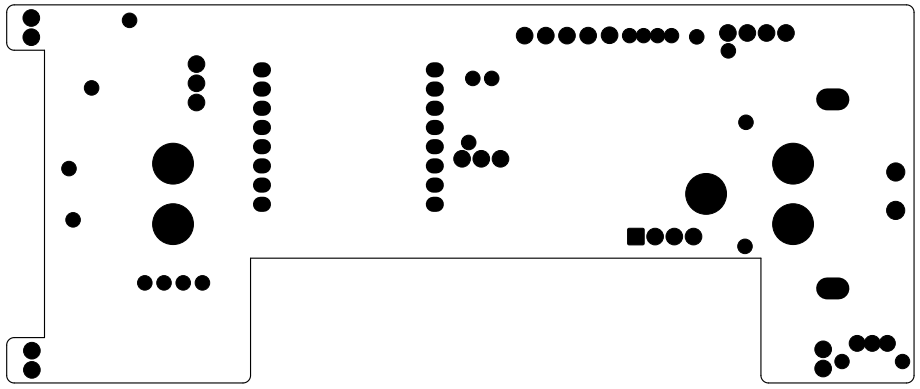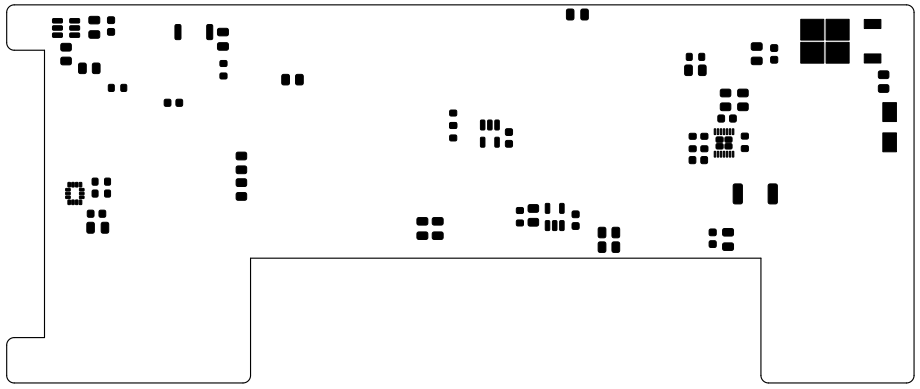
PMOS
Q1
C14 4.7uF
MOT
ESC
R1
560k
U1
LoLin_D1_mini_pro
SW2
C18 DNP
R2 10k
C17 4.7uF
C11 100nF
R8 10k
R7
100nF C8
LSM6DS3
U7
C3 100nF
C4 4.7uF
R9 3.3k
R10 3.3k
C13 4.7uF
C12 4.7uF
C9 100nF
R12 10k
R11 820k
R10 205k
C6 470nF
U3
C5 100nF
MAX17261xxTD
0.01
RSense1
R4 100
SMAJ12CA
D3
Fuse
F1
R14 10k
C10 100nF
R6 100
R7 100
C2 100nF
C1 4.7uF