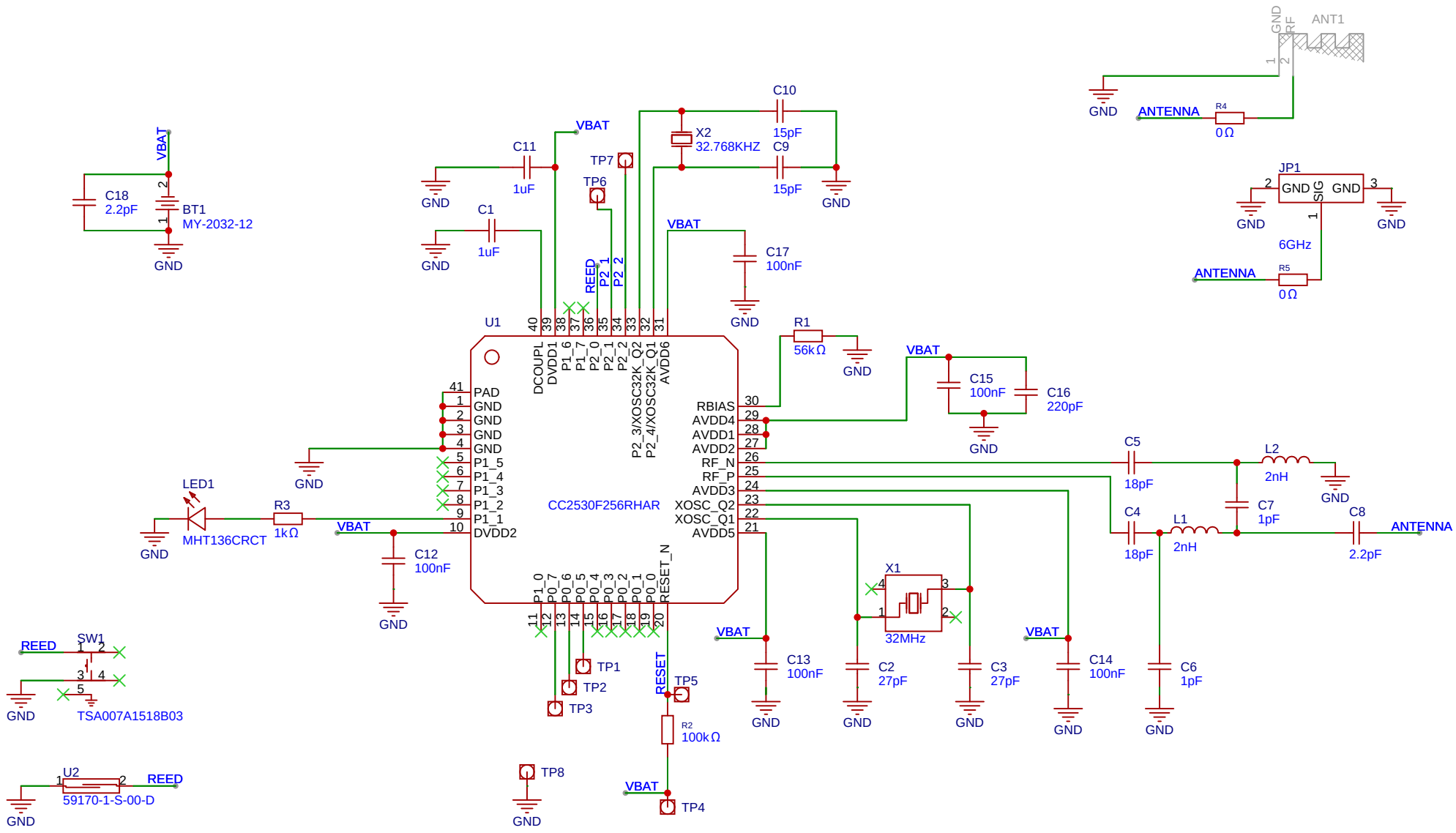

carletz	Zigbee end device		Create at	2025-10-02	Drawn	carletz
			Update at	2025-10-09	Reviewed	carletz
			Schematic	End Device (contact)		
	Version	Size	Page 1 Total 1			
	1	A4	EasyEDA	Board	Zigbee End Device	Page	Schematic