SOLUTIONS MANUAL

for

An Introduction to The Finite Element Method

(Third Edition)

by

J. N. REDDY

Department of Mechanical Engineering
Texas A & M University
College Station, Texas 77843-3123

PROPRIETARY AND CONFIDENTIAL

This Manual is the proprietary property of The McGraw-Hill Companies, Inc. ("McGraw-Hill") and protected by copyright and other state and federal laws. By opening and using this Manual the user agrees to the following restrictions, and if the recipient does not agree to these restrictions, the Manual should be promptly returned unopened to McGraw-Hill: **This Manual is being provided only to authorized professors and instructors for use in preparing for the classes using the affiliated textbook. No other use or distribution of this Manual is permitted. This Manual may not be sold and may not be distributed to or used by any student or other third party. No part of this Manual may be reproduced, displayed or distributed in any form or by any means, electronic or otherwise, without the prior written permission of the McGraw-Hill.**

McGraw-Hill, New York, 2005

PREFACE

This solution manual is prepared to aid the instructor in discussing the solutions to assigned problems in Chapters 1 through 14 from the book, *An Introduction to the Finite Element Method,* Third Edition, McGraw–Hill, New York, 2006. Computer solutions to certain problems of Chapter 8 (see Chapter 13 problems) are also included at the end of Chapter 8.

The instructor should make an effort to review the problems before assigning them. This allows the instructor to make comments and suggestions on the approach to be taken and nature of the answers expected. The instructor may wish to generate additional problems from those given in this book, especially when taught time and again from the same book. Suggestions for new problems are also included at pertinent places in this manual. Additional examples and problems can be found in the following books of the author:

1. J. N. Reddy and M. L. Rasmussen, *Advanced Engineering Analysis,* John Wiley, New York, 1982; reprinted and marketed currently by Krieger Publishing Company, Melbourne, Florida, 1990 (see Section 3.6).
2. J. N. Reddy, *Energy and Variational Methods in Applied Mechanics,* John Wiley, New York, 1984 (see Chapters 2 and 3).
3. J. N. Reddy, *Applied Functional Analysis and Variational Methods in Engineering,* McGraw-Hill, New York, 1986; reprinted and marketed currently by Krieger Publishing Company, Melbourne, Florida, 1991 (see Chapters 4, 6 and 7).
4. J. N. Reddy, *Theory and Analysis of Elastic Plates,* Taylor and Francis, Philadelphia, 1997.
5. J. N. Reddy, *Energy Principles and Variational Methods in Applied Mechanics,* Second Edition, John Wiley, New York, 2002 (see Chapters 4 through 7 and Chapter 10).
6. J. N. Reddy, *Mechanics of Laminated Composite Plates and Shells: Theory and Analysis*, CRC Press, Second Edition, Boca Raton, FL, 2004.
7. J. N. Reddy, *An Introduction to Nonlinear Finite Element Analysis*, Oxford University Press, Oxford, UK, 2004.

The computer problems **FEM1D** and **FEM2D** can be readily modified to solve new types of field problems. The programs can be easily extended to finite element models formulated in an advanced course and/or in research. The Fortran sources of **FEM1D** and **FEM2D** are available from the author for a price of $200.

The author appreciates receiving comments on the book and a list of errors found in the book and this solutions manual.

J. N. Reddy

All that is not given is lost.

PROPRIETARY MATERIAL. ©The McGraw-Hill Companies, Inc. All rights reserved.

Chapter 1

INTRODUCTION

Problem 1.1: Newton's second law can be expressed as

$$\mathbf{F} = m\mathbf{a} \tag{1}$$

where $\mathbf{F}$ is the net force acting on the body, m mass of the body, and $\mathbf{a}$ the acceleration of the body in the direction of the net force. Use Eq. (1) to determine the mathematical model, i.e., governing equation of a free-falling body. Consider only the forces due to gravity and the air resistance. Assume that the air resistance is linearly proportional to the velocity of the falling body.

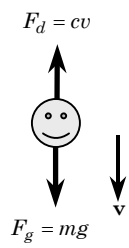

Solution: From the free-body-diagram it follows that

$$m\frac{dv}{dt} = F_g - F_d, \quad F_g = mg, \quad F_d = cv$$

where v is the downward velocity (m/s) of the body, F_g is the downward force (N or kg m/s^2) due to gravity, F_d is the upward drag force, m is the mass (kg) of the body, g the acceleration (m/s^2) due to gravity, and c is the proportionality constant (drag coefficient, kg/s). The equation of motion is

$$\frac{dv}{dt} + \alpha v = g, \quad \alpha = \frac{c}{m}$$

PROPRIETARY MATERIAL. ©The McGraw-Hill Companies, Inc. All rights reserved.

Problem 1.2: A cylindrical storage tank of diameter D contains a liquid at depth (or head) $h(x,t)$. Liquid is supplied to the tank at a rate of q_i (m^3/day) and drained at a rate of q_0 (m^3/day). Use the principle of conservation of mass to arrive at the governing equation of the flow problem.

Solution: The conservation of mass requires

$$\text{time rate of change in mass} = \text{mass inflow - mass outflow}$$

The above equation for the problem at hand becomes

$$\frac{d}{dt}(\rho A h) = \rho q_i - \rho q_0 \quad \text{or} \quad \frac{d(Ah)}{dt} = q_i - q_0$$

where A is the area of cross section of the tank ($A = \pi D^2/4$) and ρ is the mass density of the liquid.

Problem 1.3: Consider the simple pendulum of Example 1.3.1. Write a computer program to numerically solve the nonlinear equation (1.2.3) using the Euler method. Tabulate the numerical results for two different time steps $\Delta t = 0.05$ and $\Delta t = 0.025$ along with the exact linear solution.

Solution: In order to use the finite difference scheme of Eq. (1.3.3), we rewrite (1.2.3) as a pair of first-order equations

$$\frac{d\theta}{dt} = v, \quad \frac{dv}{dt} = -\lambda^2 \sin\theta$$

Applying the scheme of Eq. (1.3.3) to the two equations at hand, we obtain

$$\theta_{i+1} = \theta_i + \Delta t\ v_i; \quad v_{i+1} = v_i - \Delta t\ \lambda^2 \sin\theta_i$$

The above equations can be programmed to solve for (θ_i, v_i). Table P1.3 contains representative numerical results.

Problem 1.4: An improvement of Euler's method is provided by Heun's method, which uses the average of the derivatives at the two ends of the interval to estimate the slope. Applied to the equation

$$\frac{du}{dt} = f(t,u) \tag{1}$$

Heun's scheme has the form

$$u_{i+1} = u_i + \frac{\Delta t}{2}\left[f(t_i,u_i) + f(t_{i+1},u_{i+1}^0)\right], \quad u_{i+1}^0 = u_i + \Delta t\ f(t_i,u_i) \tag{2}$$

PROPRIETARY MATERIAL. ©The McGraw-Hill Companies, Inc. All rights reserved.

Table P1.3: Comparison of various approximate solutions of the equation $(d^2\theta/dt^2) + \lambda^2 \sin\theta = 0$ with its exact linear solution.

	Exact	Approx. solution θ		Exact	Approx. solution v	
t	θ	$\Delta t = .05$	$\Delta t = .025$	v	$\Delta t = .05$	$\Delta t = .025$
0.00	0.78540	0.78540	0.78540	-0.00000	-0.00000	-0.00000
0.05	0.76965	0.78540	0.77828	-0.62801	-0.56922	-0.56922
0.10	0.72302	0.75694	0.74276	-1.23083	-1.13844	-1.13027
0.15	0.64739	0.70002	0.67944	-1.78428	-1.69123	-1.66622
0.20	0.54578	0.58980	0.56482	-2.26615	-2.20984	-2.15879
0.25	0.42229	0.50496	0.47627	-2.65711	-2.67459	-2.58816
0.30	0.28185	0.37123	0.34225	-2.94148	-3.06403	-2.93371
0.35	0.13011	0.21803	0.19218	-3.10785	-3.35605	-3.17573
0.40	-0.02685	0.05023	0.03148	-3.14955	-3.53018	-3.29791
0.45	-0.18274	-0.12628	-0.13374	-3.06491	-3.57060	-3.29007
0.50	-0.33129	-0.30481	-0.29690	-2.85732	-3.46921	-3.15014
0.60	-0.58310	-0.63965	-0.59131	-2.11119	-2.85712	-2.50787
0.80	-0.78356	-1.05068	-0.91171	0.21536	-0.50399	-0.28356
1.00	-0.50591	-0.94062	-0.74672	2.41051	2.29398	2.19765

In books on numerical analysis, the second equation in (2) is called the *predictor* equation and the first equation is called the *corrector* equation. Apply Heun's method to Eqs. (1.3.4) and obtain the numerical solution for $\Delta t = 0.05$.

Solution: Heun's method applied to the pair

$$\frac{d\theta}{dt} = v, \quad \frac{dv}{dt} = -\lambda^2 \sin\theta$$

yields the following discrete equations:

$$\begin{aligned}
\theta_{i+1}^0 &= \theta_i + \Delta t\ v_i \\
v_{i+1} &= v_i - \lambda^2 \frac{\Delta t}{2}\left(\sin\theta_i + \sin\theta_{i+1}^0\right) \\
\theta_{i+1} &= \theta_i + \frac{\Delta t}{2}\left(v_i + v_{i+1}\right)
\end{aligned}$$

The numereical results obtained with the Heun's method and Euler's method are presented in Table P1.4.

PROPRIETARY MATERIAL. © The McGraw-Hill Companies, Inc. All rights reserved.

Table P1.4: Numerical solutions of the nonlinear equation $d^2\theta/dt^2 + \lambda^2 \sin\theta = 0$ along with the exact solution of the linear equation $d^2\theta/dt^2 + \lambda^2\theta = 0$.

	Exact	Approx. solution θ		Exact	Approx. solution v	
t	θ	Euler's	Heun's	v	Euler's	Heun's
0.00	0.785398	0.785398	0.785398	-0.000000	-0.000000	-0.000000
0.05	0.769645	0.785398	0.771168	-0.628013	-0.569221	-0.569221
0.10	0.723017	0.756937	0.728680	-1.230833	-1.138442	-1.121957
0.20	0.545784	0.615453	0.564818	-2.266146	-2.209838	-1.121957
0.40	-0.026852	0.050228	0.015246	-3.149552	-3.530178	-3.073095
0.60	-0.583104	-0.639652	-0.544352	-2.111190	-2.857121	-2.194398
0.80	-0.783562	-1.050679	-0.787095	0.215362	-0.503993	-0.114453
1.00	-0.505912	-0.940622	-0.587339	2.410506	2.293983	2.023807

PROPRIETARY AND CONFIDENTIAL

This Manual is the proprietary property of The McGraw-Hill Companies, Inc. ("McGraw-Hill") and protected by copyright and other state and federal laws. By opening and using this Manual the user agrees to the following restrictions, and if the recipient does not agree to these restrictions, the Manual should be promptly returned unopened to McGraw-Hill: **This Manual is being provided only to authorized professors and instructors for use in preparing for the classes using the affiliated textbook. No other use or distribution of this Manual is permitted. This Manual may not be sold and may not be distributed to or used by any student or other third party. No part of this Manual may be reproduced, displayed or distributed in any form or by any means, electronic or otherwise, without the prior written permission of the McGraw-Hill.**

Chapter 2

MATHEMATICAL PRELIMINARIES, INTEGRAL FORMULATIONS, AND VARIATIONAL METHODS

In Problem 2.1–2.5, construct the weak form and, whenever possible, quadratic functionals.

Problem 2.1: A nonlinear equation:

$$-\frac{d}{dx}\left(u\frac{du}{dx}\right)+f=0 \quad \text{for} \quad 0<x<L$$

$$\left(u\frac{du}{dx}\right)\bigg|_{x=0}=0 \quad u(1)=\sqrt{2}$$

Solution: Following the three-step procedure, we write the weak form:

$$0=\int_0^1 v\left[-\frac{d}{dx}(u\frac{du}{dx})+f\right]\,dx \tag{1}$$

$$=\int_0^1\left[u\frac{dv}{dx}\frac{du}{dx}+vf\right]\,dx-\left[v(u\frac{du}{dx})\right]_0^1 \tag{2}$$

Using the boundary conditions, $v(1)=0$ (because u is specified at $x=1$) and $(du/dx)=0$ at $x=0$, we obtain

$$0=\int_0^1\left[u\frac{dv}{dx}\frac{du}{dx}+vf\right]dx \tag{3}$$

For this problem, the weak form does not contain an expression that is linear in both u and v; the expression is linear in v but not linear in u. Therefore, a quadratic functional does not exist for this case. The expressions for $B(\cdot,\cdot)$ and $\ell(\cdot)$ are given by

$$B(v,u)=\int_0^1 u\frac{dv}{dx}\frac{du}{dx}dx \quad \text{(not linear in } u \text{ and not symmetric in } u \text{ and } v\text{)}$$

$$\ell(v)=-\int_0^1 vf\,dx \tag{4}$$

PROPRIETARY MATERIAL. ©The McGraw-Hill Companies, Inc. All rights reserved.

♠ New Problem 2.1:

The instructor may assign the following problem:

$$-\frac{d}{dx}\left[(1+2x^2)\frac{du}{dx}\right]+u=x^2 \tag{1a}$$

$$u(0)=1\ ,\quad \left(\frac{du}{dx}\right)_{x=1}=2 \tag{1b}$$

The answer is

$$\begin{aligned} B(v,u) &= \int_0^1 \left[(1+2x^2)\frac{dv}{dx}\frac{du}{dx}+vu\right]dx \text{ (symmetric)} \\ \ell(v) &= \int_0^1 v\ x^2\ dx + 6v(1) \\ I(u) &= \frac{1}{2}B(u,u)-\ell(u) = \frac{1}{2}\int_0^1 \left[(1+2x^2)\left(\frac{du}{dx}\right)^2+u^2\right]dx \\ &\qquad -\int_0^1 u\ x^2\ dx - 6u(1) \end{aligned} \tag{2}$$

Problem 2.2: The Euler-Bernoulli-von Kármán nonlinear beam theory [7]:

$$-\frac{d}{dx}\left\{EA\left[\frac{du}{dx}+\frac{1}{2}\left(\frac{dw}{dx}\right)^2\right]\right\}=f \quad \text{for} \quad 0<x<L$$

$$\frac{d^2}{dx^2}\left(EI\frac{d^2w}{dx^2}\right)-\frac{d}{dx}\left\{EA\frac{dw}{dx}\left[\frac{du}{dx}+\frac{1}{2}\left(\frac{dw}{dx}\right)^2\right]\right\}=q$$

$$u=w=0 \quad \text{at} \quad x=0,\ L; \quad \left(\frac{dw}{dx}\right)\Big|_{x=0}=0; \quad \left(EI\frac{d^2w}{dx^2}\right)\Big|_{x=L}=M_0$$

where EA, EI, f, and q are functions of x, and M_0 is a constant. Here u denotes the axial displacement and w the transverse deflection of the beam.

Solution: The first step of the formulation is to multiply each equation with a weight function, say v_1 for the first equation and v_2 for the second equation, and integrate over the interval $(0,L)$. In the second step, carry out the integration-by-parts once in the first equation, twice in the first term of the second equation, and once in the second part of the second equation. Then use the fact that $v_1(0)=v_1(L)=0$ (because u is specified there), $v_2(0)=v_2(L)=0$ (because w is specified), and $(dv_2/dx)(0)=0$

PROPRIETARY MATERIAL. ©The McGraw-Hill Companies, Inc. All rights reserved.

(because dw/dx is specified at $x = 0$). In addition, we have $EI(d^2w/dx^2) = M_0$ at $x = L$. The final weak forms are given by

$$0 = \int_0^L \left\{ EA\frac{dv_1}{dx}\left[\frac{du}{dx} + \frac{1}{2}\left(\frac{dw}{dx}\right)^2\right] - v_1 f \right\} dx \tag{1a}$$

$$0 = \int_0^L \left\{ EI\frac{d^2v_2}{dx^2}\frac{d^2w}{dx^2} + EA\frac{dv_2}{dx}\frac{dw}{dx}\left[\frac{du}{dx} + \frac{1}{2}\left(\frac{dw}{dx}\right)^2\right] - v_2 q \right\} dx - \left(\frac{dv_2}{dx}\right)\bigg|_L M_0 \tag{1b}$$

Note that for this case the weak form is not linear in u or w. However, a functional can be constructed for this using the potential operator theory (see: J. T. Oden and J. N. Reddy, *Variational Methods in Theoretical Mechanics,* 2nd ed., Springer-Verlag, Berlin, 1983 and Reddy [3]). The functional is given by

$$\Pi(u,w) = \int_0^L \left\{ \frac{EA}{2}\left[\left(\frac{du}{dx}\right)^2 + \frac{du}{dx}\left(\frac{dw}{dx}\right)^2 + \frac{1}{2}\left(\frac{dw}{dx}\right)^4\right] + \frac{EI}{2}\left(\frac{d^2w}{dx^2}\right)^2 + uf + wq \right\} dx - \frac{dw}{dx}\bigg|_L M_0$$

Problem 2.3: A second-order equation:

$$-\frac{\partial}{\partial x}\left(a_{11}\frac{\partial u}{\partial x} + a_{12}\frac{\partial u}{\partial y}\right) - \frac{\partial}{\partial y}\left(a_{21}\frac{\partial u}{\partial x} + a_{22}\frac{\partial u}{\partial y}\right) + f = 0 \quad \text{in} \quad \Omega$$

$$u = u_0 \ \text{ on } \ \Gamma_1, \quad \left(a_{11}\frac{\partial u}{\partial x} + a_{12}\frac{\partial u}{\partial y}\right)n_x + \left(a_{21}\frac{\partial u}{\partial x} + a_{22}\frac{\partial u}{\partial y}\right)n_y = t_0 \ \text{ on } \ \Gamma_2$$

where $a_{ij} = a_{ji}$ $(i,j = 1,2)$ and f are given functions of position (x,y) in a two-dimensional domain Ω, and u_0 and t_0 are known functions on portions Γ_1 and Γ_2 of the boundary Γ: $\Gamma_1 + \Gamma_2 = \Gamma$.

Solution: Multiplying with the weight function v and integrating by parts, we obtain the weak

$$\begin{aligned} 0 &= \int_\Omega \left[\frac{\partial v}{\partial x}\left(a_{11}\frac{\partial u}{\partial x} + a_{12}\frac{\partial u}{\partial y}\right) + \frac{\partial v}{\partial y}\left(a_{21}\frac{\partial u}{\partial x} + a_{22}\frac{\partial u}{\partial y}\right) + vf\right] dxdy \\ &\quad - \oint_\Gamma v\left[\left(a_{11}\frac{\partial u}{\partial x} + a_{12}\frac{\partial u}{\partial y}\right)n_x + \left(a_{21}\frac{\partial u}{\partial x} + a_{22}\frac{\partial u}{\partial y}\right)n_y\right] ds \\ &= \int_\Omega \left[\frac{\partial v}{\partial x}\left(a_{11}\frac{\partial u}{\partial x} + a_{12}\frac{\partial u}{\partial y}\right) + \frac{\partial v}{\partial y}\left(a_{21}\frac{\partial u}{\partial x} + a_{22}\frac{\partial u}{\partial y}\right) + vf\right] dxdy \\ &\quad - \int_{\Gamma_2} vt_0 \, ds \end{aligned}$$

PROPRIETARY MATERIAL. ©The McGraw-Hill Companies, Inc. All rights reserved.

where $v = 0$ on Γ_1. The bilinear form (symmetric only if $a_{12} = a_{21}$) and linear form are:

$$B(v,u) = \int_\Omega \left(a_{11}\frac{\partial v}{\partial x}\frac{\partial u}{\partial x} + a_{12}\frac{\partial v}{\partial x}\frac{\partial u}{\partial y} + a_{21}\frac{\partial v}{\partial y}\frac{\partial u}{\partial x} + a_{22}\frac{\partial v}{\partial y}\frac{\partial u}{\partial y}\right) dxdy$$
$$\ell(v) = -\int_\Omega vf\ dxdy + \int_{\Gamma_2} v\ t_0\ ds$$

The quadratic functional, when $a_{12} = a_{21}$, is given by

$$I(u) = \frac{1}{2}\int_\Omega \left[a_{11}\left(\frac{\partial u}{\partial x}\right)^2 + 2a_{12}\frac{\partial u}{\partial x}\frac{\partial u}{\partial y} + a_{22}\left(\frac{\partial u}{\partial y}\right)^2\right] dxdy$$
$$- \int_\Omega uf\ dxdy + \int_{\Gamma_2} u\ t_0\ ds$$

Problem 2.4: Navier-Stokes equations for two-dimensional flow of viscous, incompressible fluids:

$$\left.\begin{aligned} u\frac{\partial u}{\partial x} + v\frac{\partial u}{\partial y} &= -\frac{1}{\rho}\frac{\partial P}{\partial x} + \nu\left(\frac{\partial^2 u}{\partial x^2} + \frac{\partial^2 u}{\partial y^2}\right) \\ u\frac{\partial v}{\partial x} + v\frac{\partial v}{\partial y} &= -\frac{1}{\rho}\frac{\partial P}{\partial y} + \nu\left(\frac{\partial^2 v}{\partial x^2} + \frac{\partial^2 v}{\partial y^2}\right) \\ \frac{\partial u}{\partial x} + \frac{\partial v}{\partial y} &= 0 \end{aligned}\right\} \quad \text{in} \quad \Omega \tag{1}$$

$$u = u_0, \quad v = v_0 \quad \text{on} \quad \Gamma_1 \tag{2}$$

$$\left.\begin{aligned} \nu\left(\frac{\partial u}{\partial x}n_x + \frac{\partial u}{\partial y}n_y\right) - \frac{1}{\rho}Pn_x &= \hat{t}_x \\ \nu\left(\frac{\partial v}{\partial x}n_x + \frac{\partial v}{\partial y}n_y\right) - \frac{1}{\rho}Pn_y &= \hat{t}_y \end{aligned}\right\} \quad \text{on} \quad \Gamma_2 \tag{3}$$

Solution: For this set of three differential equations in two dimensions (see Chapter 10 and Reddy [7] for the physics behind the equations), we follow exactly the same procedure as before: use the three-step procedure for each equation. In the second step of the formulation, we must integrate by parts the terms involving P, u, and v, because these terms are required as a part of the natural boundary conditions given in Eq. (3). We do not integrate by parts the nonlinear terms in the first two equations, and no integration by parts is used in the third equation, because the boundary terms resulting from such integration-by-parts do not constitute physical

PROPRIETARY MATERIAL. ©The McGraw-Hill Companies, Inc. All rights reserved.

variables. We have

$$
\begin{aligned}
0 &= \int_\Omega \left[w_1 \left(u\frac{\partial u}{\partial x} + v\frac{\partial u}{\partial y} \right) - \frac{1}{\rho}\frac{\partial w_1}{\partial x} P + \nu \left(\frac{\partial w_1}{\partial x}\frac{\partial u}{\partial x} + \frac{\partial w_1}{\partial y}\frac{\partial u}{\partial y} \right) \right] dxdy \\
&\quad - \int_{\Gamma_2} w_1 \hat{t}_x ds \\
0 &= \int_\Omega \left[w_2 \left(u\frac{\partial v}{\partial x} + v\frac{\partial v}{\partial y} \right) - \frac{1}{\rho}\frac{\partial w_2}{\partial y} P + \nu \left(\frac{\partial w_2}{\partial x}\frac{\partial v}{\partial x} + \frac{\partial w_2}{\partial y}\frac{\partial v}{\partial y} \right) \right] dxdy \\
&\quad - \int_{\Gamma_2} w_2 \hat{t}_y ds \\
0 &= \int_\Omega w_3 \left(\frac{\partial u}{\partial x} + \frac{\partial v}{\partial y} \right) dxdy
\end{aligned}
$$

where (w_1, w_2, w_3) are weight functions.

Problem 2.5: Two-dimensional flow of viscous, incompressible fluids (stream function-vorticity formulation):

$$
\left.
\begin{aligned}
-\nabla^2\psi - \zeta &= 0 \\
-\nabla^2\zeta + \frac{\partial\psi}{\partial x}\frac{\partial\zeta}{\partial y} - \frac{\partial\psi}{\partial y}\frac{\partial\zeta}{\partial x} &= 0
\end{aligned}
\right\} \quad \text{in} \quad \Omega
$$

Assume that all essential boundary conditions are specified to be zero.

Solution: First, we note the the identity

$$
-w\nabla^2\psi = -w\nabla\cdot\nabla\psi = -\nabla\cdot(w\nabla\psi) + \nabla w\cdot\nabla\psi
$$

and then use the Green–Gauss theorem to obtain

$$
\begin{aligned}
-\int_\Omega w\nabla^2\psi \; dxdy &= \int_\Omega \left[-\nabla\cdot(w\nabla\psi) + \nabla w\cdot\nabla\psi \right] dxdy \\
&= -\oint_\Gamma w\hat{\mathbf{n}}\cdot\nabla\psi \; ds + \int_\Omega \nabla w\cdot\nabla\psi \; dxdy
\end{aligned}
$$

Multiplying the first equation with w_1 and the second equation with w_2 and integrating over the domain Ω and using the above identity we obtain (the boundary integrals vanish because $w_1 = 0$ and $w_2 = 0$ on the boundary Γ)

$$
0 = \int_\Omega (\nabla w_1\cdot\nabla\psi - w_1\zeta) \; dxdy \tag{1}
$$

$$
0 = \int_\Omega \left[\nabla w_2\cdot\nabla\zeta + w_2 \left(\frac{\partial\psi}{\partial x}\frac{\partial\zeta}{\partial y} - \frac{\partial\psi}{\partial y}\frac{\partial\zeta}{\partial x} \right) \right] dxdy \tag{2}
$$

PROPRIETARY MATERIAL. ©The McGraw-Hill Companies, Inc. All rights reserved.

Problem 2.6: Compute the coefficient matrix and the right-hand side of the N-parameter Ritz approximation of the equation

$$-\frac{d}{dx}\left[(1+x)\frac{du}{dx}\right] = 0 \quad \text{for} \quad 0 < x < 1$$

$$u(0) = 0, \quad u(1) = 1$$

Use algebraic polynomials for the approximation functions. Specialize your result for $N = 2$ and compute the Ritz coefficients.

Solution: The weak form for this problem is given by

$$0 = \int_0^1 (1+x)\frac{dv}{dx}\frac{du}{dx}dx$$

The variational problem is given by Eqs. (2.5.4a) and (2.5.4b), where [$\ell(\phi_i) = 0$ because there is no source term],

$$B_{ij} = B(\phi_i, \phi_j) = \int_0^1 (1+x)\frac{d\phi_i}{dx}\frac{d\phi_j}{dx}dx \tag{1a}$$

$$F_i = -B(\phi_i, \phi_0) = -\int_0^1 (1+x)\frac{d\phi_i}{dx}\frac{d\phi_0}{dx}dx \tag{1b}$$

The approximation functions ϕ_0 and ϕ_i should be chosen such that

$$\phi_0(0) = 0,\ \phi_0(1) = 1\ ;\quad \phi_i(0) = \phi_i(1) = 0,\ (i = 1, 2, ..., n) \tag{2}$$

The following algebraic polynomials satisfy the above requirements:

$$\phi_0 = x\ ,\quad \phi_i = x^i(1-x) \tag{3}$$

Substitution of Eq.(3) into Eqs.(1a,b) and evaluating the integrals, we obtain

$$B_{ij} = \frac{ij}{i+j-1} - \frac{ij+i+j}{i+j} + \frac{1-ij}{i+j+1} + \frac{(i+1)(j+1)}{i+j+2} \tag{4a}$$

$$F_i = \frac{1}{(1+i)(2+i)} \tag{4b}$$

For the two-parameter ($N = 2$) case, we have

$$B_{11} = \frac{1}{2}\ ,\quad B_{12} = B_{21} = \frac{17}{60}\ ,\quad B_{22} = \frac{7}{30}\ ,\quad F_1 = \frac{1}{6}\ ,\quad F_2 = \frac{1}{12}$$

and the parameters c_1 and c_2 are given by

$$c_1 = \frac{55}{131}\ ,\quad c_2 = -\frac{20}{131}$$

PROPRIETARY MATERIAL. ©The McGraw-Hill Companies, Inc. All rights reserved.

The two-parameter Ritz solution becomes

$$\begin{aligned} u(x) &= \phi_0 + c_1\phi_1 + c_2\phi_2 \\ &= x + \frac{55}{131}(x - x^2) - \frac{20}{131}(x^2 - x^3) \\ &= \frac{1}{131}(186x - 75x^2 + 20x^3) \end{aligned}$$

The exact solution is given by

$$u_{exact} = \frac{\log\ (1+x)}{\log\ 2}$$

Problem 2.7: Use trigonometric functions for the two-parameter approximation of the equation in Problem 2.6, and obtain the Ritz coefficients.

Solution: The following trigonometric functions satisfy the requirements in Eq.(2) of Problem 2.6:

$$\phi_0 = \sin\frac{\pi x}{2}\ , \quad \phi_i = \sin i\pi x$$

For two-parameter case, we have

$$\begin{aligned} B_{11} &= \int_0^1 (1+x)\frac{d\phi_1}{dx}\frac{d\phi_1}{dx}\ dx = \pi^2\int_0^1 (1+x)\cos\pi x\cos\pi x\ dx \\ B_{12} &= \int_0^1 (1+x)\frac{d\phi_1}{dx}\frac{d\phi_2}{dx}\ dx = 2\pi^2\int_0^1 (1+x)\cos\pi x\cos 2\pi x\ dx = B_{21} \\ B_{22} &= \int_0^1 (1+x)\frac{d\phi_2}{dx}\frac{d\phi_2}{dx}\ dx = 4\pi^2\int_0^1 (1+x)\cos 2\pi x\cos 2\pi x\ dx \\ F_1 &= -\int_0^1 (1+x)\frac{d\phi_1}{dx}\frac{d\phi_0}{dx}\ dx = -\frac{\pi^2}{2}\int_0^1 (1+x)\cos\pi x\cos\frac{\pi x}{2}\ dx \\ F_2 &= -\int_0^1 (1+x)\frac{d\phi_2}{dx}\frac{d\phi_0}{dx}\ dx = -\pi^2\int_0^1 (1+x)\cos 2\pi x\cos\frac{\pi x}{2}\ dx \end{aligned}$$

Using the following trigonometric identities,

$$\begin{aligned} \cos m\pi x\cos n\pi x &= \frac{1}{2}[\cos(m+n)\pi x + \cos(m-n)\pi x] \\ \cos^2 m\pi x &= \frac{1}{2}(1+\cos 2m\pi x) \end{aligned}$$

we obtain

$$\begin{bmatrix} \frac{3\pi^2}{4} & -\frac{20}{9} \\ -\frac{20}{9} & 3\pi^2 \end{bmatrix} \begin{Bmatrix} c_1 \\ c_2 \end{Bmatrix} = \begin{Bmatrix} -\frac{1}{9}(6\pi - 10) \\ \frac{68}{225} + \frac{4\pi}{15} \end{Bmatrix}$$

PROPRIETARY MATERIAL. ©The McGraw-Hill Companies, Inc. All rights reserved.

and the solution is

$$\begin{aligned} U_2(x) &= c_1 \sin \pi x + c_2 \sin 2\pi x + \sin \frac{\pi x}{2} \\ &= -0.12407 \sin \pi x + 0.02919 \sin 2\pi x + \sin \frac{\pi x}{2} \end{aligned}$$

Problem 2.8 A steel rod of diameter $d = 2$ cm, length $L = 25$ cm, and thermal conductivity $k = 50$ W/(m °C) is exposed to ambient air $T_\infty = 20$°C with a heat-transfer coefficient $\beta = 64$ W/(m^2 °C). Given that the left end of the rod is maintained at a temperature of $T_0 = 120$°C and the other end is exposed to the ambient temperature, determine the temperature distribution in the rod using a two-parameter Ritz approximation with polynomial approximation functions. The equation governing the problem is given by

$$-\frac{d^2\theta}{dx^2} + c\theta = 0 \quad \text{for} \quad 0 < x < 25 \text{ cm}$$

where $\theta = T - T_\infty$, T is the temperature, and c is given by

$$c = \frac{\beta P}{Ak} = \frac{\beta \pi D}{\frac{1}{4}\pi D^2 k} = \frac{4\beta}{kD} = 256 \text{ m}^2$$

P being the perimeter and A the cross sectional area of the rod. The boundary conditions are

$$\theta(0) = T(0) - T_\infty = 100°\text{C}, \quad \left(k\frac{d\theta}{dx} + \beta\theta\right)\Big|_{x=L} = 0$$

Solution: The weak form of the equation is given by

$$0 = \int_0^L \left(\frac{dv}{dx}\frac{d\theta}{dx} + cv\theta\right) dx + \hat{c}v(L)\theta(L) \tag{1}$$

where $\hat{c} = (\frac{\beta}{k})$. We have

$$B_{ij} = B(\phi_i, \phi_j) = \int_0^L \left(\frac{d\phi_i}{dx}\frac{d\phi_j}{dx} + c\phi_i\phi_j\right) dx + \hat{c}\phi_i(L)\phi_j(L) \tag{2a}$$

$$F_i = -B(\phi_i, \phi_0) = -\int_0^L \left(\frac{d\phi_i}{dx}\frac{d\phi_0}{dx} + c\phi_i\phi_0\right) dx - \hat{c}\phi_i(L)\phi_0(L) \tag{2b}$$

We choose the following functions

$$\phi_0 = \theta(0) = 100 \ , \quad \phi_i = x^i$$

PROPRIETARY MATERIAL. ©The McGraw-Hill Companies, Inc. All rights reserved.

From the values of the parameters given, we compute: $L = 0.25$m, $c = 256$, and $\hat{c} = (\frac{\beta}{k}) = 64/50$. The coefficients are evaluated to be

$$B_{11} = \frac{499}{300}\ , \quad B_{12} = B_{21} = \frac{133}{400}\ , \quad B_{22} = \frac{91}{1200}\ , \quad F_1 = -832\ , \quad F_2 = -\frac{424}{3}$$

or

$$\begin{bmatrix} \frac{499}{300} & \frac{133}{400} \\ \frac{133}{400} & \frac{91}{1200} \end{bmatrix} \begin{Bmatrix} c_1 \\ c_2 \end{Bmatrix} = \begin{Bmatrix} -832 \\ -\frac{424}{3} \end{Bmatrix}$$

The solution of these equations is

$$c_1 = -1,033.3859\ , \quad c_2 = 2,667.2635$$

The two-parameter Ritz solution is given by

$$\theta(x) = 100 - 1033.3859x + 2667.2635x^2$$

$$\theta(0.125) = 12.503°\text{C}\ , \quad \theta(0.25) = 8.3575°\text{C}$$

Problem 2.9: Set up the equations for the N-parameter Ritz approximation of the following equations associated with a simply supported beam and subjected to a uniform transverse load $q = q_0$:

$$\frac{d^2}{dx^2}\left(EI\frac{d^2w}{dx^2}\right) = q_0 \quad \text{for} \quad 0 < x < L$$

$$w = EI\frac{d^2w}{dx^2} = 0 \quad \text{at} \quad x = 0,\ L$$

(a) Use algebraic polynomials.

(b) Use trigonometric functions.

Compare the two-parameter Ritz solutions with the exact solution.

Solution: (a) Choose $\phi_0 = 0$ and $\phi_i = x^i(L - x)$, which satisfy the geometric conditions $w(0) = w(L) = 0$. The coefficients are given by

$$B_{ij} = EI\ ij(L)^{i+j-1}\left[\frac{(i-1)(j-1)}{i+j-3} - \frac{2(ij-1)}{i+j-2} + \frac{(i+1)(j+1)}{i+j-1}\right]$$

$$F_i = \frac{q_0(L)^{i+2}}{(1+i)(2+i)}$$

Note that the expression given above for B_{ij} is not valid when $i = 1$ and $j = 1, 2, \cdots, N$; we have,

$$B_{11} = 4EIL, \quad B_{1j} = B_{j1} = 2EIL^j, \quad (j > 1)$$

PROPRIETARY MATERIAL. ©The McGraw-Hill Companies, Inc. All rights reserved.

For $N = 1$ the Ritz coefficient is given by $c_1 = F_1/B_{11} = q_0L^2/24EI$; and for $N = 2$, the coefficients are: $c_1 = q_0L^2/(24EI)$, $c_2 = 0$. Hence, the one-parameter and two-parameter solution is the same

$$W_1 = W_2(x) = c_1\phi_1 = \frac{q_0L^2}{24EI}\, x(L-x) = \frac{q_0L^4}{24EI}\, \frac{x}{L}(1-\frac{x}{L})$$

(b) Choose $\phi_0 = 0$ and $\phi_i = \sin\frac{i\pi x}{L}$. The coefficients are given by

$$B_{ij} = \frac{EIL}{2}\left(\frac{i\pi}{L}\right)^4 \quad \text{for } i = j\ ; \quad B_{ij} = 0 \ \text{ for } i \neq j$$
$$F_i = \frac{2q_0L}{i\pi} \ \text{ if } i \text{ is odd}\,; \quad F_i = 0 \ \text{ if } i \text{ is even}$$

Hence,

$$c_i = \frac{F_i}{B_{ii}} = \frac{4q_0}{EIL}\left(\frac{L}{i\pi}\right)^5 = \frac{4q_0L^4}{EI}\left(\frac{1}{i\pi}\right)^5$$

Hence, the solution becomes

$$w_2(x) = c_1\phi_1 + c_3\phi_3 = \frac{4q_0L^4}{EI\pi^5}\sin\frac{\pi x}{L} + \frac{4q_0L^4}{243EI\pi^5}\sin\frac{3\pi x}{L}$$

Problem 2.10: Repeat Problem 2.9 for $q = q_0\sin(\pi x/L)$.

Solution: (a) We have ($a = \pi/L$),

$$\begin{aligned} F_i &= \int_0^L (q_0\sin ax)\ \ x^i(L-x)\ dx \\ &= q_0L\left[\frac{L^i}{a} + \frac{i}{a}\int_0^L x^{i-1}\cos ax\ dx\right] \\ &\quad - q_0\left[-\frac{L^{i+1}}{a} + \frac{i+1}{a}\int_0^L x^i\cos ax\ dx\right] \end{aligned}$$

For $N = 1$ we have $F_1 = 4q_0L^3/\pi^3$, and $c_1 = q_0L^2/(EI\pi^3)$. For $N = 2$ the coefficients are $F_2 = F_1L = 4q_0L^3/\pi^3$ and the solution is $c_1 = c_2L = 2q_0L^2/(3EI\pi^3)$.

(b) Choose $\phi_0 = 0$ and $\phi_i = \sin\frac{i\pi x}{L}$. The coefficients B_{ij} are the same as in Problem 2.9(b). The coefficients F_i are given by $F_1 = f_0L/2$ and $F_i = 0$ for $i \neq 1$. The Ritz coefficients are given by

$$c_1 = \frac{q_0L^4}{EI\pi^4}\ , \quad c_i = 0 \ \text{ if } i \neq 1$$

PROPRIETARY MATERIAL. ©The McGraw-Hill Companies, Inc. All rights reserved.

The Ritz solution coincides with the exact solution,

$$w = \frac{q_0 L^4}{EI\pi^4} \sin \frac{\pi x}{L}$$

Problem 2.11: Repeat Problem 2.9 for $q = Q_0 \delta(x - \frac{1}{2}L)$, where $\delta(x)$ is the Dirac delta function (i.e., a point load Q_0 is applied at the center of the beam).

Solution: The coefficients F_i are given by

$$\text{(a)} \quad F_i = Q_0 \left(\frac{L}{2}\right)^{i+1}$$

$$\text{(b)} \quad F_i = Q_0(-1)^{i-1} \text{ for } i \text{ odd, and } F_i = 0 \text{ for } i \text{ even}$$

Note that $c_2 = 0$ in both cases.

Problem 2.12: Develop the N-parameter Ritz solution for a simply supported beam under uniform transverse load using Timoshenko beam theory. The governing equations are given in Eqs. (2.4.32a, b). Use Trigonometric functions to approximate w and Ψ.

Solution: Assume solution of (w, Ψ) in the form,

$$w_M = \sum_{j=1}^{M} b_j \phi_j \equiv \sum_{j=1}^{M} b_j \sin \frac{j\pi x}{L} \ , \quad \Psi_N = \sum_{j=1}^{N} c_j \psi_j \equiv \sum_{j=1}^{N} c_j \cos \frac{j\pi x}{L} \tag{1}$$

Substitution of Eq. (1) into the weak forms ($S = GAK$ and $D = EI$)

$$0 = \int_0^L \left[GAK \frac{dv_1}{dx} \left(\frac{dw}{dx} + \Psi \right) + kv_1 w - v_1 q \right] dx \tag{2a}$$

$$0 = \int_0^L \left[EI \frac{dv_2}{dx} \frac{d\Psi}{dx} + GAK \ v_2 \left(\frac{dw}{dx} + \Psi \right) \right] dx \tag{2b}$$

we obtain following system of algebraic equations,

$$\begin{bmatrix} [K^{11}] & [K^{12}] \\ [K^{21}] & [K^{22}] \end{bmatrix} \begin{Bmatrix} \{b\} \\ \{c\} \end{Bmatrix} = \begin{Bmatrix} \{F^1\} \\ \{F^2\} \end{Bmatrix} \tag{3}$$

where

$$K_{ij}^{11} = \int_0^L \left(GAK \frac{d\phi_i}{dx} \frac{d\phi_j}{dx} + k\phi_i \phi_j \right) dx \ , \quad K_{ij}^{12} = \int_0^L GAK \frac{d\phi_i}{dx} \psi_j \ dx \ ,$$

$$K_{ij}^{21} = \int_0^L GAK \psi_i \frac{d\phi_j}{dx} \ dx \ , \quad K_{ij}^{22} = \int_0^L \left(EI \frac{d\psi_i}{dx} \frac{d\psi_j}{dx} + GAK \ \psi_i \psi_j \right) dx \tag{4a}$$

PROPRIETARY MATERIAL. ©The McGraw-Hill Companies, Inc. All rights reserved.

$$F_i^1 = \int_0^L \phi_i q \; dx \; , \quad F_i^2 = 0 \tag{4b}$$

Substituting $\phi_i = \sin(i\pi x/L)$ and $\psi_i = \cos(i\pi x/L)$ into the above equations and evaluating the integrals, we obtain

$$K_{ij}^{11} = GAK\frac{L}{2}\left(\frac{i\pi}{L}\right)\left(\frac{j\pi}{L}\right) + \frac{kL}{2} \; , \quad K_{ij}^{12} = GAK\frac{L}{2}\left(\frac{i\pi}{L}\right) = K_{ji}^{21} \; ,$$

$$K_{ij}^{22} = \frac{L}{2}\left[GAK + EI\left(\frac{i\pi}{L}\right)\left(\frac{j\pi}{L}\right)\right] \tag{5a}$$

for $i = j$, and

$$K_{ij}^{\alpha\beta} = 0 \; , \quad \text{if } i \neq j \tag{5b}$$

$$F_i^1 = -\frac{2q_0 L}{i\pi} \quad \text{for } i = \text{odd and} \quad F_i^1 = 0 \quad \text{for } i = \text{even} \tag{5c}$$

♠ New Problem 2.2:

A number of other problems associated with the Timoshenko beam theory. (1) The same problem as above, with algebraic polynomials; (2) a cantilever beam, clamped at the left end ($x = 0$) and subjected to an end moment, M_0 at $x = L$. The latter can be assigned with (a) algebraic or (b) trigonometric approximation functions. For example, for Problem 2a, we have the following (M, N)-parameter Ritz solution with algebraic polynomials,

$$w_M = \sum_{j=1}^{M} b_j \phi_j \equiv \sum_{j=1}^{M} b_j x^j \; , \quad \Psi_N = \sum_{j=1}^{N} c_j \psi_j \equiv \sum_{j=1}^{N} c_j x^j \tag{1}$$

The matrix equations are of the form as given in Eq.(3) of Problem 2.12, and the coefficient matrices are the same as given in Eq. (4a) of Problem 2.12, with the following definition of the right-hand vectors,

$$F_i^1 = \int_0^L \phi_i q_0 \; dx \; , \quad F_i^2 = -M_0 \psi_i(L) \tag{2}$$

For the choice of approximation functions, $\phi_i = \psi_i = x^i$, the coefficients can be evaluated as,

$$\begin{aligned} K_{ij}^{11} &= GAK\frac{ij}{i+j-1}\,(L)^{i+j-1} \; , \quad K_{ij}^{12} = GAK\frac{i}{i+j}\,(L)^{i+j} \\ K_{ij}^{21} &= GAK\frac{j}{i+j}\,(L)^{i+j} \; , \quad F_i^1 = \frac{q_0}{i+1}\,(L)^{i+1} \; , \quad F_i^2 = -M_0\,(L)^i \\ K_{ij}^{22} &= EI\frac{ij}{i+j-1}\,(L)^{i+j-1} + GAK\frac{1}{i+j+1}\,(L)^{i+j+1} \end{aligned} \tag{3}$$

PROPRIETARY MATERIAL. ©The McGraw-Hill Companies, Inc. All rights reserved.

For $M = N = 1$, we have

$$\begin{aligned} b_1 &= \frac{q_0 L^3}{6CEI}\left(\frac{3EI}{GAKL^2}+1\right)+\frac{M_0 L}{2CEI} \\ c_1 &= -\frac{1}{CEI}\left(\frac{q_0 L^2}{4}+M_0\right) \ , \quad C = \left(1+\frac{GAK}{EI}-\frac{L^2}{12}\right) \end{aligned} \tag{4}$$

For $M = 2$ and $N = 1$, we obtain

$$\begin{aligned} b_1 &= \frac{q_0 L}{GAK} \ , \quad c_1 = -\frac{1}{CEI}\left(\frac{q_0 L^2}{6}+M_0\right) \\ b_2 &= -\frac{q_0 L^2}{12EI}\left(1-\frac{6EI}{GAKL^2}\right)+\frac{M_0}{2EI} \end{aligned} \tag{5}$$

Note that the Timoshenko beam theory does not behave well for $M = N = 1$ due to numerical locking. However, it behaves well when the number of terms are increased. One can use one more term for w than for Ψ (i.e., $M = N + 1$). Indeed, for $M = 4$ and $N = 3$, one obtains the exact solution,

$$\begin{aligned} w(x) &= \frac{q_0 x^2}{24EI}(6L^2-4Lx+x^2)+\frac{q_0 x}{2GAK}(2L-x)+\frac{M_0 x^2}{2EI} \\ \Psi(x) &= \frac{q_0 x}{6EI}(-3L^2+3Lx-x^2)-\frac{M_0 x}{EI} \end{aligned} \tag{6}$$

Problem 2.13: Solve the Poisson equation governing heat conduction in a square region:

$$-k\nabla^2 T = g_0$$

$$T = 0 \quad \text{on sides} \quad x = 1 \quad \text{and} \quad y = 1 \tag{1}$$

$$\frac{\partial T}{\partial n} = 0 \quad \text{(insulated) on sides} \quad x = 0 \quad \text{and} \quad y = 0 \tag{2}$$

using a one-parameter Ritz approximation of the form

$$T_1(x,y) = c_1(1-x^2)(1-y^2) \tag{3}$$

Solution: The weak form of the equation is given by

$$0 = \int_0^1\int_0^1 \left[k\left(\frac{\partial v}{\partial x}\frac{\partial T}{\partial x}+\frac{\partial v}{\partial y}\frac{\partial T}{\partial y}\right)-vg_0\right]dxdy \tag{4}$$

PROPRIETARY MATERIAL. ©The McGraw-Hill Companies, Inc. All rights reserved.

The coefficients B_{11} and F_1 are given by

$$\begin{aligned} B_{11} &= \int_0^1 \int_0^1 k \left(\frac{\partial \phi_1}{\partial x}\frac{\partial \phi_1}{\partial x} + \frac{\partial \phi_1}{\partial y}\frac{\partial \phi_1}{\partial y} \right) \, dxdy \\ &= \int_0^1 \int_0^1 k \left[4x^2(1-y^2)^2 + 4y^2(1-x^2)^2 \right] dxdy = \frac{64}{45}k \end{aligned} \tag{5a}$$

$$\begin{aligned} F_1 &= \int_0^1 \int_0^1 g_0 \phi_1 \, dxdy \\ &= \int_0^1 \int_0^1 g_0 (1-x^2)(1-y^2) \, dxdy = \frac{4}{9} g_0 \end{aligned} \tag{5b}$$

and the parameter c_1 is given by

$$c_1 = \frac{F_1}{B_{11}} = \frac{5g_0}{16k} \tag{6}$$

Problem 2.14: Determine ϕ_i for a two-parameter Galerkin approximation with algebraic approximation functions for Problem 2.8.

Solution: We must choose ϕ_0 such that it satisfies *all* specified boundary conditions:

$$\phi_0(0) = \theta(0) \ , \ \left[\frac{d\phi_0}{dx} + \hat{c}\phi_0 \right]_{x=L} = 0 \tag{1}$$

and ϕ_i must be selected such that it satisfies the homogeneous form of *all* specified boundary conditions:

$$\phi_i(0) = 0 \ , \ \left[\frac{d\phi_i}{dx} + \hat{c}\phi_i \right]_{x=L} = 0 \tag{2}$$

To construct these functions, we begin with $\phi_0 = a + bx$, and determine the constants a and b such that ϕ_0 satisfies the conditions in Eq. (1). We obtain,

$$\phi_0 = 100 \left[1 - \frac{\hat{c}}{1+\hat{c}L} x \right]$$

Similarly, we begin with $\phi_1 = a + bx + cx^2$ (we must have one more parameters than the number of conditions) and determine a, b and c such that ϕ_1 satisfies the conditions in Eq. (2). We obtain,

$$\phi_1 = x \left[1 - \frac{1+\hat{c}L}{2+\hat{c}L} \frac{x}{L} \right]$$

The next function should be higher order than ϕ_1; and there are two choices: $\phi_2 = a + bx + cx^3$ and $\phi_2 = a + bx^2 + cx^3$. For the first choice, we obtain,

$$\phi_2 = x \left[1 - \frac{1+\hat{c}L}{3+\hat{c}L} (\frac{x}{L})^2 \right]$$

PROPRIETARY MATERIAL. ©The McGraw-Hill Companies, Inc. All rights reserved.

It is clear that the Galerkin and other weighted residual methods involve cumbersome algebra and result in complicated expressions for the approximation functions.

Problem 2.15: Consider the (Neumann) boundary value problem

$$-\frac{d^2u}{dx^2} = f \quad \text{for} \quad 0 < x < L$$

$$\left(\frac{du}{dx}\right)\bigg|_{x=0} = \left(\frac{du}{dx}\right)\bigg|_{x=L} = 0$$

Find a two-parameter Galerkin approximation of the problem using trigonometric approximation functions, when (a) $f = f_0 \cos(\pi x/L)$ and (b) $f = f_0$.

Solution: For this problem, we can choose $\phi_0 = 0$ or a constant (i.e., the solution can be determined only within a constant) and $\phi_i = \cos i\pi x/L$. The residual is given by

$$R = -\sum_{i=1}^{N} c_j \frac{d^2\phi_j}{dx^2} - f$$

The weighted-residual statements are given by

$$0 = \int_0^L \cos\frac{\pi x}{L} R\ dx = (\frac{\pi}{L})^2 \frac{L}{2} c_1 - \int_0^L f \cos\frac{\pi x}{L}\ dx$$
$$0 = \int_0^L \cos\frac{2\pi x}{L} R\ dx = (\frac{2\pi}{L})^2 \frac{L}{2} c_2 - \int_0^L f \cos\frac{2\pi x}{L}\ dx$$

For (a) $f = f_0 \cos\frac{\pi x}{L}$, we obtain $c_1 = \frac{f_0 L^2}{\pi^2}$ and $c_2 = 0$. When (b) $f = f_0$, we obtain $c_1 = c_2 = 0$.

♠ Part (b) solution indicates that the Neumann problem does not have a solution for the case in which the forcing function is a constant (because the *solvability conditions* are not satisfied by the data, f). For additional discussion on this, the reader may consult the book by Reddy [3].

Problem 2.16: Find a one-parameter approximate solution of the nonlinear equation

$$-2u\frac{d^2u}{dx^2} + \left(\frac{du}{dx}\right)^2 = 4 \quad \text{for} \quad 0 < x < 1$$

subject to the boundary conditions $u(0) = 1$ and $u(1) = 0$, and compare it with the exact solution $u_0 = 1 - x^2$. Use (a) the Galerkin method, (b) the least-squares method, and (c) the Petrov–Galerkin method with weight function $w = 1$.

PROPRIETARY MATERIAL. ©The McGraw-Hill Companies, Inc. All rights reserved.

Solution: We must choose ϕ_0 such that it satisfies *all* specified boundary conditions:

$$\phi_0(0) = 1 \ , \ \phi_0(1) = 0 \tag{1}$$

and ϕ_i must be selected such that it satisfies the homogeneous form of *all* specified boundary conditions:

$$\phi_i(0) = 0 \ , \ \phi_i(1) = 0 \tag{2}$$

Obviously, the following choice would meet the requirements,

$$\phi_0 = 1 - x \ , \ \phi_1 = x(1-x) \tag{3}$$

The residual is given by

$$\begin{aligned} R &= -2c_1(c_1\phi_1 + \phi_0)\frac{d^2\phi_1}{dx^2} + (c_1\frac{d\phi_1}{dx} + \frac{d\phi_0}{dx})^2 - 4 \\ &= -2\left[(1-x) + c_1(x - x^2)\right](-2c_1) + \left[-1 + c_1(1-2x)\right]^2 - 4 \\ &= -3 + 2c_1 + (c_1)^2 \end{aligned} \tag{4}$$

(a) The weighted-residual statement for the Galerkin method is given by

$$0 = \int_0^1 (x - x^2)R \ dx = \frac{1}{6}\left[-3 + 2c_1 + (c_1)^2\right]$$

which gives two solutions, $(c_1)_1 = 1$ and $(c_1)_2 = -3$. We choose $c_1 = 1$ on the basis of the criterion that $\int_0^1 R \ dx$ is a minimum. For $c_1 = 1$, the Galerkin solution coincides with the exact solution, $u(x) = 1 - x^2$.

(b) The least-squares statement is given by

$$0 = \int_0^1 \frac{dR}{dc_1} R \ dx = \int_0^1 2(1 + c_1)\left[-3 + 2c_1 + (c_1)^2\right] \ dx$$

which gives three solutions, $(c_1)_1 = 1$, $(c_1)_2 = -3$, and $(c_1)_3 = -1$. Once again, we choose $c_1 = 1$.

Problem 2.17: Give a one-parameter Galerkin solution of the equation

$$-\nabla^2 u = 1 \quad \text{in} \quad \Omega \quad (= \text{unit square})$$

$$u = 0 \quad \text{on} \quad \Gamma$$

Use (a) algebraic and (b) trigonometric approximation functions.

PROPRIETARY MATERIAL. ©The McGraw-Hill Companies, Inc. All rights reserved.

Solution: For this problem, all of the boundary conditions are of the essential type. Hence, the difference between the Ritz and Galerkin methods disappears. In both methods, we must choose ϕ_0 and ϕ_i such that

$$\phi_0 = 0 \ , \ \phi_i = 0 \ \text{ on } \Gamma \tag{1}$$

We choose the approximation in the form,

$$u_1 = c_{11} \ \sin \pi x \ \sin \pi y \tag{2}$$

and compute the residual,

$$R = \left[2c_{11}\pi^2 \sin \pi x \ \sin \pi y - 1 \right] \tag{3}$$

The Galerkin integral yields the result,

$$\begin{aligned} 0 &= \int_\Omega R \ \sin \pi x \ \sin \pi y \ dxdy \\ &= \int_0^1 \int_0^1 \left[2c_{11}\pi^2 \sin^2 \pi x \ \sin^2 \pi y - \sin \pi x \ \sin \pi y \right] dxdy \\ &= 2c_{11}\pi^2 \left(\frac{1}{4} \right) - \frac{4}{\pi^2} \end{aligned} \tag{4}$$

from which we obtain, $c_{11} = \frac{8}{\pi^4}$.

Problem 2.18: Repeat Problem 2.17(a) for an equilateral triangular domain. *Hint:* Use the product of equations of the lines representing the sides of the triangle for the approximation function. *Answer:* $c_1 = -\frac{1}{2}$.

Solution: For the coordinate system shown in the figure, the equations of the boundary segments AB, BC, and CA are, respectively:

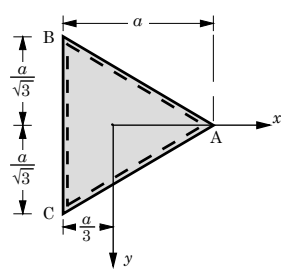

$$x - \sqrt{3}y - \frac{2}{3}a = 0 \ , \ x + \sqrt{3}y - \frac{2}{3}a = 0 \ , \ \ x + \frac{1}{3}a = 0$$

Therefore, a suitable choice of ϕ_1 $(\phi_0 = 0)$ is

$$\phi_1 = \left(-\frac{1}{2a} \right) (x - \sqrt{3}y - \frac{2}{3}a)(x + \sqrt{3}y - \frac{2}{3}a)(x + \frac{1}{3}a)$$

because ϕ_1 would be zero on any of the three line segments (*i.e.* boundary), satisfying the requirement, $\phi_1 = 0$ on Γ. The multiplicative constant added in the definition of ϕ_1 is for only normalization purpose. The residual becomes,

$$R = -\nabla^2 u - 1 = -c_1 \nabla^2 \phi_1 - 1 = -2c_1 - 1$$

PROPRIETARY MATERIAL. ©The McGraw-Hill Companies, Inc. All rights reserved.

Since the residual is a constant, the coefficient c_1, in *any* weighted–residual method is given by $c_1 = -1/2$.

Problem 2.19: Consider the differential equation

$$-\frac{d^2u}{dx^2} = \cos \pi x \quad \text{for} \quad 0 < x < 1$$

subject to the following three sets of boundary conditions:

(1) $u(0) = 0, \quad u(1) = 0$

(2) $u(0) = 0, \quad \left(\frac{du}{dx}\right)\Big|_{x=1} = 0$

(3) $\left(\frac{du}{dx}\right)\Big|_{x=0} = 0, \quad \left(\frac{du}{dx}\right)\Big|_{x=1} = 0$

Determine a three-parameter solution, with trigonometric functions, using (a) the Ritz method, (b) the least-squares method, and (c) collocation at $x = \frac{1}{4}$, $\frac{1}{2}$, and $\frac{3}{4}$, and compare with the exact solutions:

(1) $u_0 = \pi^{-2}(\cos \pi x + 2x - 1)$

(2) $u_0 = \pi^{-2}(\cos \pi x - 1)$

(3) $u_0 = \pi^{-2} \cos \pi x$

Solution: This problem has three sets of boundary conditions and three different methods are to be used to determine the solution. Hence, it is advised that the instructor should assign only one of the many combinations: (i) Solve the problem for Set 1 boundary conditions with any one of the methods (three problems); (ii) solve Set 2 boundary conditions with any one of the methods (three problems); and (iii) solve Set 3 boundary conditions with any one of the methods (three problems). Solutions for all cases are included here.

Set 1: $u(0) = u(1) = 0$.

Ritz method. The bilinear and linear forms are given by

$$B(u, v) = \int_0^1 \frac{du}{dx}\frac{dv}{dx} dx \ , \quad \ell(v) = \int_0^1 v \cos \pi x dx$$

We use $\phi_0 = 0$ and $\phi_i = \sin i\pi x$. We obtain

$$B_{ij} = \int_0^1 (i\pi)^2 \cos i\pi x \ \cos j\pi x \ dx = \left\{ \begin{matrix} 0, & \text{if } j \neq i \\ \frac{(i\pi)^2}{2}, & \text{if } j = i \end{matrix} \right\}. \tag{1}$$

$$F_i = \left\{ \begin{matrix} 0, & \text{if } i \text{ is odd} \\ \frac{2i}{\pi(i^2-1)}, & \text{if } i \text{ is even} \end{matrix} \right\}. \tag{2}$$

PROPRIETARY MATERIAL. ©The McGraw-Hill Companies, Inc. All rights reserved.

The solution is given by

$$c_i = \frac{4}{\pi^3}\frac{1}{i(i^2-1)} \ , \quad \text{for } i \text{ even} \tag{3}$$

Weighted-residual methods. The residual is given by

$$R = -\frac{d^2U_N}{dx^2} - \cos\pi x = \sum_{j=1}^{N} c_j(j\pi)^2 \sin j\pi x - \cos\pi x \ , \quad \text{and} \quad \frac{\partial R}{\partial c_i} = (i\pi)^2 \sin i\pi x \tag{4}$$

The least-squares method requires

$$0 = \int_0^1 (i\pi)^2 \sin i\pi x \left(\sum_{j=1}^{N} c_j(j\pi)^2 \sin j\pi x - \cos\pi x \right) dx$$

The multiplicative factor $(i\pi)^2$ can be deleted. Then, it is clear that the least squares method and the Galerkin method give the same equations. Furthermore, the solution of the Galerkin and least squares methods would be the same as that of the Ritz method.

For the collocation method, we have

$$\begin{aligned}
0 &= R(x=\frac{1}{4}) = \sum_{j=1}^{3} c_j(j\pi)^2 \sin\frac{j\pi}{4} - \cos\frac{\pi}{4} \\
&= c_1(\pi)^2\left(\frac{1}{\sqrt{2}}\right) + c_2(2\pi)^2 + c_3(3\pi)^2\left(\frac{1}{\sqrt{2}}\right) - \frac{1}{\sqrt{2}} \\
0 &= R(x=\frac{1}{2}) = \sum_{j=1}^{3} c_j(j\pi)^2 \sin\frac{j\pi}{2} - \cos\frac{\pi}{2} \\
&= c_1(\pi)^2 + c_2\cdot 0 - c_3(3\pi)^2 - 0 \\
0 &= R(x=\frac{3}{4}) = \sum_{j=1}^{3} c_j(j\pi)^2 \sin\frac{3j\pi}{4} - \cos\frac{3\pi}{4} \\
&= c_1(\pi)^2\left(\frac{1}{\sqrt{2}}\right) - c_2(2\pi)^2 + c_3(3\pi)^2\left(\frac{1}{\sqrt{2}}\right) + \frac{1}{\sqrt{2}}
\end{aligned} \tag{5}$$

which gives $c_1 = c_3 = 0$ and $c_2 = \sqrt{2}/8\pi^2$.

Set 2: $u(0) = \frac{du}{dx}(1) = 0$. For the Ritz method, we use $\phi_0 = 0,\ \phi_1 = x,\ \phi_2 = \sin\pi x$ and $\phi_3 = \sin 2\pi x$. This choice makes the variational solution not vanish at $x = 1$. For convenience, we denote the new set by $\{\hat{\phi}_0 = x, \hat{\phi}_1 = \sin\pi x, \hat{\phi}_2 = \sin 2\pi x\}$. For the

PROPRIETARY MATERIAL. ©The McGraw-Hill Companies, Inc. All rights reserved.

Ritz method, we need to evaluate only $B_{0j}, j = 0, 1, 2$ and F_0. All other coefficients are the same as in Eqs.(1) and (2). We have,

$$B_{00} = 1, \quad B_{01} = B_{02} = 0, \quad F_0 = -\frac{2}{\pi^2} \tag{6}$$

and the parameters $c_i, i = 1, 2, 3$ are the same as in Eq. (3), and c_0 is given by $c_0 = -\frac{2}{\pi^2}$. Thus the solution of Set 2 boundary conditions differs from that of Set 1 by the term, $(-2x/\pi^2)$.

For the weighted-residual methods, the above set of approximation functions is not admissible, because $\{\hat{\phi}_0 = x, \hat{\phi}_1 = \sin \pi x, \hat{\phi}_2 = \sin 2\pi x\}$ does not satisfy the natural boundary condition, $u(0) = \frac{du}{dx}(1) = 0$. We select an alternative set,

$$u_N = \sum_{j=1}^{N} c_j \phi_j(x) + \phi_0 = 0 \ , \quad \phi_0 = 0 \ , \quad \phi_j(x) = 1 - \cos j\pi x \tag{7}$$

The residual is given by

$$R = -\sum_{j=1}^{N} c_j (j\pi)^2 \cos j\pi x - \cos \pi x \ , \quad \text{and} \quad \frac{\partial R}{\partial c_i} = -(i\pi)^2 \cos i\pi x \tag{8}$$

Clearly, weighted-integral statements for the Galerkin and least-squares methods differ by a multiplicative constant $(-(i\pi)^2)$, and hence give the same equations for the undetermined parameters. We obtain,

$$B_{ij} = -\frac{(j\pi)^2}{2} \text{ when } i = j \ ; \ B_{ij} = 0 \text{ when } i \neq j$$

$$F_1 = \frac{1}{2} \ , \quad F_i = 0 \ \text{ when } i \neq 1 \tag{9}$$

The solution is given by

$$c_1 = -\frac{1}{\pi^2} \ , \quad c_i = 0 \ \text{ when } i \neq 1 \tag{10}$$

The variational solution coincides with the exact solution

$$u(x) = \frac{1}{\pi^2}(\cos \pi x - 1)$$

The collocation method gives the following algebraic equations

$$0 = R(x = \frac{1}{4}) = -\sum_{j=1}^{3} c_j (j\pi)^2 \cos \frac{j\pi}{4} - \cos \frac{\pi}{4}$$

PROPRIETARY MATERIAL. ©The McGraw-Hill Companies, Inc. All rights reserved.

$$
\begin{aligned}
&= -c_1(\pi)^2\left(\frac{1}{\sqrt{2}}\right) - c_2\cdot 0 + c_3(3\pi)^2\left(\frac{1}{\sqrt{2}}\right) - \frac{1}{\sqrt{2}} \\
0 = R(x=\frac{1}{2}) &= -\sum_{j=1}^{3} c_j(j\pi)^2\cos\frac{j\pi}{2} - \cos\frac{\pi}{2} \\
&= -c_1\cdot 0 + c_2(2\pi)^2 - c_3\cdot 0 - 0 \\
0 = R(x=\frac{3}{4}) &= -\sum_{j=1}^{3} c_j(j\pi)^2\cos\frac{3j\pi}{4} - \cos\frac{3\pi}{4} \\
&= c_1(\pi)^2\left(\frac{1}{\sqrt{2}}\right) - c_2\cdot 0 + c_3(3\pi)^2\left(\frac{1}{\sqrt{2}}\right) + \frac{1}{\sqrt{2}} \qquad (10)
\end{aligned}
$$

which gives $c_1 = -\frac{1}{\pi^2}$ and $c_2 = c_3 = 0$.

Set 3: $\frac{du}{dx}(0) = \frac{du}{dx}(1) = 0$ Here we select the following approximation for all methods,

$$u_N = \sum_{j=1}^{N} c_j\phi_j(x) + \phi_0 = 0\ , \quad \phi_0 = 0\ , \quad \phi_j(x) = \cos j\pi x \qquad (11)$$

The residual is given by

$$R = \sum_{j=1}^{N} c_j(j\pi)^2\cos j\pi x - \cos\pi x\ , \quad \text{and} \quad \frac{\partial R}{\partial c_i} = (i\pi)^2\cos i\pi x \qquad (12)$$

which differs from that given in Eq. (7) by only the sign in front of the parameter, c_j. Hence, we expect to obtain the negative of the solution in Eq.(10) in all methods: $c_1 = \frac{1}{\pi^2}$ and $c_i = 0$ for all $i \neq 1$. Thus, the variational solutions coincide with the exact solution,

$$u(x) = \frac{\cos\pi x}{\pi^2}$$

Problem 2.20: Consider a cantilever beam of variable flexural rigidity, $EI = a_0[2-(x/L)^2]$ and carrying a distributed load, $q = q_0[1-(x/L)]$. Find a three-parameter solution using the collocation method.

Solution: Let $W_3(x) = c_1x^2 + c_2x^3 + c_3x^4$ and compute the residual,

$$
\begin{aligned}
\mathcal{R} &= \frac{d^2}{dx^2}\left[a_0(2-\frac{x^2}{L^2})\frac{d^2w}{dx^2}\right] - q_0\left(1-\frac{x}{L}\right) \\
&= a_0\left[-\frac{2}{L^2}\frac{d^2w}{dx^2} + (2-\frac{x^2}{L^2})\frac{d^4w}{dx^4}\right] - q_0\left(1-\frac{x}{L}\right) \\
&= a_0\left[-\frac{2}{L^2}(2c_1 + 6c_2x + 12c_3x^2) + (2-\frac{x^2}{L^2})24c_3\right] - q_0\left(1-\frac{x}{L}\right) \\
&= a_0\left[48(1-\frac{x^2}{L^2})c_3 - \frac{4}{L^2}c_1 - 12\frac{x}{L^2}c_2\right] - q_0\left(1-\frac{x}{L}\right)
\end{aligned}
$$

PROPRIETARY MATERIAL. ©The McGraw-Hill Companies, Inc. All rights reserved.

We take the collocation points at $x = \frac{L}{4}$, $\frac{L}{2}$, and $\frac{3L}{4}$ and obtain

$$\mathcal{R}(\frac{L}{4}) = a_0\left(-\frac{4}{L^2}c_1 - \frac{3}{L}c_2 + 45c_3\right) - \frac{3}{4}q_0 = 0$$
$$\mathcal{R}(\frac{L}{2}) = a_0\left(-\frac{4}{L^2}c_1 - \frac{6}{L}c_2 + 36c_3\right) - \frac{1}{2}q_0 = 0$$
$$\mathcal{R}(\frac{3L}{4}) = a_0\left(-\frac{4}{L^2}c_1 - \frac{9}{L}c_2 + 21c_3\right) - \frac{1}{4}q_0 = 0$$

The solution of these equations is

$$c_1 = -\frac{q_0 L^2}{4a_0}\ , \quad c_2 = \frac{q_0 L}{12a_0}\ , \quad \text{and} \quad c_3 = 0$$

Problem 2.21: Consider the problem of finding the fundamental frequency of a circular membrane of radius a, fixed at its edge. The governing equation for axisymmetric vibration is

$$-\frac{1}{r}\frac{d}{dr}\left(r\frac{du}{dr}\right) - \lambda u = 0 \quad 0 < r < a$$

where λ is the frequency parameter and u is the deflection of the membrane. (a) Determine the trigonometric approximation functions for the Galerkin method, (b) use one-parameter Galerkin approximation to determine λ, and (c) use two-parameter Galerkin approximation to determine λ.

Solution: (a) The approximation functions that satisfy the boundary condition $u = 0$ at $r = a$ (and $du/dr = 0$ at $r = 0$) are

$$\phi_1(r) = \cos\frac{\pi r}{2a}, \quad \phi_2(r) = \cos\frac{3\pi r}{2a}, \quad \phi_3(r) = \cos\frac{5\pi r}{2a} \quad \ldots$$

(b) For one-parameter approximation $u(r) \approx U_1(r) = c_1\cos(\pi r/2a)$, the Galerkin integral is

$$\int_0^a \left\{\frac{1}{r}\frac{d}{dr}\left[r\frac{\pi}{2a}\left(-\sin\frac{\pi r}{2a}\right)\right]c_1 + \lambda c_1\cos\frac{\pi r}{2a}\right\}\cos\frac{\pi r}{2a}\ rdr = 0$$

from which we obtain

$$\frac{\pi^2}{4}\left(\frac{1}{2} + \frac{2}{\pi^2}\right) - \lambda\left(\frac{1}{2} - \frac{2}{\pi^2}\right) = 0$$

It follows that $\lambda = 5.832/a^2$.

PROPRIETARY MATERIAL. ©The McGraw-Hill Companies, Inc. All rights reserved.

(c) For a two-parameter Ritz approximation $U_2(r) = c_1 \cos(\pi r/2a) + c_2 \cos(3\pi r/2a)$, we obtain

$$(1.7337 - 0.29736\lambda a^2)c_1 + (0.20264\lambda a^2 - 1.5)c_2 = 0$$
$$(0.20264\lambda a^2 - 1.5)c_1 + (11.603 - 0.47748\lambda a^2)c_2 = 0$$

Setting the determinant of the above equations to zero, we obtain a quadratic equation in λ

$$0.10092\bar{\lambda}^2 - 3.6701\bar{\lambda} + 17.866 = 0, \quad \bar{\lambda} = \lambda a^2$$

The smaller root of the equation is $\lambda = 5.792/a^2$. The exact value is $\lambda = 5.779/a^2$.

Problem 2.22: Find the first two eigenvalues associated with the differential equation

$$-\frac{d^2u}{dx^2} = \lambda u, \quad 0 < x < 1$$
$$u(0) = 0, \quad u(1) + u'(1) = 0$$

Use the least squares method. Use the operator definition to be $A = -(d^2/dx^2)$ to avoid increasing the degree of the characteristic polynomial for λ.

Solution: For this problem, the choice of the operator A is crucial. If we use the definition $A = -d^2/dx^2 - \lambda$, we obtain the result

$$\begin{aligned}
0 &= \int_0^1 A(\phi_i)\mathcal{R}\ dx = \sum_{j=1}^{n} \left[\int_0^1 A(\phi_i)A(\phi_j)\ dx\right] c_j \\
&= \sum_{j=1}^{n} \left[\int_0^1 \left(\frac{d^2\phi_i}{dx^2} + \lambda\phi_i\right)\left(\frac{d^2\phi_j}{dx^2} + \lambda\phi_j\right)\ dx\right] c_j \\
&= \sum_{j=1}^{n} \left\{\int_0^1 \left[\frac{d^2\phi_i}{dx^2}\frac{d^2\phi_j}{dx^2} + \lambda\left(\phi_i\frac{d^2\phi_j}{dx^2} + \frac{d^2\phi_i}{dx^2}\phi_j\right) + \lambda^2\phi_i\phi_j\right]\ dx\right\} c_j \qquad (1)
\end{aligned}$$

which is a quadratic (matrix) eigenvalue problem, and it is more difficult (but not impossible) to solve.

Alternatively, we identify the operator A of the problem to be $A = -d^2/dx^2$ so that it does not include the unknown, λ (not consistent with the definition of the method). Then

$$\begin{aligned}
0 &= \int_0^1 A(\phi_i)\mathcal{R}\ dx = \sum_{j=1}^{n} \left\{\int_0^1 A(\phi_i)\left[A(\phi_j) - \lambda\phi_j\right]\ dx\right\} c_j \\
&= \sum_{j=1}^{n} \left[\int_0^1 \left(\frac{d^2\phi_i}{dx^2}\frac{d^2\phi_j}{dx^2} + \lambda\frac{d^2\phi_i}{dx^2}\phi_j\right)\ dx\right] c_j \\
&= \sum_{j=1}^{n} \left(K_{ij} - \lambda M_{ij}\right) c_j \qquad (2a)
\end{aligned}$$

PROPRIETARY MATERIAL. ©The McGraw-Hill Companies, Inc. All rights reserved.

where

$$K_{ij} = \int_0^1 A(\phi_i)A(\phi_j)\ dx = \int_0^1 \frac{d^2\phi_i}{dx^2}\frac{d^2\phi_j}{dx^2}\ dx$$
$$M_{ij} = \int_0^1 A(\phi_i)\phi_j\ dx = -\int_0^1 \frac{d^2\phi_i}{dx^2}\phi_j\ dx \tag{2b}$$

Using the approximation functions $\phi_1 = 3x - 2x^2$ and $\phi_2 = 4x^2 - 3x^3$, we have $A(\phi_1) = 4$ and $A(\phi_2) = -4 + 12x$, and

$$K_{11} = 16, \quad K_{12} = K_{21} = 8, \quad K_{22} = 16,$$
$$M_{11} = \frac{10}{3}, \quad M_{12} = \frac{8}{3}, \quad M_{21} = \frac{8}{3}, \quad M_{22} = \frac{38}{15} \tag{3}$$

The characteristic polynomial and its roots are

$$48 - \frac{64}{5}\lambda + \frac{1}{3}\lambda^2 = 0 \ \text{ giving } \ \lambda_1 = 4.212, \ \lambda_2 = 34.188 \tag{4}$$

Problem 2.23: Repeat Problem 2.22 using the Ritz method.

Solution: A two-parameter Ritz approximation with

$$\phi_0 = 0, \quad \phi_1 = x, \quad \phi_2 = x^2 \tag{1}$$

yields

$$\begin{vmatrix} 2 - \frac{\lambda}{3} & 2 - \frac{\lambda}{4} \\ 2 - \frac{\lambda}{4} & \frac{7}{3} - \frac{\lambda}{5} \end{vmatrix} = 0 \tag{2}$$

or

$$15\lambda^2 - 640\lambda + 2400 = 0 \ \rightarrow \ \lambda_1 = 4.1545, \quad \lambda_2 = 38.512 \tag{3}$$

The exact values are

$$\lambda_1 = 4.116, \quad \lambda_2 = 24.139 \tag{4}$$

The weighted-residual solutions are more accurate than the Ritz solution because they use higher-order polynomials that satisfy all boundary conditions.

Problem 2.24: Consider the Laplace equation

$$-\nabla^2 u = 0, \quad 0 < x < 1, \quad 0 < y < \infty$$

$$u(0, y) = u(1, y) = 0 \quad \text{for} \quad y > 0$$

$$u(x, 0) = x(1 - x), \quad u(x, \infty) = 0, \quad 0 \le x \le 1$$

PROPRIETARY MATERIAL. ©The McGraw-Hill Companies, Inc. All rights reserved.

Assuming an approximation of the form

$$U_1(x, y) = c_1(y)x(1 - x)$$

find the differential equation for $c_1(y)$ and solve it exactly.

Solution: Substituting $U_1 = c_1(y)(x - x^2)$ into the differential equation, we obtain

$$\mathcal{R} = -\frac{d^2c_1}{dy^2}(x - x^2) + 2c_1$$

Using the Galerkin method, we obtain

$$0 = \int_0^1 \mathcal{R}(x - x^2)dx = -\frac{1}{30}\frac{d^2c_1}{dy^2} + \frac{1}{3}c_1$$

or

$$\frac{d^2c_1}{dy^2} - 10c_1 = 0 \text{ or } c_1 = Ae^{-\sqrt{10}y} + Be^{\sqrt{10}y}$$

The condition

$$u(x, 0) = x - x^2$$

imples that $c_1(0) = 1$. Also, the condition

$$u(x, \infty) = 0 \rightarrow c_1(\infty) = 0$$

These conditions give $B = 0$ and $A = 1$, and the solution becomes

$$U_1(x, y) = e^{-\sqrt{10}y}(x - x^2)$$

PROPRIETARY MATERIAL. ©The McGraw-Hill Companies, Inc. All rights reserved.

PROPRIETARY AND CONFIDENTIAL

This Manual is the proprietary property of The McGraw-Hill Companies, Inc. ("McGraw-Hill") and protected by copyright and other state and federal laws. By opening and using this Manual the user agrees to the following restrictions, and if the recipient does not agree to these restrictions, the Manual should be promptly returned unopened to McGraw-Hill: **This Manual is being provided only to authorized professors and instructors for use in preparing for the classes using the affiliated textbook. No other use or distribution of this Manual is permitted. This Manual may not be sold and may not be distributed to or used by any student or other third party. No part of this Manual may be reproduced, displayed or distributed in any form or by any means, electronic or otherwise, without the prior written permission of the McGraw-Hill.**

Chapter 3

SECOND-ORDER DIFFERENTIAL EQUATIONS IN ONE DIMENSION: FINITE ELEMENT MODELS

For Problems 3.1–3.4, carry out the following tasks:

(a) Develop the *weak forms* of the given differential equation(s) over a typical finite element, which is a geometric subdomain located between $x = x_a$ and $x = x_b$. Note that there are no "specified" boundary conditions at the element level. Therefore, in going from Step 2 to Step 3 of the weak-form development, one must identify the secondary variable(s) at the two ends of the domain by some symbols (like Q_1^e and Q_2^e for the first problem) and complete the weak form.

(b) Assume an approximation(s) of the form

$$u(x) = \sum_{j=1}^{n} u_j^e \psi_j^e(x) \qquad (i)$$

where u is a primary variable of the formulation and $\psi_j^e(x)$ are the interpolation functions, and u_j^e are the values of the primary variable(s) at the jth node of the element. Substitute the expression in (i) for the primary variable and ψ_i^e for the weight function into the weak form(s) and derive the finite element model. Be sure to define all coefficients of the model in terms of the problem data and ψ_i^e.

Problem 3.1: Develop the weak form and the finite element model of the following differential equation over an element:

$$-\frac{d}{dx}\left(a\frac{du}{dx}\right) + \frac{d^2}{dx^2}\left(b\frac{d^2u}{dx^2}\right) + cu = f \quad \text{for} \quad x_a < x < x_b$$

where a, b, c, and f are known functions of position x. Ensure that the element coefficient matrix $[K^e]$ is symmetric. What is the nature of the interpolation functions for the problem?

Solution: The second term must be integrated twice by parts while the first term once by parts to distribute the differentiation equally between the weight function w_i

PROPRIETARY MATERIAL. ©The McGraw-Hill Companies, Inc. All rights reserved.

and the solution u_h so that the resulting expression would be symmetric in w_i and u_h. The integration-by-parts gives rise to two pairs of primary and secondary variables. We have

$$0 = \int_{x_a}^{x_b} w_i(x) \left[-\frac{d}{dx}\left(a\frac{du_h}{dx}\right) + \frac{d^2}{dx^2}\left(b\frac{d^2u_h}{dx^2}\right) + cu_h - f \right] dx \tag{1}$$

$$= \int_{x_a}^{x_b} \left[\frac{dw_i}{dx}\left(a\frac{du_h}{dx}\right) - \frac{dw_i}{dx}\frac{d}{dx}\left(b\frac{d^2u_h}{dx^2}\right) + cw_iu_h - w_if \right] dx$$
$$+ \left[-w_i \cdot \left(a\frac{du_h}{dx}\right)\right]_{x_a}^{x_b} + \left[w_i \cdot \frac{d}{dx}\left(b\frac{d^2u_h}{dx^2}\right)\right]_{x_a}^{x_b}$$

$$= \int_{x_a}^{x_b} \left[\frac{dw_i}{dx}\left(a\frac{du_h}{dx}\right) - \frac{dw_i}{dx}\frac{d}{dx}\left(b\frac{d^2u_h}{dx^2}\right) + cw_iu_h - w_if \right] dx$$
$$+ \left\{ w_i \cdot \left[-a\frac{du_h}{dx} + \frac{d}{dx}\left(b\frac{d^2u_h}{dx^2}\right)\right]\right\}_{x_a}^{x_b} \tag{2a}$$

$$= \int_{x_a}^{x_b} \left[\frac{dw_i}{dx}\left(a\frac{du_h}{dx}\right) + \frac{d^2w_i}{dx^2}\left(b\frac{d^2u_h}{dx^2}\right) + cw_iu_h - w_if \right] dx$$
$$+ \left\{ w_i \cdot \left[-a\frac{du_h}{dx} + \frac{d}{dx}\left(b\frac{d^2u_h}{dx^2}\right)\right]\right\}_{x_a}^{x_b} + \left[\frac{dw_i}{dx} \cdot b\frac{d^2u_h}{dx^2}\right]_{x_a}^{x_b} \tag{2b}$$

From the boundary expressions of the last equation, we identify the primary and secondary variables. The secondary variables are the expressions next to the weight functions in the boundary terms:

$$\text{Secondary variables:} \quad \left[-a\frac{du_h}{dx} + \frac{d}{dx}\left(b\frac{d^2u_h}{dx^2}\right)\right] \quad \text{and} \quad b\frac{d^2u_h}{dx^2} \tag{2c}$$

The primary variables are identified by first listing the cofficients in the boundary expressions

$$w_i \quad \text{and} \quad \frac{dw_i}{dx} \tag{2d}$$

and then replace w_i with the variable of the differential equation u. Thus the primary variables

$$\text{Primary variables:} \quad u_h \quad \text{and} \quad \frac{du_h}{dx} \tag{2e}$$

Next, we denote the secondary variables at the ends of the element by some symbols. We shall define these quantities such that they all have the negative sign:

$$P_a = \left[-a\frac{du_h}{dx} + \frac{d}{dx}\left(b\frac{d^2u_h}{dx^2}\right)\right]_{x_a}, \quad P_b = -\left[-a\frac{du_h}{dx} + \frac{d}{dx}\left(b\frac{d^2u_h}{dx^2}\right)\right]_{x_b}$$
$$Q_a = \left[b\frac{d^2u_h}{dx^2}\right]_{x_a}, \qquad Q_b = -\left[b\frac{d^2u_h}{dx^2}\right]_{x_b} \tag{2d}$$

PROPRIETARY MATERIAL. ©The McGraw-Hill Companies, Inc. All rights reserved.

Finally, the weak form is given by Eq. (2b), with the definitions in Eq. (2d). We have

$$0 = \int_{x_a}^{x_b} \left(a\frac{dw_i}{dx}\frac{du_h}{dx} + b\frac{d^2w_i}{dx^2}\frac{d^2u_h}{dx^2} + cw_iu_h - w_if \right) dx$$
$$- P_aw_i(x_a) - P_bw_i(x_b) - Q_a\frac{dw_i}{dx}(x_a) - Q_b\frac{dw_i}{dx}(x_b) \tag{3}$$

The primary variables include the dependent variable u and its derivative du_h/dx. As a rule, the primary variables must be continuous across elements. Therefore, the finite element interpolation be such that both of the variables are treated as nodal variables so that the continuity conditions can be used during the assembly elements. Thus an element with two nodes (which is the minimum) will have four unknowns (u and du/dx at each of the two ends of the element), requiring a four-term polynomial - a cubic

$$u_h(x) = c_1 + c_2x + c_3x^2 + c_4x^3 \tag{4}$$

The constants c_1 through c_4 can be expressed in terms of the nodal degrees of freedom

$$u_h(x_a) \equiv \Delta_1, \quad \left(\frac{du_h}{dx}\right)_{x_a} \equiv \Delta_2, \quad u_h(x_b) \equiv \Delta_3, \quad \left(\frac{du_h}{dx}\right)_{x_b} \equiv \Delta_4 \tag{5}$$

Thus we will have

$$\begin{aligned} u_h(x) &= c_1 + c_2x + c_3x^2 + c_4x^3 \\ &= \Delta_1\phi_1(x) + \Delta_2\phi_2(x) + \Delta_3\phi_3(x) + \Delta_4\phi_4(x) \\ &= \sum_{j=1}^{4} \Delta_j\phi_j(x) \end{aligned} \tag{6}$$

Note that Δ_1 and Δ_3 denote the values of the function u at the two nodes while Δ_2 and Δ_4 denote the values of derivative of u at the two nodes. The linear combination (6) of functions that interpolate both the function and its derivative(s) are known as the Hermite interpolation functions, and $\phi_j(x)$ are known as the *Hermite cubic interpolation functions*. See Chapter 5 for additional details.

The finite element model is obtained by substituting

$$u(x) \approx u_h^e(x) = \sum_{j=1}^{n} u_j^e\phi_j^e(x) \tag{7}$$

into the weak form (3). We obtain

$$[K^e]\{u^e\} = \{F^e\} \quad or \quad \mathbf{K}^e\mathbf{u}^e = \mathbf{F}^e \tag{8}$$

PROPRIETARY MATERIAL. ©The McGraw-Hill Companies, Inc. All rights reserved.

where

$$K_{ij}^e = \int_{x_a}^{x_b} \left(a\frac{d\phi_i}{dx}\frac{d\phi_j}{dx} + b\frac{d^2\phi_i}{dx^2}\frac{d^2\phi_j}{dx^2} + c\phi_i\phi_j \right) dx \tag{9a}$$

$$F_i = \int_{x_a}^{x_b} f\phi_i dx + P_a\phi_i(x_a) + P_b\phi_i(x_b) + Q_a\frac{d\phi_i}{dx}(x_a) + Q_b\frac{d\phi_i}{dx}(x_b) \tag{9b}$$

Problem 3.2: Construct the weak form and the finite element model of the differential equation

$$-\frac{d}{dx}\left(a\frac{du}{dx}\right) - b\frac{du}{dx} = f \quad \text{for} \quad 0 < x < L$$

over a typical element $\Omega_e = (x_a, x_b)$. Here a, b, and f are known functions of x, and u is the dependent variable. The natural boundary condition should *not* involve the function $b(x)$. What type of interpolation functions may be used for u?

Solution: The weak form over an element interval (x_a, x_b) is given by

$$0 = \int_{x_a}^{x_b} \left(a\frac{dw}{dx}\frac{du}{dx} - bw\frac{du}{dx} - wf \right) dx - Q_a w(x_a) - Q_b w(x_b) \tag{1}$$

where the term involving b is not integrated by parts because it does not reduce the differentiability required of the approximation functions. The finite element model is given by

$$[K^e]\{u^e\} = \{F^e\} \tag{2a}$$

where

$$K_{ij}^e = \int_{x_b}^{x_a} \left(a\frac{d\psi_i}{dx}\frac{d\psi_j}{dx} - b\ \psi_i\frac{d\psi_j}{dx} \right) dx$$

$$F_i^e = \int_{x_b}^{x_a} f\ \psi_i dx + Q_a\psi_i(x_a) + Q_b\psi_i(x_b) \tag{2b}$$

and ψ_i are the Lagrange interpolation functions. Note that the coefficient matrix is *not* symmetric.

Problem 3.3: Develop the weak forms of the following pair of coupled second-order differential equations over a typical element (x_a, x_b):

$$-\frac{d}{dx}\left[a(x)\left(u + \frac{dv}{dx}\right)\right] = f(x) \tag{1a}$$

$$-\frac{d}{dx}\left(b(x)\frac{du}{dx}\right) + a\left(u + \frac{dv}{dx}\right) = q(x) \tag{1b}$$

PROPRIETARY MATERIAL. ©The McGraw-Hill Companies, Inc. All rights reserved.

where u and v are the dependent varibales, a, b, f and q are known functions of x. Also identify the primary and secondary variables of the formulation.

Solution: Following the three-step procedure for each equation, we arrive at

$$\begin{aligned}
0 &= \int_{x_a}^{x_b} w_1 \left\{ -\frac{d}{dx}\left[a\left(u+\frac{dv}{dx}\right)\right] - f \right\} dx \\
&= \int_{x_a}^{x_b} \left[a\frac{dw_1}{dx}\left(u+\frac{dv}{dx}\right) - w_1 f \right] dx - \left[w_1 \cdot a\left(u+\frac{dv}{dx}\right)\right]_{x_a}^{x_b} \\
&= \int_{x_a}^{x_b} \left[a\frac{dw_1}{dx}\left(u+\frac{dv}{dx}\right) - w_1 f \right] dx - w_1(x_a)P_1 - w_1(x_b)P_2 \qquad (2a)
\end{aligned}$$

where

$$P_1 = -\left[a\left(u+\frac{dv}{dx}\right)\right]_{x_a}, \quad P_2 = \left[a\left(u+\frac{dv}{dx}\right)\right]_{x_b} \qquad (2b)$$

Similarly, we have

$$\begin{aligned}
0 &= \int_{x_a}^{x_b} w_2 \left[-\frac{d}{dx}\left(b\frac{du}{dx}\right) + a\left(u+\frac{dv}{dx}\right) - q \right] dx \\
&= \int_{x_a}^{x_b} \left[b\frac{dw_2}{dx}\frac{du}{dx} + aw_2\left(u+\frac{dv}{dx}\right) - q \right] dx - \left[w_2 \cdot b\frac{du}{dx}\right]_{x_a}^{x_b} \\
&= \int_{x_a}^{x_b} \left[b\frac{dw_2}{dx}\frac{du}{dx} + aw_2\left(u+\frac{dv}{dx}\right) - q \right] dx - w_2(x_a)Q_1 - w_2(x_b)Q_2 \qquad (3a)
\end{aligned}$$

where

$$Q_1 = -\left[b\frac{du}{dx}\right]_{x_a}, \quad Q_2 = \left[b\frac{du}{dx}\right]_{x_b} \qquad (3b)$$

New Problem 3.1: Consider the following differential equations governing bending of a beam using the Euler–Bernoulli beam theory:

$$-\frac{d^2w}{dx^2} - \frac{M}{EI} = 0, \qquad -\frac{d^2M}{dx^2} = q \qquad (1)$$

where w denotes the transverse deflection, M the bending moment and q the distributed transverse load. Develop the weak forms of the above pair of coupled second-order differential equations over a typical element (x_a, x_b). Also identify the primary and secondary variables of the formulation. *Caution:* Do not eliminate M from the equations; treat both w and M as independent unknowns.

Solution: Following the three-step procedure of developing weak forms, we obtain

$$0 = \int_{x_a}^{x_b} \left(\frac{dv_1}{dx}\frac{dM}{dx} - v_1 q \right) dx - v_1(x_a)\bar{Q}_1 - v_1(x_b)\bar{Q}_2, \qquad (2a)$$

$$0 = \int_{x_a}^{x_b} \left(\frac{dv_2}{dx}\frac{dw_0}{dx} - v_2\frac{M}{EI} \right) dx - v_2(x_a)\Theta_1 - v_2(x_b)\Theta_2 \qquad (2b)$$

PROPRIETARY MATERIAL. ©The McGraw-Hill Companies, Inc. All rights reserved.

where (v_1, v_2) are the weight functions (that have the interpretation of virtual deflection δw_0 and virtual moment δM, respectively), and

$$\bar{Q}_1 = -\left(\frac{dM}{dx}\right)_{x=x_a}, \quad \bar{Q}_2 = \left(\frac{dM}{dx}\right)_{x=x_b} \tag{3a}$$

$$\Theta_1 = \left(-\frac{dw_0}{dx}\right)_{x=x_a}, \quad \Theta_2 = \left(-\frac{dw_0}{dx}\right)_{x=x_b} \tag{3b}$$

Problem 3.4: Consider the following weak forms of a pair of coupled differential equations:

$$0 = \int_{x_a}^{x_b} \left(\frac{dw_1}{dx}\frac{dv}{dx} - w_1 f\right) dx - P_a w_1(x_a) - P_b w_1(x_b) \tag{1a}$$

$$0 = \int_{x_a}^{x_b} \left(\frac{dw_2}{dx}\frac{du}{dx} + c\, w_2 v - w_2 q\right) dx - Q_a w_2(x_a) - Q_b w_2(x_b) \tag{1b}$$

where $c(x)$ is a known function, w_1 and w_2 are weight functions, u and v are dependent variables (primary variables), and P_a, P_b, Q_a, and Q_b are the secondary variables of the formulation. Use the finite element approximations of the form

$$u(x) = \sum_{j=1}^{m} u_j^e \psi_j^e(x)\ , \quad v(x) = \sum_{j=1}^{n} v_j^e \varphi_j^e(x) \tag{2}$$

and $w_1 = \psi_i$ and $w_2 = \varphi_i$ and derive the finite element equations from the weak forms. The finite element equations should be in the form

$$0 = \sum_{j=1}^{m} K_{ij}^{11} u_j^e + \sum_{j=1}^{n} K_{ij}^{12} v_j^e - F_i^1 \tag{3a}$$

$$0 = \sum_{j=1}^{m} K_{ij}^{21} u_j^e + \sum_{j=1}^{n} K_{ij}^{22} v_j^e - F_i^2 \tag{3b}$$

Define the coefficients K_{ij}^{11}, K_{ij}^{12}, K_{ij}^{21}, K_{ij}^{22}, F_i^1, and F_i^2 in terms of the interpolation functions, known data, and secondary variables.

Solution: Substitution of the finite element approximation (2) into the weak forms gives

$$\begin{aligned} 0 &= \int_{x_a}^{x_b} \left[\frac{d\psi_i}{dx}\left(\sum_{j=1}^{n} v_j^e \frac{d\varphi_j}{dx}\right) - \psi_i f\right] dx - P_a \psi_i(x_a) - P_b \psi_i(x_b) \\ &= \sum_{j=1}^{n} A_{ij}^e v_j^e - F_i^e \end{aligned} \tag{4a}$$

PROPRIETARY MATERIAL. ©The McGraw-Hill Companies, Inc. All rights reserved.

where

$$A_{ij}^e = \int_{x_a}^{x_b} \frac{d\psi_i}{dx}\frac{d\varphi_j}{dx}\ dx, \quad F_i^e = \int_{x_a}^{x_b} \psi_i f\ dx + P_a\psi_i(x_a) + P_b\psi_i(x_b) \tag{4b}$$

and

$$\begin{aligned} 0 &= \int_{x_a}^{x_b} \left[\frac{d\varphi_i}{dx}\left(\sum_{j=1}^m u_j^e \frac{d\psi_j}{dx}\right) + c\ \varphi_i \left(\sum_{j=1}^n v_j^e \varphi_j\right) - q\varphi_i \right] dx \\ &\quad - Q_a\varphi_i(x_a) - Q_b\varphi_i(x_b) \\ &= \sum_{j=1}^m B_{ij}^e u_j^e + \sum_{j=1}^n C_{ij}^e v_j^e - G_i^e \end{aligned} \tag{5a}$$

where

$$\begin{aligned} B_{ij}^e &= \int_{x_a}^{x_b} \frac{d\varphi_i}{dx}\frac{d\psi_j}{dx}\ dx = A_{ji}^e \\ C_{ij}^e &= \int_{x_a}^{x_b} c\,\varphi_i\varphi_j\ dx \\ G_i^e &= \int_{x_a}^{x_b} q\varphi_i\ dx + Q_a\varphi_i(x_a) + Q_b\varphi_i(x_b) \end{aligned} \tag{5b}$$

Comparing with the given expressions in (3a,b), it is clear that

$$K_{ij}^{11} = 0, \quad A_{ij}^e = K_{ij}^{12}, \quad B_{ij}^e = K_{ij}^{21}, \quad C_{ij}^e = K_{ij}^{22}, \quad F_i^e = F_i^1, \quad G_i^e = F_i^2 \tag{6}$$

New Problem 3.2: Develop the weighted-residual finite element model (*not* weak-form finite element model) of the following pair of equations:

$$-\frac{d^2w_0}{dx^2} - \frac{M}{EI} = 0, \qquad -\frac{d^2M}{dx^2} = q \tag{1}$$

Assume the following approximations of the form

$$w_0(x) \approx \sum_{i=1}^4 \Delta_i\varphi_i^{(1)}(x), \quad M(x) \approx \sum_{i=1}^4 \Lambda_i\varphi_i^{(2)}(x), \tag{2}$$

The finite element equations should be in the form

$$0 = \sum_{j=1}^m K_{ij}^{11}\Delta_j^e + \sum_{j=1}^n K_{ij}^{12}\Lambda_j^e - F_i^1 \tag{3a}$$

$$0 = \sum_{j=1}^m K_{ij}^{21}\Delta_j^e + \sum_{j=1}^n K_{ij}^{22}\Lambda_j^e - F_i^2 \tag{3b}$$

PROPRIETARY MATERIAL. ©The McGraw-Hill Companies, Inc. All rights reserved.

(a) Define the coefficients K_{ij}^{11}, K_{ij}^{12}, K_{ij}^{21}, K_{ij}^{22}, F_i^1, and F_i^2 in terms of the interpolation functions, known data, and secondary variables, and (b) comment on the choice of the interpolation functions (what type, Lagrange or Hermite, and why).

Solution: The weighted-residual statements of Eqs. (1) are

$$0 = \int_{x_a}^{x_b} v_1 \left(-\frac{d^2 w_0}{dx^2} - \frac{M}{EI} \right) dx, \quad 0 = \int_{x_a}^{x_b} v_2 \left(-\frac{d^2 M}{dx^2} - q \right) dx \tag{4}$$

where (v_1, v_2) are the weight functions. A close examination of the above statements indicate that $v_1 \sim M$ and $v_2 \sim w_0$ (i.e., $v_2 q_0$ must be work done; therefore, v_2 must be like w_0). Using approximations (1), we obtain the following Galerkin (i.e. $v_1 \sim \varphi_i^{(2)}$ and $v_2 \sim \varphi_i^{(1)}$) finite element model:

$$\begin{bmatrix} [0] & [A^e] \\ [B^e] & [D^e] \end{bmatrix} \begin{Bmatrix} \{\Delta^e\} \\ \{\Lambda^e\} \end{Bmatrix} = \begin{Bmatrix} \{f^e\} \\ \{0\} \end{Bmatrix} \tag{5}$$

where ($[K^{11}] = [0]$, $[K^{12}] = [A]$, $[K^{21}] = [B]$, $[K^{22}] = [C]$, $\{F^1\} = \{f\}$, and $\{F^2\} = \{0\}$)

$$\begin{aligned} A_{ij}^e &= \int_{x_a}^{x_b} \varphi_i^{(1)} \frac{d^2 \varphi_j^{(2)}}{dx^2} dx, \qquad f_i^e = -\int_{x_a}^{x_b} q \varphi_i^{(1)} \, dx \\ B_{ij}^e &= \int_{x_a}^{x_b} \varphi_i^{(2)} \frac{d^2 \varphi_j^{(1)}}{dx^2} \, dx, \quad D_{ij}^e = \int_{x_a}^{x_b} \varphi_i^{(2)} \varphi_j^{(2)} \, dx \end{aligned} \tag{6}$$

Note that Hermite cubic interpolations of both w_0 and M are implied by Eq. (4a,b), and $\varphi_i^{(1)} = \varphi_i^{(2)}$. The coefficient matrix in Eq. (5) is *not* symmetric.

New Problem 3.3: Suppose that the *1–D Lagrange cubic element with equally spaced nodes* has a source of $f(x) = f_0 x/h$. Compute its contribution to node 2.

Solution: The contribution can be calculated using the equation

$$f_2^e = \int_0^h f(x) \psi_2^e(x) \, dx$$

Thus, first we need to determine ψ_2 of the element. Since ψ_2 must vanish at $x = 0$, $x = 2h/3$, and $x = h$, we can write

$$\psi_2^e(x) = C(x - 0)(x - \frac{2h}{3})(x - h), \quad \psi_2^e(h/3) = 1 \text{ gives } C = \frac{27}{2h^3}$$

PROPRIETARY MATERIAL. ©The McGraw-Hill Companies, Inc. All rights reserved.

Then

$$
\begin{aligned}
f_2^e =& \frac{27 f_0}{2h^4} \int_0^h x^2 \left(x - \frac{2h}{3} \right) (x-h) dx \\
=& \frac{27 f_0}{2h^4} \int_0^h \left(x^4 - \frac{5}{3} h x^3 + \frac{2}{3} h^2 x^2 \right) dx \\
=& \left(\frac{27 f_0}{2h^4} \right) \frac{h^5}{180} = \frac{3}{40} f_0 h
\end{aligned}
$$

Problem 3.5: Derive the Lagrange cubic interpolation functions for a four-node (one-dimensional) element (with equally spaced nodes) using the alternative procedure based on interpolation properties (3.2.18a,b). Use the local coordinate $\bar{x}$ for simplicity.

Solution: The Lagrange interpolation function for node 1 of a cubic element with equally-spaced nodes should be of the form, because it must vanish at $\bar{x} = h/3$, $\bar{x} = 2h/3$ and $\bar{x} = h$, where $\bar{x}$ is the local coordinate with the origin at node 1,

$$\psi_1(\bar{x}) = c_1(\bar{x} - \frac{h}{3})(\bar{x} - \frac{2h}{3})(\bar{x} - h) \tag{1}$$

where c_1 is an arbitrary constant, which can be determined by requiring that ψ_1 take the value of unity at node 1, i.e., $\bar{x} = 0$:

$$\psi_1(0) = 1 \rightarrow c_1 = -\frac{9}{2h^3} \tag{2}$$

Thus we have

$$\psi_1(\bar{x}) = \left(1 - \frac{3\bar{x}}{h}\right)\left(1 - \frac{3\bar{x}}{2h}\right)\left(1 - \frac{\bar{x}}{h}\right) \tag{3}$$

Similarly, the Lagrange interpolation function for node 2 of a cubic element with equally-spaced nodes should be of the form, because it must vanish at $\bar{x} = 0$, $\bar{x} = 2h/3$ and $\bar{x} = h$, where $\bar{x}$ is the local coordinate with the origin at node 1,

$$\psi_2(\bar{x}) = c_2(\bar{x} - 0)(\bar{x} - \frac{2h}{3})(\bar{x} - h) \tag{4}$$

The constant c_2 is determined from the condition that $\psi_2(h/3) = 1$: $c_2 = \frac{27}{2h^3}$. Thus, we have

$$\psi_2(\bar{x}) = 9\frac{\bar{x}}{h}\left(1 - \frac{3\bar{x}}{2h}\right)\left(1 - \frac{\bar{x}}{h}\right) \tag{5}$$

Other functions can be derived in a similar fashion.

PROPRIETARY MATERIAL. ©The McGraw-Hill Companies, Inc. All rights reserved.

Problem 3.6: Evaluate the element matrices $[K^{11}]$, $[K^{12}]$, and $[K^{22}]$ for the linear interpolation of $u(x)$ and $v(x)$ in Problem 3.4.

Solution: By inspection and the results available in the book for linear interpolation functions ($\varphi_i(x) = \psi_i x$)), we have $[K^{11}] = [0]$ and

$$[K^{12}] = [K^{21}] = \frac{1}{h_e}\begin{bmatrix} 1 & -1 \\ -1 & 1 \end{bmatrix}; \quad [K^{22}] = \frac{c_1^e h_e}{6}\begin{bmatrix} 2 & 1 \\ 1 & 2 \end{bmatrix}$$

Problem 3.7: Evaluate the following coefficient matrices and source vector using the linear Lagrange interpolation functions:

$$\begin{aligned} K_{ij}^e &= \int_{x_a}^{x_b} (a_0^e + a_1^e x)\frac{d\psi_i^e}{dx}\frac{d\psi_j^e}{dx}dx \\ M_{ij}^e &= \int_{x_a}^{x_b} (c_0^e + c_1^e x)\psi_i^e \psi_j^e dx \\ f_i^e &= \int_{x_a}^{x_b} (f_0^e + f_1^e x)\psi_i^e dx \end{aligned}$$

where a_0^e, a_1^e, c_0^e, c_1^e, f_0^e, and f_1^e are constants.

Solution: We have

$$\begin{aligned} [K^e] &= \frac{a_0^e}{h_e}\begin{bmatrix} 1 & -1 \\ -1 & 1 \end{bmatrix} + \frac{a_1^e}{h_e}\left(\frac{x_a + x_b}{2}\right)\begin{bmatrix} 1 & -1 \\ -1 & 1 \end{bmatrix} \\ [M^e] &= \frac{c_0^e h_e}{6}\begin{bmatrix} 2 & 1 \\ 1 & 2 \end{bmatrix} + \frac{c_1^e h_e}{12}\left(x_a\begin{bmatrix} 4 & 2 \\ 2 & 4 \end{bmatrix} + h_e\begin{bmatrix} 1 & 1 \\ 1 & 3 \end{bmatrix}\right) \\ \{f^e\} &= \frac{q_0^e h_e}{2}\begin{Bmatrix} 1 \\ 1 \end{Bmatrix} + \frac{q_1^e h_e}{6}\left(x_a\begin{Bmatrix} 3 \\ 3 \end{Bmatrix} + h_e\begin{Bmatrix} 1 \\ 2 \end{Bmatrix}\right) \end{aligned}$$

Problem 3.8: (*Heat transfer in a rod*) The governing differential equation and convection boundary condition are of the form:

$$-\frac{d^2\theta}{dx^2} + c\theta = 0, \quad 0 < x < L \tag{1}$$

$$\theta(0) = T_0 - T_\infty, \quad \left[k\frac{d\theta}{dx} + \beta\theta\right]_{x=L} = 0 \tag{2}$$

where $\theta = T - T_\infty$, $c = \beta P/(Ak)$, β is the heat transfer coefficient, P is the perimeter, A is the area of cross section, and k is the conductivity. For a mesh of two linear elements (of equal length), give (a) the boundary conditions on the nodal variables (primary as well as secondary variables) and (b) the final condensed finite element equations for the unknowns (both primary and secondary nodal variables). Use the

PROPRIETARY MATERIAL. ©The McGraw-Hill Companies, Inc. All rights reserved.

following data: $T_0 = 120°$ C, $T_\infty = 20°$ C, $L = 0.25$ m, $c = 256$, $\beta = 64$, and $k = 50$ (with proper units).

Solution: For two linear elements, we have ($h = L/2$)

$$\left(\frac{1}{h}\begin{bmatrix} 1 & -1 & 0 \\ -1 & 2 & -1 \\ 0 & -1 & 1 \end{bmatrix} + \frac{ch}{6}\begin{bmatrix} 2 & 1 & 0 \\ 1 & 4 & 1 \\ 0 & 1 & 2 \end{bmatrix}\right)\begin{Bmatrix} U_1 \\ U_2 \\ U_3 \end{Bmatrix} = \begin{Bmatrix} Q_1^1 \\ Q_2^1 + Q_1^2 \\ Q_2^2 \end{Bmatrix}$$

with

$$U_1 = 100, \quad Q_2^1 + Q_1^2 = 0, \quad Q_2^2 = -\frac{\beta}{k}U_3$$

Hence, the condensed equations are

$$\left(\frac{1}{h}\begin{bmatrix} 2 & -1 \\ -1 & 1 + \frac{\beta h}{k} \end{bmatrix} + \frac{ch}{6}\begin{bmatrix} 4 & 1 \\ 1 & 2 \end{bmatrix}\right)\begin{Bmatrix} U_2 \\ U_3 \end{Bmatrix} = \begin{Bmatrix} (\frac{1}{h} - \frac{ch}{6})U_1 \\ 0 \end{Bmatrix}$$

$$Q_1^1 = \left(\frac{1}{h} + \frac{ch}{3}\right)U_1 + \left(-\frac{1}{h} + \frac{ch}{6}\right)U_2$$

Problem 3.9: (*Axial deformation of a bar*) The governing differential equation is of the form (E and A are constant):

$$-\frac{d}{dx}\left[EA\frac{du}{dx}\right] = 0, \quad 0 < x < L \tag{1}$$

For the minimum number of linear elements, give (a) the boundary conditions on the nodal variables (primary as well as secondary variables) and (b) the final condensed finite element equations for the unknowns.

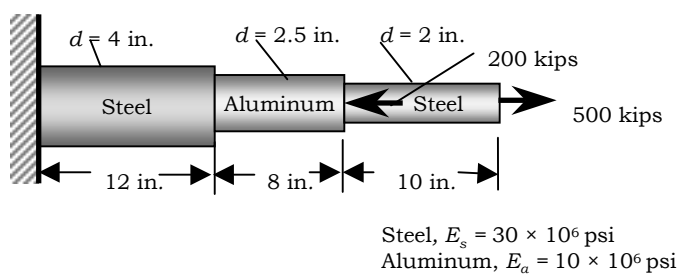

Figure P3.9

Solution: For three linear elements, we have ($E_1 = E_3 = E_s$ and $E_2 = E_a$)

$$\begin{bmatrix} \frac{E_sA_1}{h_1} & -\frac{E_sA_1}{h_1} & 0 & 0 \\ -\frac{E_sA_1}{h_1} & \frac{E_sA_1}{h_1} + \frac{E_aA_2}{h_2} & -\frac{E_aA_2}{h_2} & 0 \\ 0 & -\frac{E_aA_2}{h_2} & \frac{E_aA_2}{h_2} + \frac{E_sA_3}{h_3} & -\frac{E_sA_3}{h_3} \\ 0 & 0 & -\frac{E_sA_3}{h_3} & \frac{E_sA_3}{h_3} \end{bmatrix}\begin{Bmatrix} U_1 \\ U_2 \\ U_3 \\ U_4 \end{Bmatrix} = \begin{Bmatrix} Q_1^1 \\ Q_2^1 + Q_1^2 \\ Q_2^2 + Q_1^3 \\ Q_2^3 \end{Bmatrix}$$

PROPRIETARY MATERIAL. ©The McGraw-Hill Companies, Inc. All rights reserved.

with

$$h_1 = 12, \quad h_2 = 8, \quad h_3 = 10, \quad A_1 = \frac{\pi(4)^2}{4}, \quad A_2 = \frac{\pi(2.5)^2}{4}, \quad A_3 = \frac{\pi(2)^2}{4}$$

$$U_1 = 0, \quad Q_2^1 + Q_1^2 = 0, \quad Q_2^2 + Q_1^3 = -200, \quad Q_2^3 = 500$$

Hence, the condensed equations are

$$\begin{bmatrix} \frac{E_sA_1}{h_1} + \frac{E_aA_2}{h_2} & -\frac{E_aA_2}{h_2} & 0 \\ -\frac{E_aA_2}{h_2} & \frac{E_aA_2}{h_2} + \frac{E_sA_3}{h_3} & -\frac{E_sA_3}{h_3} \\ 0 & -\frac{E_sA_3}{h_3} & \frac{E_sA_3}{h_3} \end{bmatrix} \begin{Bmatrix} U_2 \\ U_3 \\ U_4 \end{Bmatrix} = \begin{Bmatrix} 0 \\ -200 \\ 500 \end{Bmatrix}$$

$$Q_1^1 = -\frac{E_sA_1}{h_1} U_2$$

Problem 3.10: Re-solve the problem in Example 3.2.1 using the uniform mesh of three linear finite elements.

Solution: The coefficient matrix is defined by

$$K_{ij}^e = \int_{x_a}^{x_b} \left(\frac{d\psi_i^e}{dx} \frac{d\psi_j^e}{dx} - \psi_i^e \psi_j^e \right) dx$$

$$f_i^e = \int_{x_a}^{x_b} (-x^2) \psi_i^e \, dx \tag{1}$$

The element coefficient matrix (for any element) is given by Eq. (3.2.39), with $a_e = 1, \; c_e = -1, \; h_e = \frac{1}{3}$:

$$[K^e] = \frac{1}{18} \begin{bmatrix} 52 & -55 \\ -55 & 52 \end{bmatrix} \tag{2}$$

The coefficients f_i^e are evaluated as

$$f_1^e = -\frac{1}{h_e} \left[\frac{x_b}{3} \left(x_b^3 - x_a^3 \right) - \frac{1}{4} \left(x_b^4 - x_a^4 \right) \right]$$

$$f_2^e = -\frac{1}{h_e} \left[\frac{1}{4} \left(x_b^4 - x_a^4 \right) - \frac{x_a}{3} \left(x_b^3 - x_a^3 \right) \right] \tag{3}$$

Evaluating f_i^e for each element, we obtain

Element 1 ($h_1 = \frac{1}{3}, \; x_a = 0, x_b = h_1 = \frac{1}{3}$):

$$f_1^1 = -\frac{1}{324} = -0.003086, \quad f_2^1 = -\frac{3}{324} = -0.00926$$

PROPRIETARY MATERIAL. ©The McGraw-Hill Companies, Inc. All rights reserved.

Element 2 ($h_2 = \frac{1}{3},\ x_a = h_1 = \frac{1}{3},\ x_b = h_1 + h_2 = \frac{2}{3}$):

$$f_1^2 = -\frac{11}{324} = -0.03395, \quad f_2^2 = -\frac{17}{324} = -0.05247$$

Element 3 ($h_3 = \frac{1}{3},\ x_a = h_1 + h_2 = \frac{2}{3},\ x_b = h_1 + h_2 + h_3 = 1$):

$$f_1^3 = -\frac{33}{324} = -0.10185, \quad f_2^3 = -\frac{43}{324} = -0.13272$$

The assembled set of equations are

$$\frac{1}{18}\begin{bmatrix} 52 & -55 & 0 & 0 \\ -55 & 104 & -55 & 0 \\ 0 & -55 & 104 & -55 \\ 0 & 0 & -55 & 52 \end{bmatrix}\begin{Bmatrix} U_1 \\ U_2 \\ U_3 \\ U_4 \end{Bmatrix} = -\begin{Bmatrix} 0.00308 \\ 0.04321 \\ 0.15432 \\ 0.13272 \end{Bmatrix} + \begin{Bmatrix} Q_1^1 \\ Q_2^1 + Q_1^2 \\ Q_2^2 + Q_1^3 \\ Q_2^3 \end{Bmatrix} \tag{4}$$

Since $U_1 = 0$ and $U_4 = 0$, the condensed equations are obtained by omitting the first and fourth row and column of the assembled equations. The condensed equations are

$$\frac{1}{18}\begin{bmatrix} 104 & -55 \\ -55 & 104 \end{bmatrix}\begin{Bmatrix} U_2 \\ U_3 \end{Bmatrix} = -\begin{Bmatrix} 0.04321 \\ 0.15432 \end{Bmatrix} \tag{5}$$

The solution is

$$U_1 = 0.0,\ U_2 = -0.02999,\ U_3 = -0.04257,\ U_4 = 0.0$$

The secondary variables can be computed using either the definition or from the element equations. We have

$$\begin{aligned} (Q_1^1)_{def} &\equiv -\left(a\frac{du}{dx}\right)\bigg|_{x=0} \approx \frac{U_1 - U_2}{h} = 0.08998 \\ (Q_2^3)_{def} &\equiv \left(a\frac{du}{dx}\right)\bigg|_{x=1} \approx \frac{U_3 - U_2}{h} = 0.12771 \\ (Q_1^1)_{equil} &= K_{11}^1 U_1 + K_{12}^1 U_2 - f_1^1 = 0.09164 \\ (Q_2^3)_{equil} &= K_{21}^3 U_3 + K_{22}^3 U_4 - f_2^3 = 0.26280 \end{aligned} \tag{6}$$

Problem 3.11: Solve the differential equation in Example 3.2.1 for the mixed boundary conditions

$$u(0) = 0, \quad \left(\frac{du}{dx}\right)\bigg|_{x=1} = 1$$

PROPRIETARY MATERIAL. ©The McGraw-Hill Companies, Inc. All rights reserved.

Use the uniform mesh of three linear elements. The exact solution is

$$u(x) = 2\frac{\cos(1-x) - \sin x}{\cos(1)} + x^2 - 2$$

Solution: Use the calculations of Problem 3.10. The boundary conditions are $U_1 = 0$ and $Q_2^3 = 1$. Hence, the condensed equations are obtained by omitting the first row and column of the assembled equations

$$\frac{1}{18}\begin{bmatrix} 104 & -55 & 0 \\ -55 & 104 & -55 \\ 0 & -55 & 52 \end{bmatrix}\begin{Bmatrix} U_2 \\ U_3 \\ U_4 \end{Bmatrix} = \begin{Bmatrix} -0.04321 \\ -0.15432 \\ 0.86728 \end{Bmatrix}$$

The solution is given by

$$U_1 = 0.0,\ U_2 = 0.4134,\ U_3 = 0.7958,\ U_4 = 1.1420$$

The secondary variables can be computed using either the definition or from the element equations. We have

$$\begin{aligned} (Q_1^1)_{def} &= -\frac{U_2 - U_1}{h} = -1.2402 \\ (Q_1^1)_{equil} &= 2.8889U_1 - 3.0555U_2 + 0.00308 = -1.2662 \end{aligned}$$

Problem 3.12: Solve the differential equation in Example 3.2.1 for the *natural* (or Neumann) boundary conditions

$$\left(\frac{du}{dx}\right)\bigg|_{x=0} = 1, \quad \left(\frac{du}{dx}\right)\bigg|_{x=1} = 0$$

Use the uniform mesh of three linear finite elements to solve the problem. Verify your solution with the analytical solution

$$u(x) = \frac{\cos(1-x) + 2\cos x}{\sin(1)} + x^2 - 2$$

Solution: Use the results of Example 3.2.1. The boundary conditions are $Q_1^1 = -1$ and $Q_2^3 = 0$. The assembled matrix equations (4) of Problem 3.10 are solved for the four nodal values

$$\frac{1}{18}\begin{bmatrix} 52 & -55 & 0 & 0 \\ -55 & 104 & -55 & 0 \\ 0 & -55 & 104 & -55 \\ 0 & 0 & -55 & 52 \end{bmatrix}\begin{Bmatrix} U_1 \\ U_2 \\ U_3 \\ U_4 \end{Bmatrix} = -\begin{Bmatrix} 1.00308 \\ 0.04321 \\ 0.15432 \\ 0.13272 \end{Bmatrix}$$

PROPRIETARY MATERIAL. ©The McGraw-Hill Companies, Inc. All rights reserved.

We obtain (with the help of a computer)

$$U_1 = 1.0280,\ U_2 = 1.3002,\ U_3 = 1.4447,\ U_4 = 1.4821$$

Problem 3.13: Solve the problem described by the following equations

$$-\frac{d^2u}{dx^2} = \cos \pi x, \quad 0 < x < 1; \quad u(0) = 0, \quad u(1) = 0$$

Use the uniform mesh of three linear elements to solve the problem and compare against the exact solution

$$u(x) = \frac{1}{\pi^2}\left(\cos \pi x + 2x - 1\right)$$

Solution: The main part of the problem is to compute the source vector for an element. We have

$$\begin{aligned}
f_i^e &= \int_{x_a}^{x_b} \cos \pi x\ \psi_i^e\ dx \\
f_1^e &= \int_{x_b}^{x_b} \cos \pi x \left(\frac{x_b - x}{h_e}\right) dx \\
&= \frac{1}{h_e}\left[\frac{x_b}{\pi}\sin \pi x - \left(\frac{1}{\pi^2}\cos \pi x + \frac{x}{\pi}\sin \pi x\right)\right]_{x_a}^{x_b} \\
&= -\frac{1}{\pi}\sin \pi x_a - \frac{1}{h_e \pi^2}\left(\cos \pi x_b - \cos \pi x_a\right) \\
f_2^e &= \int_{x_a}^{x_b} \cos \pi x \left(\frac{x - x_a}{h_e}\right) dx \\
&= \frac{1}{h_e \pi^2}\left(\cos \pi x_b - \cos \pi x_a\right) + \frac{1}{\pi}\sin \pi x_b
\end{aligned}$$

The element equations are

$$\begin{bmatrix} 3 & -3 \\ -3 & 3 \end{bmatrix} \begin{Bmatrix} u_1^e \\ u_2^e \end{Bmatrix} = \begin{Bmatrix} f_1^e \\ f_2^e \end{Bmatrix} + \begin{Bmatrix} Q_1^e \\ Q_2^e \end{Bmatrix}$$

with the element source terms are given as follows.

Element 1 ($x_a = 0$ and $x_b = h = 0.333333$):

$$\begin{aligned}
f_1^1 &= -\frac{1}{h\pi^2}\left(\cos \pi h - 1\right) = \frac{3}{2\pi^2} = 0.15198 \\
f_2^1 &= \frac{1}{h\pi^2}\left(\cos \pi h - 1\right) + \frac{1}{\pi}\sin \pi h = -\frac{3}{2\pi^2} + \frac{\sqrt{3}}{2\pi} = 0.12368
\end{aligned}$$

PROPRIETARY MATERIAL. ©The McGraw-Hill Companies, Inc. All rights reserved.

Element 2 ($x_a = h$ and $x_b = 2h$):

$$f_1^2 = -\frac{\sqrt{3}}{2\pi} + \frac{3}{\pi^2} = 0.02830$$
$$f_2^2 = -\frac{3}{\pi^2} + \frac{\sqrt{3}}{2\pi} = -0.02830$$

Element 3 ($x_a = 2h$ and $x_b = 3h = 1$):

$$f_1^3 = -\frac{\sqrt{3}}{2\pi} + \frac{3}{2\pi^2} = -0.12368, \quad f_2^3 = -\frac{3}{2\pi^2} = -0.15198$$

The assembled set of equations are

$$\begin{bmatrix} 3 & -3 & 0 & 0 & \\ -3 & 6 & -3 & 0 & \\ 0 & -3 & 6 & -3 & \\ & 0 & 0 & -3 & 3 \end{bmatrix} \begin{Bmatrix} U_1 \\ U_2 \\ U_3 \\ U_4 \end{Bmatrix} = \begin{Bmatrix} 0.15198 \\ 0.15198 \\ -0.15198 \\ -0.15198 \end{Bmatrix} + \begin{Bmatrix} Q_1^1 \\ 0 \\ 0 \\ Q_2^3 \end{Bmatrix}$$

and the condensed equations are

$$\begin{bmatrix} 6 & -3 \\ -3 & 6 \end{bmatrix} \begin{Bmatrix} U_2 \\ U_3 \end{Bmatrix} = \begin{Bmatrix} 0.15198 \\ -0.15198 \end{Bmatrix}$$

whose solution is

$$U_2 = 0.016887, \quad U_3 = -0.016887$$

The exact solution is the same as the finite element solution at the nodes.

Problem 3.14: Solve the differential equation in Problem 3.13 using the mixed boundary conditions

$$u(0) = 0, \quad \left(\frac{du}{dx}\right)\bigg|_{x=1} = 0$$

Use the uniform mesh of three linear elements to solve the problem and compare against the exact solution

$$u(x) = \frac{1}{\pi^2}(\cos \pi x - 1)$$

Solution: The boundary conditions require $U_1 = 0$ and $Q_2^3 = 0$. Hence, the condensed equations are

$$\begin{bmatrix} 6 & -3 & 0 \\ -3 & 6 & -3 \\ 0 & -3 & 3 \end{bmatrix} \begin{Bmatrix} U_2 \\ U_3 \\ U_4 \end{Bmatrix} = \begin{Bmatrix} 0.15198 \\ -0.15198 \\ -0.15198 \end{Bmatrix}$$

PROPRIETARY MATERIAL. ©The McGraw-Hill Companies, Inc. All rights reserved.

whose solution is

$$U_2 = -0.05066, \quad U_3 = -0.15198, \quad U_3 = -0.20264$$

Again, the exact solution is the same as the finite element solution at the nodes.

Problem 3.15: Solve the differential equation in Problem 3.13 using the Neumann boundary conditions

$$\left(\frac{du}{dx}\right)\bigg|_{x=0} = 0, \quad \left(\frac{du}{dx}\right)\bigg|_{x=1} = 0$$

Use the uniform mesh of three linear elements to solve the problem and compare against the exact solution

$$u(x) = \frac{\cos \pi x}{\pi^2}$$

Solution: For this case, the boundary conditions require $Q_1^1 = 0$ and $Q_2^3 = 0$. SInce none of the U_I are specified, the condensed equations are the same as the assembled equations. However, the coefficient matrix of the assembled equations is singular and the solution can be determined by specifying one of the U_I. Let $U_1 = 1/\pi^2$ (dictated by the known exact solution) and obtain the condensed equations

$$\begin{bmatrix} 6 & -3 & 0 \\ -3 & 6 & -3 \\ 0 & -3 & 3 \end{bmatrix} \begin{Bmatrix} U_2 \\ U_3 \\ U_4 \end{Bmatrix} = \begin{Bmatrix} 0.15198 + 0.30396 \\ -0.15198 \\ -0.15198 \end{Bmatrix}$$

Hence, the solution is

$$U_1 = 0.10132, \quad U_2 = 0.05066, \quad U_3 = -0.05066, \quad U_3 = -0.10132$$

which coincides with the exact solution at the nodes.

If we choose $U_1 = 0$, the solution we obtain is the same as that of Problem 3.14, and both problems have the same solution gradient, du/dx, as indicated by the exact solutions of the two problems.

PROPRIETARY MATERIAL. ©The McGraw-Hill Companies, Inc. All rights reserved.

PROPRIETARY AND CONFIDENTIAL

This Manual is the proprietary property of The McGraw-Hill Companies, Inc. ("McGraw-Hill") and protected by copyright and other state and federal laws. By opening and using this Manual the user agrees to the following restrictions, and if the recipient does not agree to these restrictions, the Manual should be promptly returned unopened to McGraw-Hill: **This Manual is being provided only to authorized professors and instructors for use in preparing for the classes using the affiliated textbook. No other use or distribution of this Manual is permitted. This Manual may not be sold and may not be distributed to or used by any student or other third party. No part of this Manual may be reproduced, displayed or distributed in any form or by any means, electronic or otherwise, without the prior written permission of the McGraw-Hill.**

Chapter 4

SECOND-ORDER DIFFERENTIAL EQUATIONS IN ONE DIMENSION: APPLICATIONS

Discrete Elements

Problem 4.1: Consider the system of linear elastic springs shown in Fig. P4.1. Assemble the element equations to obtain the force-displacement relations for the entire system. Use the boundary conditions to write the condensed equations for the unknown displacements and forces.

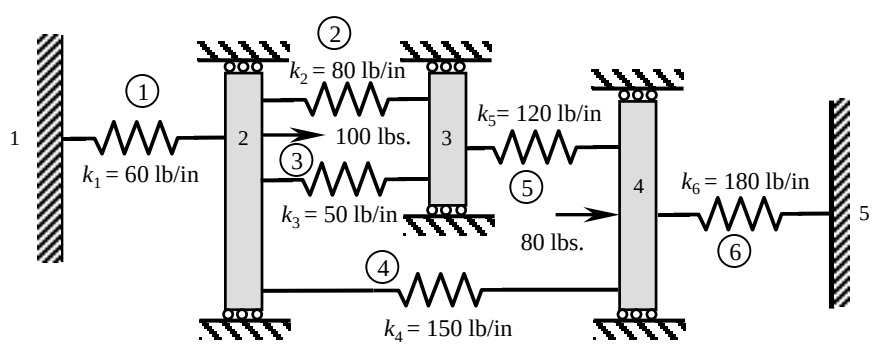

Fig. P4.1

Solution: The assembled matrix is

$$
[K] = \begin{array}{c} \begin{array}{ccccc} 1 & 2 & 3 & 4 & 5 \end{array} \\ \begin{bmatrix} k_1 & -k_1 & 0 & 0 & 0 \\ & k_1+k_2+k_3+k_4 & -k_2-k_3 & -k_4 & 0 \\ & & k_2+k_3+k_5 & -k_5 & 0 \\ & & & k_4+k_5+k_6 & -k_6 \\ \text{symm.} & & & & k_6 \end{bmatrix} \end{array} \begin{array}{c} \\ 1 \\ 2 \\ 3 \\ 4 \\ 5 \end{array}
$$

PROPRIETARY MATERIAL. ©The McGraw-Hill Companies, Inc. All rights reserved.

$$= \begin{bmatrix} 60 & -60 & 0 & 0 & 0 \\ & 340 & -180 & -150 & 0 \\ & & 300 & -270 & 0 \\ & & & 270 & -180 \\ \text{symm.} & & & & 180 \end{bmatrix}$$

The condensed equations for the unknown primary variables are

$$\begin{bmatrix} 340 & -180 & -150 \\ -180 & 300 & -270 \\ -150 & -270 & 270 \end{bmatrix} \begin{Bmatrix} U_2 \\ U_3 \\ U_4 \end{Bmatrix} = \begin{Bmatrix} 100 \\ 0 \\ 80 \end{Bmatrix}$$

and unknown secondary variables are $Q_1^1 = -k_1 U_2$ and $Q_2^6 = -k_6 U_5$.

Problem 4.2: Repeat Problem 4.1 for the system of linear springs shown in Fig. P4.2.

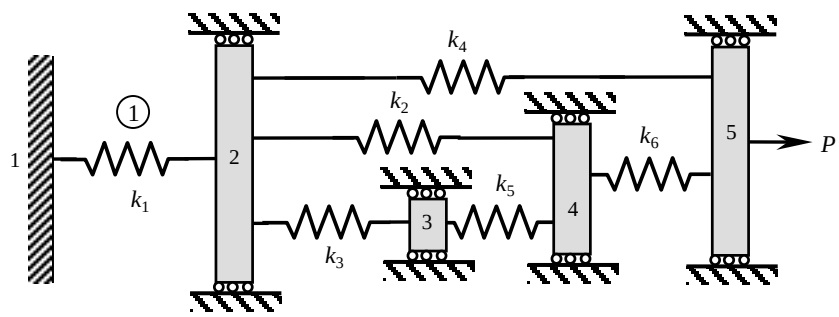

Fig. P4.2

Solution: The assembled stiffness matrix is

$$[K] = \begin{bmatrix} k_1 & -k_1 & 0 & 0 & 0 \\ -k_1 & k_1+k_2+k_3+k_4 & -k_3 & -k_2 & -k_4 \\ 0 & -k_3 & k_3+k_5 & -k_5 & 0 \\ 0 & -k_2 & -k_5 & k_2+k_5+k_6 & -k_6 \\ 0 & -k_4 & 0 & -k_6 & k_4+k_6 \end{bmatrix}$$

The boundary conditions are: $U_1 = 0$, $Q_2^6 + Q_2^4 = P$, and the equilibrium requires that the sums of all Q's be zero. Hence, the condensed set of equations is

$$\begin{bmatrix} k_1+k_2+k_3+k_4 & -k_3 & -k_2 & -k_4 \\ -k_3 & k_3+k_5 & -k_5 & 0 \\ -k_2 & -k_5 & k_2+k_5+k_6 & -k_6 \\ -k_4 & 0 & -k_6 & k_4+k_6 \end{bmatrix} \begin{Bmatrix} U_2 \\ U_3 \\ U_4 \\ U_5 \end{Bmatrix} = \begin{Bmatrix} 0 \\ 0 \\ 0 \\ P \end{Bmatrix}$$

PROPRIETARY MATERIAL. ©The McGraw-Hill Companies, Inc. All rights reserved.

Problem 4.3: Consider the direct current electric network shown in Fig. P4.3. We wish to determine the voltages V and currents I in the network using the finite element method. Set up the algebraic equations (i.e. condensed equations) for the unknown voltages and currents.

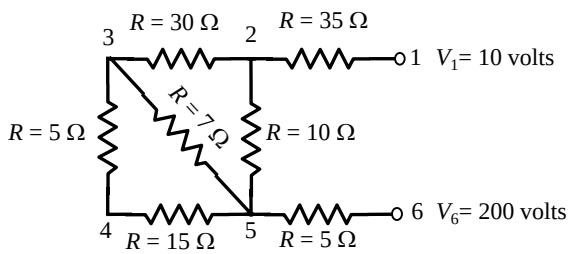

Fig. P4.3

Solution: The assembled coefficient matrix is

$$[K] = \begin{bmatrix} \frac{1}{35} & -\frac{1}{35} & 0 & 0 & 0 & 0 \\ -\frac{1}{35} & \frac{1}{35}+\frac{1}{30}+\frac{1}{10} & -\frac{1}{30} & 0 & -\frac{1}{10} & 0 \\ 0 & -\frac{1}{30} & \frac{1}{30}+\frac{1}{7}+\frac{1}{5} & -\frac{1}{5} & -\frac{1}{7} & 0 \\ 0 & 0 & -\frac{1}{5} & \frac{1}{5}+\frac{1}{15} & -\frac{1}{15} & 0 \\ 0 & -\frac{1}{10} & -\frac{1}{7} & -\frac{1}{15} & \frac{1}{10}+\frac{1}{7}+\frac{1}{15}+\frac{1}{5} & -\frac{1}{5} \\ 0 & 0 & 0 & 0 & -\frac{1}{5} & \frac{1}{5} \end{bmatrix}$$

The condensed equations are

$$\begin{bmatrix} \frac{1}{35}+\frac{1}{30}+\frac{1}{10} & -\frac{1}{30} & 0 & -\frac{1}{10} \\ -\frac{1}{30} & \frac{1}{30}+\frac{1}{7}+\frac{1}{5} & -\frac{1}{5} & -\frac{1}{7} \\ 0 & -\frac{1}{5} & \frac{1}{5}+\frac{1}{15} & -\frac{1}{15} \\ -\frac{1}{10} & -\frac{1}{7} & -\frac{1}{15} & \frac{1}{10}+\frac{1}{7}+\frac{1}{15}+\frac{1}{5} \end{bmatrix} \begin{Bmatrix} V_2 \\ V_3 \\ V_4 \\ V_5 \end{Bmatrix} = \begin{Bmatrix} \frac{10}{35} \\ 0 \\ 0 \\ \frac{200}{5} \end{Bmatrix}$$

$$I_1 = \frac{V_1 - V_2}{35}, \quad I_6 = \frac{V_5 - V_6}{5}$$

Problem 4.4: Repeat Problem 4.3 for the direct current electric network shown in Fig. P4.4.

PROPRIETARY MATERIAL. ©The McGraw-Hill Companies, Inc. All rights reserved.

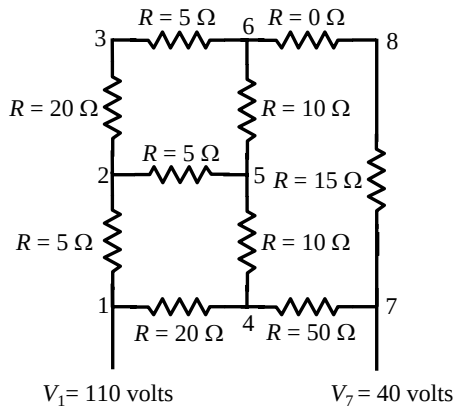

Fig. P4.4

Solution: The assembled coefficient matrix is

$$[K] = \begin{bmatrix} \frac{1}{5}+\frac{1}{20} & -\frac{1}{5} & 0 & -\frac{1}{20} & 0 & 0 & 0 \\ -\frac{1}{5} & \frac{1}{5}+\frac{1}{5}+\frac{1}{20} & -\frac{1}{20} & 0 & -\frac{1}{5} & 0 & 0 \\ 0 & -\frac{1}{20} & \frac{1}{20}+\frac{1}{5} & 0 & 0 & -\frac{1}{5} & 0 \\ -\frac{1}{20} & 0 & 0 & \frac{1}{20}+\frac{1}{10}+\frac{1}{50} & -\frac{1}{10} & -\frac{1}{10} & -\frac{1}{50} \\ 0 & -\frac{1}{5} & 0 & -\frac{1}{10} & \frac{1}{5}+\frac{1}{10}+\frac{1}{10} & 0 & 0 \\ 0 & 0 & -\frac{1}{5} & 0 & 0 & \frac{1}{5}+\frac{1}{10}+\frac{1}{15} & -\frac{1}{15} \\ 0 & 0 & 0 & -\frac{1}{50} & 0 & -\frac{1}{15} & \frac{1}{15}+\frac{1}{50} \end{bmatrix}$$

The condensed equations are

$$\begin{bmatrix} \frac{9}{20} & -\frac{1}{20} & 0 & -\frac{1}{5} & 0 \\ -\frac{1}{20} & \frac{1}{4} & 0 & 0 & -\frac{1}{5} \\ 0 & 0 & \frac{17}{100} & -\frac{1}{10} & 0 \\ -\frac{1}{5} & 0 & -\frac{1}{10} & \frac{2}{5} & -\frac{1}{10} \\ 0 & -\frac{1}{5} & 0 & -\frac{1}{10} & \frac{1}{5}+\frac{1}{10}+\frac{1}{15} \end{bmatrix} \begin{Bmatrix} V_2 \\ V_3 \\ V_4 \\ V_5 \\ V_6 \end{Bmatrix} = \begin{Bmatrix} \frac{110}{5} \\ 0 \\ \frac{110}{20}+\frac{40}{50} \\ 0 \\ \frac{40}{15} \end{Bmatrix}$$

$$I_1 = \frac{V_1 - V_2}{5} + \frac{V_1 - V_4}{20}, \quad I_7 = \frac{V_7 - V_6}{15} + \frac{V_7 - V_4}{50}$$

PROPRIETARY MATERIAL. ©The McGraw-Hill Companies, Inc. All rights reserved.

Problem 4.5: Write the condensed equations for the unknown pressures and flows (use the minimum number of elements) for the hydraulic pipe network shown in Fig. P4.5.

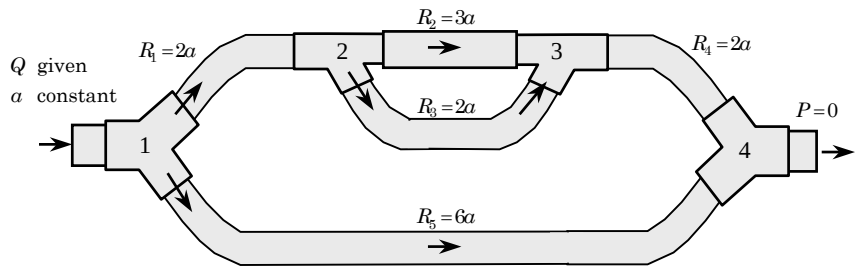

Fig. P4.5

Solution: The assembled system of equations for the pipe network are given by

$$\begin{bmatrix} (\frac{1}{2a}+\frac{1}{6a}) & -\frac{1}{2a} & 0 & -\frac{1}{6a} \\ -\frac{1}{2a} & (\frac{1}{2a}+\frac{1}{3a}+\frac{1}{2a}) & -(\frac{1}{3a}+\frac{1}{2a}) & 0 \\ 0 & -(\frac{1}{3a}+\frac{1}{2a}) & (\frac{1}{3a}+\frac{1}{2a}+\frac{1}{2a}) & -\frac{1}{2a} \\ -\frac{1}{6a} & 0 & -\frac{1}{2a} & (\frac{1}{2a}+\frac{1}{6a}) \end{bmatrix} \begin{Bmatrix} P_1 \\ P_2 \\ P_3 \\ P_4 \end{Bmatrix}$$

$$= \begin{Bmatrix} Q_1^1 + Q_1^5 \\ Q_2^1 + Q_1^2 + Q_1^3 \\ Q_2^2 + Q_2^3 + Q_1^4 \\ Q_2^4 + Q_2^5 \end{Bmatrix}$$

The boundary conditions are: $Q_1^1 + Q_1^5 = Q$, $P_4 = P$, and equilibrium requires that the sums of Q's be zero:

$$Q_2^1 + Q_1^2 + Q_1^3 = 0, \quad Q_2^2 + Q_2^3 + Q_1^4 = 0$$

The condensed equations are obtained by condensing variable P_4 out:

$$\frac{1}{6a}\begin{bmatrix} 4 & -3 & 0 \\ -3 & 8 & -5 \\ 0 & -5 & 8 \end{bmatrix} \begin{Bmatrix} P_1 \\ P_2 \\ P_3 \end{Bmatrix} = \begin{Bmatrix} Q \\ 0 \\ 0 \end{Bmatrix} + \begin{Bmatrix} \frac{1}{6a}\cdot P \\ 0 \cdot P \\ \frac{1}{2a}\cdot P \end{Bmatrix}$$

where $P = 0$. The solution of these equations is

$$P_1 = \frac{39}{14}Qa \ , \quad P_2 = \frac{12}{7}Qa \ , \quad P_3 = \frac{15}{14}Qa$$

PROPRIETARY MATERIAL. ©The McGraw-Hill Companies, Inc. All rights reserved.

Problem 4.6: Consider the hydraulic pipe network (the flow is assumed to be laminar) shown in Fig. P4.6. Write the condensed equations for the unknown pressures and flows (use the minimum number of elements.)

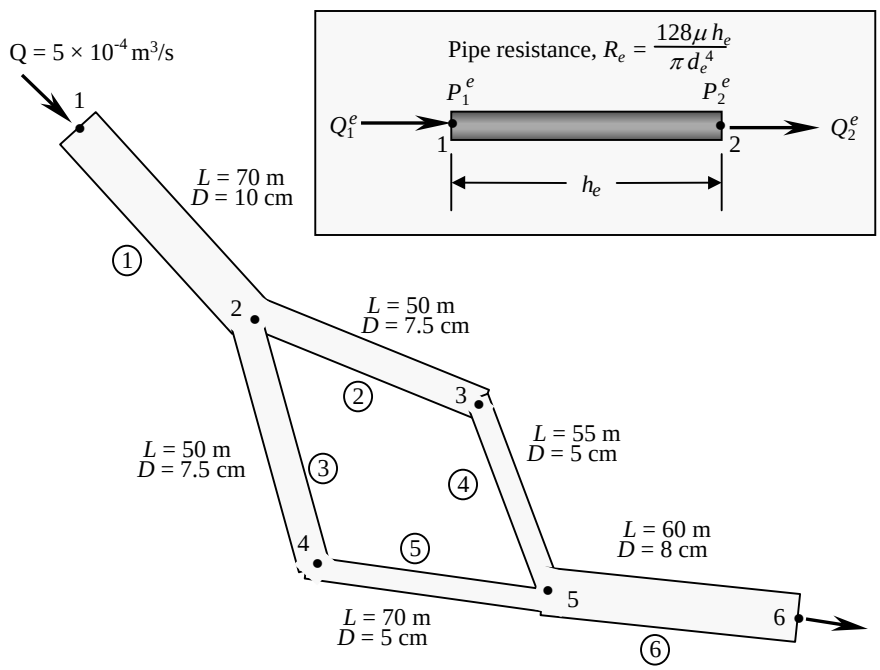

Fig. P4.6

Solution: The assembled equations are

$$\begin{bmatrix} \frac{1}{R_1} & -\frac{1}{R_1} & 0 & 0 & 0 & 0 \\ -\frac{1}{R_1} & \frac{1}{R_1}+\frac{1}{R_2}+\frac{1}{R_3} & -\frac{1}{R_2} & -\frac{1}{R_3} & 0 & 0 \\ 0 & -\frac{1}{R_2} & \frac{1}{R_2}+\frac{1}{R_4} & 0 & -\frac{1}{R_4} & 0 \\ 0 & -\frac{1}{R_3} & 0 & \frac{1}{R_3}+\frac{1}{R_5} & -\frac{1}{R_5} & 0 \\ 0 & 0 & -\frac{1}{R_4} & -\frac{1}{R_5} & \frac{1}{R_4}+\frac{1}{R_5}+\frac{1}{R_6} & -\frac{1}{R_6} \\ 0 & 0 & 0 & 0 & -\frac{1}{R_6} & \frac{1}{R_6} \end{bmatrix} \begin{Bmatrix} P_1 \\ P_2 \\ P_3 \\ P_4 \\ P_5 \\ P_6 \end{Bmatrix}$$

$$= \begin{Bmatrix} 5\times 10^{-4} \\ 0 \\ 0 \\ 0 \\ 0 \\ 5\times 10^{-4} \end{Bmatrix}$$

PROPRIETARY MATERIAL. ©The McGraw-Hill Companies, Inc. All rights reserved.

In order to eliminate the "rigid body" mode, we must set $P_6 = 0$ and solve the condensed equations obtained by deleting the last row and column of the assembled system.

Problem 4.7: Determine the maximum shear stresses in the solid steel ($G_s = 12$ msi) and aluminum ($G_a = 4$ msi) shafts shown in Fig. P4.7.

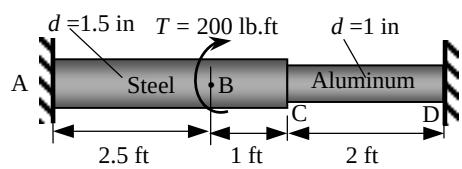

Fig. P4.7

Solution: The assembled system of equations for the three-element mesh is

$$\begin{bmatrix} k_1 & -k_1 & 0 & 0 \\ -k_1 & k_1+k_2 & -k_2 & 0 \\ 0 & -k_2 & k_2+k_3 & -k_3 \\ 0 & 0 & -k_3 & k_3 \end{bmatrix} \begin{Bmatrix} \theta_1 \\ \theta_2 \\ \theta_3 \\ \theta_4 \end{Bmatrix} = \begin{Bmatrix} T_1^1 \\ T_2^1 + T_1^2 \\ T_2^2 + T_1^3 \\ T_2^3 \end{Bmatrix}$$

where k_i are the shear stiffnesses $k_i = G_i J_i / h_i$ and $h_1 = 30$ in, $h_2 = 12$ in., and $h_3 = 24$ in. We have

$$k_1 = (12 \times 10^6)\frac{\pi(1.5)^4}{32}\frac{1}{2.5 \times 12} = 198,804 \text{ lb-in}$$
$$k_2 = (12 \times 10^6)\frac{\pi(1.5)^4}{32}\frac{1}{12} = 497,010 \text{ lb-in}$$
$$k_3 = (4 \times 10^6)\frac{\pi}{32}\frac{1}{2 \times 12} = 16,362 \text{ lb-in}$$

The boundary conditions are

$$\theta_1 = 0, \quad T_2^1 + T_1^2 = 200 \times 12 \text{ lb-in}, \quad T_2^2 + T_1^3 = 0, \quad \theta_4 = 0$$

The condensed equations are obtained by deleting the first equation and the last equation of the assembled system

$$10^3 \begin{bmatrix} 695.814 & -497.010 \\ -497.010 & 513.372 \end{bmatrix} \begin{Bmatrix} \theta_2 \\ \theta_3 \end{Bmatrix} = \begin{Bmatrix} 2,400 \\ 0 \end{Bmatrix}$$

Solving for the rotations θ_2 and θ_3, we obtain

$$\theta_2 = 0.011181 \text{ rad}, \quad \theta_3 = 0.010825 \text{ rad}$$

PROPRIETARY MATERIAL. ©The McGraw-Hill Companies, Inc. All rights reserved.

The torques at the fixed ends are calculated from the first and last equations of the assembled system

$$T_A = T_1^1 = -k_1\theta_2 = -(198,804)(0.011181) = -2222.83 \text{ lb-in}$$
$$T_D = T_2^3 = -k_3\theta_3 = -(16,362)(0.010825) = -177.12 \text{ lb-in}$$

The maximum stresses in the steel and aluminum shafts are

$$\tau_s = \frac{T_A r_s}{J_s} = \frac{2222.83 \times 0.75}{0.497} = 5,591 \text{ psi}$$
$$\tau_a = \frac{T_D r_a}{J_a} = \frac{177.12 \times 0.5}{0.0982} = 902 \text{ psi}$$

Problem 4.8: A steel ($G_s = 77$ GPa) shaft and an aluminum ($G_a = 27$ GPa) tube are connected to a fixed support and to a rigid disk, as shown in Fig. P4.8. If the torque applied at the end is equal to $T = 6,325$ N-m, determine the shear stresses in the steel shaft and aluminum tube.

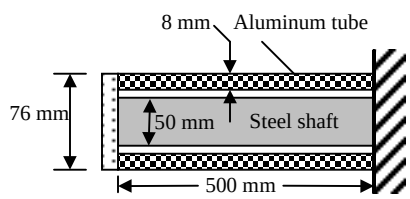

Fig. P4.8

Solution: The assembled system of equations for the two-element mesh is

$$\begin{bmatrix} k_1 + k_2 & -(k_1 + k_2) \\ -(k_1 + k_2) & k_1 + k_2 \end{bmatrix} \begin{Bmatrix} \theta_1 \\ \theta_2 \end{Bmatrix} = \begin{Bmatrix} T_1^1 + T_1^2 \\ T_2^1 + T_2^2 \end{Bmatrix}$$

where k_i are the shear stiffnesses $k_i = G_i J_i / h_i$ and $h_1 = h_2 = 500 \times 10^{-3}$ m. We have

$$k_1 = (27 \times 10^9) \frac{\pi\left((76)^4 - (60)^4\right) 10^{-12}}{32} \frac{1}{500 \times 10^{-3}} = 108,161 \text{ N-m}$$
$$k_2 = (77 \times 10^9) \frac{\pi (50)^4 \times 10^{-12}}{32} \frac{1}{500 \times 10^{-3}} = 94,493 \text{ N-m}$$

The boundary conditions are

$$\theta_1 = 0, \quad T_2^1 + T_2^2 = 6,325 \text{ N-m}$$

The condensed equations are

$$(108,161 + 94,493)\,\theta_2 = 6,325; \quad T_L = -\,(108,161 + 94,493)\,\theta_2 = -6,325$$

PROPRIETARY MATERIAL. ©The McGraw-Hill Companies, Inc. All rights reserved.

Solving for the rotation θ_2 of the right end relative to the left end, we obtain

$$\theta_2 = 0.0312 \text{ rad}$$

The stresses in the steel and aluminum shafts are

$$\tau_s = \frac{Tr_s}{J_s} = \frac{6,325 \times 25 \times 10^{-3}}{613,592 \times 10^{-12}} = 257.7 \text{ MPa}$$
$$\tau_a = \frac{Tr_a}{J_a} = \frac{6,325 \times 38 \times 10^{-3}}{2,002,979 \times 10^{-12}} = 120 \text{ MPa}$$

Heat Transfer

New Problem 4.1: *One-dimensional heat conduction/convection:*

$$-\frac{d}{dx}\left(a\frac{du}{dx}\right) + cu = q \quad \text{for} \quad 0 < x < L$$

$$\text{EBC:} \quad \text{specify } u, \quad \text{NBC:} \quad \text{specify } n_x a\frac{du}{dx} + \beta(u - u_\infty) = Q$$

where $n_x = -1$ at $x = x_a$ and $n_x = 1$ at $x = x_b$.

Solution: The three steps for the construction of weak form over an element are

$$\text{Step 1:} \quad 0 = \int_{x_a}^{x_b} w\left[-\frac{d}{dx}\left(a\frac{du}{dx}\right) + cu - q\right] dx \tag{1}$$

$$\begin{aligned}\text{Step 2:} \quad 0 &= \int_{x_a}^{x_b}\left(a\frac{dw}{dx}\frac{du}{dx} + cwu - wq\right) - w(x_a)\left[-a\frac{du}{dx}\right]_{x_a} - w(x_b)\left[a\frac{du}{dx}\right]_{x_b} \\ &= \int_{x_a}^{x_b}\left(a\frac{dw}{dx}\frac{du}{dx} + cwu - wq\right) - w(x_a)\left[Q_1 - \beta(u - u_\infty)\right]_{x_a} \\ &\quad - w(x_b)\left[Q_2 - \beta(u - u_\infty)\right]_{x_b}\end{aligned} \tag{2}$$

$$\begin{aligned}\text{Step 3:} \quad 0 &= \int_{x_a}^{x_b}\left(a\frac{dw}{dx}\frac{du}{dx} + cwu\right) dx - \int_{x_a}^{x_b} wq\, dx - w(x_a)Q_1 - w(x_b)Q_2 \\ &\quad + w(x_a)\beta_L\left[u(x_a) - u_\infty^L\right] + w(x_b)\beta_R\left[u(x_b) - u_\infty^R\right]\end{aligned} \tag{3}$$

Substituting the approximation

$$u(x) = \sum_{j=1}^{n} u_j^e \psi_j^e(x)$$

PROPRIETARY MATERIAL. ©The McGraw-Hill Companies, Inc. All rights reserved.

for u and ψ_i for w, we obtain

$$0 = \sum_{j=1}^{n} \left[\int_{x_a}^{x_b} \left(a \frac{d\psi_i}{dx} \frac{d\psi_j}{dx} + c\psi_i\psi_j \right) dx + \beta_L \psi_i(x_a)\psi_j(x_a) + \beta_R \psi_i(x_b)\psi_j(x_b) \right] u_j^e$$
$$- \int_{x_a}^{x_b} wq\, dx - \beta_L u_\infty^L \psi_i(x_a) - \beta_R u_\infty^R \psi_i(x_b) - \psi_i(x_a) Q_1 - \psi_i(x_b) Q_2 \tag{4a}$$
$$0 = \sum_{j=1}^{n} K_{ij}^e u_j^e - F_i^e \tag{4b}$$

where

$$K_{ij}^e = \int_{x_a}^{x_b} \left(a \frac{d\psi_i}{dx} \frac{d\psi_j}{dx} + c\psi_i\psi_j \right) dx + \beta_L \psi_i(x_a)\psi_j(x_a) + \beta_R \psi_i(x_b)\psi_j(x_b)$$
$$F_i^e = \int_{x_a}^{x_b} wq\, dx + \beta_L u_\infty^L \psi_i(x_a) + \beta_R u_\infty^R \psi_i(x_b) + \psi_i(x_a) Q_1 + \psi_i(x_b) Q_2 \tag{4c}$$

For example, for element-wise constant material and geometric properties and linear interpolation, we obtain

$$\left(\frac{a^e}{h_e} \begin{bmatrix} 1 & -1 \\ -1 & 1 \end{bmatrix} + \frac{c^e h_e}{6} \begin{bmatrix} 2 & 1 \\ 1 & 2 \end{bmatrix} + \begin{bmatrix} \beta_L & 0 \\ 0 & \beta_R \end{bmatrix} \right) \begin{Bmatrix} u_1^e \\ u_2^e \end{Bmatrix}$$
$$= \begin{Bmatrix} f_1^e \\ f_2^e \end{Bmatrix} + \begin{Bmatrix} Q_1^e \\ Q_2^e \end{Bmatrix} + \begin{Bmatrix} \beta_L u_\infty^L \\ \beta_R u_\infty^R \end{Bmatrix} \tag{5}$$

Problem 4.9: Consider heat transfer in a plane wall of total thickness L. The left surface is maintained at temperature T_0 and the right surface is exposed to ambient temperature T_∞ with heat transfer coefficient β. Determine the temperature distribution in the wall and heat input at the left surface of the wall for the following data: $L = 0.1$ m, $k = 0.01$ W/(m °C), $\beta = 25$ W/(m^2 °C), $T_0 = 50$°C, and $T_\infty = 5$°C. Solve for nodal temperatures and the heat at the left wall using (a) two linear finite elements and (b) one quadratic element.

Solution: (a) For a mesh of two linear finite elements ($h = h_1 = h_2 = L/2$), the assembled system of equations is

$$\frac{k}{h} \begin{bmatrix} 1 & -1 & 0 \\ -1 & 2 & -1 \\ 0 & -1 & 1 \end{bmatrix} \begin{Bmatrix} T_1 \\ T_2 \\ T_3 \end{Bmatrix} = \begin{Bmatrix} Q_1^1 \\ Q_2^1 + Q_1^2 \\ Q_2^2 \end{Bmatrix}$$

The boundary conditions are

$$T_1 = T_0, \quad Q_2^1 + Q_1^2 = 0, \quad Q_2^2 + \beta\,(T_3 - T_\infty) = 0$$

PROPRIETARY MATERIAL. ©The McGraw-Hill Companies, Inc. All rights reserved.

The condensed equations are

$$\begin{bmatrix} 0.4 & -0.2 \\ -0.2 & 25.2 \end{bmatrix} \begin{Bmatrix} T_2 \\ T_3 \end{Bmatrix} = \begin{Bmatrix} 10 \\ 125 \end{Bmatrix}$$

Solving for the nodal temperatures T_2 and T_3, we obtain

$$T_2 = 27.59^\circ \text{ C}, \quad T_3 = 5.18^\circ \text{ C}$$

The heat at the left end is calculated from the first equation of the assembled system

$$Q_1^1 = \frac{k}{h}(T_0 - T_2) = 4.48 \text{ W}$$

(a) For a mesh of one quadratic finite element ($h = L$), the system of equations is

$$\frac{k}{3h} \begin{bmatrix} 7 & -8 & 1 \\ -8 & 16 & -8 \\ 1 & -8 & 7 \end{bmatrix} \begin{Bmatrix} T_1 \\ T_2 \\ T_3 \end{Bmatrix} = \begin{Bmatrix} Q_1^1 \\ Q_2^1 \\ Q_3^1 \end{Bmatrix}$$

The boundary conditions are

$$T_1 = T_0, \quad Q_2^1 = 0, \quad Q_3^1 + \beta(T_3 - T_\infty) = 0$$

The condensed equations are

$$\begin{bmatrix} 0.53333 & -0.26667 \\ -0.26667 & 25.23333 \end{bmatrix} \begin{Bmatrix} T_2 \\ T_3 \end{Bmatrix} = \begin{Bmatrix} 13.3333 \\ 126.6667 \end{Bmatrix}$$

Solving for the nodal temperatures T_2 and T_3, we obtain

$$T_2 = 27.66^\circ \text{ C}, \quad T_3 = 5.31^\circ \text{ C}$$

The heat at the left end is calculated from the first equation of the system

$$Q_1^1 = \frac{k}{3h}(7T_0 - 8T_2 + T_3) = 4.47 \text{ W}$$

Problem 4.10: An insulating wall is constructed of three homogeneous layers with conductivities k_1, k_2, and k_3 in intimate contact (see Fig. P4.10). Under steady-state conditions, the temperatures of the media in contact at the left and right surfaces of the wall are at ambient temperatures of T_∞^L and T_∞^R, respectively, and film coefficients β_L and β_R, respectively. Determine the temperatures when the ambient temperatures T_0 and T_5 and the (surface) are known. Assume that there is no internal heat generation and that the heat flow is one-dimensional ($\partial T/\partial y = 0$).

PROPRIETARY MATERIAL. ©The McGraw-Hill Companies, Inc. All rights reserved.

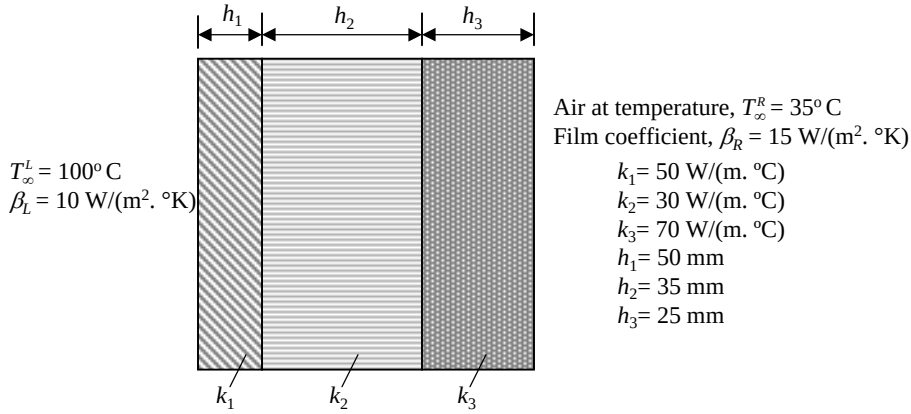

Fig. P4.10

Solution: The assembled set of equations are:

$$\begin{bmatrix} \frac{k_1}{h_1} & -\frac{k_1}{h_1} & 0 & 0 \\ -\frac{k_1}{h_1} & \frac{k_1}{h_1}+\frac{k_2}{h_2} & -\frac{k_2}{h_2} & 0 \\ 0 & -\frac{k_2}{h_2} & \frac{k_2}{h_2}+\frac{k_3}{h_3} & -\frac{k_3}{h_3} \\ 0 & 0 & -\frac{k_3}{h_3} & \frac{k_3}{h_3} \end{bmatrix} \begin{Bmatrix} U_1 \\ U_2 \\ U_3 \\ U_4 \end{Bmatrix} = \begin{Bmatrix} Q_1^1 \\ Q_2^1+Q_1^2 \\ Q_2^2+Q_1^3 \\ Q_2^3 \end{Bmatrix}$$

The values of k_e and h_e are: $k_1 = 50$, $k_2 = 30$, $k_3 = 70$, $h_1 = 0.05$, $h_2 = 0.035$, and $h_3 = 0.025$. The boundary conditions are

$$Q_1^1 = -\beta_L\left(U_1 - T_\infty^L\right), \quad Q_2^1 + Q_1^2 = 0, \quad Q_2^2 + Q_1^3 = 0, \quad Q_2^3 = -\beta_R\left(U_4 - T_\infty^R\right)$$

where $\beta_L = 10$, $T_\infty^L = 100$, $\beta_R = 15$ and $T_\infty^R = 35$. Thus we have

$$\begin{bmatrix} \frac{k_1}{h_1}+\beta_L & -\frac{k_1}{h_1} & 0 & 0 \\ -\frac{k_1}{h_1} & \frac{k_1}{h_1}+\frac{k_2}{h_2} & -\frac{k_2}{h_2} & 0 \\ 0 & -\frac{k_2}{h_2} & \frac{k_2}{h_2}+\frac{k_3}{h_3} & -\frac{k_3}{h_3} \\ 0 & 0 & -\frac{k_3}{h_3} & \frac{k_3}{h_3}+\beta_R \end{bmatrix} \begin{Bmatrix} 100 \\ U_2 \\ U_3 \\ U_4 \end{Bmatrix} = \begin{Bmatrix} \beta_L T_\infty^L \\ 0 \\ 0 \\ \beta_R T_\infty^R \end{Bmatrix}$$

The unknown nodal temperatures can be determined from the above equations. Substituting all the numerical values, we obtain

$$10^3 \begin{bmatrix} 1.010 & -1.000 & 0.000 & 0.000 \\ -1.000 & 1.857 & -0.857 & 0.000 \\ 0.000 & -0.857 & 3.657 & -2.800 \\ 0.000 & 0.000 & -2.800 & 2.815 \end{bmatrix} \begin{Bmatrix} U_1 \\ U_2 \\ U_3 \\ U_4 \end{Bmatrix} = \begin{Bmatrix} 1,000 \\ 0 \\ 0 \\ 525 \end{Bmatrix}$$

and the solution is $U_1 = 61.582$, $U_2 = 61.198°\text{C}$, $U_3 = 60.749°\text{C}$, and $U_4 = 60.612°\text{C}$.

PROPRIETARY MATERIAL. ©The McGraw-Hill Companies, Inc. All rights reserved.

New Problem 4.2: Determine the nodal temperature field in a composite wall (see Figure P4.10 but with different data). Use the minimum number of linear finite elements to solve the problem. What is the heat flux at node 1? The governing differential equation and convection boundary condition are of the form:

$$-\frac{d}{dx}\left(k\frac{dT}{dx}\right)=0, \quad k\frac{dT}{dx}+\beta\left(T-T_\infty\right)=0$$

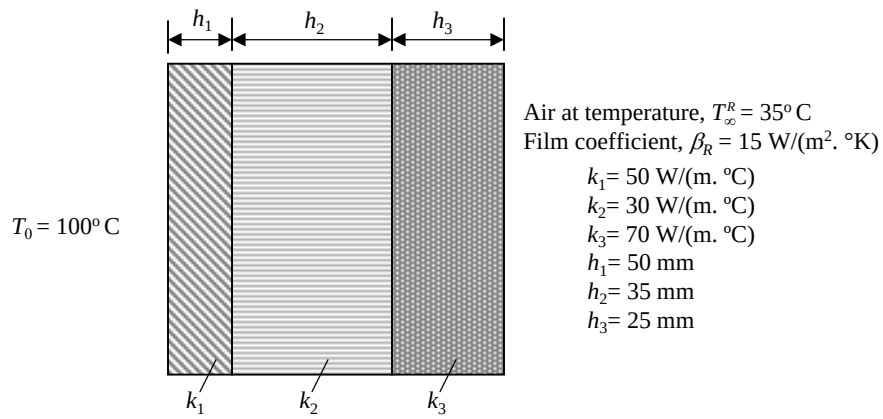

Solution: From the figure it is clear that we should use three linear elements. The element equation is given by

$$\frac{k_e}{h_e}\begin{bmatrix}1 & -1\\ -1 & 1\end{bmatrix}\begin{Bmatrix}u_1^e\\ u_2^e\end{Bmatrix}=\begin{Bmatrix}Q_1^e\\ Q_2^e\end{Bmatrix}$$

Note that there is no internal heat generation ($f=0$). The assembled equations of the three-element mesh are given by

$$\begin{bmatrix}\frac{k_1}{h_1} & -\frac{k_1}{h_1} & 0 & 0\\ -\frac{k_1}{h_1} & \frac{k_1}{h_1}+\frac{k_2}{h_2} & -\frac{k_2}{h_2} & 0\\ 0 & -\frac{k_2}{h_2} & \frac{k_2}{h_2}+\frac{k_3}{h_3} & -\frac{k_3}{h_3}\\ 0 & 0 & -\frac{k_3}{h_3} & \frac{k_3}{h_3}\end{bmatrix}\begin{Bmatrix}U_1\\ U_2\\ U_3\\ U_4\end{Bmatrix}=\begin{Bmatrix}Q_1^1\\ Q_2^1+Q_1^2\\ Q_2^2+Q_1^3\\ Q_2^3\end{Bmatrix}$$

The values of k_e and h_e are given as follows:

$$k_1=50,\ k_2=30,\ k_3=70,\ h_1=5,\ h_2=3.5,\ h_3=2.5$$

The boundary conditions are

$$U_1=T(0)=100,\quad Q_2^1+Q_1^2=0,\quad Q_2^2+Q_1^3=0,\quad Q_2^3=-\beta\left(U_4-T_\infty\right)$$

PROPRIETARY MATERIAL. ©The McGraw-Hill Companies, Inc. All rights reserved.

where $\beta = 15$ and $T_\infty = 35$. Thus we have

$$\begin{bmatrix} \frac{k_1}{h_1} & -\frac{k_1}{h_1} & 0 & 0 \\ -\frac{k_1}{h_1} & \frac{k_1}{h_1}+\frac{k_2}{h_2} & -\frac{k_2}{h_2} & 0 \\ 0 & -\frac{k_2}{h_2} & \frac{k_2}{h_2}+\frac{k_3}{h_3} & -\frac{k_3}{h_3} \\ 0 & 0 & -\frac{k_3}{h_3} & \frac{k_3}{h_3}+\beta \end{bmatrix} \begin{Bmatrix} 100 \\ U_2 \\ U_3 \\ U_4 \end{Bmatrix} = \begin{Bmatrix} Q_1^1 \\ 0 \\ 0 \\ \beta T_\infty \end{Bmatrix}$$

The unknown nodal temperatures can be determined from the condensed equations

$$\begin{bmatrix} \frac{k_1}{h_1}+\frac{k_2}{h_2} & -\frac{k_2}{h_2} & 0 \\ -\frac{k_2}{h_2} & \frac{k_2}{h_2}+\frac{k_3}{h_3} & -\frac{k_3}{h_3} \\ 0 & -\frac{k_3}{h_3} & \frac{k_3}{h_3}+\beta \end{bmatrix} \begin{Bmatrix} U_2 \\ U_3 \\ U_4 \end{Bmatrix} = \begin{Bmatrix} 100\left(\frac{k_1}{h_1}\right) \\ 0 \\ \beta T_\infty \end{Bmatrix}$$

Substituting all the numerical values, we obtain

$$\begin{bmatrix} 10+8.571 & -8.571 & 0 \\ -8.571 & 8.571+28 & -28 \\ 0 & -28 & 28+15 \end{bmatrix} \begin{Bmatrix} U_2 \\ U_3 \\ U_4 \end{Bmatrix} = \begin{Bmatrix} 1000 \\ 0 \\ 525 \end{Bmatrix}$$

and the solution is $U_2 = 79.63°\text{C}$, $U_3 = 55.86°\text{C}$, and $U_4 = 48.58°\text{C}$. The heat at node 1 is given by $[(Q_1^1)_{def} = (Q_1^1)_{equil}]$

$$Q_1^1 = (100 - U_2)\,10 = 203.7W/cm^2$$

New Problem 4.3: The energy equation for heat conduction in a circular disc of radius R is given by (*an axisymmetric*, one-dimensional problem)

$$-\frac{1}{r}\frac{d}{dr}\left(r\frac{d\theta}{dr}\right) = 2\ , \quad 0 < r < R \tag{1}$$

and the boundary conditions are

$$r\frac{d\theta}{dr} = 0 \text{ at } r = 0 \quad \text{and} \quad r\frac{d\theta}{dr} + \theta = 1 \text{ at } r = 1 \tag{2}$$

where θ is the non-dimensional temperature, r is the radial coordinate, and $R = 1$ is the radius of the disc. Use two linear finite elements of equal length to determine the unknown temperatures. It is sufficient to give the condensed equations for the unknown nodal temperatures.

Solution: The finite element model of the equation is given by

$$[K^e]\{\theta^e\} = \{f^e\} + \{Q^e\} \tag{3}$$

PROPRIETARY MATERIAL. ©The McGraw-Hill Companies, Inc. All rights reserved.

where

$$K_{ij}^e = \int_{r_a}^{r_b} r \frac{d\psi_i}{dr}\frac{\psi_j}{dr}\, dr, \quad f_i^e = \int_{r_a}^{r_b} 2r\psi_i\, dr \tag{4}$$

For the choice of linear interpolation, we note that (see the formula sheet for the interpolation functions)

$$\begin{aligned}
\int_{r_a}^{r_b} r\, dr &= \frac{r_b^2 - r_a^2}{2} = \frac{(r_b + r_a)h_e}{2}, \quad \frac{d\psi_1}{dr} = -\frac{1}{h_e}, \quad \frac{d\psi_2}{dr} = \frac{1}{h_e} \\
f_1^e &= 2\int_0^{h_e} (r_a + \bar{r})\left(1 - \frac{\bar{r}}{h_e}\right)\, d\bar{r} \\
&= 2\left(r_a h_e + \frac{h_e^2}{2} - r_a\frac{h_e}{2} - \frac{h_e^2}{3}\right) = \frac{h_e}{3}(3r_a + h_e) \\
f_2^e &= 2\int_0^{h_e} (r_a + \bar{r})\frac{\bar{r}}{h_e}\, d\bar{r} = 2\left(r_a\frac{h_e}{2} + \frac{h_e^2}{3}\right) = \frac{h_e}{3}(3r_a + 2h_e)
\end{aligned}$$

Hence, we have (for any element)

$$[K^e] = \frac{r_b + r_a}{2h_e}\begin{bmatrix} 1 & -1 \\ -1 & 1 \end{bmatrix}, \quad \{f^e\} = \frac{h_e}{3}\begin{Bmatrix} 3r_a + h_e \\ 3r_a + 2h_e \end{Bmatrix} \tag{5}$$

Thus element 1 and 2 coefficient matrices are given by ($h = 1/2$)

$$\begin{aligned}
[K^{(1)}] &= \begin{bmatrix} 0.5 & -0.5 \\ -0.5 & 0.5 \end{bmatrix}, \quad \{f^{(1)}\} = \frac{1}{6}\begin{Bmatrix} 0.5 \\ 1.0 \end{Bmatrix} \\
[K^{(2)}] &= \begin{bmatrix} 1.5 & -1.5 \\ -1.5 & 1.5 \end{bmatrix}, \quad \{f^{(2)}\} = \frac{1}{6}\begin{Bmatrix} 2.0 \\ 2.5 \end{Bmatrix}
\end{aligned} \tag{6}$$

The assembled equations are given by

$$\begin{bmatrix} 0.5 & -0.5 & 0 \\ -0.5 & 0.5 + 1.5 & -1.5 \\ 0 & -1.5 & 1.5 \end{bmatrix}\begin{Bmatrix} U_1 \\ U_2 \\ U_3 \end{Bmatrix} = \begin{Bmatrix} Q_1^1 \\ Q_2^1 + Q_1^2 \\ Q_2^2 \end{Bmatrix} + \frac{1}{6}\begin{Bmatrix} 0.5 \\ 1.0 + 2.0 \\ 2.5 \end{Bmatrix} \tag{7}$$

The boundary conditions are: $Q_1^1 = 0$, $Q_2^1 + Q_1^2 = 0$, and $Q_2^2 + U_3 = 1$. The final equations for the unknown temperatures (i.e., the condensed equations) are

$$\begin{bmatrix} 0.5 & -0.5 & 0 \\ -0.5 & 2.0 & -1.5 \\ 0 & -1.5 & 2.5 \end{bmatrix}\begin{Bmatrix} U_1 \\ U_2 \\ U_3 \end{Bmatrix} = \frac{1}{6}\begin{Bmatrix} 0.5 \\ 3.0 \\ 8.5 \end{Bmatrix} \tag{8}$$

which is to be solved for the three temperatures.

PROPRIETARY MATERIAL. ©The McGraw-Hill Companies, Inc. All rights reserved.

New Problem 4.4: Consider the differential equation (corresponds to heat transfer in a rod, in nondimensional form)

$$-\frac{d^2u}{dx^2} + 400u = 0 \quad \text{for} \quad 0 < x < L = 0.05$$

with the boundary conditions

$$u(0) = 300, \qquad \left(\frac{du}{dx} + 2u\right)|_{x=L} = 0$$

Use two linear finite elements to determine the temperatures at $x = L/2$ and $x = L$. You must at least set up the final condensed equations for the nodal unknowns.

Solution: For a mesh of two linear elements ($h_1 = h_2 = h = L/2 = 0.025$ m), the assembled equations are

$$\left(\frac{1}{h}\begin{bmatrix} 1 & -1 & 0 \\ -1 & 2 & -1 \\ 0 & -1 & 1 \end{bmatrix} + \frac{400h}{6}\begin{bmatrix} 2 & 1 & 0 \\ 1 & 4 & 1 \\ 0 & 1 & 2 \end{bmatrix}\right)\begin{Bmatrix} U_1 \\ U_2 \\ U_3 \end{Bmatrix} = \begin{Bmatrix} Q_1^1 \\ Q_2^1 + Q_1^2 \\ Q_2^2 \end{Bmatrix}$$

The boundary conditions require $U_1 = 300$, $Q_2^1 + Q_1^2 = 0$, and $Q_2^2 = -2U_3$. Hence, we have

$$\left(\begin{bmatrix} 40 & -40 & 0 \\ -40 & 80 & -40 \\ 0 & -40 & 40 \end{bmatrix} + \frac{10}{6}\begin{bmatrix} 2 & 1 & 0 \\ 1 & 4 & 1 \\ 0 & 1 & 2 \end{bmatrix}\right)\begin{Bmatrix} U_1 \\ U_2 \\ U_3 \end{Bmatrix} = \begin{Bmatrix} Q_1^1 \\ 0 \\ -2U_3 \end{Bmatrix}$$

and the condensed equations are

$$\begin{bmatrix} 86.667 & -38.333 \\ -38.333 & 43.333 + 2 \end{bmatrix}\begin{Bmatrix} U_2 \\ U_3 \end{Bmatrix} = \begin{Bmatrix} 38.333 \times 300 \\ 0 \end{Bmatrix}$$

Problem 4.11: Rectangular fins are used to remove heat from the surface of a body by conduction along the fins and convection from the surface of the fins into the surroundings. The fins are 100 mm long, 5 mm wide and 1 mm thick, and made of aluminum with thermal conductivity $k = 170$ W/(m.K). The natural convection heat transfer coefficient associated with the surrounding air is $\beta = 35$ W/(m$^2\cdot$ K) and the ambient temperature is $T_\infty = 20°$ C. Assuming that the heat transfer is one dimensional along the length of the fins and that the heat transfer in each fin is independent of the others, determine the temperature distribution along the fins, and the heat removed from each fin by convection. Use (a) four linear elements, and (b) two quadratic elements. Set up only the condensed equations for the unknown nodal temperatures and heats.

PROPRIETARY MATERIAL. ©The McGraw-Hill Companies, Inc. All rights reserved.

Solution: This problem differs from that of Example 4.3.2 only in the data specified (only the values of k and β differ). The data of the problem is

$$k = 170 \text{ W/m} \cdot^\circ \text{C}, \quad \beta = 35 \text{ W/m}^2 \cdot^\circ \text{C}, \quad T_0 = 100^\circ\text{C}, \quad T_\infty = 20^\circ\text{C}$$

$$L = 100 \text{ mm}, \quad t = 1 \text{ mm}, \quad b = 5 \text{ mm}$$

(a) For the mesh of four linear elements, we have

$$\begin{aligned}
\frac{kA}{h} &= \frac{170 \times 5 \times 10^{-6}}{25 \times 10^{-3}} = 0.034 \\
\frac{\beta P h}{6} &= \frac{35 \times 12 \times 10^{-3} \times 25 \times 10^{-3}}{6} = 0.00175 \\
\beta P T_\infty h &= 35 \times 12 \times 10^{-3} \times 20 \times 25 \times 10^{-3} = 0.21 \\
\beta A T_\infty &= 35 \times 5 \times 10^{-6} \times 20 = 0.0035 \\
\alpha &= 6\frac{A}{Ph} = \frac{6 \times 5}{12 \times 25} = 0.1
\end{aligned}$$

The condensed equations for the unknown nodal temperatures become

$$10^{-1} \begin{bmatrix} 0.7500 & -0.3225 & 0.0000 & 0.0000 \\ -0.3225 & 0.7500 & -0.3225 & 0.0000 \\ 0.0000 & -0.3225 & 0.7500 & -0.3225 \\ 0.0000 & 0.0000 & -0.3225 & 0.3768 \end{bmatrix} \begin{Bmatrix} U_2 \\ U_3 \\ U_4 \\ U_5 \end{Bmatrix} = \begin{Bmatrix} 3.4350 \\ 0.2100 \\ 0.2100 \\ 0.1085 \end{Bmatrix}$$

The solution of these equations is (in °C)

$$U_1 = 100.0, \quad U_2 = 66.573, \quad U_3 = 48.310, \quad U_4 = 39.264, \quad U_5 = 36.490$$

The heat input at node 1 (the total heat loss from the surface of the fin) is

$$Q_1^1 = 1.1365 \text{ W}$$

(b) The condensed equations are ($h = 0.05$ m)

$$\left(\frac{kA}{3h} \begin{bmatrix} 16 & -8 & 0 & 0 \\ -8 & 14 & -8 & 1 \\ 0 & -8 & 16 & -8 \\ 0 & 1 & -8 & 7 \end{bmatrix} + \frac{\beta P h}{30} \begin{bmatrix} 16 & 2 & 0 & 0 \\ 2 & 8 & 2 & -1 \\ 0 & 2 & 16 & 2 \\ 0 & -1 & 2 & 4+\alpha \end{bmatrix} \right) \begin{Bmatrix} U_2 \\ U_3 \\ U_4 \\ U_5 \end{Bmatrix}$$

$$= \begin{Bmatrix} \left(\frac{7kA}{3h} - \frac{4\beta P h}{30}\right) T_0 \\ 0 \\ 0 \\ \beta A T_\infty \end{Bmatrix} + \frac{\beta P T_\infty h}{6} \begin{Bmatrix} 4 \\ 2 \\ 4 \\ 1 \end{Bmatrix}$$

PROPRIETARY MATERIAL. ©The McGraw-Hill Companies, Inc. All rights reserved.

where $\alpha = \beta A/(\beta Ph/30) = 30A/Ph$. We have

$$10^{-1}\begin{bmatrix} 1.0187 & -0.4393 & 0.0000 & 0.0000 \\ -0.4393 & 0.8493 & -0.4393 & 0.0497 \\ 0.0000 & -0.4393 & 1.0187 & -0.4393 \\ 0.0000 & 0.0497 & -0.4393 & 0.4264 \end{bmatrix}\begin{Bmatrix} U_2 \\ U_3 \\ U_4 \\ U_5 \end{Bmatrix} = \begin{Bmatrix} 4.6733 \\ -0.3567 \\ 0.2800 \\ 0.0735 \end{Bmatrix}$$

The solution of these equations is (in °C)

$$U_1 = 100.0, \quad U_2 = 66.939, \quad U_3 = 48.836, \quad U_4 = 39.775, \quad U_5 = 37.015$$

The total heat loss by convection through the fin surface is calculated from ($\beta Ph = 0.021$)

$$\begin{aligned} Q_{total} &= Q^{(1)} + Q^{(2)} \\ &= 0.021\left[\left(\frac{100 + 4 \times 66.939 + 48.836}{6} - 20\right)\right. \\ &\qquad \left. + \left(\frac{48.836 + 4 \times 39.775 + 37.015}{2} - 20\right)\right] \\ &= 1.4754 \text{ W} \end{aligned}$$

The finite element solutions obtained with various meshes of linear and quadratic finite elements are compared in Table P4.11. The convergence of the finite element solutions with h (refined mesh of the same order element) and p (mesh of higher-order element) refinements is clear from the results.

Table P4.11: Comparison of the finite element solutions of Problem 4.11.

$\bar{x}^\dagger$	No. of linear elements			No. of quadratic elements		
	$n = 2$	$n = 4$	$n = 8$	$n = 1$	$n = 2$	$n = 4$
0.125	-	-	81.045	-	-	81.103
0.250	-	66.573	66.864	-	66.939	66.960
0.375	-	-	56.348	-	-	56.460
0.500	46.692	48.310	48.675	48.676	48.836	48.797
0.625	-	-	43.246	-	-	43.368
0.750	-	39.264	39.634	-	39.775	39.757
0.875	-	-	37.557	-	-	37.678
1.000	34.906	36.490	36.854	37.769	37.015	36.976

$\dagger \bar{x} = x/L$.

PROPRIETARY MATERIAL. © The McGraw-Hill Companies, Inc. All rights reserved.

Problem 4.12: Find the heat transfer per unit area through the composite wall shown in Fig. P4.12. Assume one-dimensional heat flow.

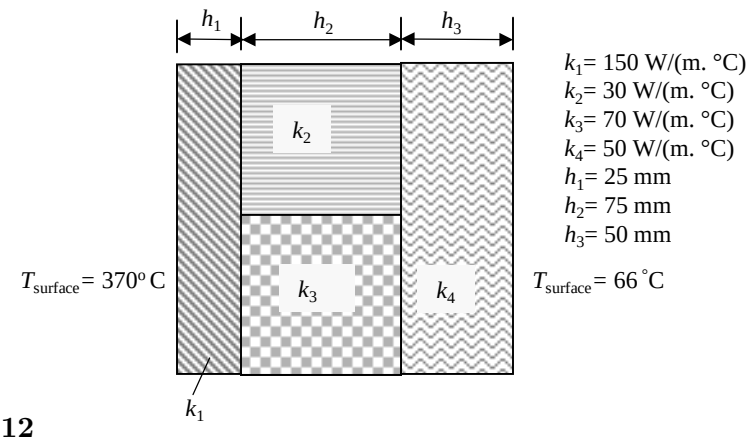

Fig. P4.12

Solution: The assembled system of equations is

$$\begin{bmatrix} \frac{k_1}{h_1} & -\frac{k_1}{h_1} & 0 & 0 \\ -\frac{k_1}{h_1} & \frac{k_1}{h_1}+\frac{k_2}{h_2}+\frac{k_3}{h_2} & -\frac{k_2}{h_2}-\frac{k_3}{h_2} & 0 \\ 0 & -\frac{k_2}{h_2}-\frac{k_3}{h_2} & \frac{k_2}{h_2}+\frac{k_3}{h_2}+\frac{k_4}{h_3} & -\frac{k_4}{h_3} \\ 0 & 0 & -\frac{k_4}{h_3} & \frac{k_4}{h_3} \end{bmatrix} \begin{Bmatrix} U_1 \\ U_2 \\ U_3 \\ U_4 \end{Bmatrix} = \begin{Bmatrix} Q_1^1 \\ Q_2^1+Q_1^2+Q_1^3 \\ Q_2^2+Q_2^3+Q_1^4 \\ Q_2^4 \end{Bmatrix}$$

with

$$\frac{k_1}{h_1} = 6\times 10^{-3}, \quad \frac{k_2}{h_2} = 0.4\times 10^{-3}, \quad \frac{k_3}{h_2} = 0.9333\times 10^{-3}, \quad \frac{k_4}{h_3} = 10^{-3}$$

The boundary conditions are

$$T_1 = 370^\circ \text{ C}, \quad T_4 = 66^\circ \text{ C}, \quad Q_2^1+Q_1^2+Q_1^3 = 0, \quad Q_2^2+Q_2^3+Q_1^4 = 0$$

Hence, the condensed equations are

$$\begin{bmatrix} 7.3333 & -1.3333 \\ -1.3333 & 2.3333 \end{bmatrix} \begin{Bmatrix} U_2 \\ U_3 \end{Bmatrix} = \begin{Bmatrix} 370\frac{k_1}{h_1} \\ 66\frac{k_4}{h_3} \end{Bmatrix} = \begin{Bmatrix} 2,220 \\ 66 \end{Bmatrix}$$

whose solution is $U_2 = 343.57^\circ$ C and $U_3 = 224.61^\circ$ C. The heats at left and right walls, respectively, are

$$Q_1^1 = \frac{k_1}{h_1}(U_1 - U_2) = 158.6 \text{ W}, \quad Q_2^4 = \frac{k_4}{h_3}(U_4 - U_3) = -158.6 \text{ W}$$

PROPRIETARY MATERIAL. ©The McGraw-Hill Companies, Inc. All rights reserved.

Problem 4.13: A steel rod of diameter $D = 2$ cm, length $L = 5$ cm, and thermal conductivity $k = 50$ W/(m ·°C) is exposed to ambient air at $T_\infty = 20$°C with a heat transfer coefficient $\beta = 100$ W/(m$^{2\circ}$ C). If the left end of the rod is maintained at temperature $T_0 = 320$°C, determine the temperatures at distances 25 mm and 50 mm from the left end, and the heat at the left end. The governing equation of the problem is

$$-\frac{d^2\theta}{dx^2} + m^2\theta = 0 \quad \text{for} \quad 0 < x < L$$

where $\theta = T - T_\infty$, T is the temperature, and $m^2 = \beta P/Ak$. The boundary conditions are

$$\theta(0) = T(0) - T_\infty = 300°\text{C}, \quad \left(\frac{d\theta}{dx} + \frac{\beta}{k}\theta\right)\bigg|_{x=L} = 0$$

Use (a) two linear elements and (b) one quadratic element to solve the problem by the finite element method. Compare the finite element nodal temperatures against the exact values.

Solution: (a) For the mesh of two linear elements, the condensed equations are $(U_1 = 300, Q_2^2 = -(\beta/k)U_3 = -2U_3)$,

$$\begin{bmatrix} 86.667 & -38.333 \\ -38.333 & 43.333 + 2.0 \end{bmatrix} \begin{Bmatrix} U_2 \\ U_3 \end{Bmatrix} = \begin{Bmatrix} 11,500 \\ 1,800 \end{Bmatrix}$$

The solution for the primary and secondary variables is given by

$$U_1 = 300,\ U_2 = 211.97,\ U_3 = 179.24;\ (Q_1^1)_{def} = 3521.1,\ (Q_1^1)_{equil} = 4,874.48$$

(b) For one quadratic element mesh we have $(U_1 = 300, Q_3^1 = -(\beta/k)U_3 = -2U_3)$,

$$\begin{bmatrix} 117.33 & -52.00 \\ -52.00 & 49.333 + 2.0 \end{bmatrix} \begin{Bmatrix} U_2 \\ U_3 \end{Bmatrix} = \begin{Bmatrix} 15,600 \\ 0 \end{Bmatrix}$$

and the solution is given by $U_1 = 300$, $U_2 = 213.07$, $U_3 = 180.77$, $(Q_1^1)_{def} = 4569.9$.

The exact solution for the second set of boundary conditions is

$$\theta(x) = \theta(0)\frac{\cosh N(L-x) + (\beta/Nk)\sinh N(L-x)}{\cosh NL + (\beta/Nk)\sinh NL}$$

At the nodes we have $\theta(0.025) = 213.07$, $\theta(0.05) = 180.77$, $Q_1^1 \equiv -(d\theta/dx)_0 = 4569.9$.

Problem 4.14: Find the temperature distribution in the tapered fin shown in Fig. P4.14. Assume that the temperature at the root of the fin is 250°F, the conductivity $k = 120$ Btu/(h ft °F), and the film coefficient $\beta = 15$ Btu/(h ft$^{2\circ}$F), and use three linear elements. The ambient temperature at the top and bottom of the fin is $T_\infty = 75$°F.

PROPRIETARY MATERIAL. ©The McGraw-Hill Companies, Inc. All rights reserved.

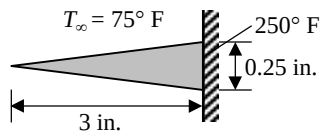

Fig. P4.14

Solution: The governing differential equation for this problem can be derived by making the following assumptions: The fin thickness at the base $x = L = 3$ is small enough so that the temperature is uniform in the transverse direction (i.e., y-direction) to the fin; the heat transfer from the fin edges (see the cross hatched part) may be neglected in comparison to that from the top surface of the fin (into the plane of the paper); and there is no temperature variation along the z-direction (into the plane of the paper). Then the equation governing the one–dimensional heat transfer in the fin is given by

$$-\frac{d}{dx}\left(x\frac{dT}{dx}\right) + N^2(T - T_\infty) = 0$$

where $N^2 = (\beta/k)[1 + (L/Y)^2]^{0.5}$. The boundary conditions are: $(xdT/dx)(0) = 0$ and $T(L) = T_0$. Here we have L=3 in., Y=0.125 in., k= 120 BTu/(hr.ft.°F), and β=15 BTu/(hr.ft^2.°F). Hence, $N^2 = (15/120)\sqrt{1 + (3/0.125)^2} = 3.0026$. Therefore, we have

$$K_{ij}^e = \int_{x_a}^{x_b} \left(x\frac{d\psi_i}{dx}\frac{d\psi_j}{dx} + N^2\psi_i\psi_j\right)\, dx$$

$$f_i^e = \int_{x_a}^{x_b} N^2 T_\infty \psi_i \, dx$$

The element coefficient matrix needed here is already evaluated and recorded in Eq.(3.2.35), page 122 (set $a = 1$ and $c = N^2$). The assembled coefficient matrix for three-element mesh is

$$[K] = \frac{1}{2}\begin{bmatrix} 1 & -1 & 0 & 0 \\ -1 & 4 & -3 & 0 \\ 0 & -3 & 8 & -5 \\ 0 & 0 & -5 & 5 \end{bmatrix} + \frac{N^2 h}{6}\begin{bmatrix} 2 & 1 & 0 & 0 \\ 1 & 4 & 1 & 0 \\ 0 & 1 & 4 & 1 \\ 0 & 0 & 1 & 2 \end{bmatrix}$$

The assembled source vector is given by

$$\{F\} = \frac{N^2 T_\infty h}{2}\begin{Bmatrix} 1 \\ 2 \\ 2 \\ 1 \end{Bmatrix}$$

PROPRIETARY MATERIAL. ©The McGraw-Hill Companies, Inc. All rights reserved.

The assembed equations of the three linear element mesh ($h_e = 1/12$ ft., $T_\infty = 75$) are

$$\begin{bmatrix} 0.58341 & -0.45830 & 0 & 0 \\ -0.45830 & 2.1668 & -1.4583 & 0 \\ 0 & -1.4583 & 4.1668 & -2.4583 \\ 0 & 0 & -2.4583 & 2.5834 \end{bmatrix} \begin{Bmatrix} U_1 \\ U_2 \\ U_3 \\ U_4 \end{Bmatrix} = \begin{Bmatrix} 9.3831 \\ 18.766 \\ 18.766 \\ 9.3831 \end{Bmatrix} + \begin{Bmatrix} Q_1^1 \\ Q_2^1 + Q_1^2 \\ Q_2^2 + Q_1^3 \\ Q_2^3 \end{Bmatrix}$$

Using the boundary conditions, $Q_1^1 = 0$ and $U_4 = 250$, we obtain the solution,

$$T_1(tip) = 166.23^\circ F,\ T_2 = 191.14^\circ F,\ T_3 = 218.89^\circ F,\ (Q_2^3)_{def} = 93.329\text{BTU/hr}.$$

Problem 4.15: Consider steady heat conduction in a wire of circular cross-section with an electrical heat source. Suppose that the radius of the wire is R_0, its electrical conductivity is K_e (Ω^{-1}/cm), and it is carrying an electric current density of I (A/cm ^{2}). During the transmission of an electric current, some of the electrical energy is converted into thermal energy. The rate of heat production per unit volume is given by $q_e = I^2/K_e$. Assume that the temperature rise in the wire is sufficiently small that the dependence of the thermal or electric conductivity on temperature can be neglected. The governing equations of the problem are

$$-\frac{1}{r}\frac{d}{dr}\left(rk\frac{dT}{dr}\right) = q_e \quad \text{for} \quad 0 \le r \le R_0, \quad \left(rk\frac{dT}{dr}\right)\bigg|_{r=0} = 0, \quad T(R_0) = T_0$$

Determine the distribution of temperature in the wire using (a) two linear elements and (b) one quadratic element, and compare the finite element solution at eight equal intervals with the exact solution

$$T(r) = T_0 + \frac{q_e R_0^2}{4k}\left[1 - \left(\frac{r}{R_0}\right)^2\right]$$

Also, determine the heat flow $Q = -2\pi R_0 k(dT/dr)|_{R_0}$ at the surface using (i) the temperature field and (ii) the balance equations.

Solution: The finite element model is the same as in Eqs. (3.4.5a) and (3.4.5b) on page 148 with $a = kr$ and $f = q_e = I^2/K_e$. The element equations are given by (3.4.7) and (3.4.8) for linear and quadratic elements, respectively.

(a) The assembled equations of the mesh of two linear elements is ($h = 0.5R_0$)

$$\pi k \begin{bmatrix} 1.0 & -1.0 & 0 \\ -1.0 & 1.0+3.0 & -3.0 \\ 0 & -3.0 & 3.0 \end{bmatrix} \begin{Bmatrix} U_1 \\ U_2 \\ U_3 \end{Bmatrix} = \frac{\pi q_e h^2}{3} \begin{Bmatrix} 1.0 \\ 2.0+4.0 \\ 5.0 \end{Bmatrix} + \begin{Bmatrix} Q_1^1 \\ Q_2^1 + Q_1^2 \\ Q_2^2 \end{Bmatrix}$$

PROPRIETARY MATERIAL. ©The McGraw-Hill Companies, Inc. All rights reserved.

The boundary conditions are

$$Q_1^1 = 0, \quad Q_2^1 + Q_1^2 = 0, \quad U_3 = T_0$$

Hence, the condensed equations are

$$k \begin{bmatrix} 1.0 & -1.0 \\ -1.0 & 4.0 \end{bmatrix} \begin{Bmatrix} U_1 \\ U_2 \end{Bmatrix} = \frac{q_e R_0^2}{12} \begin{Bmatrix} 1.0 \\ 6.0 + \alpha T_0 \end{Bmatrix}$$

where $\alpha = 36k/(q_e R_0^2)$. Solving for the nodal values of the temperature, we obtain

$$U_1 = \frac{5 q_e R_0^2}{18k} + T_0, \quad U_2 = \frac{7 q_e R_0^2}{36k} + T_0$$

The heat at node 3 is

$$Q_2^2 = 3\pi k(U_3 - U_2) - \frac{5\pi q_e R_0^2}{12} = -\pi q_e R_0^2$$

(b) The finite equations of the mesh of one quadratic element is ($h = R_0$)

$$\frac{\pi k}{3} \begin{bmatrix} 3.0 & -4.0 & 1.0 \\ -4.0 & 16.0 & -12.0 \\ 1.0 & -12.0 & 11.0 \end{bmatrix} \begin{Bmatrix} U_1 \\ U_2 \\ U_3 \end{Bmatrix} = \frac{\pi q_e R_0^2}{3} \begin{Bmatrix} 0.0 \\ 2.0 \\ 1.0 \end{Bmatrix} + \begin{Bmatrix} Q_1^1 \\ Q_2^1 \\ Q_3^1 \end{Bmatrix}$$

The boundary conditions are

$$Q_1^1 = 0, \quad Q_2^1 = 0, \quad U_3 = T_0$$

Hence, the condensed equations are

$$k \begin{bmatrix} 3.0 & -4.0 \\ -4.0 & 16.0 \end{bmatrix} \begin{Bmatrix} U_1 \\ U_2 \end{Bmatrix} = q_e R_0^2 \begin{Bmatrix} -\alpha T_0 \\ 2.0 + \beta T_0 \end{Bmatrix}$$

where $\alpha = k/(q_e R_0^2)$ and $\beta = 12k/(q_e R_0^2)$. Solving for the nodal values of the temperature, we obtain

$$U_1 = \frac{q_e R_0^2}{4k} + T_0, \quad U_2 = \frac{3 q_e R_0^2}{16k} + T_0$$

which coicides with the exact solution at the nodes. The heat at node 3 is

$$Q_3^1 = \frac{\pi k}{3}(U_1 - 12U_2 + 11U_3) - \frac{\pi q_e R_0^2}{3} = -\pi q_e R_0^2$$

which also coincides with the exact value.

PROPRIETARY MATERIAL. ©The McGraw-Hill Companies, Inc. All rights reserved.

Problem 4.16: Consider a nuclear fuel element of spherical form, consisting of a sphere of "fissionable" material surrounded by a spherical shell of aluminum "cladding" as shown in Fig. P4.16. Nuclear fission is a source of thermal energy, which varies non-uniformly from the center of the sphere to the interface of the fuel element and the cladding. We wish to determine the temperature distribution in the nuclear fuel element and the aluminum cladding.

The governing equations for the two regions are the same, with the exception that there is no heat source term for the aluminum cladding. We have

$$-\frac{1}{r^2}\frac{d}{dr}\left(r^2 k_1 \frac{dT_1}{dr}\right) = q \quad \text{for} \quad 0 \le r \le R_F$$

$$-\frac{1}{r^2}\frac{d}{dr}\left(r^2 k_2 \frac{dT_2}{dr}\right) = 0 \quad \text{for} \quad R_F \le r \le R_C$$

where subscripts 1 and 2 refer to the nuclear fuel element and cladding, respectively. The heat generation in the nuclear fuel element is assumed to be of the form

$$q_1 = q_0\left[1 + c\left(\frac{r}{R_F}\right)^2\right]$$

where q_0 and c are constants depending on the nuclear material. The boundary conditions are

$$kr^2\frac{dT_1}{dr} = 0 \quad \text{at} \quad r = 0$$

$$T_1 = T_2 \quad \text{at} \quad r = R_F, \quad \text{and} \quad T_2 = T_0 \quad \text{at} \quad r = R_C$$

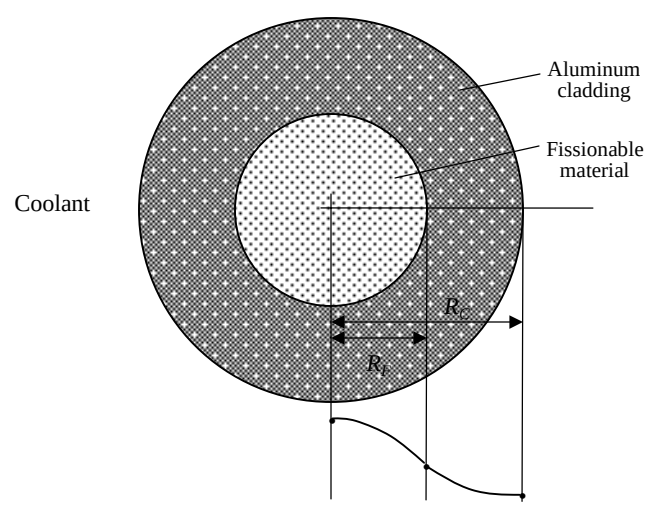

Fig. P4.16

PROPRIETARY MATERIAL. ©The McGraw-Hill Companies, Inc. All rights reserved.

(a) Develop the finite element model, (b) give the *form* of the assembled equations, and (c) indicate the specified primary and secondary variables at the nodes. Use two linear elements to determine the finite element solution for the temperature distribution, and compare the nodal temperatures with the exact solution

$$
\begin{aligned}
T_1 - T_0 &= \frac{q_0 R_F^2}{6k_1}\left\{\left[1-\left(\frac{r}{R_F}\right)^2\right] + \frac{3}{10}c\left[1-\left(\frac{r}{R_F}\right)^4\right]\right\} \\
&\quad + \frac{q_0 R_F^2}{3k_2}(1+\frac{3}{5}c)\left(1-\frac{R_F}{R_C}\right) \\
T_2 - T_0 &= \frac{q_0 R_F^2}{3k_2}(1+\frac{3}{5}c)\left(\frac{R_F}{r}-\frac{R_F}{R_C}\right)
\end{aligned}
$$

Solution: This problem is designed to test the student's understanding of the finite element modeling of dissimilar material problems.

(a) The element coefficients are,

$$K_{ij}^e = (2\pi)^2 \int_{r_a}^{r_b} kr^2 \frac{d\psi_i}{dr}\frac{d\psi_j}{dr}\, dr$$

$$F_i^e = (2\pi)^2 \int_{r_a}^{r_b} q_e r^2 \psi_i \, dr + Q_i^e$$

The assembled equations are of the form,

$$\begin{bmatrix} K_{11}^1 & K_{12}^1 & 0 \\ K_{21}^1 & K_{22}^1 + K_{11}^2 & K_{12}^2 \\ 0 & K_{21}^2 & K_{22}^2 \end{bmatrix} \begin{Bmatrix} U_1 \\ U_2 \\ U_3 \end{Bmatrix} = \begin{Bmatrix} Q_1^1 \\ Q_2^1 + Q_1^2 \\ Q_2^2 \end{Bmatrix}$$

The specified primary and secondary variables are:

$$Q_1^1 = 0,\ u_2^1 = u_1^2 \equiv U_2,\ Q_2^1 + Q_1^2 = 0,\ u_2^2 \equiv U_3 = T_0$$

Fluid Mechanics

Problem 4.17: Consider the flow of a Newtonian viscous fluid on an inclined flat surface, as shown in Fig. P4.17. Examples of such flow can be found in wetted-wall towers and the application of coatings to wallpaper rolls. The momentum equation, for a fully developed steady laminar flow along the z coordinate, is given by

$$-\mu\frac{d^2w}{dx^2} = \rho g \cos\beta$$

where w is the z component of the velocity, μ is the viscosity of the fluid, ρ is the density, g is the acceleration due to gravity, and β is the angle between the inclined

PROPRIETARY MATERIAL. ©The McGraw-Hill Companies, Inc. All rights reserved.

surface and the vertical. The boundary conditions associated with the problem are that the shear stress is zero at $x = 0$ and the velocity is zero at $x = L$:

$$\left(\frac{dw}{dx}\right)\bigg|_{x=0} = 0 \quad w(L) = 0$$

Use (a) two linear finite elements of equal length and (b) one quadratic finite element in the domain $(0, L)$ to solve the problem and compare the two finite element solutions at four points $x = 0,\ \frac{1}{4}L,\ \frac{1}{2}L$, and $\frac{3}{4}L$ of the domain with the exact solution

$$w_e = \frac{\rho g L^2 \cos\beta}{2\mu}\left[1 - \left(\frac{x}{L}\right)^2\right]$$

Evaluate the shear stress ($\tau_{xz} = -\mu\ dw/dx$) at the wall using (i) the velocity fields and (ii) the equilibrium equations, and compare with the exact value.

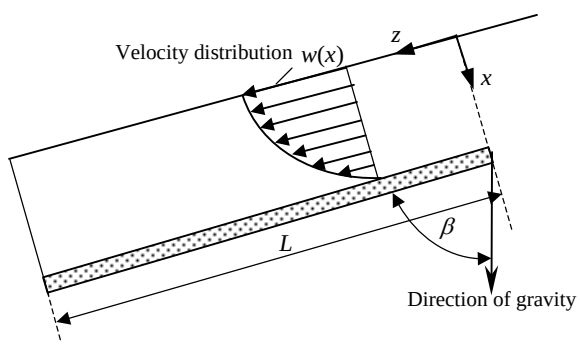

Fig. P4.17

Solution: (a) The assembled equations of the mesh of two linear elements is given by ($h = L/2$)

$$\frac{\mu}{h}\begin{bmatrix} 1 & -1 & 0 \\ -1 & 2 & -1 \\ 0 & -1 & 1 \end{bmatrix}\begin{Bmatrix} U_1 \\ U_2 \\ U_3 \end{Bmatrix} = \frac{\rho g h \cos\beta}{2}\begin{Bmatrix} 1 \\ 2 \\ 1 \end{Bmatrix} + \begin{Bmatrix} Q_1^1 \\ Q_2^1 + Q_1^2 \\ Q_2^2 \end{Bmatrix}$$

The boundary conditions are:

$$U_3 = 0,\ Q_1^1 = 0,\ Q_2^1 + Q_1^2 = 0$$

Solving the condensed equations (*i.e.* the first two equations), we obtain

$$U_1 = \frac{f_0 L^2}{2\mu},\ U_2 = \frac{3 f_0 L^2}{8\mu}\ (f_0 = \rho g \cos\beta)$$

PROPRIETARY MATERIAL. ©The McGraw-Hill Companies, Inc. All rights reserved.

The secondary variable is given by ($\tau_{xz} = -Q_2^2$)

$$(Q_2^2)_{def} = -\frac{3}{4} f_0 L, \quad (Q_2^2)_{equil} = -f_0 L$$

(b) The equations of the mesh of one quadratic element is given by ($h = L$)

$$\frac{\mu}{3h} \begin{bmatrix} 7 & -8 & 1 \\ -8 & 16 & -8 \\ 1 & -8 & 7 \end{bmatrix} \begin{Bmatrix} U_1 \\ U_2 \\ U_3 \end{Bmatrix} = \frac{\rho g h \cos\beta}{6} \begin{Bmatrix} 1 \\ 4 \\ 1 \end{Bmatrix} + \begin{Bmatrix} Q_1^1 \\ Q_2^1 \\ Q_3^1 \end{Bmatrix}$$

Solving the condensed equations (i.e. the first two equations), we obtain

$$U_1 = \frac{f_0 L^2}{2\mu}, \; U_2 = \frac{3 f_0 L^2}{8\mu} \; (f_0 = \rho g \cos\beta)$$

The secondary variable is given by ($\tau_{xz} = -Q_2^2$)

$$(Q_3^1)_{def} = (Q_3^1)_{equil} = -f_0 L$$

The solution obtained by both meshes is exact at the nodes; but at points other than the nodes the solution differs slightly from the exact solution.

Problem 4.18: Consider the steady laminar flow of a viscous fluid through a long circular cylindrical tube. The governing equation is

$$-\frac{1}{r}\frac{d}{dr}\left(r\mu \frac{dw}{dr}\right) = \frac{P_0 - P_L}{L} \equiv f_0$$

where w is the axial (i.e. z) component of velocity, μ is the viscosity, and f_0 is the gradient of pressure (which includes the combined effect of static pressure and gravitational force). The boundary conditions are

$$\left(r\frac{dw}{dr}\right)\bigg|_{r=0} = 0 \quad w(R_0) = 0$$

Using the symmetry and (a) two linear elements, (b) one quadratic element, determine the velocity field and compare with the exact solution at the nodes:

$$w_e(r) = \frac{f_0 R_0^2}{4\mu}\left[1 - \left(\frac{r}{R_0}\right)^2\right]$$

Solution: (a) For the two element mesh of linear elements, the solution is the same as given in Example 4.3.4. The finite element and exact values at the nodes are:

$$U_1 = \frac{5}{18}\alpha, \; U_2 = \frac{7}{36}\alpha, \; u(0) = \frac{1}{4}\alpha, \; u(R_0/2) = \frac{3}{16}\alpha$$

PROPRIETARY MATERIAL. ©The McGraw-Hill Companies, Inc. All rights reserved.

where $\alpha = f_0 R_0^2/\mu$.

(b) The equations of the mesh of one quadratic element is given by ($h = R_0$)

$$\frac{\pi\mu}{3}\begin{bmatrix} 3 & -4 & 1 \\ -4 & 16 & -12 \\ 1 & -12 & 11 \end{bmatrix}\begin{Bmatrix} U_1 \\ U_2 \\ U_3 \end{Bmatrix} = \frac{\pi f_0 R_0^2}{3}\begin{Bmatrix} 0 \\ 2 \\ 1 \end{Bmatrix} + \begin{Bmatrix} Q_1^1 \\ Q_2^1 \\ Q_3^1 \end{Bmatrix}$$

The condensed equations are obtained by deleting the last equation, and the solution given by these equations coincide with the exact solution at the nodes:

$$U_1 = \frac{1}{4}\alpha, \quad U_2 = \frac{3}{16}\alpha$$

where $\alpha = f_0 R_0^2/\mu$.

Problem 4.19: In the problem of the flow of a viscous fluid through a circular cylinder (Problem 4.18), assume that the fluid slips at the cylinder wall; i.e. instead of assuming that $w = 0$ at $r = R_0$, use the boundary condition that

$$kw = -\mu\frac{dw}{dr} \quad \text{at} \quad r = R_0$$

in which k is the "coefficient of sliding friction." Solve the problem with two linear elements.

Solution: This problem differs from that in Example 4.3.4 only in the boundary conditions. Here we have

$$U_1 = 0, \quad Q_2^2 = -kR_0U_3$$

For the mesh of two linear elements we have,

$$\pi\mu\begin{bmatrix} 1 & -1 & 0 \\ -1 & 4 & -3 \\ 0 & -3 & 3 \end{bmatrix}\begin{Bmatrix} U_1 \\ U_2 \\ U_3 \end{Bmatrix} = \frac{\pi f_0 R_0^2}{12}\begin{Bmatrix} 1 \\ 6 \\ 5 \end{Bmatrix} + \begin{Bmatrix} Q_1^1 \\ Q_2^1 + Q_1^2 \\ -kR_0U_3 \end{Bmatrix}$$

The solution can be obtained by Cramer's rule:

$$U_1 = (c + \frac{5}{18})\alpha, \; U_2 = (c + \frac{7}{36})\alpha, \; U_3 = c\alpha, \; c = \frac{\pi\mu}{kR_0}$$

where $\alpha = f_0 R_0^2/\mu$. Note that in the limit c approaches zero, we obtain the solution to Problem 3.24.

Problem 4.20: Consider the steady laminar flow of a Newtonian fluid with constant density in a long annular region between two coaxial cylinders of radii R_i and R_0 (see Fig. P4.20). The differential equation for this case is given by

$$-\frac{1}{r}\frac{d}{dr}\left(r\mu\frac{dw}{dr}\right) = \frac{P_1 - P_2}{L} \equiv f_0$$

PROPRIETARY MATERIAL. ©The McGraw-Hill Companies, Inc. All rights reserved.

where w is the velocity along the cylinders (i.e., the z component of velocity), μ is the viscosity, L is the length of the region along the cylinders in which the flow is fully developed, and P_1 and P_2 are the pressures at $z = 0$ and $z = L$, respectively (P_1 and P_2 represent the combined effect of static pressure and gravitational force). The boundary conditions are

$$w = 0 \quad \text{at} \quad r = R_0 \quad \text{and} \quad R_i$$

Solve the problem using (a) two linear elements and (b) one quadratic element, and compare the finite element solutions with the exact solution at the nodes:

$$w_e(r) = \frac{f_0 R_0^2}{4\mu}\left[1 - \left(\frac{r}{R_0}\right)^2 + \frac{1-k^2}{\ln(1/k)}\ln\left(\frac{r}{R_0}\right)\right]$$

where $k = R_i/R_0$. Determine the shear stress $\tau_{rz} = -\mu\, dw/dr$ at the walls using (i) the velocity field and (ii) the equilibrium equations, and compare with the exact values. (Note that the steady laminar flow of a viscous fluid through a long cylinder or a circular tube can be obtained as a limiting case of $k \to 0$.)

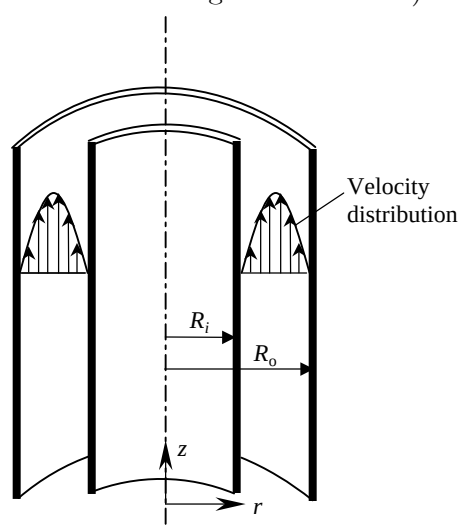

Fig. P4.20

Solution: (a) For the mesh of two linear elements we have

$$\frac{\pi\mu}{L}\begin{bmatrix} \alpha & -\alpha & 0 \\ -\alpha & \alpha+\beta & -\beta \\ 0 & -\beta & \beta \end{bmatrix}\begin{Bmatrix} U_1 \\ U_2 \\ U_3 \end{Bmatrix} = \frac{\pi f_0 L}{12}\begin{Bmatrix} 5R_i + R_0 \\ 6(R_i + R_0) \\ R_i + 5R_0 \end{Bmatrix} + \begin{Bmatrix} Q_1^1 \\ Q_2^1 + Q_1^2 \\ Q_2^2 \end{Bmatrix}$$

where $L = (R_0 - R_i), \alpha = (3R_i + R_0)$ and $\beta = (R_i + 3R_0)$. The boundary conditions are: $U_1 = U_3 = 0$. Hence we have the solution,

$$U_2 = \frac{1}{4}\frac{f_0 L^2}{\mu},\ (\tau_{rz})_{def}(R_i) = -\frac{1}{2}f_0 L,\ (\tau_{rz})_{def}(R_0) = \frac{1}{2}f_0 L$$

PROPRIETARY MATERIAL. ©The McGraw-Hill Companies, Inc. All rights reserved.

(b) For the mesh of one quadratic element we have

$$\frac{\pi\mu}{3L}\begin{bmatrix} 3R_0+11R_i & -4R_0-12R_i & R_0+R_i \\ -4R_0-12R_i & 16(R_0+R_i) & -12R_0-4R_i \\ R_0+R_i & -12R_0-4R_i & 11R_0+3R_i \end{bmatrix}\begin{Bmatrix} U_1 \\ U_2 \\ U_3 \end{Bmatrix}$$

$$= \frac{\pi f_0 L}{3}\begin{Bmatrix} R_i \\ 2R_i+2R_0 \\ R_0 \end{Bmatrix} + \begin{Bmatrix} Q_1^1 \\ Q_2^1 \\ Q_3^1 \end{Bmatrix}$$

The solution is ($L = R_0 - R_i$),

$$U_2 = \frac{1}{8}\frac{f_0 L^2}{\mu},\ (\tau_{rz})_{def}(R_i) = -\frac{1}{2}f_0 L,\ (\tau_{rz})_{def}(R_0) = \frac{1}{2}f_0 L$$

Problem 4.21: Consider the steady laminar flow of two immiscible incompressible fluids in a region between two parallel stationary plates under the influence of a pressure gradient. The fluid rates are adjusted such that the lower half of the region is filled with Fluid I (the denser and more viscous fluid) and the upper half is filled with Fluid II (the less dense and less viscous fluid), as shown in Fig. P4.21. We wish to determine the velocity distributions in each region using the finite element method.

The governing equations for the two fluids are

$$-\mu_1\frac{d^2u_1}{dx^2} = f_0, \quad -\mu_2\frac{d^2u_2}{dx^2} = f_0$$

where $f_0 = (P_0 - P_L)/2b$ is the pressure gradient. The boundary conditions are

$$u_1(-b) = 0 \quad u_2(b) = 0, \quad u_1(0) = u_2(0)$$

Solve the problem using four linear elements, and compare the finite element solutions with the exact solution at the nodes

$$u_i = \frac{f_0 b^2}{2\mu_i}\left[\frac{2\mu_i}{\mu_1+\mu_2} + \frac{\mu_1-\mu_2}{\mu_1+\mu_2}\frac{y}{b} - \left(\frac{y}{b}\right)^2\right] \quad (i = 1, 2)$$

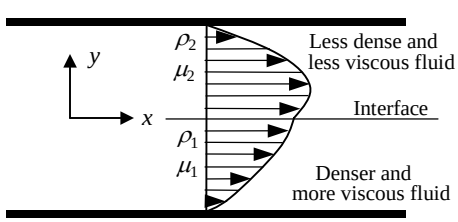

Fig. P4.21

PROPRIETARY MATERIAL. ©The McGraw-Hill Companies, Inc. All rights reserved.

Solution: The assembled finite element equations are ($h = b/2$)

$$\frac{1}{h}\begin{bmatrix} \mu_2 & -\mu_2 & 0 & 0 & 0 \\ -\mu_2 & 2\mu_2 & -\mu_2 & 0 & 0 \\ 0 & -\mu_2 & \mu_2+\mu_1 & -\mu_1 & 0 \\ 0 & 0 & -\mu_1 & 2\mu_1 & -\mu_1 \\ 0 & 0 & 0 & -\mu_1 & \mu_1 \end{bmatrix}\begin{Bmatrix} U_1 \\ U_2 \\ U_3 \\ U_4 \\ U_5 \end{Bmatrix} = \begin{Bmatrix} Q_1^1 \\ Q_2^1+Q_1^2 \\ Q_2^2+Q_1^3 \\ Q_2^3+Q_1^4 \\ Q_2^4 \end{Bmatrix} + \begin{Bmatrix} f_1^1 \\ f_2^1+f_1^2 \\ f_2^2+f_1^3 \\ f_2^3+f_1^4 \\ f_2^4 \end{Bmatrix}$$

After imposing the boundary conditions, we obtain the following condensed equations:

$$\frac{2}{b}\begin{bmatrix} 2\mu_2 & -\mu_2 & 0 \\ -\mu_2 & \mu_2+\mu_1 & -\mu_1 \\ 0 & -\mu_1 & 2\mu_1 \end{bmatrix}\begin{Bmatrix} U_2 \\ U_3 \\ U_4 \end{Bmatrix} = \frac{f_0 b}{2}\begin{Bmatrix} 1 \\ 1 \\ 1 \end{Bmatrix}$$

Solving for (U_2, U_3, U_4), we obtain

$$\begin{Bmatrix} U_2 \\ U_3 \\ U_4 \end{Bmatrix} = \frac{f_0 b^2}{8\mu_1\mu_2(\mu_1+\mu_2)}\begin{bmatrix} (2\mu_2+\mu_1)\mu_1 & 2\mu_1\mu_2 & \mu_1\mu_2 \\ 2\mu_1\mu_2 & 4\mu_1\mu_2 & 2\mu_1\mu_2 \\ \mu_1\mu_2 & 2\mu_1\mu_2 & (\mu_2+2\mu_1)\mu_2 \end{bmatrix}\begin{Bmatrix} 1 \\ 1 \\ 1 \end{Bmatrix}$$

$$= \frac{f_0 b^2}{8\mu_1\mu_2(\mu_1+\mu_2)}\begin{Bmatrix} 5\mu_1\mu_2+\mu_1^2 \\ 8\mu_1\mu_2 \\ 5\mu_1\mu_2+\mu_2^2 \end{Bmatrix}$$

which coincides with the exact solution at the nodes.

Problem 4.22: The governing equation for an unconfined aquifer with flow in the radial direction is given by the differential equation

$$-\frac{1}{r}\frac{d}{dr}\left(rk\frac{du}{dr}\right) = f$$

where k is the coefficient of permeability, f the recharge, and u the piezometric head. Pumping is considered to be a negative recharge. Consider the following problem. A well penetrates an aquifer and pumping is performed at $r = 0$ at a rate $Q = 150$ m^2/h. The permeability of the aquifer is $k = 25$ m^3/h. A constant head $u_0 = 50$ m exists at a radial distance $L = 200$ m. Determine the piezometric head at radial distances of 0, 10, 20, 40, 80, and 140 m (see Fig. P4.22). You are required to set up the finite element equations for the unknowns using a nonuniform mesh of six linear elements.

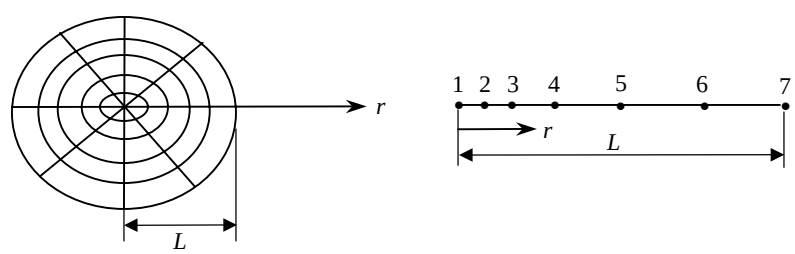

Fig. P4.22

PROPRIETARY MATERIAL. ©The McGraw-Hill Companies, Inc. All rights reserved.

Solution: This equation is a special case of Eqs. (3.4.1) with $a(r) = kr$ and $f = 0$ (no distributed source in the problem). Hence, the element equations are given by Eqs. (3.4.5a,b); the coefficient matrix for the linear element is given by Eq. (3.4.7) with $a_e = k$:

$$[K^1] = \pi k \begin{bmatrix} 1 & -1 \\ -1 & 1 \end{bmatrix}, \quad [K^2] = \pi k \begin{bmatrix} 3 & -3 \\ -3 & 3 \end{bmatrix}$$
$$[K^3] = \pi k \begin{bmatrix} 3 & -3 \\ -3 & 3 \end{bmatrix}, \quad [K^4] = \pi k \begin{bmatrix} 3 & -3 \\ -3 & 3 \end{bmatrix}$$
$$[K^5] = \frac{\pi k}{3} \begin{bmatrix} 11 & -11 \\ -11 & 11 \end{bmatrix}, \quad [K^6] = \frac{\pi k}{3} \begin{bmatrix} 17 & -17 \\ -17 & 17 \end{bmatrix}$$

All element vectors $\{f^e\} = \{0\}$. The assembly of the element equations is straightforward. The boundary conditions require the sums of all Q's be zero and $Q_1^1 = -150$ m^2/hr and $U_7 = u_0 = 50$m. The solution (solved using FEM1D) is,

$$U_1 = 45.322, \quad U_2 = 47.232, \quad U_3 = 47.869, \quad U_4 = 48.505$$
$$U_5 = 49.142, \quad U_6 = 49.663, \quad U_7 = 50.000$$
$$(Q_2^6)_{equil} = 149.985, \quad (Q_2^6)_{def} = 2\pi kr \left(\frac{U_7 - U_6}{h} \right) = 176.45$$

The exact solution is given by (which has a singularity at $r = 0$)

$$u(r) = \frac{Q}{2\pi k} \log \left(\frac{r}{L} \right) + u_0$$

where $Q = -150, k = 25, u_0 = 50, L = 200$.

Problem 4.23: Consider a slow, laminar flow of a viscous substance (for example, glycerin solution) through a narrow channel under controlled pressure drop of 150 Pa/m. The channel is 5 m long (flow direction), 10 cm high, and 50 cm wide. The upper wall of the channel is maintained at 50°C while the lower wall is maintained at 25°C. The viscosity and density of the substance are temperature dependent, as given in Table P4.33. Assuming that the flow is essentially one dimensional (justified by the dimensions of the channel), determine the velocity field and mass flow rate of the fluid through the channel.

Solution: The material properties given in Table P4.23(a) suggest that we use a five element mesh of linear elements to analyze the problem. In reality, the property variation is continuous, $\mu = \mu(T)$ and $\rho = \rho(T)$. Since we only have the point data, we can use the data to either generate a continuous functions $\mu(T)$ and $\rho(T)$ using regression/interpolation or just assume element-wise constant properties. In view of the mild variation of the properties with the temperature, we shall use element-wise constant properties in the analysis. The element-wise constant properties are listed in Table P4.23(b).

PROPRIETARY MATERIAL. ©The McGraw-Hill Companies, Inc. All rights reserved.

Table P4.23(a): Properties of the viscous substance of Problem 4.23.

y (m)	Temp. (°C)	Viscosity [kg/(m· s)]	Density (kg/m^3)
0.00	50	0.10	1233
0.02	45	0.12	1238
0.04	40	0.20	1243
0.06	35	0.28	1247
0.08	30	0.40	1250
0.10	25	0.65	1253

Table P4.23(b): Element-wise constant properties of the viscous substance of Problem 4.23.

Element	Viscosity [kg/(m· s)]	Density (kg/m^3)
5	0.110	1236
4	0.160	1241
3	0.240	1245
2	0.340	1249
1	0.525	1252

The governing equation of the problem is

$$-\frac{d}{dy}\left(\mu\frac{du}{dy}\right) = -\frac{dp}{dx} \tag{1}$$

where $u = u(y)$ is the horizontal velocity and $-dp/dx$ is the pressure drop across the channel. The boundary conditions on u are provided by the requirement that fluid, being viscous, does not slip past the fixed wall, i.e.,

$$u(0) = 0, \qquad u(0.1) = 0 \tag{2}$$

Clearly, the governing equation is a special case of the model equation. Hence, we have all the needed finite element equations to solve the problem. In particular, the element equations associated with a linear finite element for the problem are

$$\frac{\mu_e}{h_e}\begin{bmatrix} 1 & -1 \\ -1 & 1 \end{bmatrix}\begin{Bmatrix} u_1^e \\ u_2^e \end{Bmatrix} = \frac{f_e h_e}{2}\begin{Bmatrix} 1 \\ 1 \end{Bmatrix} + \begin{Bmatrix} Q_1^e \\ Q_2^e \end{Bmatrix} \tag{3}$$

where $f_e = 120$ Pa/m, $h_e = 0.02$m, and values of μ_e are given in Table P4.23(b).

The assembled equations are given by

$$\begin{bmatrix} 26.25 & -26.25 & 0.00 & 0.00 & 0.00 & 0.00 \\ -26.25 & 43.25 & -17.00 & 0.00 & 0.00 & 0.00 \\ 0.00 & -17.00 & 29.00 & -12.00 & 0.00 & 0.00 \\ 0.00 & 0.00 & -12.00 & 20.00 & -8.00 & 0.00 \\ 0.00 & 0.00 & 0.00 & -8.0 & 13.5 & -5.50 \\ 0.00 & 0.00 & 0.00 & 0.00 & -5.50 & 5.50 \end{bmatrix}\begin{Bmatrix} U_1 \\ U_2 \\ U_3 \\ U_4 \\ U_5 \\ U_6 \end{Bmatrix}$$

PROPRIETARY MATERIAL. ©The McGraw-Hill Companies, Inc. All rights reserved.

$$= \begin{Bmatrix} 1.2 \\ 2.4 \\ 2.4 \\ 2.4 \\ 2.4 \\ 1.2 \end{Bmatrix} + \begin{Bmatrix} Q_1^{(1)} \\ Q_2^{(1)} + Q_1^{(2)} \\ Q_2^{(2)} + Q_1^{(3)} \\ Q_2^{(3)} + Q_1^{(4)} \\ Q_2^{(4)} + Q_1^{(5)} \\ Q_2^{(5)} \end{Bmatrix} \tag{4}$$

Solid and Structural Mechanics

Problem 4.24: The equation governing the axial deformation of an elastic bar in the presence of applied mechanical loads f and P and a temperature change T is

$$-\frac{d}{dx}\left[EA\left(\frac{du}{dx} - \alpha T\right)\right] = f \quad \text{for} \quad 0 < x < L$$

where α is the thermal expansion coefficient, E the modulus of elasticity, and A the cross-sectional area. Using three linear finite elements, determine the axial displacements in a nonuniform rod of length 30 in., fixed at the left end and subjected to an axial force $P = 400\ lb$ and a temperature change of 60°F. Take $A(x) = 6 - \frac{1}{10}x$ in^2, $E = 30 \times 10^6$ lb/in^2, and $\alpha = 12 \times 10^{-6}$ /(in °F).

Solution: The weak form leads to the following definition of element coefficients,

$$K_{ij}^e = \int_{x_a}^{x_b} EA \frac{d\psi_i}{dx}\frac{d\psi_j}{dx}\ dx$$

$$F_i^e = \int_{x_a}^{x_b} (f + EA\alpha T)\psi_i\ dx + Q_i^e$$

For three linear element mesh, the condensed equations ($U_1 = 0, Q_2^3 = P = 400$) are given by (f=0 and h=10 in.)

$$10^6 \begin{bmatrix} 30.0 & -13.5 & 0 \\ -13.5 & 24.0 & -10.5 \\ 0 & -10.5 & 10.5 \end{bmatrix} \begin{Bmatrix} U_2 \\ U_3 \\ U_4 \end{Bmatrix} = 10^6 \begin{Bmatrix} 1.080 \\ 0.864 \\ 0.360 \end{Bmatrix} + \begin{Bmatrix} 0 \\ 0 \\ P \end{Bmatrix}$$

The solution of these equations is

$$U_2 = 0.13966\,\text{in.},\ U_3 = 0.23036\,\text{in.},\ U_4 = 0.26468\,\text{in.}$$

Problem 4.25: Find the stresses and compressions in each section of the composite member shown in Fig. P4.25. Use $E_s = 30 \times 10^6$ psi, $E_a = 10^7$ psi, $E_b = 15 \times 10^6$ psi, and the minimum number of linear elements.

PROPRIETARY MATERIAL. ©The McGraw-Hill Companies, Inc. All rights reserved.

Fig. P4.25

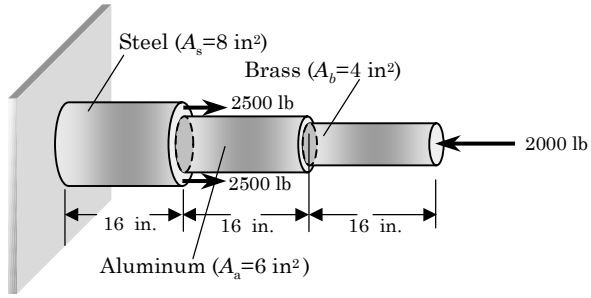

Solution: The three element coefficient matrices are

$$[K^{(1)}] = \frac{8 \times 30 \times 10^6}{16} \begin{bmatrix} 1 & -1 \\ -1 & 1 \end{bmatrix}; \quad [K^{(2)}] = \frac{6 \times 10 \times 10^6}{16} \begin{bmatrix} 1 & -1 \\ -1 & 1 \end{bmatrix}$$

$$[K^{(3)}] = \frac{4 \times 15 \times 10^6}{16} \begin{bmatrix} 1 & -1 \\ -1 & 1 \end{bmatrix}$$

The assembly of three elements of equal length $h_1 = h_2 = h_3 = 16$ in, we obtain

$$\frac{10^7}{16} \begin{bmatrix} 24 & -24 & 0 & 0 \\ -24 & 24+6 & -6 & 0 \\ 0 & -6 & 6+6 & -6 \\ 0 & 0 & -6 & 6 \end{bmatrix} \begin{Bmatrix} U_1 \\ U_2 \\ U_3 \\ U_4 \end{Bmatrix} = \begin{Bmatrix} P_1^{(1)} \\ P_2^{(1)} + P_1^{(2)} \\ P_2^{(2)} + P_1^{(3)} \\ P_2^{(3)} \end{Bmatrix}$$

The boundary conditions are $U_1 = 0.0$, $P_2^{(1)} + P_1^{(2)} = 5,000$, $P_2^{(2)} + P_1^{(3)} = 0$, and $P_2^{(3)} = -2,000$ lb. The condensed equations become

$$\frac{10^7}{16} \begin{bmatrix} 30 & -6 & 0 \\ -6 & 12 & -6 \\ 0 & -6 & 6 \end{bmatrix} \begin{Bmatrix} U_2 \\ U_3 \\ U_4 \end{Bmatrix} = \begin{Bmatrix} 5,000 \\ 0 \\ -2,000 \end{Bmatrix}$$

whose solution is $U_2 = 0.2 \times 10^{-3}$ in., $U_3 = -0.3333 \times 10^{-3}$ in., $U_4 = -0.8667 \times 10^{-3}$ in. Thus, the steel bar has an elongation of 0.0002 in, the aluminum has a compression of 0.0005333 in, and the brass has compression of 0.0005333 in. The forces in each member can be computed from the element equations:

$$P_2^{(1)} = 3,000\,\text{lb}, \quad P_2^{(2)} = -2,000\,\text{lb}, \quad P_2^{(2)} = -2,000\,\text{lb}$$

Hence, the stresses are

$$\sigma_s = \frac{3000}{8} = 375\,\text{psi}, \quad \sigma_a = -\frac{2000}{6} = -333.33\,\text{psi}, \quad \sigma_b = -\frac{2000}{4} = -500\,\text{psi}$$

PROPRIETARY MATERIAL. ©The McGraw-Hill Companies, Inc. All rights reserved.

Problem 4.26: Find the three-element finite element solution to the stepped-bar problem. See Fig. P4.26 for the geometry and data. *Hint:* Solve the problem to see if the end displacement exceeds the gap. If it does, resolve the problem with modified boundary condition at $x = 24$ in.

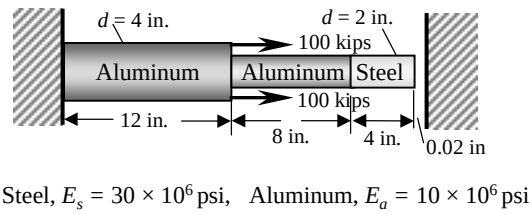

Fig. P4.26

Solution: We note the following data first:

$$A_1 = 4\pi,\ A_2 = \pi,\ A_3 = A_2,\ E_1 = E_a,\ E_2 = E_1,\ E_3 = E_s = 3E_a$$

The assembled equations are

$$\frac{\pi E_a}{24}\begin{bmatrix} 8 & -8 & 0 & 0 \\ -8 & 8+3 & -3 & 0 \\ 0 & -3 & 3+18 & -18 \\ 0 & 0 & -18 & 18 \end{bmatrix}\begin{Bmatrix} U_1 \\ U_2 \\ U_3 \\ U_4 \end{Bmatrix} = \begin{Bmatrix} Q_1^1 \\ Q_2^1 + Q_1^2 \\ Q_2^2 + Q_1^3 \\ Q_2^3 \end{Bmatrix}$$

The balance relations and boundary conditions are:

$$U_1 = 0,\ Q_2^1 + Q_1^2 = 2P,\ Q_2^2 + Q_1^3 = 0,\ Q_2^3 = 0$$

The condensed equations are

$$\frac{\pi E_a}{24}\begin{bmatrix} 11 & -3 & 0 \\ -3 & 21 & -18 \\ 0 & -18 & 18 \end{bmatrix}\begin{Bmatrix} U_2 \\ U_3 \\ U_4 \end{Bmatrix} = \begin{Bmatrix} 2P \\ 0 \\ 0 \end{Bmatrix}$$

The solution is given by $(E_a = 10^7, P = 10^5)$

$$U_2 = U_3 = U_4 = \frac{6P}{\pi E_a} = 0.0191\text{in.}, (Q_1^1)_{eqil} = -2P,\ (Q_1^1)_{def} = -2P$$

The displacement is less than the gap, and hence the end does not touch the rigid wall.

Problem 4.27: Analyze the stepped bar with its right end supported by a linear axial spring (see Fig. P4.27). The boundary condition at $x = 24$ in is

$$EA\frac{du}{dx} + ku = 0$$

PROPRIETARY MATERIAL. ©The McGraw-Hill Companies, Inc. All rights reserved.

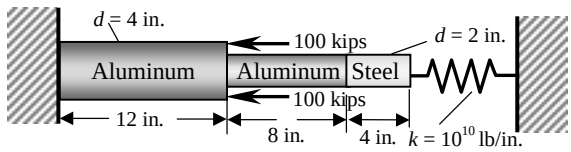

Steel, $E_s = 30 \times 10^6$ psi, Aluminum, $E_a = 10 \times 10^6$ psi

Fig. P4.27

Solution: The stepped bar is the same as that in Problem 4.24. Hence, The assembled equations are

$$\frac{\pi E_a}{24}\begin{bmatrix} 8 & -8 & 0 & 0 \\ -8 & 8+3 & -3 & 0 \\ 0 & -3 & 3+18 & -18 \\ 0 & 0 & -18 & 18 \end{bmatrix}\begin{Bmatrix} U_1 \\ U_2 \\ U_3 \\ U_4 \end{Bmatrix} = \begin{Bmatrix} Q_1^1 \\ Q_2^1 + Q_1^2 \\ Q_2^2 + Q_1^3 \\ Q_2^3 \end{Bmatrix}$$

The balance relations and boundary conditions are:

$$U_1 = 0,\ Q_2^1 + Q_1^2 = -2P,\ Q_2^2 + Q_1^3 = 0,\ Q_2^3 = -kU_4$$

The condensed equations are

$$\frac{\pi E_a}{24}\begin{bmatrix} 11 & -3 & 0 \\ -3 & 21 & -18 \\ 0 & -18 & 18+c \end{bmatrix}\begin{Bmatrix} U_2 \\ U_3 \\ U_4 \end{Bmatrix} = \begin{Bmatrix} -2P \\ 0 \\ 0 \end{Bmatrix}$$

where $c = \frac{24k}{\pi E_a}$. The solution is given by

$$U_2 = \frac{-24P(18+7c)}{\pi E_a(72+37c)},\quad U_3 = \frac{-24P(18+c)}{\pi E_a(72+37c)},\quad U_4 = -\frac{432P}{\pi E_a(72+37c)}$$

Substituting $k = 10^{10}, E_a = 10^7$ and $P = 10^5$, we obtain

$$U_2 = -0.014454,\quad U_3 = -0.002069,\quad U_4 = -0.4863 \times 10^{-5}$$

Problem 4.28: A solid circular brass cylinder $E_b = 15 \times 10^6$ psi, $d_s = 0.25$ in.) is encased in a hollow circular steel ($E_s = 30 \times 10^6$ psi, $d_s = 0.21$ in). A load of $P = 1,330$ lb compresses the assembly, as shown in Fig. P4.28. Determine (a) the compression, and (b) compressive forces and stresses in the steel shell and brass cylinder. Use the minimum number of linear finite elements. Assume that the Poisson effect is negligible.

PROPRIETARY MATERIAL. ©The McGraw-Hill Companies, Inc. All rights reserved.

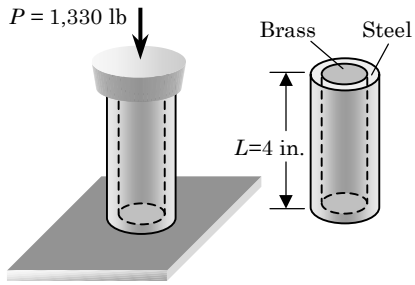

Fig. P4.28

Solution: The problem can be considered as two members in parallel. The element equations are

$$\frac{E_e A_e}{h_e}\begin{bmatrix} 1 & -1 \\ -1 & 1 \end{bmatrix}\begin{Bmatrix} u_1^e \\ u_2^e \end{Bmatrix} = \begin{Bmatrix} P_1^{(e)} \\ P_2^{(e)} \end{Bmatrix}. \tag{1}$$

The two element assembly is given by

$$\begin{bmatrix} \frac{E_b A_b}{h_b} + \frac{E_s A_s}{h_s} & -\left(\frac{E_b A_b}{h_b} + \frac{E_s A_s}{h_s}\right) \\ -\left(\frac{E_b A_b}{h_b} + \frac{E_s A_s}{h_s}\right) & \frac{E_b A_b}{h_b} + \frac{E_s A_s}{h_s} \end{bmatrix}\begin{Bmatrix} U_1 \\ U_2 \end{Bmatrix} = \begin{Bmatrix} P_1^{(b)} + P_1^{(s)} \\ P_2^{(b)} + P_2^{(s)} \end{Bmatrix}. \tag{2}$$

where

$$h_b = h_s = 4.0 \text{ in}, \quad A_b = 0.04909 \text{ in}^2, \quad A_s = 0.03464 \text{ in}^2.$$

Using the boundary conditions

$$U_1 = 0, \quad P_2^{(b)} + P_2^{(s)} = -P,$$

we obtain the compression

$$U_2 = -\frac{P}{\frac{E_b A_b}{h_b} + \frac{E_s A_s}{h_s}} = -\frac{1330 \times 10^{-6}}{0.1841 + 0.2598} = -0.002996 \approx 0.003 \text{ in.}$$

The element forces $P_i^{(b)}$ and $P_i^{(s)}$ are obtained from Eq. (1):

$$P_2^{(b)} = \frac{E_b A_b}{h_b} U_2 = -551.59 \text{ lb}, \quad P_2^{(s)} = \frac{E_s A_s}{h_s} U_2 = -778.41 \text{ lb}$$

The stresses in steel and brass are

$$\sigma_s = 22.47 \text{ ksi (compressive)}, \quad \sigma_b = 11.24 \text{ ksi (compressive)}.$$

PROPRIETARY MATERIAL. © The McGraw-Hill Companies, Inc. All rights reserved.

Problem 4.29: A rectangular steel bar ($E_s = 30 \times 10^6$ psi) of length 24 in. has a slot in the middle half of its length, as shown in Fig. 4.29. Determine the displacement of the ends due to the axial loads $P = 2,000$ lb. Use the minimum number of linear elements.

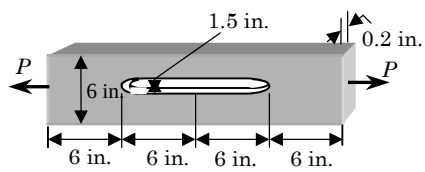

Fig. P4.29

Solution: The bar can be modeled, due to symmetry, using two elements, with lengths $h_1 = 6$in and $h_2 = 6$ in, and areas $A_1 = 0.9$ in^2 and $A_2 = 1.2$in^2. Thus, the assembled matrix is given by

$$E \begin{bmatrix} \frac{A_1}{h_1} & -\frac{A_1}{h_1} & 0 \\ -\frac{A_1}{h_1} & \frac{A_1}{h_1} + \frac{A_2}{h_2} & -\frac{A_2}{h_2} \\ 0 & -\frac{A_2}{h_2} & \frac{A_2}{h_2} \end{bmatrix} \begin{Bmatrix} U_1 \\ U_2 \\ U_3 \end{Bmatrix} = \begin{Bmatrix} P_1^{(1)} \\ P_2^{(1)} + P_1^{(2)} \\ P_1^{(2)} \end{Bmatrix}$$

or, in view of $P_2^{(1)} + P_1^{(2)} = 0$ and $P_1^{(2)} = P = 2,000$, we have

$$5 \times 10^6 \begin{bmatrix} 0.9 & -0.9 & 0 \\ -0.9 & 2.1 & -1.2 \\ 0 & -1.2 & 1.2 \end{bmatrix} \begin{Bmatrix} U_1 \\ U_2 \\ U_3 \end{Bmatrix} = \begin{Bmatrix} P_1^{(1)} \\ 0 \\ 2000 \end{Bmatrix}.$$

The displacements are $U_2 = 0.4444$ in and $U_3 = 1.9444$ in.

Problem 4.30: Repeat Problem 4.29 for the steel bar shown in Fig. P4.30.

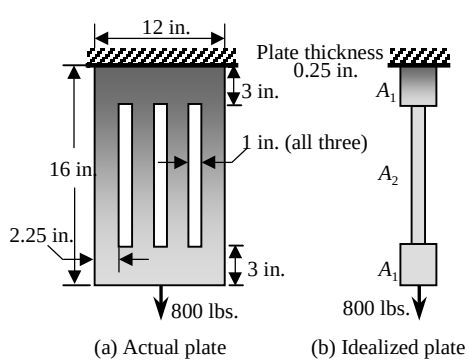

Fig. P4.30

PROPRIETARY MATERIAL. © The McGraw-Hill Companies, Inc. All rights reserved.

Solution: The assembled equations are

$$E_s \begin{bmatrix} \frac{A_1}{h_1} & -\frac{A_1}{h_1} & 0 & 0 \\ -\frac{A_1}{h_1} & \frac{A_1}{h_1}+\frac{A_2}{h_2} & -\frac{A_2}{h_2} & 0 \\ 0 & -\frac{A_2}{h_2} & \frac{A_2}{h_2}+\frac{A_1}{h_1} & \frac{A_1}{h_1} \\ 0 & 0 & -\frac{A_1}{h_1} & \frac{A_1}{h_1} \end{bmatrix} \begin{Bmatrix} U_1 \\ U_2 \\ U_3 \\ U_4 \end{Bmatrix} = \begin{Bmatrix} Q_1^1 \\ Q_2^1+Q_1^2 \\ Q_2^2+Q_1^3 \\ Q_2^3 \end{Bmatrix}$$

where $A_1 = 3$ in^2, $A_2 = 2.25$ in^2, $h_1 = 3$ in., and $h_2 = 10$in. The balance relations and boundary conditions are:

$$U_1 = 0,\ Q_2^1 + Q_1^2 = 0,\ Q_2^2 + Q_1^3 = 0,\ Q_2^3 = 800$$

The condensed equations are

$$30 \times 10^6 \begin{bmatrix} 1.225 & -0.225 & 0 \\ -0.225 & 1.225 & -1.0 \\ 0 & -1.0 & 1.0 \end{bmatrix} \begin{Bmatrix} U_2 \\ U_3 \\ U_4 \end{Bmatrix} = \begin{Bmatrix} 0 \\ 0 \\ 800 \end{Bmatrix}$$

The solution is given by

$$U_2 = 26.667 \times 10^{-6}\,\text{in.},\quad U_3 = 145.185 \times 10^{-6}\,\text{in.},\quad U_4 = 171.852 \times 10^{-6}\,\text{in.}$$

Problem 4.31: The aluminum and steel pipes shown in Fig. P4.31 are fastened to rigid supports at ends A and B and to a rigid plate C at their junction. Determine the displacement of point C and stresses in the aluminum and steel pipes. Use the minimum number of linear finite elements.

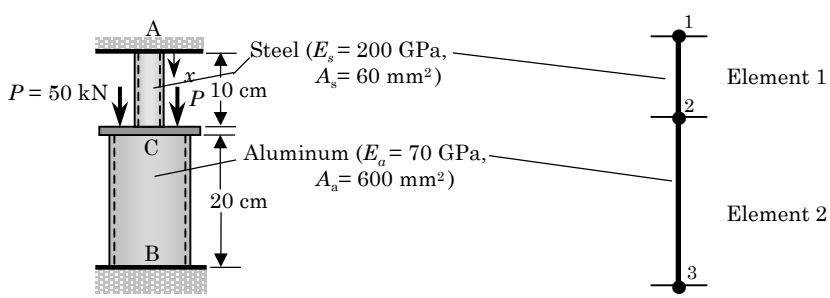

Fig. P4.31

Solution: Using two linear elements (steel being element 1), we obtain

$$\begin{bmatrix} \frac{E_sA_s}{h_1} & -\frac{E_sA_s}{h_1} & 0 \\ -\frac{E_sA_s}{h_1} & \frac{E_sA_s}{h_1}+\frac{E_aA_a}{h_2} & -\frac{E_aA_a}{h_2} \\ 0 & -\frac{E_aA_a}{h_2} & \frac{E_aA_a}{h_2} \end{bmatrix} \begin{Bmatrix} U_1 \\ U_2 \\ U_3 \end{Bmatrix} = \begin{Bmatrix} Q_1^{(1)} \\ Q_2^{(1)}+Q_1^{(2)} \\ Q_2^{(2)} \end{Bmatrix}$$

PROPRIETARY MATERIAL. ©The McGraw-Hill Companies, Inc. All rights reserved.

with $E_sA_s = 12 \times 10^6$ Pa-m, $E_aA_a = 42 \times 10^6$ Pa-m, $h_1 = 0.1$ m, and $h_2 = 0.2$ m.

Using the boundary conditions

$$U_1 = U_3 = 0, \qquad Q_2^{(1)} + Q_1^{(2)} = 2P = 100,000 \text{ N}$$

we obtain

$$U_2 = \frac{2P}{\frac{E_sA_s}{h_1} + \frac{E_aA_a}{h_2}} = \frac{100 \times 10^{-3}}{120 + 210} = \frac{1}{3300} \text{ m} = 0.3 \text{ mm}.$$

The forces and stresses in steel and aluminum pipes are

$$Q_2^{(1)} = \left(\frac{E_sA_s}{h_1}\right) U_2 = \frac{120 \times 10^6}{3300} = 36.364 \text{ kN}, \qquad \sigma_s = 606.06 \text{ MPa},$$
$$Q_2^{(2)} = -\left(\frac{E_aA_a}{h_2}\right) U_2 = -\frac{210 \times 10^6}{3300} = -63.636 \text{ kN}, \quad \sigma_a = -106.06 \text{ MPa}.$$

Note that $Q_1^{(1)} = -Q_2^{(1)}$ and $Q_1^{(2)} = -Q_2^{(2)}$. Hence, the force equilibrium is satisfied: $Q_1^{(1)} + Q_2^{(2)} + 2P = 0$.

Problem 4.32: A steel bar ABC is pin-supported at its upper end A to an immovable wall and loaded by a force F_1 at its lower end C, as shown in Fig. P4.32 A rigid horizontal beam BDE is pinned to the vertical bar at B, supported at point D, and carries a load F_2 at end E. Determine the displacements u_B and u_C at points B and C.

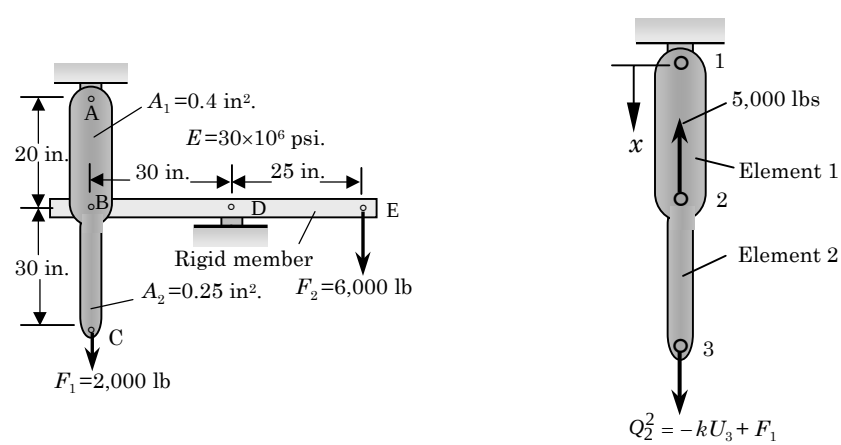

Fig. P4.32

Solution: First we must find the force acting at point B. Taking moments about point D of the free-body-diagram of member BDE gives a load of 6000(25/30) = 5000 lb upward at point B.

PROPRIETARY MATERIAL. ©The McGraw-Hill Companies, Inc. All rights reserved.

For the two-element mesh, we have (positive x is taken downward with origin at node 1)

$$E\begin{bmatrix} \frac{A_1}{h_1} & -\frac{A_1}{h_1} & 0 \\ -\frac{A_1}{h_1} & \frac{A_1}{h_1}+\frac{A_2}{h_2} & -\frac{A_2}{h_2} \\ 0 & -\frac{A_2}{h_2} & \frac{A_2}{h_2} \end{bmatrix}\begin{Bmatrix} U_1 \\ U_2 \\ U_3 \end{Bmatrix} = \begin{Bmatrix} Q_1^{(1)} \\ Q_2^{(1)}+Q_1^{(2)} \\ Q_2^{(2)} \end{Bmatrix}$$

with $A_1/h_1 = 0.02$ in. and $A_2/h_2 = 0.025/3$ in.

The boundary conditions are

$$U_1 = 0, \quad Q_2^{(1)} + Q_1^{(2)} = P = -5,000 \text{ lb}, \quad Q_2^{(2)} = 2,000 \text{ lb},$$

The condensed equations are

$$30 \times 10^6 \begin{bmatrix} 0.02 + 0.0083 & -0.0083 \\ -0.0083 & 0.0083 \end{bmatrix}\begin{Bmatrix} U_2 \\ U_3 \end{Bmatrix} = \begin{Bmatrix} -5,000 \\ 2,000 \end{Bmatrix}$$

whose solution is

$$U_2 = u_B = -0.005 \text{ in.}, \quad U_3 = u_C = 0.003 \text{ in.}$$

Problem 4.33: Repeat Problem 4.32 when point C is supported vertically by a spring ($k = 1,000$ lb/in).

Solution: The assembled equations are the same as given in the solution to Problem 4.31. The boundary conditions for the present problem are

$$U_1 = 0, \quad Q_2^{(1)} + Q_1^{(2)} = -5,000 \text{ lb}, \quad Q_2^{(2)} + kU_3 = F_1.$$

Hence, the condensed equations for the displacements become

$$30 \times 10^6 \begin{bmatrix} 0.02 + 0.0083 & -0.0083 \\ -0.0083 & 0.0083 + \frac{k}{E} \end{bmatrix}\begin{Bmatrix} U_2 \\ U_3 \end{Bmatrix} = \begin{Bmatrix} -5,000 \\ 2,000 \end{Bmatrix}$$

and for the forces

$$Q_1^{(1)} = -\frac{EA_1}{h_1}U_2, \quad Q_2^{(2)} = F_1 - kU_3$$

Problem 4.34: Consider the steel column (a typical column in a multi-storey building structure) shown in Fig. P4.34. The loads shown are due to the loads of different floors. The modulus of elasticity is $E = 30 \times 10^6$ psi and cross-sectional area of the column is $A = 40$ in^2. Determine the vertical displacements and axial stresses in the column at various floor-column connection points.

PROPRIETARY MATERIAL. ©The McGraw-Hill Companies, Inc. All rights reserved.

Solution: The assembled equations are

$$10^6 \begin{bmatrix} 8 & -8 & 0 & 0 & 0 \\ -8 & 16 & -8 & 0 & 0 \\ 0 & -8 & 16 & -8 & 0 \\ 0 & 0 & -8 & 16 & -8 \\ 0 & 0 & 0 & -8 & 8 \end{bmatrix} \begin{Bmatrix} U_1 \\ U_2 \\ U_3 \\ U_4 \\ U_5 \end{Bmatrix} = \begin{Bmatrix} Q_1^1 \\ Q_2^1 + Q_1^2 \\ Q_2^2 + Q_1^3 \\ Q_2^3 + Q_1^4 \\ Q_2^4 \end{Bmatrix}$$

Using the boundary condition $U_5 = 0$ and balance of forces,

$$Q_1^1 = 50,000, \quad Q_2^1 + Q_1^2 = 60,000, \quad Q_2^2 + Q_1^3 = 64,000, \quad Q_2^3 + Q_1^4 = 70,000$$

we obtain the following condensed equations:

$$10^6 \begin{bmatrix} 8 & -8 & 0 & 0 \\ -8 & 16 & -8 & 0 \\ 0 & -8 & 16 & -8 \\ 0 & 0 & -8 & 16 \end{bmatrix} \begin{Bmatrix} U_1 \\ U_2 \\ U_3 \\ U_4 \end{Bmatrix} = 10^3 \begin{Bmatrix} 50 \\ 60 \\ 64 \\ 70 \end{Bmatrix}$$

The displacements are (in inches)

$$U_1 = 0.122, \quad U_2 = 0.0915, \quad U_3 = 0.061, \quad U_4 = 0.0305$$

and the reaction force at node 5 is

$$Q_2^4 = -244,000 \text{ lb}$$

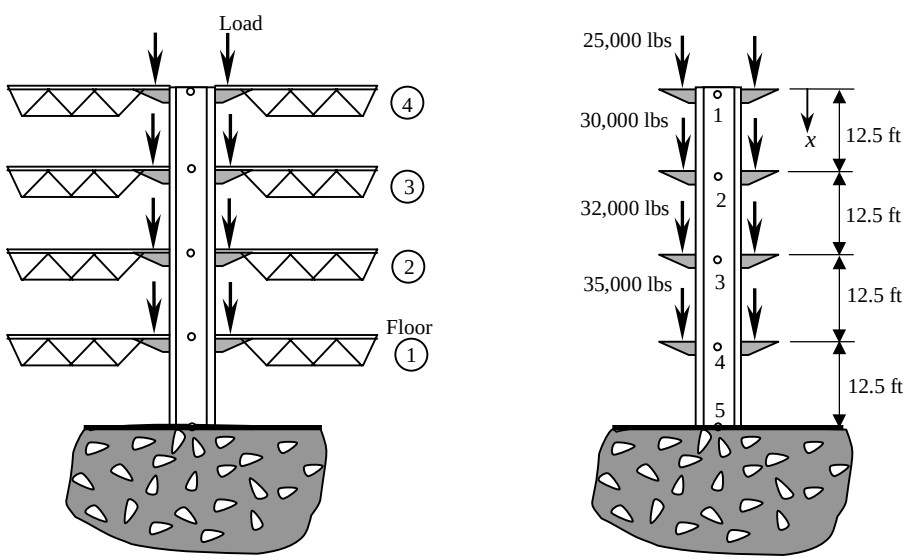

Fig. P4.34

PROPRIETARY MATERIAL. ©The McGraw-Hill Companies, Inc. All rights reserved.

Problem 4.35: The bending moment (M) and transverse deflection (w) in a beam according to the Euler–Bernoulli beam theory are related by

$$-EI\frac{d^2w}{dx^2} = M(x)$$

For statically determinate beams, one can readily obtain the expression for the bending moment in terms of the applied loads. Thus, $M(x)$ is a known function of x. Determine the maximum deflection of the simply supported beam under uniform load (see Fig. P4.35) using the finite element method.

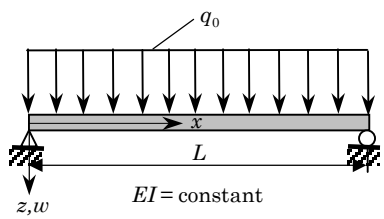

Fig. P4.35

Solution: Clearly, the element equations are given by

$$[K^e]\{w^e\} = \{f^e\} + \{Q^e\}$$

with

$$K^e_{ij} = \int_{x_a}^{x_b} \frac{d\psi_i}{dx}\frac{d\psi_j}{dx}\,dx, \quad f^e_i = \int_{x_a}^{x_b} f(x)\psi_i\,dx, \quad f(x) = \frac{M}{EI}$$

$$Q^e_1 = \left(-\frac{dw}{dx}\right)_{x_a}, \quad Q^e_2 = \left(\frac{dw}{dx}\right)_{x_b}$$

where ψ_i are the Lagrange interpolation functions. For the problem at hand, it is sufficient to model half beam (by symmetry) with one element. The bending moment is

$$M(x) = \frac{q_0}{2}\left(Lx - x^2\right)$$

Hence, the "source vector" becomes ($h = L/2$)

$$f^1_1 = \frac{q_0}{2EI}\int_0^h \left(1 - \frac{x}{h}\right)\left(Lx - x^2\right)dx = \frac{q_0 h^3}{8EI}$$

$$f^1_2 = \frac{q_0}{2EI}\int_0^h \frac{x}{h}\left(Lx - x^2\right)dx = \frac{5q_0 h^3}{24EI}$$

PROPRIETARY MATERIAL. ©The McGraw-Hill Companies, Inc. All rights reserved.

Thus, the one-element model (in half beam) gives

$$\frac{1}{h}\begin{bmatrix} 1 & -1 \\ -1 & 1 \end{bmatrix}\begin{Bmatrix} U_1 \\ U_2 \end{Bmatrix} = \frac{q_0 h^3}{24EI}\begin{Bmatrix} 3 \\ 5 \end{Bmatrix} + \begin{Bmatrix} Q_1^1 \\ Q_2^1 \end{Bmatrix}$$

Using the boundary conditions

$$w(0) = U_1 = 0, \quad \left(\frac{dw}{dx}\right)_{x=L/2} = Q_2^1 = 0$$

we obtain the condensed equation

$$U_2 = w(L/2) = \frac{5q_0 h^4}{24EI} = \frac{5q_0 L^4}{384EI}$$

which coincides with the exact value. The slope at the left end is given by

$$Q_1^1 = \left(-\frac{dw}{dx}\right)_{x=0} = -\frac{U_2}{h} - \frac{q_0 h^3}{8EI} = -\frac{q_0 L^3}{24EI}$$

which also coincides with the exact value.

Problem 4.36: Repeat Problem 4.35 for the cantilever beam shown in Fig. P4.36.

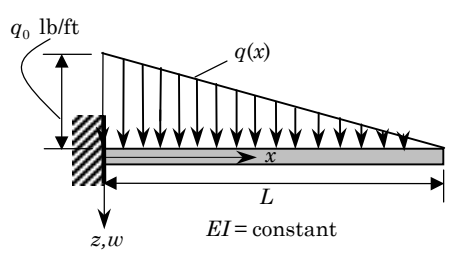

Fig. P4.36

Solution: We can use one element model to determine the maximum deflection. Taking, for convenience, the x-axis to the left from the free end of the beam, we can write

$$f(x) = \frac{M}{EI} = -\frac{1}{EI}\frac{q_0 x^3}{6L}$$

Then

$$f_1^1 = -\frac{q_0}{6EIL}\int_0^L \left(1 - \frac{x}{L}\right) x^3 \, dx = -\frac{q_0 L^3}{120EI}$$

$$f_2^1 = -\frac{q_0}{6EIL}\int_0^L \frac{x}{L} x^3 \, dx = -\frac{q_0 L^3}{30EI}$$

PROPRIETARY MATERIAL. ©The McGraw-Hill Companies, Inc. All rights reserved.

The one-element model gives

$$\frac{1}{L}\begin{bmatrix} 1 & -1 \\ -1 & 1 \end{bmatrix}\begin{Bmatrix} U_1 \\ U_2 \end{Bmatrix} = -\frac{q_0 L^3}{120EI}\begin{Bmatrix} 1 \\ 4 \end{Bmatrix} + \begin{Bmatrix} Q_1^1 \\ Q_2^1 \end{Bmatrix}$$

The boundary conditions of the problem are (note the unsual situation of both primary and secondary variable being specified at the same point)

$$w(L) = U_2 = 0, \quad \left(\frac{dw}{dx}\right)_{x=L} = Q_2^1 = 0$$

Consequently, we have

$$\frac{1}{L}\begin{bmatrix} 1 & -1 \\ -1 & 1 \end{bmatrix}\begin{Bmatrix} U_1 \\ 0 \end{Bmatrix} = -\frac{q_0 L^3}{120EI}\begin{Bmatrix} 1 \\ 4 \end{Bmatrix} + \begin{Bmatrix} Q_1^1 \\ 0 \end{Bmatrix}$$

from which we obtain

$$U_1 = w(0) = \frac{q_0 L^4}{30EI}, \quad Q_1^1 = \frac{q_0 L^3}{30EI} + \frac{q_0 L^3}{120EI} = \frac{q_0 L^3}{24EI}$$

which coincide with the exact values.

Problem 4.37: Turbine disks are often thick near their hub and taper down to a smaller thickness at the periphery. The equation governing a variable-thickness $t = t(r)$ disk is

$$\frac{d}{dr}(rt\sigma_r) - t\sigma_\theta + t\rho\omega^2 r^2 = 0$$

where ω^2 is the angular speed of the disk and

$$\sigma_r = c\left(\frac{du}{dr} + \nu\frac{u}{r}\right), \quad \sigma_\theta = c\left(\frac{u}{r} + \nu\frac{du}{dr}\right), \quad c = \frac{E}{1-\nu^2}$$

(a) Construct the weak integral form of the governing equation such that the bilinear form is symmetric and the natural boundary condition involves specifying the quantity $tr\sigma_r$.

(b) Develop the finite element model associated with the weak form derived in part (a).

Solution: (a) The weak form is given by

$$\begin{aligned} 0 &= \int_{r_a}^{r_b} w\left[-\frac{1}{r}\frac{d}{dr}(tr\sigma_r) + \frac{t\sigma_\theta}{r} - f_0\right] rdrd\theta \\ &= 2\pi\int_{r_a}^{r_b}\left(tr\frac{dw}{dr}\sigma_r + wt\sigma_\theta - wf_0 r\right) dr - Q_a w(r_a) - Q_b w(r_b) \qquad (1a) \end{aligned}$$

PROPRIETARY MATERIAL. ©The McGraw-Hill Companies, Inc. All rights reserved.

where

$$f_0 = t\rho\omega^2 r,\ Q_a \equiv 2\pi(-tr\sigma_r)_a,\ Q_b \equiv 2\pi(tr\sigma_r)_b \tag{1b}$$

(b) The finite element model is given by

$$[K^e]\{u^e\} = \{F^e\} \quad \text{or} \quad \mathbf{K}^e\mathbf{u}^e = \mathbf{F}^e \tag{2a}$$

where

$$K^e_{ij} = 2\pi \int_{r_a}^{r_b} ct\left[r\frac{d\psi_i}{dr}\left(\frac{d\psi_j}{dr} + \frac{\nu}{r}\psi_j\right) + \psi_i\left(\frac{1}{r}\psi_j + \nu\frac{d\psi_j}{dr}\right)\right] dr$$
$$F^e_i = 2\pi \int_{r_a}^{r_b} f_0\psi_i\ rdr + Q_a\psi_i(r_a) + Q_b\psi_i(r_b) \tag{2b}$$

Problems 4.38–4.44: For the plane truss structures shown in Figs. P4.38–P4.44, give (a) the transformed element matrices, (b) the assembled element matrices, and (c) the condensed matrix equations for the unknown displacements and forces.

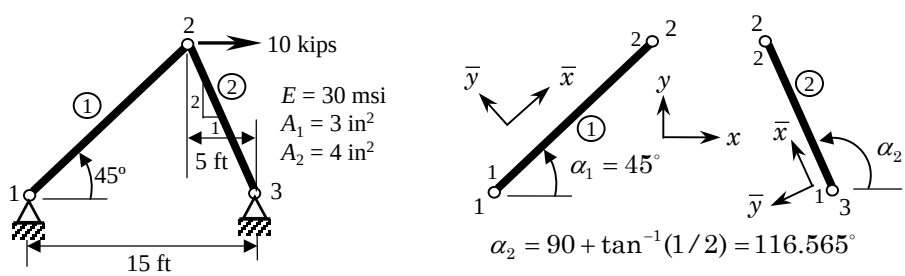

Figure P4.38

Solution of Problem 4.38: The element matrices $[K^1]$ and $[K^2]$ for the two elements are given by Eq. (4.6.9) by substituting ($\sin\theta_1 = \cos\theta_1 = 1/\sqrt{2}$) for element 1 and ($\sin\theta_2 = 0.8944, \cos\theta_2 = -0.4472$) for element 2. We have

$$[K^1] = 10^6 \begin{bmatrix} 0.26516 & 0.26516 & -0.26516 & -0.26516 \\ 0.26516 & 0.26516 & -0.26516 & -0.26516 \\ -0.26516 & -0.26516 & 0.26516 & 0.26516 \\ -0.26516 & -0.26516 & 0.26516 & 0.26516 \end{bmatrix}$$

$$[K^2] = 10^6 \begin{bmatrix} 0.17887 & -0.35775 & -0.17887 & 0.35775 \\ -0.35775 & 0.71550 & 0.35775 & -0.71550 \\ -0.17887 & 0.35775 & 0.17887 & -0.35775 \\ 0.35775 & -0.71550 & -0.35775 & 0.71550 \end{bmatrix}$$

PROPRIETARY MATERIAL. ©The McGraw-Hill Companies, Inc. All rights reserved.

The assembled stiffness matrix is given by

$$\begin{bmatrix} K_{11}^1 & K_{12}^1 & K_{13}^1 & K_{14}^1 & 0 & 0 \\ K_{21}^1 & K_{22}^1 & K_{23}^1 & K_{24}^1 & 0 & 0 \\ K_{31}^1 & K_{32}^1 & K_{33}^1 + K_{11}^2 & K_{34}^1 + K_{12}^2 & K_{13}^2 & K_{14}^2 \\ K_{41}^1 & K_{42}^1 & K_{43}^1 + K_{21}^2 & K_{44}^1 + K_{22}^2 & K_{23}^2 & K_{24}^2 \\ 0 & 0 & K_{31}^2 & K_{32}^2 & K_{33}^2 & K_{34}^2 \\ 0 & 0 & K_{41}^2 & K_{42}^2 & K_{43}^2 & K_{44}^2 \end{bmatrix} =$$

$$10^6 \begin{bmatrix} 0.26516 & 0.26516 & -0.26516 & -0.26516 & 0 & 0 \\ 0.26516 & 0.26516 & -0.26516 & -0.26516 & 0 & 0 \\ -0.26516 & -0.26516 & 0.44403 & -0.09259 & -0.17887 & 0.35775 \\ -0.26516 & -0.26516 & -0.09259 & 0.98066 & 0.35775 & -0.71550 \\ 0 & 0 & -0.17887 & 0.35775 & 0.17887 & -0.35775 \\ 0 & 0 & 0.35775 & -0.71550 & -0.35775 & 0.71550 \end{bmatrix}$$

The force vector is given by ($Q_3^1 + Q_1^2 = P$ and $Q_4^1 + Q_2^2 = 0$)

$$\{F\} = \begin{Bmatrix} Q_1^1 \\ Q_2^1 \\ P \\ 0 \\ Q_3^2 \\ Q_4^2 \end{Bmatrix}$$

The condensed equations are,

$$10^6 \begin{bmatrix} 0.44403 & -0.09259 \\ -0.09259 & 0.98066 \end{bmatrix} \begin{Bmatrix} U_3 \\ U_4 \end{Bmatrix} = \begin{Bmatrix} P \\ 0 \end{Bmatrix}$$

The solution of these equations is given by ($P = 10^4$),

$$U_3 = 0.022973 \text{ in.}, \quad U_4 = 0.002169 \text{ in.}$$

The reactions at the supports (along the axis of the members) can be computed from the equations,

$$\begin{Bmatrix} F_1^x = Q_1^1 \\ F_1^y = Q_2^1 \\ F_3^x = Q_3^2 \\ F_3^y = Q_4^2 \end{Bmatrix} = 10^6 \begin{bmatrix} -0.26516 & -0.26516 \\ -0.26516 & -0.26516 \\ -0.17887 & 0.35775 \\ 0.35775 & -0.71550 \end{bmatrix} \begin{Bmatrix} U_3 \\ U_4 \end{Bmatrix} = \begin{Bmatrix} -6,667 \\ -6,667 \\ -3,333 \\ 6,667 \end{Bmatrix}$$

Note that these are the components of forces in the global coordinate system (i.e., horizontal and vertical components) at global nodes 1 and 2. When resolved along the axis of the member, these would give the member axial forces (in element coordinates):

$$\bar{Q}_1^1 = -9,428 \text{ lbs.}, \quad \bar{Q}_3^2 = -7,453 \text{ lbs.}$$

PROPRIETARY MATERIAL. ©The McGraw-Hill Companies, Inc. All rights reserved.

The forces transverse to each member (i.e., $\bar{Q}_2^1$ and $\bar{Q}_4^2$) would be zero (as they should for any *truss* element). The nodal forces at the other node of each element are equal and opposite to the values given above.

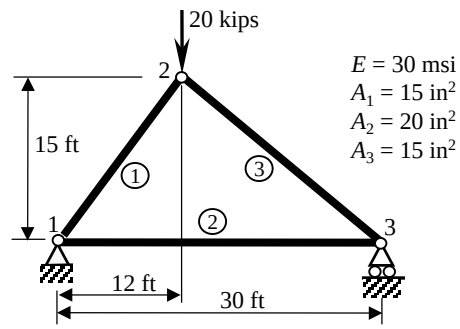

Figure P4.39

Solution of Problem 4.39: First we note that

$$h_1 = 19.21 \text{ ft}, \quad h_2 = 30 \text{ ft}, \quad h_3 = 23.43 \text{ ft}$$

$$\cos\theta_1 = \frac{12}{19.21} = 0.6247, \quad \sin\theta_1 = \frac{15}{19.21} = 0.7809, \quad \cos\theta_2 = 1, \quad \sin\theta_2 = 0$$

$$\cos\theta_3 = -\frac{18}{23.43} = -0.7682, \quad \sin\theta_3 = \frac{15}{23.43} = 0.6402$$

The element stiffness matrices are

$$[K^1] = 10^6 \begin{bmatrix} 0.7618 & 0.9523 & -0.7618 & -0.9523 \\ 0.9523 & 1.1904 & -0.9523 & -1.1904 \\ -0.7618 & -0.9523 & 0.7618 & 0.9523 \\ -0.9523 & -1.1904 & 0.9523 & 1.1904 \end{bmatrix}$$

$$[K^2] = 10^6 \begin{bmatrix} 1.6667 & 0.0000 & -1.6667 & 0.0000 \\ 0.0000 & 0.0000 & 0.0000 & 0.0000 \\ -1.6667 & 0.0000 & 1.6667 & 0.0000 \\ 0.0000 & 0.0000 & 0.0000 & 0.0000 \end{bmatrix}$$

$$[K^3] = 10^6 \begin{bmatrix} 0.9445 & -0.7871 & -0.9445 & 0.7871 \\ -0.7871 & 0.6560 & 0.7871 & -0.6560 \\ -0.9445 & 0.7871 & 0.9445 & -0.7871 \\ 0.7871 & -0.6560 & -0.7871 & 0.6560 \end{bmatrix}$$

The assembled stiffness matrix is

$$[K] = 10^6 \begin{bmatrix} 2.4285 & 0.9523 & -0.7618 & -0.9523 & -1.6667 & 0.0000 \\ 0.9523 & 1.1904 & -0.9523 & -1.1904 & 0.0000 & 0.0000 \\ -0.7618 & -0.9523 & 1.7063 & 0.1652 & -0.9445 & 0.7871 \\ -0.9523 & -1.1904 & 0.1652 & 1.8463 & 0.7871 & -0.6560 \\ -1.6667 & 0.0000 & -0.9445 & 0.7871 & 2.6111 & -0.7871 \\ 0.0000 & 0.0000 & 0.7871 & -0.6560 & -0.7871 & 0.6560 \end{bmatrix}$$

PROPRIETARY MATERIAL. ©The McGraw-Hill Companies, Inc. All rights reserved.

The boundary conditions are

$$U_1 = U_2 = U_6 = 0, \quad Q_3^1 + Q_1^3 = 0, \quad Q_4^1 + Q_2^3 = -20,000$$

The condensed equations are

$$10^6 \begin{bmatrix} 1.7063 & 0.1652 & -0.9445 \\ 0.1652 & 1.8463 & 0.7871 \\ -0.9445 & 0.7871 & 2.6111 \end{bmatrix} \begin{Bmatrix} U_3 \\ U_4 \\ U_5 \end{Bmatrix} = \begin{Bmatrix} 0 \\ -20,000 \\ 0 \end{Bmatrix}$$

The solution is

$$U_3 = 0.0045 \text{ in}, \quad U_4 = -0.0137 \text{ in}, \quad U_5 = 0.0058 \text{ in}$$
$$Q_1^1 + Q_1^2 = 0 \text{ lb}, \quad Q_2^1 + Q_2^2 = 12,000 \text{ lb}, \quad Q_4^2 + Q_4^3 = 8,000 \text{ lb}$$
$$\bar{Q}_1^1 = 15,370 \text{ lb}, \quad \bar{Q}_1^2 = -9,600 \text{ lb}, \quad \bar{Q}_1^3 = 12,500 \text{ lb}$$

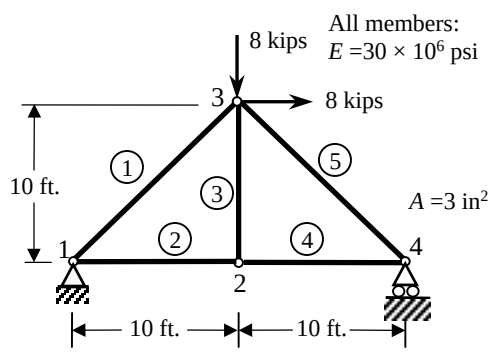

Figure P4.40

Solution of Problem 4.40: This problem involves 5 members and it is hard to be solved by hand. The main point should be to give the specified displacements and forces on the structure. We have

$$U_1 = U_2 = U_8 = 0, \; F_5 = 8,000 \text{ lbs.}, \; F_6 = -8,000 \text{ lbs.}$$

The connectivity of the elements is defined by the matrix

$$[B] = \begin{bmatrix} 1 & 3 \\ 1 & 2 \\ 2 & 3 \\ 2 & 4 \\ 4 & 3 \end{bmatrix}$$

The angle of orientation of each member are (CCW):

$$\theta_1 = 45^\circ, \; \theta_2 = 0^\circ, \; \theta_3 = 90^\circ, \; \theta_4 = 0^\circ, \; \theta_5 = 315^\circ$$

PROPRIETARY MATERIAL. ©The McGraw-Hill Companies, Inc. All rights reserved.

The element stiffness matrices are

$$[K^1] = 10^6 \begin{bmatrix} 0.2652 & 0.2652 & -0.2652 & -0.2652 \\ 0.2652 & 0.2652 & -0.2652 & -0.2652 \\ -0.2652 & -0.2652 & 0.2652 & 0.2652 \\ -0.2652 & -0.2652 & 0.2652 & 0.2652 \end{bmatrix}$$

$$[K^2] = 10^6 \begin{bmatrix} 0.7500 & 0.0000 & -0.7500 & 0.0000 \\ 0.0000 & 0.0000 & 0.0000 & 0.0000 \\ -0.7500 & 0.0000 & 0.7500 & 0.0000 \\ 0.0000 & 0.0000 & 0.0000 & 0.0000 \end{bmatrix}$$

$$[K^3] = 10^6 \begin{bmatrix} 0.0000 & 0.0000 & 0.0000 & 0.0000 \\ 0.0000 & 0.7500 & 0.0000 & -0.7500 \\ 0.0000 & 0.0000 & 0.0000 & 0.0000 \\ 0.0000 & -0.7500 & 0.0000 & 0.7500 \end{bmatrix}$$

$$[K^4] = 10^6 \begin{bmatrix} 0.7500 & 0.0000 & -0.7500 & 0.0000 \\ 0.0000 & 0.0000 & 0.0000 & 0.0000 \\ -0.7500 & 0.0000 & 0.7500 & 0.0000 \\ 0.0000 & 0.0000 & 0.0000 & 0.0000 \end{bmatrix}$$

$$[K^5] = 10^6 \begin{bmatrix} 0.2652 & -0.2652 & -0.2652 & 0.2652 \\ -0.2652 & 0.2652 & 0.2652 & -0.2652 \\ -0.2652 & 0.2652 & 0.2652 & -0.2652 \\ 0.2652 & -0.2652 & -0.2652 & 0.2652 \end{bmatrix}$$

The generalized displacements calculated using FEM1D are

$$U_3 = 0.0107\,\text{in.},\ U_4 = -0.0257\,\text{in.},\ U_5 = 0.0257\,\text{in.}$$
$$U_6 = -0.0257\,\text{in.},\ U_7 = 0.0213\,\text{in.}$$

The axial forces in the members are (subscripts denote the global node numbers; i.e., F_{ij} denotes the tensile force in the member connecting global nodes i and j):

$$F_{12} = 8 \text{ kips},\ F_{13} = 0 \text{ kips},\ F_{23} = 0 \text{ kips},\ F_{24} = -8 \text{ kips},\ F_{34} = \sqrt{2} \times 8 \text{ kips}$$

These can be easily verified using the "method of sections" for this determinate structure.

Solution of Problem 4.41: The angle of orientation of each member are (CCW):

$$\theta_1 = 0^\circ,\ \theta_2 = 90^\circ,\ \theta_3 = 45^\circ$$

PROPRIETARY MATERIAL. ©The McGraw-Hill Companies, Inc. All rights reserved.

The element stiffness matrices are

$$[K^1] = \frac{EA}{L}\begin{bmatrix} 1.0 & 0.0 & -1.0 & 0.0 \\ 0.0 & 0.0 & 0.0 & 0.0 \\ -1.0 & 0.0 & 1.0 & 0.0 \\ 0.0 & 0.0 & 0.0 & 0.0 \end{bmatrix}$$

$$[K^2] = \frac{EA}{L}\begin{bmatrix} 0.0 & 0.0 & 0.0 & 0.0 \\ 0.0 & 1.0 & 0.0 & -1.0 \\ 0.0 & 0.0 & 0.0 & 0.0 \\ 0.0 & -1.0 & 0.0 & 1.0 \end{bmatrix}$$

$$[K^3] = \frac{EA}{L}\begin{bmatrix} 0.3536 & 0.3536 & -0.3536 & -0.3536 \\ 0.3536 & 0.3536 & -0.3536 & -0.3536 \\ -0.3536 & -0.3536 & 0.3536 & 0.3536 \\ -0.3536 & -0.3536 & 0.3536 & 0.3536 \end{bmatrix}$$

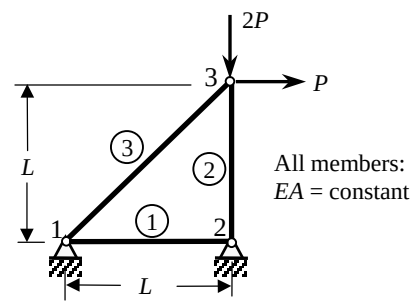

Figure P4.41

The assembled stiffness matrix is

$$[K] = \frac{EA}{L}\begin{bmatrix} 1.3536 & 0.3536 & -1.0 & 0.0 & -0.3536 & -0.3536 \\ 0.3536 & 0.3536 & 0.0 & 0.0 & -0.3536 & -0.3536 \\ -1.0000 & 0.0000 & 1.0 & 0.0 & 0.0000 & 0.0000 \\ 0.0000 & 0.0000 & 0.0 & 1.0 & 0.0000 & -1.0000 \\ -0.3536 & -0.3536 & 0.0 & 0.0 & 0.3536 & 0.3536 \\ -0.3536 & -0.3536 & 0.0 & -1.0 & 0.3536 & 1.3536 \end{bmatrix}$$

The boundary conditions are

$$U_1 = U_2 = U_3 = U_4 = 0,\ F_5 = P \text{ kips},\ F_6 = -2P \text{ kips}$$

The generalized displacements calculated using FEM1D are (in inches)

$$U_5 = 5.828\,\frac{PL}{EA},\ U_6 = 3.0\,\frac{PL}{EA}$$

PROPRIETARY MATERIAL. ©The McGraw-Hill Companies, Inc. All rights reserved.

The reaction forces at the supports in the x- and y-directions are (superscripts refer to global node numbers)

$$F_x^1 = -P \text{ kips}, \quad F_y^1 = -P \text{ kips}, \quad F_x^2 = 0 \text{ kips}, \quad F_y^2 = 3P \text{ kips}$$

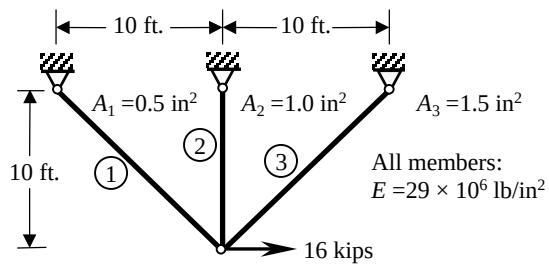

Figure P4.42

Solution of Problem 4.42: The angle of orientation of each member are (CCW):

$$\theta_1 = 135^\circ, \ \theta_2 = 90^\circ, \ \theta_3 = 45^\circ$$

The element stiffness matrices are

$$[K^1] = \frac{EA}{10L}\begin{bmatrix} 1.7675 & -1.7675 & -1.7675 & 1.7675 \\ -1.7675 & 1.7675 & 1.7675 & -1.7675 \\ -1.7675 & 1.7675 & 1.7675 & -1.7675 \\ 1.7675 & -1.7675 & -1.7675 & 1.7675 \end{bmatrix}$$

$$[K^2] = \frac{EA}{L}\begin{bmatrix} 0.0 & 0.0 & 0.0 & 0.0 \\ 0.0 & 1.0 & 0.0 & -1.0 \\ 0.0 & 0.0 & 0.0 & 0.0 \\ 0.0 & -1.0 & 0.0 & 1.0 \end{bmatrix}$$

$$[K^3] = \frac{EA}{10L}\begin{bmatrix} 5.3025 & 5.3025 & -5.3025 & -5.3025 \\ 5.3025 & 5.3025 & -5.3025 & -5.3025 \\ -5.3025 & -5.3025 & 5.3025 & 5.3025 \\ -5.3025 & -5.3025 & 5.3025 & 5.3025 \end{bmatrix}$$

The assembled stiffness matrix is (symmetric)

$$[K] = \frac{EA}{L}\begin{bmatrix} 0.707 & 0.353 & -0.177 & 0.177 & 0.000 & 0.000 & -0.530 & -0.530 \\ & 1.707 & 0.177 & -0.177 & 0.000 & -1.000 & -0.530 & -0.530 \\ & & 0.177 & -0.177 & 0.000 & 0.000 & 0.000 & 0.000 \\ & & & 0.177 & 0.000 & 0.000 & 0.000 & 0.000 \\ & & & & 0.000 & 0.000 & 0.000 & 0.000 \\ & & & & & 1.000 & 0.000 & 0.000 \\ & & & & & & 0.530 & 0.530 \\ & & & & & & & 0.530 \end{bmatrix}$$

PROPRIETARY MATERIAL. ©The McGraw-Hill Companies, Inc. All rights reserved.

The boundary conditions are

$$U_3 = U_4 = U_5 = U_6 = U_7 = U_8 = 0,\ F_1 = P = 16 \text{ kips},\ F_2 = 0 \text{ kips}$$

The generalized displacements calculated using FEM1D are (in inches)

$$U_1 = 1.5778\ \frac{PL}{EA},\ U_6 = -0.3267\ \frac{PL}{EA}$$

The member axial forces are (superscripts refer to element numbers; -ve is compressive)

$$F^1 = 7.616 \text{ kips},\quad F^2 = 5.228 \text{ kips},\quad F^3 = -15.01 \text{ kips}$$

Problem 4.43: Determine the forces and displacements of points B and C of the structure shown in Fig. P4.43.

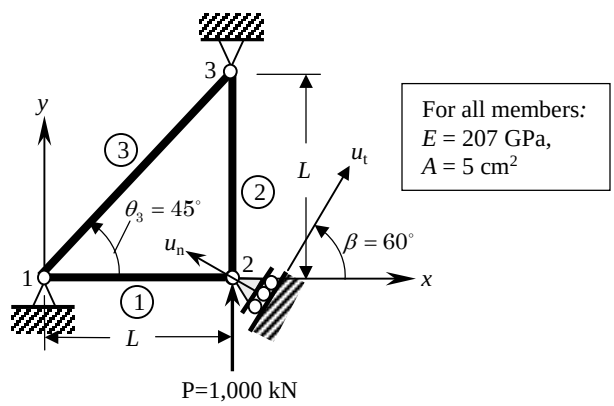

Figure P4.43

Solution of Problem 4.43: We wish to express the global displacements at node 2 in terms of the local displacements so that we can readily impose the boundary conditions on the local displacement components. Then the transformed equations are given by

$$\bar{\mathbf{K}}\bar{\mathbf{U}} = \bar{\mathbf{F}}$$

where

$$\bar{\mathbf{K}} = \mathbf{T}\mathbf{K}\mathbf{T}^{\mathrm{T}},\quad \bar{\mathbf{F}} = \mathbf{T}\mathbf{F},\quad \bar{\mathbf{U}} = \mathbf{T}^{\mathrm{T}}\mathbf{U}$$

and

$$[T] = \begin{bmatrix} [I] & [0] & [0] \\ [0] & [A] & [0] \\ [0] & [0] & [I] \end{bmatrix},\quad [A] = \begin{bmatrix} \cos 60 & \sin 60 \\ -\sin 60 & \cos 60 \end{bmatrix}$$

PROPRIETARY MATERIAL. ©The McGraw-Hill Companies, Inc. All rights reserved.

The element stiffness matrices are

$$[K^1] = 10^9 \begin{bmatrix} 0.1035 & 0.0000 & -0.1035 & 0.0000 \\ 0.0000 & 0.0000 & 0.0000 & 0.0000 \\ -0.1035 & 0.0000 & 0.1035 & 0.0000 \\ 0.0000 & 0.0000 & 0.0000 & 0.0000 \end{bmatrix}$$

$$[K^2] = 10^9 \begin{bmatrix} 0.0 & 0.0000 & 0.0 & 0.0000 \\ 0.0 & 0.1035 & 0.0 & -0.1035 \\ 0.0 & 0.0000 & 0.0 & 0.0000 \\ 0.0 & -0.1035 & 0.0 & 0.1035 \end{bmatrix}$$

$$[K^3] = 10^8 \begin{bmatrix} 0.3659 & 0.3659 & -0.3659 & -0.3659 \\ 0.3659 & 0.3659 & -0.3659 & -0.3659 \\ -0.3659 & -0.3659 & 0.3659 & 0.3659 \\ -0.3659 & -0.3659 & 0.3659 & 0.3659 \end{bmatrix}$$

The transformed global stiffness matrix is

$$10^8 \begin{bmatrix} 1.4009 & 0.3659 & -0.5175 & 0.8963 & -0.3659 & 0.3659 \\ & 0.3659 & 0.0000 & 0.0000 & -0.3659 & -0.3659 \\ & & 1.0350 & 0.0000 & 0.0000 & -0.8963 \\ & & & 1.0350 & 0.0000 & -0.5175 \\ & & & & 0.3659 & 0.3659 \\ & & & & & 1.4009 \end{bmatrix}$$

The boundary conditions are

$$U_1 = \bar{U}_1 = 0, \quad U_2 = \bar{U}_2 = 0, \quad U_{2y'} = \bar{U}_4 = 0, \quad U_5 = \bar{U}_5 = 0, \quad U_6 = \bar{U}_6 = 0$$

$$F_{2x'} = \bar{F}_3 = 0.866 \times 10^6$$

The solution of the condensed equation is

$$\bar{U}_3 = U_{2x'} = \frac{0.866 \times 10^6}{1.0350 \times 10^8} = 0.8367 \times 10^{-2} \text{ m}$$

Problem 4.44: Determine the forces and elongations of each bar in the structure shown in Fig. P4.44.

Solution of Problem 4.44: The element stiffness matrices are the same as in Problem 4.41. The transformed global stiffness matrix is

$$10^8 \begin{bmatrix} 1.4009 & 0.3659 & -1.0350 & 0.0000 & -0.5175 & 0.0000 \\ & 0.3659 & 0.0000 & 0.0000 & -0.5175 & 0.0000 \\ & & 1.0350 & 0.0000 & 0.0000 & 0.0000 \\ & & & 1.0350 & -0.7319 & -0.7319 \\ & & & & 1.2493 & 0.5175 \\ & & & & & 0.5175 \end{bmatrix}$$

PROPRIETARY MATERIAL. © The McGraw-Hill Companies, Inc. All rights reserved.

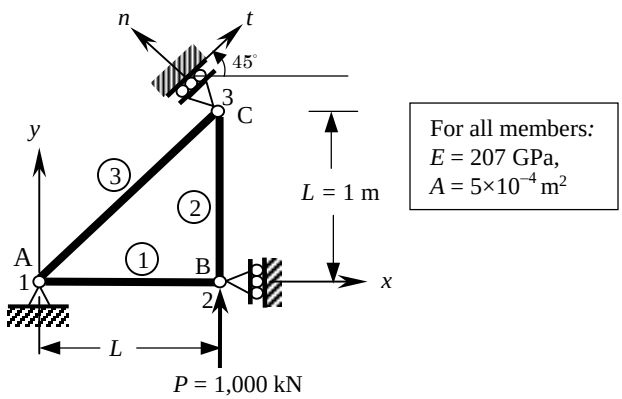

Figure P4.44

The boundary conditions are

$$U_1 = \bar{U}_1 = 0, \quad U_2 = \bar{U}_2 = 0, \quad U_4 = \bar{U}_4 = 0, \quad U_{6y'} = \bar{U}_6 = 0$$

$$F_4 = \bar{F}_4 = 1.0 \times 10^6$$

The solution of the condensed equations is

$$\bar{U}_4 = U_4 = 1.649 \times 10^{-2} \text{ m}, \quad \bar{U}_5 = U_{3x'} = 0.966 \times 10^{-2} \text{ m}$$

Problem 4.45: Determine the forces, elongations and stresses in each bar in the structure shown in Fig. P4.45. Also, determine the vertical displacements of points A and D.

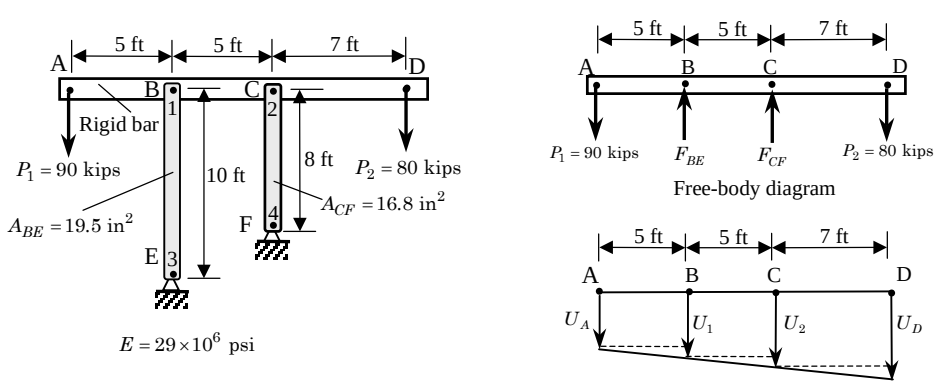

Figure P4.45

PROPRIETARY MATERIAL. © The McGraw-Hill Companies, Inc. All rights reserved.

Solution: This is a statically determinate problem; that is, the forces at points B and C can be readily determined from statics. Using the free-body-diagram of the rigid bar ABCD, we obtain

$$\sum M_B = 0: \quad 90 \times 5 + F_{CF} \times 5 - 80 \times 12 = 0 \rightarrow F_{CF} = 102 \text{ kips}$$
$$\sum M_C = 0: \quad 90 \times 10 - F_{BE} \times 5 - 80 \times 7 = 0 \rightarrow F_{BE} = 68 \text{ kips}$$

If we use two linear finite elements to represent the bars CF and BE, the assembled matrix of the structure is given by

$$\begin{array}{c} \\ 1 \\ 2 \\ 3 \\ 4 \end{array} \begin{array}{c} \begin{array}{cccc} 1 & 2 & 3 & 4 \end{array} \\ \begin{bmatrix} k_1 & 0 & -k_1 & 0 \\ 0 & k_2 & 0 & -k_2 \\ -k_1 & 0 & k_1 & 0 \\ 0 & -k_2 & 0 & k_2 \end{bmatrix} \end{array} \begin{Bmatrix} U_1 \\ U_2 \\ U_3 \\ U_4 \end{Bmatrix} = \begin{Bmatrix} Q_1^1 \\ Q_1^2 \\ Q_2^1 \\ Q_2^2 \end{Bmatrix}$$

where

$$k_1 = \frac{EA_{BE}}{h_1} = \frac{(29 \times 10^6)(19.5)}{120} = 4.7125 \times 10^6 \text{ lb/in}$$
$$k_2 = \frac{EA_{CF}}{h_2} = \frac{(29 \times 10^6)(16.8)}{96} = 5.075 \times 10^6 \text{ lb/in}$$

The assembled equations are

$$10^6 \begin{bmatrix} 4.7125 & 0 & -4.7125 & 0 \\ 0 & 5.0750 & 0 & -5.0750 \\ -4.7125 & 0 & 4.7125 & 0 \\ 0 & -5.0750 & 0 & 5.0750 \end{bmatrix} \begin{Bmatrix} U_1 \\ U_2 \\ U_3 \\ U_4 \end{Bmatrix} = \begin{Bmatrix} Q_1^1 \\ Q_1^2 \\ Q_2^1 \\ Q_2^2 \end{Bmatrix}$$

The boundary conditions of the problem are

$$U_3 = U_4 = 0; \quad Q_1^1 = F_{BE} = 68 \times 10^3 \text{ lb}, \quad Q_1^2 = F_{CF} = 102 \times 10^3 \text{ lb}$$

Hence, the condensed equations are given by

$$10^6 \begin{bmatrix} 4.7125 & 0 \\ 0 & 5.0750 \end{bmatrix} \begin{Bmatrix} U_1 \\ U_2 \end{Bmatrix} = 10^3 \begin{Bmatrix} 68 \\ 102 \end{Bmatrix}$$

whose solution is (compressions of the bars)

$$U_1 = 0.01443 \text{ (in)}, \quad U_2 = 0.02010 \text{ (in)}$$

By similarity of triangles, we can determine the displacement of points A and D. We have

$$U_A = U_1 - (U_2 - U_1) = 0.00876 \text{ in. downward}$$
$$U_D = U_2 + \frac{7}{5}(U_2 - U_1) = 0.0280 \text{ (in) downward}$$

PROPRIETARY MATERIAL. ©The McGraw-Hill Companies, Inc. All rights reserved.

The stresses in bars BE and CF are

$$\sigma_{BE} = \frac{F_{BE}}{A_{BE}} = \frac{68 \times 10^3}{19.5} = 3,487.2 \text{ psi}$$
$$\sigma_{CF} = \frac{F_{CF}}{A_{CF}} = \frac{102 \times 10^3}{16.8} = 6,071.4 \text{ psi}$$

Problem 4.46: Determine the forces and elongations of each bar in the structure shown in Fig. P4.45 when end A is pinned to a rigid wall (and P_1 is removed).

Solution: From Problem 4.45, the assembled equations are

$$10^6 \begin{bmatrix} 4.7125 & 0 & -4.7125 & 0 \\ 0 & 5.0750 & 0 & -5.0750 \\ -4.7125 & 0 & 4.7125 & 0 \\ 0 & -5.0750 & 0 & 5.0750 \end{bmatrix} \begin{Bmatrix} U_1 \\ U_2 \\ U_3 \\ U_4 \end{Bmatrix} = \begin{Bmatrix} Q_1^1 \\ Q_1^2 \\ Q_2^1 \\ Q_2^2 \end{Bmatrix}$$

The boundary and constraint conditions of the problem are

$$U_3 = U_4 = 0; \quad U_1 - 0.5U_2 = 0$$

The transformation equation between (U_1, U_2, U_3, U_4) and $(U_2, U_3, U_4)$is ($M = 4,\ m = 1,\ n = 3$)

$$\begin{Bmatrix} U_1 \\ U_2 \\ U_3 \\ U_4 \end{Bmatrix} = \begin{bmatrix} 0.5 & 0.0 & 0.0 \\ 1.0 & 0.0 & 0.0 \\ 0.0 & 1.0 & 0.0 \\ 0.0 & 0.0 & 1.0 \end{bmatrix} \begin{Bmatrix} U_2 \\ U_3 \\ U_4 \end{Bmatrix}$$

The transformed set of equations are

$$10^6 \begin{bmatrix} 6.253 & -2.356 & -5.075 \\ -2.356 & 4.713 & 0.0 \\ -5.075 & 0.0 & 5.075 \end{bmatrix} \begin{Bmatrix} U_2 \\ U_3 \\ U_4 \end{Bmatrix} = \begin{Bmatrix} 0.5Q_1^1 + Q_1^2 \\ Q_2^1 \\ Q_2^2 \end{Bmatrix}$$

From the free-body diagram of the bar ABCD (see Figure P4.46), we find that $0.5F_{BE} + F_{CF} = 1.7P_2$; therefore, we have $0.5Q_1^1 + Q_1^2 = 1.7P_2 = 136$ kips and the condensed equation for the unknown U_2 is

$$6.253U_2 = \frac{136 \times 10^3}{6.253 \times 10^6}, \quad U_2 = 0.02175 \text{ (in)}, \quad U_1 = 0.5U_2 = 0.01087 \text{ (in)}$$

The forces in the bars AC and BD are

$$\begin{Bmatrix} Q_1^1 \\ Q_1^2 \end{Bmatrix} = 10^6 \begin{bmatrix} 4.7125 & 0 \\ 0 & 5.0750 \end{bmatrix} \begin{Bmatrix} U_1 \\ U_2 \end{Bmatrix} = 10^6 \begin{Bmatrix} 0.051225 \\ 0.110381 \end{Bmatrix}$$

PROPRIETARY MATERIAL. ©The McGraw-Hill Companies, Inc. All rights reserved.

The stresses in bars BE and CF are

$$\sigma_{BE} = \frac{F_{BE}}{A_{BE}} = \frac{51.225 \times 10^3}{19.5} = 2,626.9 \text{ psi}$$

$$\sigma_{CF} = \frac{F_{CF}}{A_{CF}} = \frac{110.381 \times 10^3}{16.8} = 6,570.3 \text{ psi}$$

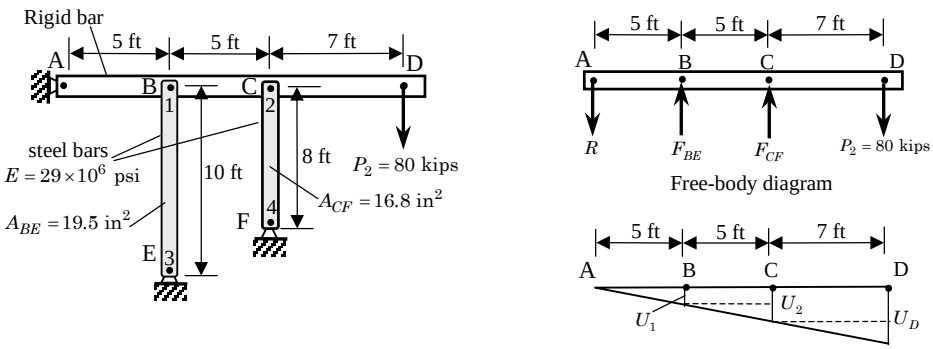

Figure P4.46

This Manual is being provided only to authorized professors and instructors for use in preparing for the classes using the affiliated textbook. No other use or distribution of this Manual is permitted. This Manual may not be sold and may not be distributed to or used by any student or other third party. No part of this Manual may be reproduced, displayed or distributed in any form or by any means, electronic or otherwise, without the prior written permission of the McGraw-Hill.

PROPRIETARY MATERIAL. © The McGraw-Hill Companies, Inc. All rights reserved.

PROPRIETARY AND CONFIDENTIAL

This Manual is the proprietary property of The McGraw-Hill Companies, Inc. ("McGraw-Hill") and protected by copyright and other state and federal laws. By opening and using this Manual the user agrees to the following restrictions, and if the recipient does not agree to these restrictions, the Manual should be promptly returned unopened to McGraw-Hill: **This Manual is being provided only to authorized professors and instructors for use in preparing for the classes using the affiliated textbook. No other use or distribution of this Manual is permitted. This Manual may not be sold and may not be distributed to or used by any student or other third party. No part of this Manual may be reproduced, displayed or distributed in any form or by any means, electronic or otherwise, without the prior written permission of the McGraw-Hill.**

Chapter 5

BEAMS AND FRAMES

Problem 5.1: The natural vibration of a beam under applied axial compressive load N_0 is governed by the differential equation

$$\frac{d^2}{dx^2}\left(EI\frac{d^2w}{dx^2}\right)+N_0\frac{d^2w}{dx^2}=\rho A\omega^2 w$$

where ω denotes nondimensional frequency of natural vibration, EI is the bending stiffness, and ρA is the mass (mass density times cross-sectional area) of the beam. Develop (a) the weak form and (b) finite element model of the equation.

Solution: This problem is useful for the material covered in Chapter 6.
(a) The weak form is given by

$$\begin{aligned}0=&\int_{x_a}^{x_b}\left(EI\frac{d^2v}{dx^2}\frac{d^2w}{dx^2}-N_0\frac{dv}{dx}\frac{dw}{dx}-\rho A\omega^2 vw\right)dx\\&+\left\{v\left[\frac{d}{dx}\left(EI\frac{d^2w}{dx^2}\right)+N_0\frac{dw}{dx}\right]\right\}_{x_a}^{x_b}+\left[\left(-\frac{dv}{dx}\right)EI\frac{d^2w}{dx^2}\right]_{x_a}^{x_b}\end{aligned}$$

where v is the weight function. The primary variables of the formulation are

$$w,\quad \frac{dw}{dx}$$

and the secondary variables are

$$\frac{d}{dx}\left(EI\frac{d^2w}{dx^2}\right)+N_0\frac{dw}{dx},\quad EI\frac{d^2w}{dx^2}$$

Define the secondary variables [see Eq. (5.2.3)] as

$$\begin{aligned}\left[\frac{d}{dx}\left(EI\frac{d^2w}{dx^2}\right)+N_0\frac{dw}{dx}\right]_{x=x_a}&\equiv Q_1\\ \left[-\frac{d}{dx}\left(EI\frac{d^2w}{dx^2}\right)-N_0\frac{dw}{dx}\right]_{x=x_b}&\equiv Q_3\\ \left[EI\frac{d^2w}{dx^2}\right]_{x=x_a}\equiv Q_2,\quad \left[-EI\frac{d^2w}{dx^2}\right]_{x=x_b}&\equiv Q_4\end{aligned}$$

PROPRIETARY MATERIAL. ©The McGraw-Hill Companies, Inc. All rights reserved.

The weak form becomes

$$0 = \int_{x_a}^{x_b} \left(EI \frac{d^2v}{dx^2}\frac{d^2w}{dx^2} - N_0 \frac{dv}{dx}\frac{dw}{dx} - \rho A \omega^2 vw \right) dx$$
$$- v(x_a)Q_1 - v(x_b)Q_3 - \theta(x_a)Q_2 - \theta(x_b)Q_4$$

where $\theta = -(dw/dx)$.

(b) The finite element model of the equation is obtained by substituting Eq. (5.2.10) into the weak form. We obtain

$$([K^e] - \lambda[M^e] - N_0[G^e])\{\Delta\} = \{Q^e\}$$

where $\lambda = \omega^2$ and

$$K_{ij}^e = \int_{x_a}^{x_b} EI \frac{d^2\phi_i}{dx^2}\frac{d^2\phi_j}{dx^2}\, dx, \quad M_{ij}^e = \int_{x_a}^{x_b} \rho A\, \phi_i \phi_j\, dx, \quad G_{ij}^e = \int_{x_a}^{x_b} \frac{d\phi_i}{dx}\frac{d\phi_j}{dx}\, dx$$

and $\{\Delta^e\}$ and $\{Q^e\}$ are the usual nodal displacement and force vectors. Here $[K^e]$ denotes the stiffness matrix, $[M^e]$ the mass matrix, and $[G^e]$ the geometric stiffness matrix.

Problem 5.2: The differential equation governing axisymmetric bending of circular plates on elastic foundation is given by

$$-\frac{1}{r}\frac{d}{dr}\left[\frac{d}{dr}(rM_{rr}) - M_{\theta\theta}\right] + kw = q(r)$$

where k is the modulus of the elastic foundation, q is the transverse distributed load, and

$$M_{rr} = -D\left(\frac{d^2w}{dr^2} + \nu\frac{1}{r}\frac{dw}{dr}\right), \quad M_{\theta\theta} = -D\left(\nu\frac{d^2w}{dr^2} + \frac{1}{r}\frac{dw}{dr}\right)$$

Develop (a) the weak form and identify the primary and secondary variables, and (b) the finite element model. Note that the shear force is defined by

$$Q_r = \frac{1}{r}\left[\frac{d}{dr}(rM_{rr}) - M_{\theta\theta}\right]$$

Solution: Since this is an axisymmetric problem associated with a circular plate, the elemental volume is $dV = dr \cdot r\, d\theta \cdot dz$. The integration with respect to θ and z yields (because all quantities are independent of θ and z) a factor $2\pi t$, where t is the thickness of the plate. Dividing out by this factor, we have

$$0 = \int_{r_a}^{r_b} v\left[-\frac{1}{r}\frac{d^2}{dr^2}(rM_{rr}) + \frac{1}{r}\frac{dM_{\theta\theta}}{dr} + kvw - q\right] r\, dr$$
$$= \int_{r_a}^{r_b}\left[-\frac{d^2v}{dr^2}M_{rr} - \frac{1}{r}\frac{dv}{dr}M_{\theta\theta} + kvw - vq\right] r dr$$
$$- v(r_a)Q_1 - v(r_b)Q_3 - \left(-\frac{dv}{dr}\right)_a Q_2 - \left(-\frac{dv}{dr}\right)_b Q_4 \qquad (1)$$

PROPRIETARY MATERIAL. ©The McGraw-Hill Companies, Inc. All rights reserved.

where v is the weight function and

$$Q_1 = -\left[\frac{d}{dr}(rM_{rr}) - M_{\theta\theta}\right]_{r_a}, \quad Q_3 = \left[\frac{d}{dr}(rM_{rr}) - M_{\theta\theta}\right]_{r_b}$$
$$Q_2 = -\left[rM_{rr}\right]_{r_a}, \quad Q_4 = \left[rM_{rr}\right]_{r_b} \tag{2}$$

To develop the finite element model, we assume finite element interpolation of $w(r)$ (like in the beam bending)

$$w(r) \approx w_h^e(r) = \sum_{j=1}^{n=4} \Delta_j^e \phi_j^e(r) \tag{3}$$

Substituting for $v = \phi_i$ (to obtain the ith algebraic equation of the system) and $w = w_h^e$ from Eq. (3), we arrive at the result

$$[K^e]\{\Delta^e\} = \{q^e\} + \{Q^e\} \tag{4}$$

where

$$K_{ij}^e = \int_{r_a}^{r_b} D\left[\frac{d^2\phi_i}{dr^2}\frac{d^2\phi_j}{dr^2} + \frac{\nu}{r}\left(\frac{d\phi_i}{dr}\frac{d^2\phi_j}{dr^2} + \frac{d^2\phi_i}{dr^2}\frac{d\phi_j}{dr}\right) + \frac{1}{r^2}\frac{d\phi_i}{dr}\frac{d\phi_j}{dr}\right] r\,dr$$
$$q_i^e = \int_{r_a}^{r_b} q\phi_i\; r\,dr \tag{5}$$

Problem 5.3: The differential equations governing axisymmetric bending of circular plates according to the shear deformation plate theory are

$$-\frac{1}{r}\frac{d}{dr}(rQ_r) - q = 0 \tag{1}$$
$$-\frac{1}{r}\left[\frac{d}{dr}(rM_{rr}) - M_{\theta\theta}\right] + Q_r = 0 \tag{2}$$

where

$$M_{rr} = D\left(\frac{d\Psi}{dr} + \nu\frac{\Psi}{r}\right), \quad M_{\theta\theta} = D\left(\nu\frac{d\Psi}{dr} + \frac{\Psi}{r}\right)$$
$$Q_r = K_s GH\left(\Psi + \frac{dw}{dr}\right)$$

$D = EH^3/[12(1-\nu^2)]$ and H is the plate thickness. Develop

(a) the weak form of the equations over an element; and
(b) the finite element model of the equations.

PROPRIETARY MATERIAL. ©The McGraw-Hill Companies, Inc. All rights reserved.

Solution: (a) The weak forms of the equations are obtained as follows:

$$
\begin{aligned}
0 &= \int_{r_a}^{r_b} v_1 \left[-\frac{1}{r}\frac{d}{dr}\left(rQ_r\right) - q \right] r dr \\
&= \int_{r_a}^{r_b} \left[\frac{dv_1}{dr} Q_r - q \right] r dr + \left[v_1 \cdot (-rQ_r) \right]_{r_a}^{r_b} \\
&= \int_{r_a}^{r_b} \left[\frac{dv_1}{dr} Q_r - q \right] r dr - v_1(r_a)Q_1 - v_1(r_b)Q_3 \qquad (1)
\end{aligned}
$$

$$
\begin{aligned}
0 &= \int_{r_a}^{r_b} v_2 \left\{ -\frac{1}{r}\left[\frac{d}{dr}\left(rM_{rr}\right) - M_{\theta\theta} \right] + Q_r \right\} r dr \\
&= \int_{r_a}^{r_b} \left[\frac{dv_2}{dr}\left(rM_{rr}\right) + v_2 M_{\theta\theta} + v_1 r Q_r \right] dr + \left[v_2 \cdot (-rM_{rr}) \right]_{r_a}^{r_b} \\
&= \int_{r_a}^{r_b} \left[\frac{dv_2}{dr}\left(rM_{rr}\right) + v_2 M_{\theta\theta} + v_2 r Q_r \right] dr - v_2(r_a)Q_2 - v_2(r_b)Q_4 \qquad (2)
\end{aligned}
$$

where

$$
Q_1 = -\left[rQ_r\right]_{r_a}, \quad Q_3 = \left[rQ_r\right]_{r_b}, \quad Q_2 = -\left[rM_{rr}\right]_{r_a}, \quad Q_4 = \left[rM_{rr}\right]_{r_b} \qquad (3)
$$

(b) The finite element model is given by seeking approximation of w and Ψ as

$$
w(r) \approx w_h^e = \sum_{i=1}^{m} w_i^e \psi_i^{(1)}(r), \quad \Psi(r) \approx \Psi_h^e = \sum_{i=1}^{m} \Psi_i^e \psi_i^{(2)}(r) \qquad (4)
$$

Substituting the above expressions along with $v_1 = \psi_i^{(1)}$ and $v_2 = \psi_i^{(2)}$ into the weak forms, we obtain

$$
\begin{bmatrix} [K^{11}] & [K^{12}] \\ [K^{21}] & [K^{22}] \end{bmatrix} \begin{Bmatrix} \{w\} \\ \{\Psi\} \end{Bmatrix} = \begin{Bmatrix} \{F^1\} \\ \{F^2\} \end{Bmatrix} \qquad (5)
$$

where

$$
\begin{aligned}
K_{ij}^{11} &= \int_{r_a}^{r_b} K_s GH \frac{d\psi_i^{(1)}}{dr}\frac{d\psi_j^{(1)}}{dr}\, r dr, \quad K_{ij}^{12} = \int_{r_a}^{r_b} K_s GH \frac{d\psi_i^{(1)}}{dr}\psi_j^{(2)}\, r dr = K_{ji}^{21} \\
K_{ij}^{22} &= \int_{r_a}^{r_b} D \left[\frac{d\psi_i^{(2)}}{dr}\frac{d\psi_j^{(2)}}{dr} + \frac{\nu}{r}\left(\psi_i^{(2)}\frac{d\psi_j^{(2)}}{dr} + \frac{d\psi_i^{(2)}}{dr}\psi_j^{(2)} \right) + \frac{1}{r^2}\psi_i^{(2)}\psi_j^{(2)} \right] r dr \\
&\quad + \int_{r_a}^{r_b} K_s GH \psi_i^{(2)}\psi_j^{(2)}\, r dr \\
F_i^1 &= \int_{r_a}^{r_b} q\psi_i^{(1)}\, r dr + \psi_i^{(1)}(r_a)Q_1 + \psi_i^{(1)}(r_b)Q_3 \\
F_i^2 &= \psi_i^{(2)}(r_a)Q_2 + \psi_i^{(2)}(r_b)Q_4 \qquad (6)
\end{aligned}
$$

PROPRIETARY MATERIAL. © The McGraw-Hill Companies, Inc. All rights reserved.

New Problem 5.1: Consider the following pair of differential equations:

$$-\frac{d}{dx}\left(a\frac{du}{dx}-b\frac{d^2w}{dx^2}\right)=0,\quad -\frac{d^2}{dx^2}\left(b\frac{du}{dx}-c\frac{d^2w}{dx^2}\right)-f=0$$

where u and w are the dependent unknowns, a, b, c and f are given functions of x.

(a) Develop the weak forms of the equations over a typical element and identify the primary and secondary variables of the formulation. Make sure that the bilinear form is symmetric (so that the element coefficient matrix is symmetric).

(b) Develop the finite element model by assuming approximation of the form

$$u(x)=\sum_{j=1}^{m}u_j\psi_j(x)\ ,\quad w(x)=\sum_{j=1}^{n}w_j\phi_j(x)$$

Hint: The weight functions v_1 and v_2 used for the two equations are like u and w, respectively.

(c) Comment on the type of interpolation functions ψ_j and ϕ_j (*i.e.*, Lagrange type or Hermite type) and the minimum degree of approximation functions that can be used in this problem.

Solution: The weak forms are

$$\begin{aligned}
0&=\int_{x_a}^{x_b}v_1\left[-\frac{d}{dx}\left(a\frac{du}{dx}-b\frac{d^2w}{dx^2}\right)\right]dx\\
&=\int_{x_a}^{x_b}\frac{dv_1}{dx}\left(a\frac{du}{dx}-b\frac{d^2w}{dx^2}\right)dx-\left[v_1\left(a\frac{du}{dx}-b\frac{d^2w}{dx^2}\right)\right]_{x_a}^{x_b}\\
&=\int_{x_a}^{x_b}\frac{dv_1}{dx}\left(a\frac{du}{dx}-b\frac{d^2w}{dx^2}\right)dx-v_1(x_a)P_1-v_1(x_b)P_2 \qquad (1)\\
0&=\int_{x_a}^{x_b}v_2\left[-\frac{d^2}{dx^2}\left(b\frac{du}{dx}-c\frac{d^2w}{dx^2}\right)-f\right]dx\\
&=\int_{x_a}^{x_b}\left[-\frac{d^2v_2}{dx^2}\left(b\frac{du}{dx}-c\frac{d^2w}{dx^2}\right)-v_2f\right]dx\\
&\quad-v_2(x_a)P_3-v_2(x_b)P_4-\left(\frac{dv_2}{dx}\right)_{x_a}P_5-\left(\frac{dv_2}{dx}\right)_{x_b}P_6 \qquad (2)
\end{aligned}$$

where P_i are the secondary variables

$$P_1=\left[-\left(a\frac{du}{dx}-b\frac{d^2w}{dx^2}\right)\right]_{x_a},\quad P_2=\left[\left(a\frac{du}{dx}-b\frac{d^2w}{dx^2}\right)\right]_{x_b} \qquad (3)$$

PROPRIETARY MATERIAL. ©The McGraw-Hill Companies, Inc. All rights reserved.

$$P_3 = \left[-\frac{d}{dx}\left(b\frac{du}{dx} - c\frac{d^2w}{dx^2}\right)\right]_{x_a}, \quad P_4 = \left[\frac{d}{dx}\left(b\frac{du}{dx} - c\frac{d^2w}{dx^2}\right)\right]_{x_b} \tag{4a}$$

$$P_5 = \left[b\frac{du}{dx} - c\frac{d^2w}{dx^2}\right]_{x_a}, \quad P_6 = \left[-\left(b\frac{du}{dx} - c\frac{d^2w}{dx^2}\right)\right]_{x_b} \tag{4b}$$

The primary variables are u, w, and dw/dx.

(b) Substituting $v_1 = \psi_i$, $v_2 = \phi_i$, and the above approximation into the weak forms we obtain the finite element model

$$\begin{bmatrix} [A] & [B] \\ [C] & [D] \end{bmatrix} \begin{Bmatrix} \{u\} \\ \{w\} \end{Bmatrix} = \begin{Bmatrix} \{0\} \\ \{f\} \end{Bmatrix} + \begin{Bmatrix} \{R\} \\ \{Q\} \end{Bmatrix} \tag{5}$$

where

$$\begin{aligned} A_{ij} &= \int_{x_a}^{x_b} a\frac{d\psi_i}{dx}\frac{d\psi_j}{dx}\,dx, \quad B_{ij} = -\int_{x_a}^{x_b} b\frac{d\psi_i}{dx}\frac{d^2\phi_j}{dx^2}\,dx \\ C_{ij} &= -\int_{x_a}^{x_b} b\frac{d^2\phi_i}{dx^2}\frac{d\psi_j}{dx}\,dx, \quad D_{ij} = \int_{x_a}^{x_b} c\frac{d^2\phi_i}{dx^2}\frac{d^2\phi_j}{dx^2}\,dx \\ f_i &= \int_{x_a}^{x_b} f\phi_i\,dx \end{aligned} \tag{6}$$

and

$$\{R\} = \begin{Bmatrix} P_1 \\ P_2 \end{Bmatrix}, \quad \{Q\} = \begin{Bmatrix} P_3 \\ P_4 \\ P_5 \\ P_6 \end{Bmatrix} \tag{7}$$

Clearly, The coefficient matrix is symmetric because $C_{ji} = B_{ij}$ or $[C]^T = [B]$.

(c) It is clear from the weak forms that ψ_i must be the Lagrange interpolation functions (minimum linear) and ϕ_i are the Hermite interpolation functions (minimum cubic).

New Problem 5.2: The principle of minimum total potential energy for axisymmetric bending of polar orthotropic plates according to the first-order shear deformation theory requires $\delta\Pi(w_0, \phi) = 0$, where

$$\begin{aligned} \delta\Pi(w,\Psi) = 2\int_b^a \Bigg[&\left(D_{11}\frac{d\Psi}{dr} + D_{12}\frac{\Psi}{r}\right)\frac{d\delta\Psi}{dr} + \frac{1}{r}\left(D_{12}\frac{d\Psi}{dr} + D_{22}\frac{\Psi}{r}\right)\delta\Psi \\ &+ A_{55}\left(\Psi + \frac{dw}{dr}\right)\left(\delta\Psi + \frac{d\delta w}{dr}\right) - q\delta w\Bigg] r\,dr \end{aligned} \tag{1}$$

where b is the inner radius and a the outer radius of the radial element. Derive the displacement finite element model of the equations. In particular, show that the

PROPRIETARY MATERIAL. ©The McGraw-Hill Companies, Inc. All rights reserved.

finite element model is of the form (i.e., define the matrix coefficients of the following equation)

$$\begin{bmatrix} [K^{11}] & [K^{12}] \\ [K^{12}]^{\mathrm{T}} & [K^{22}] \end{bmatrix} \begin{Bmatrix} \{w\} \\ \{\Psi\} \end{Bmatrix} = \begin{Bmatrix} \{F^1\} \\ \{F^2\} \end{Bmatrix} \tag{2}$$

Solution: Clearly, the given variational statement is equivalent to the following weak forms:

$$0 = \int_b^a A_{55} \left[\frac{d\delta w}{dr} \left(\Psi + \frac{dw}{dr} \right) - q\delta w \right] r dr \tag{3}$$

$$\begin{aligned} 0 = \int_b^a \Bigg[& \frac{d\delta\Psi}{dr} \left(D_{11} \frac{d\Psi}{dr} + D_{12} \frac{\Psi}{r} \right) + \frac{1}{r} \delta\Psi \left(D_{12} \frac{d\Psi}{dr} + D_{22} \frac{\Psi}{r} \right) \\ & + A_{55} \delta\Psi \left(\Psi + \frac{dw}{dr} \right) \Bigg] r dr \end{aligned} \tag{4}$$

The variations $\delta w = v_1$ and $\delta\Psi = v_2$ are the weight functions of the weak forms.

Assuming approximation of the form

$$w(r) \approx w_h^e = \sum_{i=1}^m w_i^e \psi_i^{(1)}(r), \quad \Psi(r) \approx \Psi_h^e = \sum_{i=1}^m \Psi_i^e \psi_i^{(2)} \tag{5}$$

in (3) and (4), we obtain the finite element model in Eq. (2), with the matrix coefficients

$$\begin{aligned} K_{ij}^{11} &= \int_{r_a}^{r_b} A_{55} \frac{d\psi_i^{(1)}}{dr} \frac{d\psi_j^{(1)}}{dr} \, r dr, \quad K_{ij}^{12} = \int_{r_a}^{r_b} A_{55} \frac{d\psi_i^{(1)}}{dr} \psi_j^{(2)} \, r dr \\ K_{ij}^{22} &= \int_{r_a}^{r_b} \Bigg[D_{11} \frac{d\psi_i^{(2)}}{dr} \frac{d\psi_j^{(2)}}{dr} + \frac{1}{r} D_{12} \left(\psi_i^{(2)} \frac{d\psi_j^{(2)}}{dr} + \frac{d\psi_i^{(2)}}{dr} \psi_j^{(2)} \right) \\ & \qquad + \frac{1}{r^2} D_{22} \psi_i^{(2)} \psi_j^{(2)} + A_{55} \psi_i^{(2)} \psi_j^{(2)} \Bigg] r dr \\ F_i^1 &= \int_{r_a}^{r_b} q \psi_i^{(1)} \, r dr + \psi_i^{(1)}(r_a) Q_1 + \psi_i^{(1)}(r_b) Q_3 \\ F_i^2 &= \psi_i^{(2)}(r_a) Q_2 + \psi_i^{(2)}(r_b) Q_4 \end{aligned} \tag{6}$$

These coefficients reduce to those in Problem 5.3 for the isotropic case.

Problem 5.4: Consider the fourth-order equation (5.2.1) and its weak form (5.2.4). Suppose that a two-node element is employed, with *three* primary variables at each node: (w, θ, and κ), where $\theta = dw/dx$ and $\kappa = d^2w/dx^2$. Show that the associated

PROPRIETARY MATERIAL. ©The McGraw-Hill Companies, Inc. All rights reserved.

Hermite interpolation functions are given by

$$\phi_1 = 1 - 10\frac{\bar{x}^3}{h^3} + 15\frac{\bar{x}^4}{h^4} - 6\frac{\bar{x}^5}{h^5}, \qquad \phi_2 = \bar{x}\left(1 - 6\frac{\bar{x}^2}{h^2} + 8\frac{\bar{x}^3}{h^3} - 3\frac{\bar{x}^4}{h^4}\right)$$

$$\phi_3 = \frac{\bar{x}^2}{2}\left(1 - 3\frac{\bar{x}}{h} + 3\frac{\bar{x}^2}{h^2} - \frac{\bar{x}^3}{h^3}\right), \quad \phi_4 = 10\frac{\bar{x}^3}{h^3} - 15\frac{\bar{x}^4}{h^4} + 6\frac{\bar{x}^5}{h^5}$$

$$\phi_5 = -\bar{x}\left(4\frac{\bar{x}^2}{h^2} - 7\frac{\bar{x}^3}{h^3} + 3\frac{\bar{x}^4}{h^4}\right), \qquad \phi_6 = \frac{\bar{x}^2}{2}\left(\frac{\bar{x}}{h} - 2\frac{\bar{x}^2}{h^2} + \frac{\bar{x}^3}{h^3}\right)$$

where $\bar{x}$ is the element coordinate with the origin at node 1 (see the figure below).

Generalized displacements	$w_1^e \equiv \Delta_1^e$	$w_2^e \equiv \Delta_4^e$
	$\theta_1^e \equiv \Delta_2^e$	$\theta_2^e \equiv \Delta_5^e$
	$\kappa_1^e \equiv \Delta_3^e$	$\kappa_2^e \equiv \Delta_6^e$

Solution: Let $w(\bar{x}) \approx c_1 + c_2\bar{x} + c_3\bar{x}^2 + c_4\bar{x}^3 + c_5\bar{x}^4 + c_6\bar{x}^5$ where $\bar{x}$ is the local coordinate with the origin at node 1 (i.e., $x = \bar{x} + x_1^e$. where x is the global coordinate and x_1^e is the global coordinate of the first node of element e). Evaluating $w, \theta \equiv \frac{dw}{dx}$, and $\kappa \equiv \frac{d^2w}{dx^2}$ at nodes 1 and 2 (i.e., at $\bar{x} = 0$ and $\bar{x} = h$), we obtain

$$\begin{Bmatrix} w_1 \\ \theta_1 \\ \kappa_1 \\ w_2 \\ \theta_2 \\ \kappa_2 \end{Bmatrix} = \begin{bmatrix} 1 & 0 & 0 & 0 & 0 & 0 \\ 0 & 1 & 0 & 0 & 0 & 0 \\ 0 & 0 & 2 & 0 & 0 & 0 \\ 1 & h & h^2 & h^3 & h^4 & h^5 \\ 0 & 1 & 2h & 3h^2 & 4h^3 & 5h^4 \\ 0 & 0 & 2 & 6h & 12h^2 & 20h^3 \end{bmatrix} \begin{Bmatrix} c_1 \\ c_2 \\ c_3 \\ c_4 \\ c_5 \\ c_6 \end{Bmatrix} \tag{1}$$

Inverting the equations, we obtain

$$\begin{Bmatrix} c_1 \\ c_2 \\ c_3 \\ c_4 \\ c_5 \\ c_6 \end{Bmatrix} = \frac{1}{2h^5} \begin{bmatrix} 2h^5 & 0 & 0 & 0 & 0 & 0 \\ 0 & 2h^5 & 0 & 0 & 0 & 0 \\ 0 & 0 & h^5 & 0 & 0 & 0 \\ -20h^2 & -12h^3 & -3h^4 & 20h^2 & -8h^3 & h^4 \\ 30h & 16h^2 & 3h^3 & -30h & 14h^2 & -2h^3 \\ -12 & -6h & -h^2 & 12 & -6h & h^2 \end{bmatrix} \begin{Bmatrix} w_1 \\ \theta_1 \\ \kappa_1 \\ w_2 \\ \theta_2 \\ \kappa_2 \end{Bmatrix} \tag{2}$$

Substituting the above expression for c_i into the approximation, we obtain

$$w(\bar{x}) \approx c_1 + c_2\bar{x} + c_3\bar{x}^2 + c_4\bar{x}^3 + c_5\bar{x}^4 + c_6\bar{x}^5 = \sum_{i=1}^{6} \phi_i(\bar{x})\Delta_i \tag{3}$$

where ϕ_i are the required *Hermite polynomials of degree 5.*

PROPRIETARY MATERIAL. ©The McGraw-Hill Companies, Inc. All rights reserved.

New Problem 5.3: Compute element stiffness, mass matrices and force vector (for uniform load) for the beam element of Problem 5.4.

Solution: The element stiffness matrix $[K]$, mass matrix $[M]$, and force vector $\{f\}$ are obtained by substituting for ϕ_i into

$$K_{ij} = EI \int_0^h \frac{d^2\phi_i}{dx^2}\frac{d^2\phi_j}{dx^2}\, dx, \quad M_{ij} = \rho A \int_0^h \phi_i\phi_j\, dx, \quad f_i = q_0 \int_0^h \phi_i\, dx$$

The stiffness matrix is

$$[K] = \frac{EI}{70h^3}\begin{bmatrix} 1200 & 600h & 30h^2 & -1200 & 600h & -30h^2 \\ 600h & 384h^2 & 22h^3 & -600h & 216h^2 & -8h^3 \\ 30h^2 & 22h^3 & 6h^4 & -30h^2 & 8h^3 & h^4 \\ -1200 & -600h & -30h^2 & 1200 & -600h & 30h^2 \\ 600h & 216h^2 & 8h^3 & -600h & 384h^2 & -22h^3 \\ -30h^2 & -8h^3 & h^4 & 30h^2 & -22h^3 & 6h^4 \end{bmatrix}.$$

and the mass matrix is

$$[M] = \frac{\rho Ah}{55440}\begin{bmatrix} 21720 & 3732h & 281h^2 & 6000 & -1812h & 181h^2 \\ 3732h & 832h^2 & 69h^3 & 1812h & -532h^2 & 52h^3 \\ 281h^2 & 69h^3 & 6h^4 & 181h^2 & -52h^3 & 5h^4 \\ 6000 & 1812h & 181h^2 & 21720 & -3732h & 281h^2 \\ -1812h & -532h^2 & -52h^3 & -3732h & 832h^2 & -69h^3 \\ 181h^2 & 52h^3 & 5h^4 & 281h^2 & -69h^3 & 6h^4 \end{bmatrix}.$$

The force vector is given by

$$\{f\}^{\mathrm{T}} = \frac{f_0 h}{120}\{60 \;\; 12h \;\; h^2 \;\; 60 \;\; -12h \;\; h^2\}.$$

These element matrices are calculated using program *Maple*.

Problem 5.5: Consider the weak form (5.2.4) of the Euler–Bernoulli beam element. Use a three-node element with two degrees of freedom (w, θ), where $\theta \equiv -dw/dx$. Derive the Hermite interpolation functions for the element. Compute the element stiffness matrix and force vector.

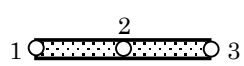

Generalized displacements $\quad w_1^e \equiv \Delta_1^e \quad w_2^e \equiv \Delta_3^e \quad w_3^e \equiv \Delta_5^e$

$\qquad\qquad\qquad\qquad\qquad\qquad \theta_1^e \equiv \Delta_2^e \quad \theta_2^e \equiv \Delta_4^e \quad \theta_3^e \equiv \Delta_6^e$

Solution: Let $w(\bar{x}) \approx c_1 + c_2\bar{x} + c_3\bar{x}^2 + c_4\bar{x}^3 + c_5\bar{x}^4 + c_6\bar{x}^5$ where $\bar{x}$ is the local coordinate with the origin at node 1. Evaluating w and $\theta \equiv -\frac{dw}{dx}$ at nodes 1, 2, and

PROPRIETARY MATERIAL. ©The McGraw-Hill Companies, Inc. All rights reserved.

3 (i.e., at $\bar{x} = 0$, $\bar{x} = h/2$, and $\bar{x} = h$), we obtain

$$\begin{Bmatrix} w_1 \\ \theta_1 \\ w_2 \\ \theta_2 \\ w_3 \\ \theta_3 \end{Bmatrix} = \begin{bmatrix} 1 & 0 & 0 & 0 & 0 & 0 \\ 0 & -1 & 0 & 0 & 0 & 0 \\ 1 & \frac{h}{2} & \frac{h^2}{4} & \frac{h^3}{8} & \frac{h^4}{16} & \frac{h^5}{32} \\ 0 & -1 & -h & -\frac{3h^2}{4} & -\frac{4h^3}{8} & -\frac{5h^4}{16} \\ 1 & h & h^2 & h^3 & h^4 & h^5 \\ 0 & -1 & -2h & -3h^2 & -4h^3 & -5h^4 \end{bmatrix} \begin{Bmatrix} c_1 \\ c_2 \\ c_3 \\ c_4 \\ c_5 \\ c_6 \end{Bmatrix}$$

Inverting the equations, we obtain

$$\begin{Bmatrix} c_1 \\ c_2 \\ c_3 \\ c_4 \\ c_5 \\ c_6 \end{Bmatrix} = \frac{1}{h^5} \begin{bmatrix} h^5 & 0 & 0 & 0 & 0 & 0 \\ 0 & -h^5 & 0 & 0 & 0 & 0 \\ -23h^3 & 6h^4 & 16h^3 & 8h^4 & 7h^3 & h^4 \\ 66h^2 & -13h^3 & -32h^2 & -32h^3 & -34h^2 & -5h^3 \\ -68h & 12h^2 & 16h & 40h^2 & 52h & 8h^2 \\ 24 & -4h & 0 & -16h & -24 & -4h \end{bmatrix} \begin{Bmatrix} w_1 \\ \theta_1 \\ w_2 \\ \theta_2 \\ w_3 \\ \theta_3 \end{Bmatrix}$$

The resulting interpolation functions (*Hermite polynomials of degree 5*) are

$$\begin{aligned}
\phi_1 &= 1 - 23\frac{\bar{x}^2}{h^2} + 66\frac{\bar{x}^3}{h^3} - 68\frac{\bar{x}^4}{h^4} + 24\frac{\bar{x}^5}{h^5} \\
\phi_2 &= -\bar{x}\left(1 - 6\frac{\bar{x}}{h} + 13\frac{\bar{x}^2}{h^2} - 12\frac{\bar{x}^3}{h^3} + 4\frac{\bar{x}^4}{h^4}\right) \\
\phi_3 &= 16\frac{\bar{x}^2}{h^2}\left(1 - \frac{\bar{x}}{h}\right)^2 \\
\phi_4 &= 8\bar{x}\left(\frac{\bar{x}}{h} - 4\frac{\bar{x}^2}{h^2} + 5\frac{\bar{x}^3}{h^3} - 2\frac{\bar{x}^4}{h^4}\right) \\
\phi_5 &= \left(7\frac{\bar{x}^2}{h^2} - 34\frac{\bar{x}^3}{h^3} + 52\frac{\bar{x}^4}{h^4} - 24\frac{\bar{x}^5}{h^5}\right) \\
\phi_6 &= \bar{x}\left(\frac{\bar{x}}{h} - 5\frac{\bar{x}^2}{h^2} + 8\frac{\bar{x}^3}{h^3} - 4\frac{\bar{x}^4}{h^4}\right)
\end{aligned}$$

where $\bar{x}$ is the element coordinate with the origin at node 1 (i.e., $x = \bar{x} + x_1^e$. where x is the global coordinate and x_1^e is the global coordinate of the first node of element e).

New Problem 5.4: Compute element stiffness and mass matrices and force vector (for uniform load) for the beam element of Problem 5.5.

Solution: The stiffness and mass matrices and force vector are obtained by substituting $\phi_i^e(x)$ into the definitions (see the solution to New Problem 5.3). The

PROPRIETARY MATERIAL. ©The McGraw-Hill Companies, Inc. All rights reserved.

stiffness matrix is

$$[K] = \frac{EI}{35h^3}\begin{bmatrix} 5092 & -1138h & -3584 & -1920h & -1508 & -242h \\ -1138h & 332h^2 & 896h & 320h^2 & 242h & 38h^2 \\ -3584 & 896h & 7168 & 0 & -3584 & -896h \\ -1920h & 320h^2 & 0 & 1280h^2 & 1920h & 320h^2 \\ -1508 & 242h & -3584 & 1920h & 5092 & 1138h \\ -242h & 38h^2 & -896h & 320h^2 & 1138h & 332h^2 \end{bmatrix}.$$

The mass matrix is

$$[M] = \frac{\rho Ah}{13860}\begin{bmatrix} 2092 & -114h & 880 & 160h & 262 & 29h \\ -114h & 8h^2 & -88h & -12h^2 & -29h & -3h^2 \\ 880 & -88h & 5632 & 0 & 880 & -88h \\ 160h & -12h^2 & 0 & 128h^2 & -160h & -12h^2 \\ 262 & -29h & 880 & -160h & 2092 & 114h \\ 29h & -3h^2 & -88h & -12h^2 & 114h & 8h^2 \end{bmatrix}.$$

The force vector is given by

$$\{f\}^{\mathrm{T}} = \frac{f_0 h}{60}\{14 \quad -h \quad 32 \quad 0 \quad 14 \quad h\}$$

.

Problems 5.6–5.20: Use the minimum number of Euler–Bernoulli beam finite elements to analyze the beam problems shown in Figs. P5.6–P5.20. In particular, give:

(a) the assembled stiffness matrix and force vector;

(b) the specified global displacements and forces, and the equilibrium conditions;

(c) the condensed matrix equations for the primary unknowns (i.e., generalized forces) separately.

Exploit symmetries, if any, in analyzing the problems. The instructor may also ask the students to compute the secondary variables at points other than the nodes.

Solution to Problem 5.6: Divide the structure into a vertical part AB and horizontal part BC, as shown in the figure. Then use one finite element in each part. Note that part AB has both transverse and axial loads (i.e. bending and extensional deformation), while part BC has only bending deformation. We consider each part separately.

PROPRIETARY MATERIAL. ©The McGraw-Hill Companies, Inc. All rights reserved.

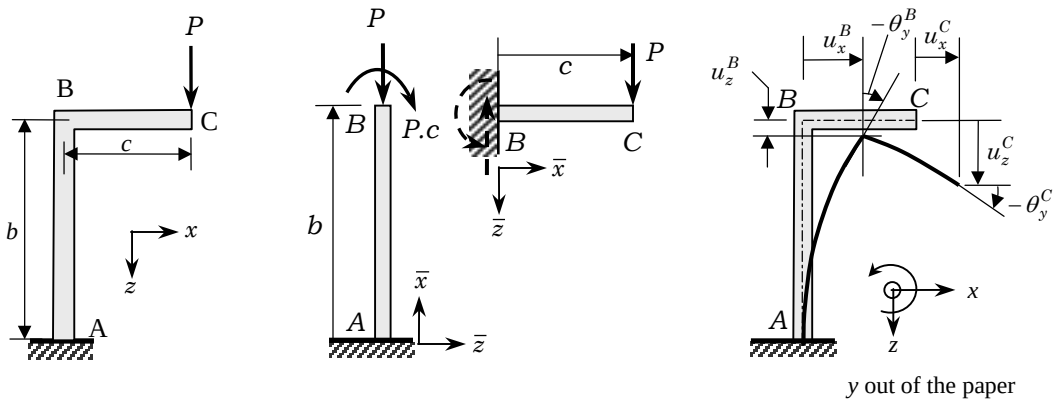

Figure P5.6

Member AB. For bending deformation we have

$$\frac{2EI}{b^3}\begin{bmatrix} 6 & -3b & -6 & -3b \\ -3b & 2b^2 & 3b & b^2 \\ -6 & 3b & 6 & 3b \\ -3b & b^2 & 3b & 2b^2 \end{bmatrix}\begin{Bmatrix} U_1 \\ U_2 \\ U_3 \\ U_4 \end{Bmatrix} = \begin{Bmatrix} Q_1 \\ Q_2 \\ 0 \\ -Pc \end{Bmatrix} \tag{1}$$

Using $U_1 = U_2 = 0$ (at the fixed end) we obtain

$$\frac{2EI}{b^3}\begin{bmatrix} 6 & 3b \\ 3b & 2b^2 \end{bmatrix}\begin{Bmatrix} U_3 \\ U_4 \end{Bmatrix} = \begin{Bmatrix} 0 \\ -Pc \end{Bmatrix} \;\rightarrow\; U_3 \equiv u_x^B = \frac{Pcb^2}{2EI}, \quad U_4 \equiv \theta_y^B = -\frac{Pcb}{EI} \tag{2}$$

For extensional deformation of member AB, we obtain (using one linear element)

$$\frac{EA}{b}\begin{bmatrix} 1 & -1 \\ 1 & 1 \end{bmatrix}\begin{Bmatrix} U_1^a \\ U_2^a \end{Bmatrix} = \begin{Bmatrix} P_1 \\ P_2 \end{Bmatrix} \tag{3}$$

Using $U_1^a = 0$ (at the fixed end) and $P_2 = -P$, we obtain $U_2^a = -u_z^B = -Pb/EA$.

Member BC. For bending deformation we have

$$\frac{2EI}{c^3}\begin{bmatrix} 6 & 3c \\ 3c & 2c^2 \end{bmatrix}\begin{Bmatrix} U_3 \\ U_4 \end{Bmatrix} = \begin{Bmatrix} P \\ 0 \end{Bmatrix} \;\rightarrow\; U_3 \equiv u_z^{BC} = \frac{Pc^3}{3EI}, \quad U_4 \equiv \theta_y^{BC} = -\frac{Pc^2}{2EI} \tag{4}$$

Thus, the vertical and horizontal deflections and rotation at point C are

$$\begin{aligned} u_z^C &= u_z^B + u_z^{BC} - \theta_y^B \cdot c = \frac{Pb}{EA} + \frac{Pc^3}{3EI} + \frac{Pc^2 b}{EI} \quad \text{(down)} \\ u_x^C &= u_x^B = \frac{Pcb^2}{2EI} \quad \text{(to the right)} \\ \theta_y^C &= \theta_y^B + \theta_y^{BC} = -\frac{Pcb}{EI} - \frac{Pc^2}{2EI} \quad \text{(CW)} \end{aligned} \tag{5}$$

PROPRIETARY MATERIAL. ©The McGraw-Hill Companies, Inc. All rights reserved.

Solution to Problem 5.7: Two-element mesh is used, with

$$h_1 = 96 \text{ in.}, \quad h_2 = 48 \text{ in}, \quad EI = 6 \times 10^8 \ \text{ lb-in}^2., \quad q_0 = 400/12 \text{ lb/in.}$$

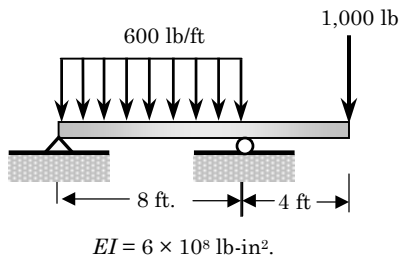

Figure P5.7

The boundary conditions and equilibrium of internal forces require:

$$U_1 = U_3 = 0, \quad Q_2^{(1)} = 0, \quad Q_4^{(1)} + Q_2^{(2)} = 0, \quad Q_3^{(2)} = 1000 \text{ lb}, \quad Q_4^{(2)} = 0 \tag{1}$$

The assembled equations are

$$10^4 \begin{bmatrix} 0.814 & -39.063 & -0.814 & -39.063 & 0 & 0 \\ & 2500 & 39.063 & 1250 & 0 & 0 \\ & & 7.324 & -117.19 & -6.510 & -156.25 \\ & & & 7500 & 156.25 & 2500 \\ & & & & 6.510 & 156.25 \\ & & & & & 5000 \end{bmatrix} \begin{Bmatrix} U_1 \\ U_2 \\ U_3 \\ U_4 \\ U_5 \\ U_6 \end{Bmatrix}$$

$$= \begin{Bmatrix} Q_1^{(1)} \\ Q_2^{(1)} \\ Q_3^{(1)} + Q_1^{(2)} \\ Q_4^{(1)} + Q_2^{(2)} \\ Q_3^{(2)} \\ Q_4^{(2)} \end{Bmatrix} + 10^4 \begin{Bmatrix} 0.240 \\ -3.840 \\ 0.240 \\ 3.840 \\ 0.000 \\ 0.000 \end{Bmatrix} \tag{2}$$

The solution is

$$U_2 = -0.003099, \quad U_4 = 0.003125, \quad U_5 = -0.15002 \text{ in.}, \quad U_6 = 0.003125$$

Solution to Problem 5.8: (a) For this problem, we have $[K^1] = [K^2]$ and $\{f^2\} = \{0\}$. The assembled equations are given by

$$\frac{2EI}{h^3} \begin{bmatrix} 6 & -3h & -6 & -3h & 0 & 0 \\ -3h & 2h^2 & 3h & h^2 & 0 & 0 \\ -6 & 3h & 6+6 & 3h-3h & -6 & -3h \\ -3h & h^2 & 3h-3h & 2h^2+2h^2 & 3h & h^2 \\ 0 & 0 & -6 & 3h & 6 & 3h \\ 0 & 0 & -3h & h^2 & 3h & 2h^2 \end{bmatrix} \begin{Bmatrix} U_1 \\ U_2 \\ U_3 \\ U_4 \\ U_5 \\ U_6 \end{Bmatrix}$$

PROPRIETARY MATERIAL. ©The McGraw-Hill Companies, Inc. All rights reserved.

$$= \frac{q_0 h}{12} \begin{Bmatrix} 6 \\ -h \\ 6+0 \\ h+0 \\ 0 \\ 0 \end{Bmatrix} + \begin{Bmatrix} Q_1^1 \\ Q_2^1 \\ Q_3^1 + Q_1^2 \\ Q_4^1 + Q_2^2 \\ Q_3^2 \\ Q_4^2 \end{Bmatrix} \tag{1}$$

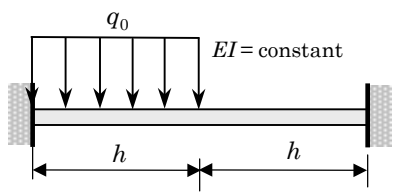

Figure P5.8

(b) The specified generalized displacements and forces are

$$U_1 = U_2 = U_5 = U_6 = 0; \quad Q_3^1 + Q_1^2 = 0, \quad Q_4^1 + Q_2^2 = 0 \tag{2}$$

(c) The condensed equations for the generalized displacements are,

$$\frac{2EI}{h^3} \begin{bmatrix} 12 & 0 \\ 0 & 4h^2 \end{bmatrix} \begin{Bmatrix} U_3 \\ U_4 \end{Bmatrix} = \frac{q_0 h}{12} \begin{Bmatrix} 6 \\ h \end{Bmatrix} \tag{3}$$

For this problem the number of the unknown generalized displacements is two, and hence Eqn. (3) can be solved easily:

$$U_3 = \frac{q_0 h^4}{48EI}, \quad U_4 = \frac{q_0 h^3}{96EI} \tag{4}$$

The condensed equations for the generalized forces (i.e., reactions at the clamped ends) are given by

$$\begin{aligned}
Q_1^1 &= -\frac{q_0 h}{2} - (6U_3 + 3hU_4)\frac{2EI}{h^3} = -\frac{13}{16} q_0 h \\
Q_2^1 &= -\frac{q_0 h^2}{12} + (3hU_3 + h^2 U_4)\frac{2EI}{h^3} = \frac{11}{48} f_0 h^2 \\
Q_3^2 &= -\frac{2EI}{h^3}(-6U_3 + 3hU_4) = -\frac{3}{16} q_0 h \\
Q_4^2 &= -\frac{2EI}{h^3}(-3hU_3 + h^2 U_4) = -\frac{5}{48} q_0 h^2
\end{aligned} \tag{5}$$

PROPRIETARY MATERIAL. ©The McGraw-Hill Companies, Inc. All rights reserved.

The bending moment from the definition is given by

$$
\begin{aligned}
M^c &= -EI\frac{d^2w}{dx^2}|_{x=0.5h} = EI\sum_{i=1}^{4} u_i^1 \frac{d^2\phi_i^1}{dx^2}|_{x=0.5h} \\
&= -EI\left(U_3\frac{d^2\phi_3^1}{dx^2} + U_4\frac{d^2\phi_4^1}{dx^2}\right)|_{x=0.5h} \\
&= \frac{q_0 h^2}{96} \qquad (6)
\end{aligned}
$$

Solution to Problem 5.9: We can exploit the symmetry about the middle of the beam and use two beam elements to analyze the problem. We have

$$
\begin{aligned}
h_1 &= 4 \text{ in.}, \quad (EI)_1 = 30\times 10^6 \times \frac{\pi}{64}(1.5)^4 = 7.455\times 10^6 \text{ lb-in}^2. \\
h_2 &= 6 \text{ in.}, \quad (EI)_2 = 30\times 10^6 \times \frac{\pi}{64}(2)^4 = 23.562\times 10^6 \text{ lb-in}^2
\end{aligned}
$$

and the element stiffness matrix is given by

$$
\frac{2E_eI_e}{h_e^3}\begin{bmatrix} 6 & -3h_e & -6 & -3h_e \\ -3h_e & 2h_e^2 & 3h_e & h_e^2 \\ -6 & 3h_e & 6 & 3h_e \\ -3h_e & h_e^2 & 3h_e & 2h_e^2 \end{bmatrix}
$$

The force vector on the element is zero, and on the second element it is

$$
\{f^{(2)}\} = \frac{q_0 h_e}{12}\{6 \quad -h_e \quad 6 \quad h_e\}^{\mathrm{T}}
$$

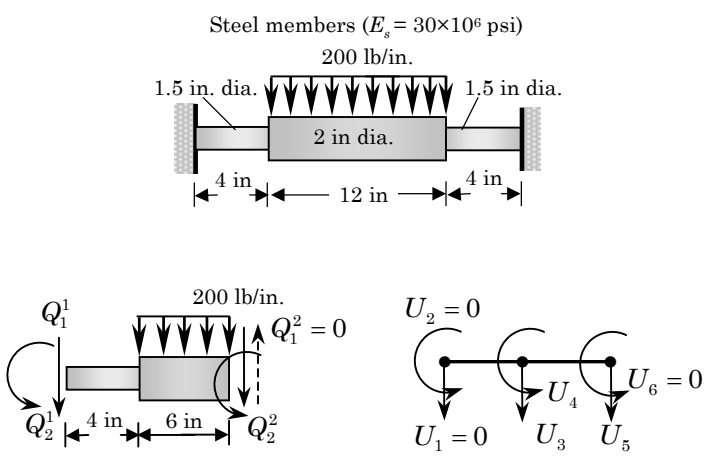

Figure P5.9

PROPRIETARY MATERIAL. ©The McGraw-Hill Companies, Inc. All rights reserved.

Thus, we have the assembled equations

$$10^6 \begin{bmatrix} 1.398 & -2.796 & -1.398 & -2.796 & 0 & 0 \\ & 7.455 & 2.796 & 3.728 & 0 & 0 \\ & & 2.707 & -1.131 & -1.309 & -3.927 \\ & & & 23.16 & 3.927 & 7.854 \\ & \text{symm.} & & & 1.309 & 3.927 \\ & & & & & 15.71 \end{bmatrix} \begin{Bmatrix} U_1 \\ U_2 \\ U_3 \\ U_4 \\ U_5 \\ U_6 \end{Bmatrix}$$

$$= \begin{Bmatrix} Q_1^{(1)} \\ Q_2^{(1)} \\ Q_3^{(1)} + Q_1^{(2)} \\ Q_4^{(1)} + Q_2^{(2)} \\ Q_3^{(2)} \\ Q_4^{(2)} \end{Bmatrix} + \begin{Bmatrix} 0 \\ 0 \\ 600 \\ -600 \\ 600 \\ 600 \end{Bmatrix}. \tag{1}$$

The boundary conditions are

$$w(0) = 0 \to U_1 = 0, \quad \frac{dw}{dx}(0) = 0 \to U_2 = 0$$
$$\frac{dw}{dx}(10) = 0 \to U_6 = 0, \quad \frac{dM}{dx}(10) = 0 \to Q_3^{(2)} = 0$$

The equilibrium of internal forces require

$$Q_3^{(1)} + Q_1^{(2)} = 0, \quad Q_4^{(1)} + Q_2^{(2)} = 0$$

Thus, the unknown displacements U_3, U_4 and U_5 can be determined from equations 3 through 5 of (1). The generalized displacements are

$$U_3 = 0.00252 \text{ in.}, \quad U_4 = -0.00083, \quad U_5 = 0.00546 \text{ in.}$$

The reaction force and bending moment at the left support and internal bending moment at the center of the beam can be determined from equations 1, 2, and 6 of (1).

Solution to Problem 5.10: We must use two elements, with

$$h_1 = 0.12 \text{ m}, \quad (EI)_1 = 200 \times 10^9 (0.03)^4 \frac{\pi}{64} = 7.952 \times 10^3 \text{ N-m}^2,$$
$$h_2 = 0.12 \text{ m}, \quad (EI)_2 = 200 \times 10^9 (0.02)^4 \frac{\pi}{64} = 1.571 \times 10^3 \text{ N-m}^2$$

PROPRIETARY MATERIAL. ©The McGraw-Hill Companies, Inc. All rights reserved.

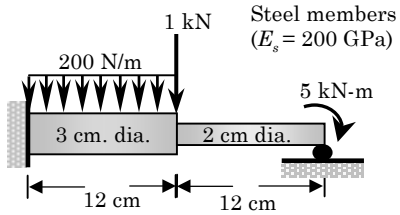

Figure P5.10

The boundary conditions are

$$w_0(0) = 0 \rightarrow U_1 = 0, \quad \frac{dw_0}{dx}(0) = 0 \rightarrow U_2 = 0, \quad w_0(24) = 0 \rightarrow U_5 = 0$$
$$M(24) = M_0 \rightarrow Q_4^{(2)} = M_0 = -5 \times 10^3 \text{ N-m}$$

Equilibrium of the internal forces require

$$Q_3^{(1)} + Q_1^{(2)} = F_0 = 10^3 \text{ N}, \quad Q_4^{(1)} + Q_2^{(2)} = 0$$

The assembled equations are

$$10^7 \begin{bmatrix} 5.5222 & -0.3313 & -5.5222 & -0.3313 & 0 & 0 \\ & 0.0265 & 0.3313 & 0.0133 & 0 & 0 \\ & & 6.6132 & 0.2659 & -1.0910 & -0.0655 \\ & & & 0.0317 & 0.0655 & 0.0026 \\ & & & & 1.0910 & 0.0655 \\ & & & & & 0.0052 \end{bmatrix} \begin{Bmatrix} U_1 \\ U_2 \\ U_3 \\ U_4 \\ U_5 \\ U_6 \end{Bmatrix}.$$

$$= \begin{Bmatrix} Q_1^{(1)} \\ Q_2^{(1)} \\ Q_3^{(1)} + Q_1^{(2)} \\ Q_4^{(1)} + Q_2^{(2)} \\ Q_3^{(2)} \\ Q_4^{(2)} \end{Bmatrix} + \begin{Bmatrix} 12 \\ -24 \\ 12 \\ 24 \\ 0 \\ 0 \end{Bmatrix}$$

The solution is

$$U_3 = -0.3002 \text{ cm}, \quad U_4 = 0.03767, \quad U_6 = -0.15184$$

Solution to Problem 5.11: The beam can be modeled with two elements of length h=5m. We have $[K^1] = [K^2]$ and $\{f^1\} = \{f^2\}$.

PROPRIETARY MATERIAL. ©The McGraw-Hill Companies, Inc. All rights reserved.

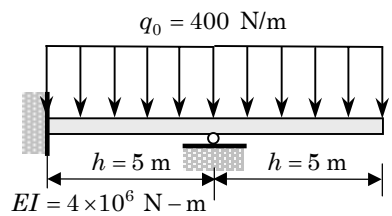

Figure P5.11

(a) The assembled equations are

$$\frac{2EI}{h^3}\begin{bmatrix} 6 & -3h & -6 & -3h & 0 & 0 \\ -3h & 2h^2 & 3h & h^2 & 0 & 0 \\ -6 & 3h & 6+6 & 3h-3h & -6 & -3h \\ -3h & h^2 & 3h-3h & 2h^2+2h^2 & 3h & h^2 \\ 0 & 0 & -6 & 3h & 6 & 3h \\ 0 & 0 & -3h & h^2 & 3h & 2h^2 \end{bmatrix}\begin{Bmatrix} U_1 \\ U_2 \\ U_3 \\ U_4 \\ U_5 \\ U_6 \end{Bmatrix}$$

$$= \frac{q_0 h}{12}\begin{Bmatrix} 6 \\ -h \\ 6+6 \\ h-h \\ 6 \\ h \end{Bmatrix} + \begin{Bmatrix} Q_1^1 \\ Q_2^1 \\ Q_3^1+Q_1^2 \\ Q_4^1+Q_2^2 \\ Q_3^2 \\ Q_4^2 \end{Bmatrix} \tag{1}$$

(b) The specified generalized displacements and forces are:

$$U_1 = U_2 = U_3 = 0; \quad Q_4^1 + Q_2^2 = 0, \quad Q_3^2 = 0, \; Q_4^2 = 0 \tag{2}$$

(c) The condensed equations for the unknown generalized displacements are (delete the first, second and third rows and columns from the assembled equations in Eqn (1))

$$\frac{2EI}{h^3}\begin{bmatrix} 4h^2 & 3h & h^2 \\ 3h & 6 & 3h \\ h^2 & 3h & 2h^2 \end{bmatrix}\begin{Bmatrix} U_4 \\ U_5 \\ U_6 \end{Bmatrix} = \frac{q_0 h}{12}\begin{Bmatrix} h-h \\ 6 \\ h \end{Bmatrix} \tag{3}$$

The equations for the unknown generalized forces are

$$\begin{Bmatrix} Q_1^1 \\ Q_2^1 \\ Q_3^1+Q_1^2 \end{Bmatrix} = \frac{2EI}{h^3}\begin{bmatrix} -3h & 0 & 0 \\ h^2 & 0 & 0 \\ 0 & 6 & -3h \end{bmatrix}\begin{Bmatrix} U_4 \\ U_5 \\ U_6 \end{Bmatrix} - \frac{q_0 h}{12}\begin{Bmatrix} 6 \\ -h \\ 12 \end{Bmatrix} \tag{4}$$

For the following values of the parameters, $h = 5$m, $q_0 = 400$ N/m, and $EI = 4 \times 10^6$ N-m^2, solution of equations (3) gives

$$U_4 = -0.0013021, \; U_5 = 0.014323\text{m}, \; U_6 = -0.0033854 \tag{5}$$

PROPRIETARY MATERIAL. ©The McGraw-Hill Companies, Inc. All rights reserved.

The bending moment at $x = 7.5$ m or $\bar{x} = 2.5$m is given by (note that $U_3 = 0$)

$$
\begin{aligned}
M^c &= -EI\frac{d^2w}{dx^2}|_{x=7.5} = EI\sum_{i=1}^{4} u_i^2 \frac{d^2\phi_i^2}{dx^2}|_{x=7.5} \\
&= EI\left(U_3\frac{d^2\phi_1^2}{dx^2} + U_4\frac{d^2\phi_2^2}{dx^2} + U_5\frac{d^2\phi_3^2}{dx^2} + U_6\frac{d^2\phi_4^2}{dx^2}\right)|_{x=7.5} \\
&= EI\left(U_3\frac{d^2\phi_1^2}{d\bar{x}^2} + U_4\frac{d^2\phi_2^2}{d\bar{x}^2} + U_5\frac{d^2\phi_3^2}{d\bar{x}^2} + U_6\frac{d^2\phi_4^2}{d\bar{x}^2}\right)|_{\bar{x}=2.5} \\
&= -1,666.67 \text{ N-m} \qquad (6)
\end{aligned}
$$

Solution to Problem 5.12: The assembled equations of the two-element mesh are

$$
\frac{2EI}{h^3}\begin{bmatrix} 6 & -3h & -6 & -3h & 0 & 0 \\ -3h & 2h^2 & 3h & h^2 & 0 & 0 \\ -6 & 3h & 6+6 & 3h-3h & -6 & -3h \\ -3h & h^2 & 3h-3h & 2h^2+2h^2 & 3h & h^2 \\ 0 & 0 & -6 & 3h & 6 & 3h \\ 0 & 0 & -3h & h^2 & 3h & 2h^2 \end{bmatrix}\begin{Bmatrix} U_1 \\ U_2 \\ U_3 \\ U_4 \\ U_5 \\ U_6 \end{Bmatrix}
$$

$$
= \begin{Bmatrix} Q_1^1 \\ Q_2^1 \\ Q_3^1 + Q_1^2 \\ Q_4^1 + Q_2^2 \\ Q_3^2 \\ Q_4^2 \end{Bmatrix} + \frac{q_0 h}{12}\begin{Bmatrix} 0 \\ 0 \\ 0+6 \\ 0-h \\ 6 \\ h \end{Bmatrix}
$$

The boundary and balance conditions are

$$
U_1 = 0, \quad Q_2^1 = aF_0, \quad U_3 = 0, \quad Q_4^1 + Q_2^2 = 0, \quad Q_3^2 = -F_1, \quad Q_4^2 = 0
$$

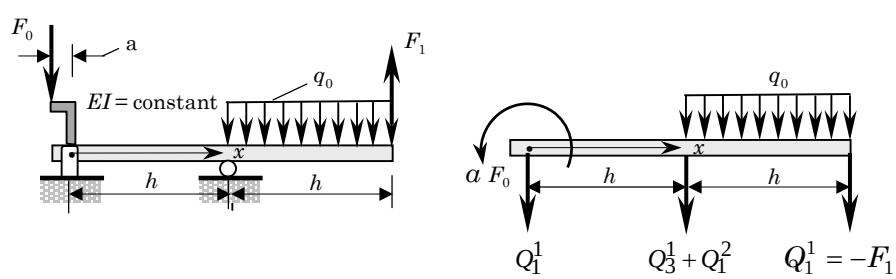

Figure P5.12

PROPRIETARY MATERIAL. ©The McGraw-Hill Companies, Inc. All rights reserved.

Hence, the condensed equations are

$$\frac{2EI}{h^3}\begin{bmatrix} 2h^2 & h^2 & 0 & 0 \\ h^2 & 4h^2 & 3h & h^2 \\ 0 & 3h & 6 & 3h \\ 0 & h^2 & 3h & 2h^2 \end{bmatrix}\begin{Bmatrix} U_2 \\ U_4 \\ U_5 \\ U_6 \end{Bmatrix} = \begin{Bmatrix} aF_0 \\ 0 \\ -F_1 \\ 0 \end{Bmatrix} + \frac{q_0 h}{12}\begin{Bmatrix} 0 \\ -h \\ 6 \\ h \end{Bmatrix}$$

$$\begin{Bmatrix} Q_1^1 \\ Q_3^1 + Q_1^2 \end{Bmatrix} = \frac{2EI}{h^3}\begin{bmatrix} -3h & -3h & 0 & 0 \\ 3h & 0 & -6 & -3h \end{bmatrix}\begin{Bmatrix} U_2 \\ U_4 \\ U_5 \\ U_6 \end{Bmatrix} - \frac{q_0 h}{12}\begin{Bmatrix} 0 \\ 6 \end{Bmatrix}$$

Solution to Problem 5.13: The primary objective of this problem is to compute the force vector for element 1. The distributed force is given by $q(x) = q_0(x/h) = 100x$. The components of force vector due to the distributed load are given by

$$q_i^{(1)} = \int_0^h q(x)\phi_i(x)\ dx = \frac{q_0}{h}\int_0^h x\phi_i(x)\ dx$$

where the interpolation functions in Eq. (9.58) are used (with $\bar{x} = x$). We obtain ($q_0 = 500$ and $h = 5$)

$$\{q^{(1)}\} = \frac{q_0 h}{60}\begin{Bmatrix} 9 \\ -2h \\ 21 \\ 3h \end{Bmatrix} = \begin{Bmatrix} 375.00 \\ -416.67 \\ 875.00 \\ 625.00 \end{Bmatrix}$$

The boundary and balance conditions for the three-element mesh are

$$U_1 = 0,\ U_7 = 0,\quad Q_2^{(1)} = 0,\quad Q_3^{(1)} + Q_1^{(2)} = 0$$

$$Q_4^{(1)} + Q_2^{(2)} = 0,\quad Q_3^{(2)} + Q_1^{(3)} = 1,000,\quad Q_4^{(2)} + Q_2^{(3)} = 0,\quad Q_4^{(3)} = 0.$$

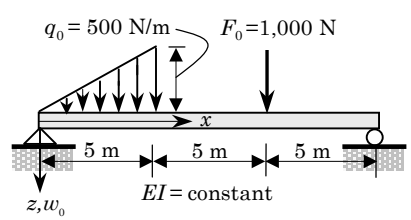

Figure P5.13

PROPRIETARY MATERIAL. ©The McGraw-Hill Companies, Inc. All rights reserved.

The solution is given by

$$\bar{U}_2 = -0.24826,\ \bar{U}_3 = 0.99537,\ \bar{U}_4 = -0.11111,\ \bar{U}_5 = 0.98380$$
$$\bar{U}_6 = 0.11806,\ \bar{U}_8 = 0.23611,$$

where $\bar{U}_i = U_i(EI \times 10^{-5})$

Solution to Problem 5.14: (a) The assembled equations are

$$\frac{2EI}{h^3}\begin{bmatrix} 12 & -6h & -12 & -6h & 0 & 0 \\ -6h & 4h^2 & 6h & 2h^2 & 0 & 0 \\ -12 & 6h & 12+6 & 6h-3h & -6 & -3h \\ -6h & 2h^2 & 6h-3h & 4h^2+2h^2 & 3h & h^2 \\ 0 & 0 & -6 & 3h & 6 & 3h \\ 0 & 0 & -3h & h^2 & 3h & 2h^2 \end{bmatrix}\begin{Bmatrix} U_1 \\ U_2 \\ U_3 \\ U_4 \\ U_5 \\ U_6 \end{Bmatrix}$$

$$= \begin{Bmatrix} Q_1^1 \\ Q_2^1 \\ Q_3^1 + Q_1^2 \\ Q_4^1 + Q_2^2 \\ Q_3^2 \\ Q_4^2 \end{Bmatrix} + \frac{q_0 h}{12}\begin{Bmatrix} 6 \\ -h \\ 6+0 \\ h+0 \\ 0 \\ 0 \end{Bmatrix}$$

(b) The boundary and balance conditions are

$$U_1 = 0,\quad U_2 = 0,\quad Q_3^1 + Q_1^2 = F_0,\quad Q_4^1 + Q_2^2 = -d \cdot F_0,\quad Q_3^2 = -kU_5,\quad Q_4^2 = 0$$

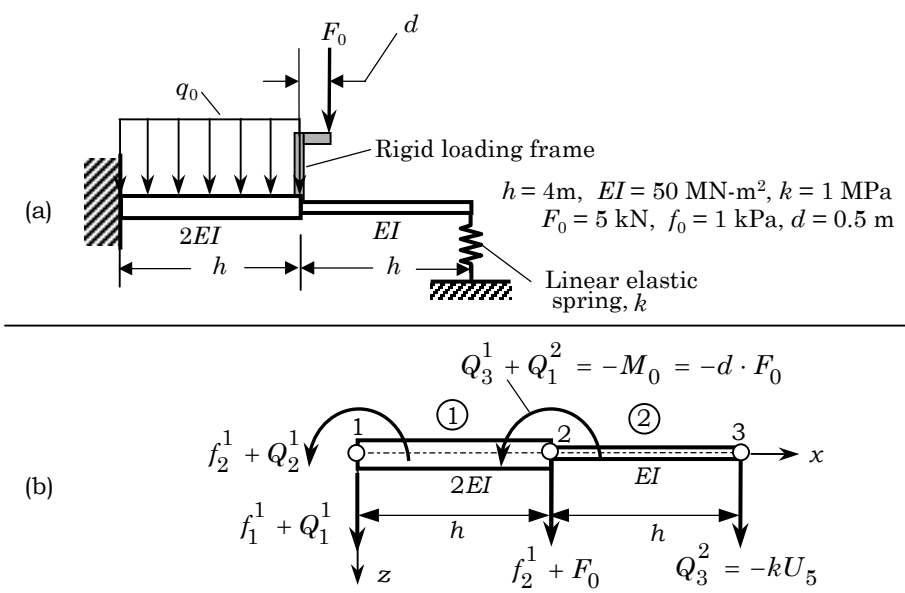

Figure P5.14

PROPRIETARY MATERIAL. ©The McGraw-Hill Companies, Inc. All rights reserved.

The condensed equations are

$$\frac{2EI}{h^3}\begin{bmatrix} 18 & 3h & -6 & -3h \\ 3h & 6h^2 & 3h & h^2 \\ -6 & 3h & 6+\alpha & 3h \\ -3h & h^2 & 3h & 2h^2 \end{bmatrix}\begin{Bmatrix} U_3 \\ U_4 \\ U_5 \\ U_6 \end{Bmatrix} = \begin{Bmatrix} F_0 \\ -dF_0 \\ 0 \\ 0 \end{Bmatrix} + \frac{q_0 h}{12}\begin{Bmatrix} 6 \\ h \\ 0 \\ 0 \end{Bmatrix}$$

$$\begin{Bmatrix} Q_1^1 \\ Q_2^1 \end{Bmatrix} = \frac{2EI}{h^3}\begin{bmatrix} -12 & -6h \\ 6h & 2h^2 \end{bmatrix}\begin{Bmatrix} U_3 \\ U_4 \end{Bmatrix} - \frac{q_0 h}{12}\begin{Bmatrix} 6 \\ -h \end{Bmatrix}$$

where

$$\alpha = \frac{kh^3}{2EI}$$

Solution to Problem 5.15: (a) For this problem, we have $[K^1] = [K^2]$ and $\{f^2\} = \{0\}$. The assembled set of equations are

$$\frac{2EI}{L^3}\begin{bmatrix} 6 & -3L & -6 & -3L & 0 & 0 \\ -3L & 2L^2 & 3L & L^2 & 0 & 0 \\ -6 & 3L & 6+6 & 3L-3L & -6 & -3L \\ -3L & L^2 & 3L-3L & 2L^2+2L^2 & 3L & L^2 \\ 0 & 0 & -6 & 3L & 6 & 3L \\ 0 & 0 & -3L & L^2 & 3L & 2L^2 \end{bmatrix}\begin{Bmatrix} U_1 \\ U_2 \\ U_3 \\ U_4 \\ U_5 \\ U_6 \end{Bmatrix} =$$

$$= \begin{Bmatrix} Q_1^1 \\ Q_2^1 \\ Q_3^1 + Q_1^2 \\ Q_4^1 + Q_2^2 \\ Q_3^2 \\ Q_4^2 \end{Bmatrix} + \frac{q_0 L}{12}\begin{Bmatrix} 6 \\ -L \\ 6+0 \\ L+0 \\ 0 \\ 0 \end{Bmatrix} \tag{1}$$

where $L = 5$ m, $EI = 2 \times 10^6$ N-m^2 and $q_0 = 1,000$ N/m.

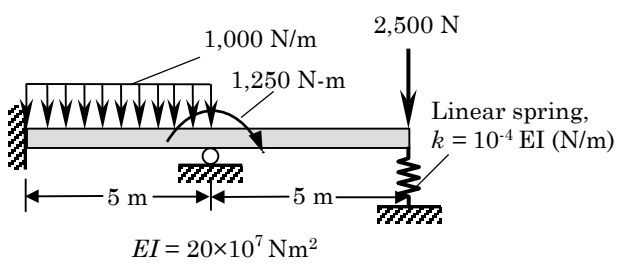

Figure P5.15

PROPRIETARY MATERIAL. ©The McGraw-Hill Companies, Inc. All rights reserved.

(b) The specified generalized displacements and forces are

$$U_1 = U_2 = U_3 = 0; \quad Q_4^1 + Q_2^2 = -M_0, \quad Q_3^2 = F_0 - kU_5, \quad Q_4^2 = 0 \tag{2}$$

(c) The condensed equations for the generalized displacements are,

$$\frac{2EI}{L^3}\begin{bmatrix} 4L^2 & 3L & L^2 \\ 3L & 6 & 3L \\ L^2 & 3L & 2L^2 \end{bmatrix}\begin{Bmatrix} U_4 \\ U_5 \\ U_6 \end{Bmatrix} = -\frac{q_0 L}{12}\begin{Bmatrix} L \\ 0 \\ 0 \end{Bmatrix} + \begin{Bmatrix} -M_0 \\ F_0 - kU_5 \\ 0 \end{Bmatrix} \tag{3}$$

or

$$\frac{2EI}{L^3}\begin{bmatrix} 4L^2 & 3L & L^2 \\ 3L & 6+\mu & 3L \\ L^2 & 3L & 2L^2 \end{bmatrix}\begin{Bmatrix} U_4 \\ U_5 \\ U_6 \end{Bmatrix} = \frac{q_0 L}{12}\begin{Bmatrix} L \\ 0 \\ 0 \end{Bmatrix} + \begin{Bmatrix} -M_0 \\ F_0 \\ 0 \end{Bmatrix} \tag{4}$$

where $\mu = kL^3/2EI$. Using the given values of the parameters

$$L = 5, \; q_0 = 1,000, \; M_0 = -1,250, \; F_0 = 2,500, \; EI = 2 \times 10^6, \; k = 10^{-4}EI$$

we obtain the solution,

$$U_4 = -0.7237 \times 10^{-4}, \quad U_5 = 0.0879 \times 10^{-2}\text{m}, \quad U_6 = -0.2275 \times 10^{-3} \tag{5}$$

The condensed equations for the generalized forces are given by

$$\begin{Bmatrix} Q_1^1 \\ Q_2^1 \\ Q_3^1 + Q_1^2 \end{Bmatrix} = \frac{2EI}{L^3}\begin{bmatrix} -3L & 0 & 0 \\ L^2 & 0 & 0 \\ 0 & -6 & -3L \end{bmatrix}\begin{Bmatrix} U_4 \\ U_5 \\ U_6 \end{Bmatrix} - \frac{q_0 L}{12}\begin{Bmatrix} 6 \\ -L \\ 6 \end{Bmatrix} \tag{6}$$

The bending moment at a point, for example at $x = 7.5$ m or $\bar{x} = 2.5$m, can be computed from (note that $U_3 = 0$)

$$\begin{aligned} M^c &= EI\frac{d^2w}{dx^2}|_{x=7.5} = EI\sum_{i=1}^{4} u_i^2 \frac{d^2\phi_i^2}{dx^2}|_{x=7.5} \\ &= EI\left(U_3\frac{d^2\phi_1^2}{dx^2} + U_4\frac{d^2\phi_2^2}{dx^2} + U_5\frac{d^2\phi_3^2}{dx^2} + U_6\frac{d^2\phi_4^2}{dx^2}\right)|_{x=7.5} \\ &= EI\left(U_3\frac{d^2\phi_1^2}{d\bar{x}^2} + U_4\frac{d^2\phi_2^2}{d\bar{x}^2} + U_5\frac{d^2\phi_3^2}{d\bar{x}^2} + U_6\frac{d^2\phi_4^2}{d\bar{x}^2}\right)|_{\bar{x}=2.5} \\ &= 6,206 \text{ N-m} \end{aligned} \tag{7}$$

Solution to Problem 5.16: This problem can be modeled with four elements with $h_1 = h_2 = h_3 = h_4 = 5$ ft. The main objective here is to represent the applied loads appropriately. The global node 2 will have a downward load of 1,000 lbs. and bending moment of –1,000 ft–lbs (CCW). The total size of the assembled global stiffness matrix is 10×10. This problem may be solved by FEM1D. The main steps are outlined here.

The boundary and balance conditions are

$$U_1 = 0, \; Q_2^1 = 0, \; Q_3^1 + Q_1^2 = 1,000, \; Q_4^1 + Q_2^2 = 1,000, \; U_7 = 0, \; Q_3^2 + Q_1^3 = 0$$
$$Q_4^2 + Q_2^3 = 0, \; Q_3^3 + Q_1^4 = \text{unknown}, \; Q_4^3 + Q_2^4 = 0, \; Q_3^4 = 0, \; Q_4^4 = 0$$

PROPRIETARY MATERIAL. ©The McGraw-Hill Companies, Inc. All rights reserved.

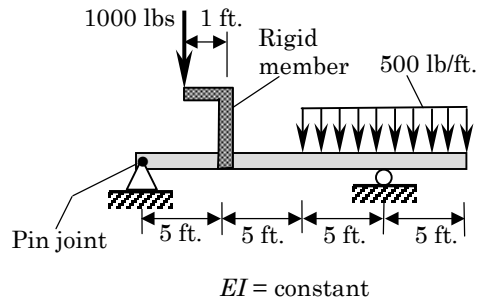

Figure P5.16

(a) The condensed equations for the unknown generalized displacements is given by deleting the rows and columns corresponding to the specified generalized displacements. Thus, by deleting rows and columns 1 and 7, one obtains a 8×8 matrix equation.

(b) The unknown generalized forces Q_1^1 and $Q_3^3 + Q_1^4$ can be computed from equations 1 and 7 of the assembled set.

(c) The bending moment at $x = 2.5$ ft is given by

$$M^c = EI\frac{d^2w}{dx^2}|_{x=2.5} = EI\sum_{i=1}^{4} u_i^1 \frac{d^2\phi_i^1}{dx^2}|_{x=0.5h}$$
$$= EI\left(U_2\frac{d^2\phi_2^1}{dx^2} + U_3\frac{d^2\phi_3^1}{dx^2} + U_4\frac{d^2\phi_4^1}{dx^2}\right)|_{x=2.5}$$

The generalized displacements are given by

$$\bar{U}_2 = -1.2187,\ \bar{U}_3 = 4.5660 \text{ ft.},\ \bar{U}_4 = -0.3021,\ \bar{U}_5 = 3.2986 \text{ ft.}$$

$$\bar{U}_6 = 0.6979,\ \bar{U}_8 = -0.01042,\ \bar{U}_9 = 3.9583 \text{ ft.},\ \bar{U}_{10} = -1.0521$$

where $\bar{U}_i = U_i(EI \times 10^{-4})$. The deflection, rotation, bending moment and shear force at $x = 2.5$ ft. are given by

$$w_c = 2.8559 \times 10^4/EI \text{ in}, \quad \theta_c = -0.9895 \times 10^4/EI$$

$$M^c = -1833.33 \text{ lb-ft}, \quad V^c = -733.33 \text{ lbs}$$

PROPRIETARY MATERIAL. ©The McGraw-Hill Companies, Inc. All rights reserved.

Solution to Problem 5.17: (a) The assembled stiffness matrix of the beam structure (the displacement degrees of freedom associated with the fixed end are set to zero) is 8×8:

$$\frac{EI}{L^3}\begin{bmatrix} 12+12 & -6L-6L & -12 & -6L & 0 & 0 & -12 & 6L \\ -6L-6L & 4L^2+4L^2 & 6L & 4L^2 & 0 & 0 & 6L & 2L^2 \\ -12 & 6L & 12+12 & 6L-6L & -12 & -6L & 0 & 0 \\ -6L & 2L^2 & 6L-6L & 4L^2+4L^2 & 6L & 2L^2 & 0 & 0 \\ 0 & 0 & -12 & 6L & 12 & 6L & 0 & 0 \\ 0 & 0 & -6L & 2L^2 & 6L & 4L^2 & 0 & 0 \\ -12 & 6L & 0 & 0 & 0 & 0 & 12 & 6L \\ -6L & 2L^2 & 0 & 0 & 0 & 0 & 6L & 4L^2 \end{bmatrix}$$

$$\times \begin{Bmatrix} 0 \\ 0 \\ U_1 \\ U_2 \\ U_3 \\ U_4 \\ U_5 \\ U_6 \end{Bmatrix} = \begin{Bmatrix} Q_1^1+Q_1^3 \\ Q_2^1+Q_2^3 \\ Q_3^1+Q_1^2 \\ Q_4^1+Q_2^2 \\ Q_3^2 \\ Q_4^2 \\ Q_3^3 \\ Q_4^3 \end{Bmatrix} + \frac{q_0 L}{12}\begin{Bmatrix} 0+6 \\ 0-L \\ 0+0 \\ 0+0 \\ 0 \\ 0 \\ 6 \\ L \end{Bmatrix}$$

Using the free-body-diagram of the springs, we can write

$$Q_3^1 + Q_1^2 = k_1(U_5 - U_1), \quad Q_4^1 + Q_2^2 = -k_2 U_3, \quad Q_3^3 = -k_2(U_5 - U_1)$$

Hence, the condensed equations become

$$\frac{EI}{L^3}\begin{bmatrix} 24+\frac{k_1L^3}{EI} & 0 & -12 & -6L & -\frac{k_1L^3}{EI} & 0 \\ 0 & 8L^2 & 6L & 2L^2 & 0 & 0 \\ -12 & 6L & 12+\frac{k_2L^3}{EI} & 6L & 0 & 0 \\ -6L & 2L^2 & 6L & 4L^2 & 0 & 0 \\ -\frac{k_1L^3}{EI} & 0 & 0 & 0 & 12+\frac{k_1L^3}{EI} & 6L \\ 0 & 0 & 0 & 0 & 6L & 4L^2 \end{bmatrix}\begin{Bmatrix} U_1 \\ U_2 \\ U_3 \\ U_4 \\ U_5 \\ U_6 \end{Bmatrix} = \frac{q_0 L}{12}\begin{Bmatrix} 0 \\ 0 \\ 0 \\ 0 \\ 6 \\ L \end{Bmatrix}$$

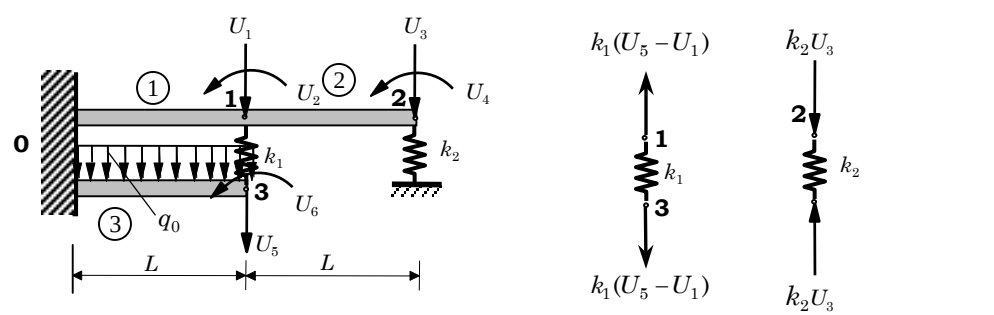

$$Q_3^1 + Q_1^2 = k_1(U_5 - U_1), \quad Q_3^3 = -k_1(U_5 - U_1), \quad Q_3^2 = -k_2 U_3$$

Figure P5.17

PROPRIETARY MATERIAL. © The McGraw-Hill Companies, Inc. All rights reserved.

Solution to Problem 5.18: The problem can be represented by two elements: $h_1 = 8$ ft. and $h_2 = 6$ ft. The main objective of this problem is to be able to compute the force vector for element 1:

$$q_i^{(1)} = \int_0^{h_1} q(x)\phi_i(x)\ dx = \int_0^{h_1} (a + bx^2)\phi_i(x)\ dx$$

where $a = q_0, b = -q_0/h^2, q_0 = 1,000$ lb/ft and $h_1 = 8$ ft. The components of force vector due to the distributed load can be computed using the above formula

$$\{q^{(1)}\} = \frac{q_0 h_1}{60} \begin{Bmatrix} 26 \\ -4h_1 \\ 14 \\ 3h_1 \end{Bmatrix} = \begin{Bmatrix} 3,466.7 \\ -4,266.7 \\ 1,866.7 \\ 3,200.0 \end{Bmatrix}$$

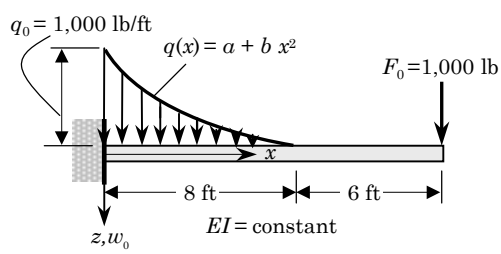

Figure P5.18

The specified boundary conditions and balance of secondary variables are

$$U_1 = U_2 = 0; \quad Q_3^1 + Q_1^2 = 0, \quad Q_4^1 + Q_2^2 = 0, \quad Q_3^2 = 1,000, \quad Q_4^2 = 0.$$

The solution is (in ft and radians)

$$\bar{U}_3 = 0.3868,\ \bar{U}_4 = -0.6613,\ \bar{U}_5 = 0.7836,\ \bar{U}_6 = -0.6613$$

where $\bar{U}_i = U_i(EI \times 10^{-6})$. The bending moment and shear force at $x = 3$ ft., for example, are $M^c = 11,133$ ft-lb. and $V^c = -2,866.7$ lb. The values at $x = 0$ are: $M(0) = 19,733$ ft-lbs. and $V(0) = -2,866.7$ lbs, which are quite a bit in error. The values obtained from equilibrium are $M(0) = 24,000$ ft-lbs. and $V(0) = -6,333.3$ lbs

---

Solution to Problem 5.19: The beam ABC (see Fig. P5.19) rests on simple supports at points A and B and is supported by a cable at point C. The beam has total length $2L$ and supports a uniform load of intensity q. Prior to the application of the uniform load, there is no force in the cable nor is there any slack in the cable. When the uniform load is applied, the beam deflects downward at point C and a

PROPRIETARY MATERIAL. ©The McGraw-Hill Companies, Inc. All rights reserved.

tensile force T develops in the cable. We are required to determine the magnitude of force T using the finite element method.

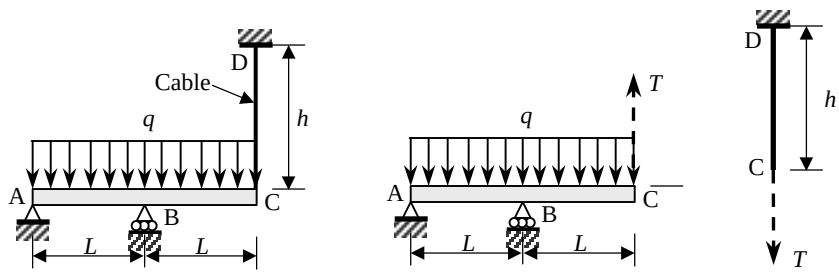

Figure P5.19

From Fig. P5.19, we have (using two elements) the following global system of assembled equations:

$$\frac{2EI}{L^3}\begin{bmatrix} 6 & -3L & -6 & -3L & 0 & 0 \\ -3L & 2L^2 & 3L & L^2 & 0 & 0 \\ -6 & 3L & 6+6 & 3L-3L & -6 & -3L \\ -3L & L^2 & 3L-3L & 2L^2+2L^2 & 3L & L^2 \\ 0 & 0 & -6 & 3L & 6 & 3L \\ 0 & 0 & -3L & L^2 & 3L & 2L^2 \end{bmatrix}\begin{Bmatrix} U_1 \\ U_2 \\ U_3 \\ U_4 \\ U_5 \\ U_6 \end{Bmatrix} =$$

$$= \begin{Bmatrix} Q_1^1 \\ Q_2^1 \\ Q_3^1+Q_1^2 \\ Q_4^1+Q_2^2 \\ Q_3^2 \\ Q_4^2 \end{Bmatrix} - \frac{qL}{12}\begin{Bmatrix} 6 \\ -L \\ 6+6 \\ L-L \\ 6 \\ L \end{Bmatrix} \tag{1}$$

The boundary conditions of the problem are

$$U_1 = 0, \quad U_3 = 0, \quad Q_2^1 = 0, \quad Q_3^2 = T, \quad Q_4^2 = 0 \tag{2}$$

and the balance conditions are

$$Q_3^1 + Q_1^2 = \text{unknown reaction}, \quad Q_4^1 + Q_2^2 = 0 \tag{3}$$

We know that the elongation in the cable is U_5 that causes the tension T:

$$T = \frac{E_c A_c}{h} U_5 = kU_5, \quad k = \frac{E_c A_c}{h} \tag{4}$$

PROPRIETARY MATERIAL. ©The McGraw-Hill Companies, Inc. All rights reserved.

Thus the condensed equations are

$$\frac{2EI}{L^3}\begin{bmatrix} 2L^2 & L^2 & 0 & 0 \\ L^2 & 4L^2 & 3L & L^2 \\ 0 & 3L & 6+\alpha & 3L \\ 0 & L^2 & 3L & 2L^2 \end{bmatrix}\begin{Bmatrix} U_2 \\ U_4 \\ U_5 \\ U_6 \end{Bmatrix} = -\frac{qL}{12}\begin{Bmatrix} -L \\ 0 \\ 6 \\ L \end{Bmatrix} \tag{5}$$

where $\alpha = \frac{kL^3}{2EI}$. Upon solving the equations, we obtain U_5; then tension T in the cable can be determined from the first equation in (4):

$$U_5 = \frac{3qL^4}{4(3EI + 2kL^3)}, \quad T = \frac{E_c A_c}{h} U_5 \tag{6}$$

Solution to New Problem 5.5: Using the symmetry at $x = L/2$ the problem can be modeled by one element. The main objective of this problem should be to make the student compute the force vector:

$$f_i^1 = \int_0^{h_1} f(x)\phi_i(x)\ dx = \int_0^{h_1} q_0 \sin\frac{\pi x}{L}\phi_i(x)\ dx$$

The following integrals are useful:

$$\int x \sin ax\ dx = \frac{1}{a^2}\sin ax - \frac{x}{a}\cos ax$$
$$\int x^2 \sin ax\ dx = \frac{2x}{a^2}\sin ax - \frac{a^2x^2 - 2}{a^3}\cos ax$$
$$\int x^3 \sin ax\ dx = \frac{3a^2x^2 - 6}{a^4}\sin ax - \frac{a^2x^3 - 6x}{a^3}\cos ax$$

For example, we have

$$\begin{aligned} f_2^1 &= q_0 \int_0^h \sin\frac{\pi x}{L}\phi_2(x)\ dx \\ &= -q_0 \int_0^h \sin\frac{\pi x}{L}\left(x - 2\frac{x^2}{h} + \frac{x^3}{h^2}\right)\ dx = -\frac{8q_0L^2}{\pi^3}\left(1 - \frac{3}{\pi}\right) \\ f_3^1 &= q_0 \int_0^h \sin\frac{\pi x}{L}\phi_3(x)\ dx \\ &= q_0 \int_0^h \sin\frac{\pi x}{L}\left(3\frac{x^2}{h^2} - 2\frac{x^3}{h^3}\right)\ dx = \frac{24q_0L}{\pi^3}\left(\frac{4}{\pi} - 1\right) \end{aligned}$$

where q_0 is the magnitude of the transverse load acting downwards.

PROPRIETARY MATERIAL. ©The McGraw-Hill Companies, Inc. All rights reserved.

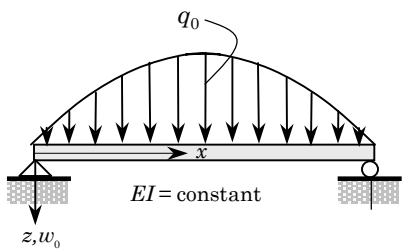

Figure NP5.5

The specified boundary conditions are

$$U_1 = U_4 = 0, \quad Q_2^1 = 0, \quad Q_3^1 = 0$$

The condensed equations for the generalized displacements are

$$\frac{2EI}{h^3}\begin{bmatrix} 2h^2 & 3h \\ 3h & 6 \end{bmatrix}\begin{Bmatrix} U_2 \\ U_3 \end{Bmatrix} = \begin{Bmatrix} f_2^1 \\ f_3^1 \end{Bmatrix}$$

The solution is,

$$U_2 = \frac{h}{2EI}\left(2f_2^1 - hf_3^1\right), \quad U_3 = \frac{h^2}{6EI}\left(2hf_3^1 - 3f_2^1\right)$$

Solution to Problem 5.20: We use a two-element mesh, with element 1 having the hinge at its node 2, while element 2 is the usual beam element. The assembled system of equations is

$$EI\begin{bmatrix} \frac{3}{a^3} & -\frac{3}{a^2} & -\frac{3}{a^3} & 0 & 0 & 0 \\ -\frac{3}{a^2} & \frac{3}{a} & \frac{3}{a^2} & 0 & 0 & 0 \\ -\frac{3}{a^3} & \frac{3}{a^2} & \frac{3}{a^3}+\frac{12}{b^3} & -\frac{6}{b^2} & -\frac{12}{b^3} & -\frac{6}{b^2} \\ 0 & 0 & -\frac{6}{b^2} & \frac{4}{b} & \frac{6}{b^2} & \frac{2}{b} \\ 0 & 0 & -\frac{12}{b^3} & \frac{6}{b^2} & \frac{12}{b^3} & \frac{6}{b^2} \\ 0 & 0 & -\frac{6}{b^2} & \frac{2}{b} & \frac{6}{b^2} & \frac{4}{b} \end{bmatrix}\begin{Bmatrix} w_1^1 \\ \theta_1^1 \\ w_2^1 = w_1^2 \\ \theta_1^2 \\ w_2^2 \\ \theta_2^2 \end{Bmatrix}$$

$$= \begin{Bmatrix} Q_1^1 \\ Q_2^1 \\ Q_3^1 + Q_1^2 \\ Q_4^1 + Q_2^2 \\ Q_3^2 \\ Q_4^2 \end{Bmatrix} + \frac{q_0 b}{12}\begin{Bmatrix} 0 \\ 0 \\ 6 \\ -b \\ 6 \\ b \end{Bmatrix} \tag{1}$$

PROPRIETARY MATERIAL. ©The McGraw-Hill Companies, Inc. All rights reserved.

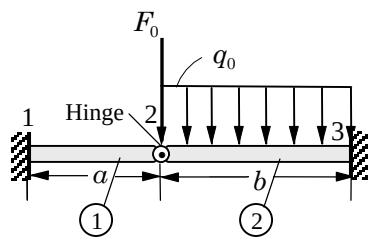

Figure P5.20

Using the boundary conditions

$$w_1^1 = 0, \quad \theta_1^1 = 0, \quad w_2^2 = 0, \quad \theta_2^2 = 0, \quad Q_3^1 + Q_1^2 = F_0, \quad Q_4^1 + Q_2^2 = 0 \tag{2}$$

we obtain the condensed equations

$$EI \begin{bmatrix} \frac{3}{a^3} + \frac{12}{b^3} & -\frac{6}{b^2} \\ -\frac{6}{b^2} & \frac{4}{b} \end{bmatrix} \begin{Bmatrix} w_2^1 = w_1^2 \\ \theta_1^2 \end{Bmatrix} = \frac{q_0 b}{12} \begin{Bmatrix} 6 \\ -b \end{Bmatrix} + \begin{Bmatrix} F_0 \\ 0 \end{Bmatrix} \tag{3}$$

and the solution is given by

$$\begin{aligned} w_2^1 = w_1^2 &= \frac{1}{EI}\left(\frac{q_0 b^4}{8} + \frac{F_0 b^3}{3}\right)\frac{a^3}{a^3+b^3} \\ \theta_1^2 &= \frac{1}{EI}\left(\frac{q_0(8a^3 - b^3)}{48} + \frac{F_0 a^3}{2b}\right)\frac{b^3}{a^3+b^3} \end{aligned} \tag{4}$$

Problem 5.21: Analyze Problem 5.8 using the reduced-integration Timoshenko beam finite element (RIE). Use a value of $\frac{5}{6}$ for the shear correction factor and $\nu = 0.25$.

Solution: (a) The assembled equations are given by

$$\left(\frac{GAK_s}{4h}\right) \begin{bmatrix} 4 & -2h & -4 & -2h & 0 & 0 \\ -2h & h^2+\alpha & 2h & h^2-\alpha & 0 & 0 \\ -4 & 2h & 4+4 & 2h-2h & -4 & -2h \\ -2h & h^2-\alpha & 2h-2h & 2(h^2+\alpha) & 2h & h^2-\alpha \\ 0 & 0 & -4 & 2h & 4 & 2h \\ 0 & 0 & -2h & h^2-\alpha & 2h & h^2+\alpha \end{bmatrix} \begin{Bmatrix} U_1 \\ U_2 \\ U_3 \\ U_4 \\ U_5 \\ U_6 \end{Bmatrix}$$

$$= \frac{q_0 h}{2} \begin{Bmatrix} 1 \\ 0 \\ 1+0 \\ 0 \\ 0 \\ 0 \end{Bmatrix} + \begin{Bmatrix} Q_1^1 \\ Q_2^1 \\ Q_3^1 + Q_1^2 \\ Q_4^1 + Q_2^2 \\ Q_3^2 \\ Q_4^2 \end{Bmatrix}, \quad \alpha = \frac{4EI}{GAK_s} \tag{1}$$

PROPRIETARY MATERIAL. ©The McGraw-Hill Companies, Inc. All rights reserved.

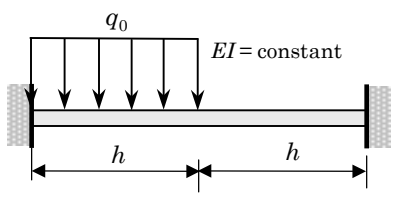

Figure P5.21

(b) The specified generalized displacements and forces are

$$U_1 = U_2 = U_5 = U_6 = 0; \quad Q_3^1 + Q_1^2 = 0, \quad Q_4^1 + Q_2^2 = 0 \tag{2}$$

(c) The condensed equations for the generalized displacements are

$$\left(\frac{GAK_s}{4h}\right)\begin{bmatrix} 8 & 0 \\ 0 & 2(h^2+\alpha) \end{bmatrix}\begin{Bmatrix} U_3 \\ U_4 \end{Bmatrix} = \frac{q_0 h}{2}\begin{Bmatrix} 1 \\ 0 \end{Bmatrix} \tag{3}$$

Solving Eqn. (3), we obtain (for $\nu = 0.25$, $A = 12I/H^2$ and $K_s = 5/6 \rightarrow \alpha = H^2$, H being the height of the beam)

$$U_3 = \frac{q_0 h^2}{4GAK_s} = \frac{q_0 h^4}{16EI}\left(\frac{H}{h}\right)^2, \quad U_4 = 0 \tag{4}$$

which is clearly not a good solution; the Euler–Bernoulli beam solution is

$$U_3 = \frac{q_0 h^4}{48EI}, \quad U_4 = \frac{q_0 h^3}{96EI}$$

An increased number of elements will improve the result.

The condensed equations for the generalized forces (i.e., reactions at the clamped ends) are given by

$$\begin{aligned}
Q_1^1 &= -\frac{q_0 h}{2} - (4U_3 + 2hU_4)\frac{GAK_s}{4h} = -\frac{3}{4}q_0 h \\
Q_2^1 &= [2hU_3 + (h^2-\alpha)U_4]\frac{GAK_s}{4h} = \frac{1}{8}q_0 h^2 \\
Q_3^2 &= (-4U_3 + 2hU_4)\frac{GAK_s}{4h} = -\frac{1}{4}q_0 h \\
Q_4^2 &= [-2hU_3 + (h^2-\alpha)U_4]\frac{GAK_s}{4h} = -\frac{1}{8}q_0 h^2
\end{aligned} \tag{5}$$

PROPRIETARY MATERIAL. ©The McGraw-Hill Companies, Inc. All rights reserved.

Problem 5.22: Analyze Problem 5.8 using the consistent interpolation (quadratic w and linear Ψ) Timoshenko beam element (CIE-1). Use a value of $\frac{5}{6}$ for the shear correction factor and $\nu = 0.25$.

Solution: This problem differs from Problem 5.21 only in the load vector. (a) The assembled equations are given by

$$\left(\frac{GAK_s}{4h}\right)\begin{bmatrix} 4 & -2h & -4 & -2h & 0 & 0 \\ -2h & h^2+\alpha & 2h & h^2-\alpha & 0 & 0 \\ -4 & 2h & 4+4 & 2h-2h & -4 & -2h \\ -2h & h^2-\alpha & 2h-2h & 2(h^2+\alpha) & 2h & h^2-\alpha \\ 0 & 0 & -4 & 2h & 4 & 2h \\ 0 & 0 & -2h & h^2-\alpha & 2h & h^2+\alpha \end{bmatrix}\begin{Bmatrix} U_1 \\ U_2 \\ U_3 \\ U_4 \\ U_5 \\ U_6 \end{Bmatrix}$$

$$= \frac{q_0 h}{12}\begin{Bmatrix} 6 \\ -h \\ 6+0 \\ h \\ 0 \\ 0 \end{Bmatrix} + \begin{Bmatrix} Q_1^1 \\ Q_2^1 \\ Q_3^1+Q_1^2 \\ Q_4^1+Q_2^2 \\ Q_3^2 \\ Q_4^2 \end{Bmatrix} \tag{1}$$

(b) The specified generalized displacements and forces are

$$U_1 = U_2 = U_5 = U_6 = 0; \quad Q_3^1 + Q_1^2 = 0, \quad Q_4^1 + Q_2^2 = 0 \tag{2}$$

(c) The condensed equations for the generalized displacements are

$$\left(\frac{GAK_s}{4h}\right)\begin{bmatrix} 8 & 0 \\ 0 & 2(h^2+\alpha) \end{bmatrix}\begin{Bmatrix} U_3 \\ U_4 \end{Bmatrix} = \frac{q_0 h}{12}\begin{Bmatrix} 6 \\ h \end{Bmatrix}, \quad \alpha = \frac{4EI}{GAK_s} \tag{3}$$

Solving Eqn. (3), we obtain, using the data $\nu = 0.25$, $A = 12I/H^2$, $K_s = 5/6$ and $\alpha = H^2$

$$U_3 = \frac{q_0 h^2}{4GAK_s}, \quad U_4 = \frac{q_0 h^3}{6(GAK_s h^2 + 4EI)} = \frac{q_0 h^3}{24EI}\left[1 + \left(\frac{h}{H}\right)^2\right]^{-1} \tag{4}$$

The condensed equations for the generalized forces (i.e., reactions at the clamped ends) are given by

$$\begin{aligned} Q_1^1 &= -\frac{q_0 h}{2} - (4U_3 + 2hU_4)\frac{GAK_s}{4h} = -\frac{3q_0 h}{4} - \frac{q_0 h}{12(1+\alpha/h^2)} \\ Q_2^1 &= \frac{q_0 h^2}{12} + [2hU_3 + (h^2-\alpha)U_4]\frac{GAK_s}{4h} = \frac{5q_0 h^2}{24} + \frac{1-\alpha/h^2}{1+\alpha/h^2}\frac{q_0 h^2}{24} \\ Q_3^2 &= (-4U_3 + 2hU_4)\frac{GAK_s}{4h} = -\frac{q_0 h}{4} + \frac{1}{1+\alpha/h^2}\frac{q_0 h}{12} \\ Q_4^2 &= [-2hU_3 + (h^2-\alpha)U_4]\frac{GAK_s}{4h} = -\frac{q_0 h^2}{8} + \frac{1-\alpha/h^2}{1+\alpha/h^2}\frac{q_0 h^2}{6} \end{aligned} \tag{5}$$

PROPRIETARY MATERIAL. ©The McGraw-Hill Companies, Inc. All rights reserved.

Problem 5.23: Analyze Problem 5.8 using the consistent interpolation (cubic w and quadratic Ψ) Timoshenko beam element (CIE-2). Use a value of $\frac{5}{6}$ for the shear correction factor and $\nu = 0.25$.

Solution: The element matrix for the IIE (CIE-2) element is given by

$$\left(\frac{2E_eI_e}{\mu_e h_e^3}\right)\begin{bmatrix} 6 & -3h_e & -6 & -3h_e \\ -3h_e & 2h_e^2\Sigma_e & 3h_e & h_e^2\Theta_e \\ -6 & 3h_e & 6 & 3h_e \\ -3h_e & h_e^2\Theta_e & 3h_e & 2h_e^2\Sigma_e \end{bmatrix}\begin{Bmatrix} w_1^e \\ S_1^e \\ w_2^e \\ S_2^e \end{Bmatrix} = \begin{Bmatrix} q_1^e \\ q_2^e \\ q_3^e \\ q_4^e \end{Bmatrix} + \begin{Bmatrix} Q_1^e \\ Q_2^e \\ Q_3^e \\ Q_4^e \end{Bmatrix}$$

where

$$\Lambda_e = \frac{E_eI_e}{G_eA_eK_sh_e^2}\ , \quad \mu_e = 1 + 12\Lambda_e, \quad \Theta_e = 1 - 6\Lambda_e, \quad \Sigma_e = 1 + 3\Lambda_e$$

(a) The assembled equations are given by

$$\left(\frac{2EI}{\mu h^3}\right)\begin{bmatrix} 6 & -3h & -6 & -3h & 0 & 0 \\ -3h & 2h^2\Sigma & 3h & h^2\Theta & 0 & 0 \\ -6 & 3h & 12 & 0 & -6 & -3h \\ -3h & h^2\Theta & 0 & 4h^2\Sigma & 3h & h^2\Theta \\ 0 & 0 & -6 & 3h & 6 & 3h \\ 0 & 0 & -3h & h^2\Theta & 3h & 2h^2\Sigma \end{bmatrix}\begin{Bmatrix} U_1 \\ U_2 \\ U_3 \\ U_4 \\ U_5 \\ U_6 \end{Bmatrix}$$

$$= \frac{q_0h}{12}\begin{Bmatrix} 6 \\ -h \\ 6 \\ h \\ 0 \\ 0 \end{Bmatrix} + \begin{Bmatrix} Q_1^1 \\ Q_2^1 \\ Q_3^1 + Q_1^2 \\ Q_4^1 + Q_2^2 \\ Q_3^2 \\ Q_4^2 \end{Bmatrix} \tag{1}$$

(b) The specified generalized displacements and forces are

$$U_1 = U_2 = U_5 = U_6 = 0; \quad Q_3^1 + Q_1^2 = 0, \quad Q_4^1 + Q_2^2 = 0 \tag{2}$$

(c) The condensed equations for the generalized displacements are

$$\left(\frac{2EI}{\mu h^3}\right)\begin{bmatrix} 12 & 0 \\ 0 & 4h^2\Sigma \end{bmatrix}\begin{Bmatrix} U_3 \\ U_4 \end{Bmatrix} = \frac{q_0h}{12}\begin{Bmatrix} 6 \\ h \end{Bmatrix} \tag{3}$$

The generalized displacements are given by

$$U_3 = \frac{\mu q_0h^4}{48EI} = (1+3s^2)\frac{q_0h^4}{48EI}, \quad U_4 = \frac{\mu q_0h^3}{96EI\Sigma} = \left(\frac{1+3s^2}{1+0.75s^2}\right)\frac{q_0h^4}{96EI} \tag{4}$$

PROPRIETARY MATERIAL. ©The McGraw-Hill Companies, Inc. All rights reserved.

where $s = H/h$ is the element height-to-length ratio. The condensed equations for the generalized forces (i.e., reactions at the clamped ends) are given by

$$
\begin{aligned}
Q_1^1 &= -\frac{q_0 h}{2} - (6U_3 + 3hU_4)\frac{2EI}{\mu h^3} = -\frac{3q_0 h}{4} - \left(\frac{1}{1+0.75s^2}\right)\frac{q_0 h}{16} \\
Q_2^1 &= \frac{q_0 h^2}{12} + [3hU_3 + h^2\Theta U_4]\frac{2EI}{\mu h^3} = \frac{5q_0 h^2}{24} + \left(\frac{1-1.5s^2}{1+0.75s^2}\right)\frac{q_0 h^2}{48} \\
Q_3^2 &= (-6U_3 + 3hU_4)\frac{2EI}{\mu h^3} = -\frac{q_0 h}{4} + \left(\frac{1}{1+0.75s^2}\right)\frac{q_0 h}{16} \\
Q_4^2 &= (-3hU_3 + h^2\Theta U_4)\frac{2EI}{\mu h^3} == -\frac{q_0 h^2}{8} + \left(\frac{1-1.5s^2}{1+0.75s^2}\right)\frac{q_0 h^2}{48}
\end{aligned} \tag{5}
$$

Compare these values against those of the Euler–Bernoulli beam solutions from Problem 5.8:

$$
\begin{aligned}
U_3 &= \frac{q_0 h^4}{48EI}, \qquad U_4 = \frac{q_0 h^3}{96EI} \\
Q_1^1 &= -\frac{13}{16}q_0 h, \quad Q_2^1 = \frac{11}{48}f_0 h^2 \\
Q_3^2 &= -\frac{3}{16}q_0 h, \quad Q_4^2 = -\frac{5q_0 h^2}{48}
\end{aligned} \tag{6}
$$

Clearly, the Euler–Bernoulli beam solution is obtained by setting $s = 0$ in Eqs. (4) and (5).

Problem 5.24: Analyze the problem in Figure P5.24 using the consistent interpolation (quadratic w and linear Ψ) Timoshenko beam element (CIE-1). Use a value of $\frac{5}{6}$ for the shear correction factor and $\nu = 0.25$.

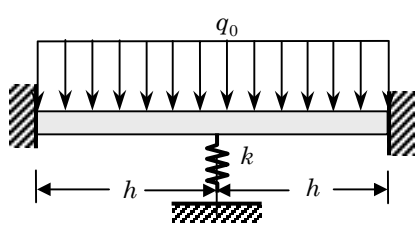

Figure P5.24

Solution: (a) The assembled equations are given by

$$
\left(\frac{GAK_s}{4h}\right)\begin{bmatrix}
4 & -2h & -4 & -2h & 0 & 0 \\
-2h & h^2+\alpha & 2h & h^2-\alpha & 0 & 0 \\
-4 & 2h & 4+4 & 2h-2h & -4 & -2h \\
-2h & h^2-\alpha & 2h-2h & 2(h^2+\alpha) & 2h & h^2-\alpha \\
0 & 0 & -4 & 2h & 4 & 2h \\
0 & 0 & -2h & h^2-\alpha & 2h & h^2+\alpha
\end{bmatrix}\begin{Bmatrix} U_1 \\ U_2 \\ U_3 \\ U_4 \\ U_5 \\ U_6 \end{Bmatrix}
$$

PROPRIETARY MATERIAL. ©The McGraw-Hill Companies, Inc. All rights reserved.

$$= \frac{q_0 h}{12}\left\{\begin{array}{c} 6 \\ -h \\ 6+6 \\ h-h \\ 6 \\ h \end{array}\right\} + \left\{\begin{array}{c} Q_1^1 \\ Q_2^1 \\ Q_3^1+Q_1^2 \\ Q_4^1+Q_2^2 \\ Q_3^2 \\ Q_4^2 \end{array}\right\} \tag{1}$$

(b) The specified generalized displacements and forces are

$$U_1 = U_2 = U_5 = U_6 = 0; \quad Q_3^1 + Q_1^2 = -kU_3, \quad Q_4^1 + Q_2^2 = 0 \tag{2}$$

(c) The condensed equations for the generalized displacements are

$$\left[\begin{array}{cc} \frac{2GAK_s}{h}+k & 0 \\ 0 & (h^2+\alpha)\frac{GAK_s}{2h} \end{array}\right]\left\{\begin{array}{c} U_3 \\ U_4 \end{array}\right\} = q_0 h\left\{\begin{array}{c} 1 \\ 0 \end{array}\right\}, \quad \alpha = \frac{4EI}{GAK_s} \tag{3}$$

Solving Eqn. (3), we obtain

$$U_3 = \frac{q_0 h^2}{2GAK_s + kh}, \quad U_4 = 0 \tag{4}$$

The condensed equations for the generalized forces (i.e., reactions at the clamped ends) are given by

$$\begin{aligned} Q_1^1 &= -\frac{q_0 h}{2} - \frac{GAK_s}{h}U_3 = -\frac{q_0 h}{2} - \frac{q_0 h}{2(1+0.5s_k)} \\ Q_2^1 &= \frac{q_0 h^2}{12} + \frac{GAK_s}{2}U_3 = \frac{q_0 h^2}{12} + \frac{q_0 h^2}{4(1+0.5s_k)} \\ Q_3^2 &= -\frac{q_0 h}{2} - \frac{GAK_s}{h}U_3 = -\frac{q_0 h}{2} - \frac{q_0 h}{2(1+0.5s_k)} \\ Q_4^2 &= -\frac{q_0 h^2}{12} - \frac{GAK_s}{2}U_3 = -\frac{q_0 h^2}{12} - \frac{q_0 h^2}{4(1+0.5s_k)} \end{aligned} \tag{5}$$

where $s_k = kh/GAK_s$.

Problem 5.25: Analyze the problem in Figure P5.24 using the consistent interpolation (cubic w and quadratic Ψ) Timoshenko beam element (CIE-2). Use a value of $\frac{5}{6}$ for the shear correction factor and $\nu = 0.25$.

Solution: (a) The assembled equations are given by

$$\left(\frac{2EI}{\mu h^3}\right)\left[\begin{array}{cccccc} 6 & -3h & -6 & -3h & 0 & 0 \\ -3h & 2h^2\Sigma & 3h & h^2\Theta & 0 & 0 \\ -6 & 3h & 12 & 0 & -6 & -3h \\ -3h & h^2\Theta & 0 & 4h^2\Sigma & 3h & h^2\Theta \\ 0 & 0 & -6 & 3h & 6 & 3h \\ 0 & 0 & -3h & h^2\Theta & 3h & 2h^2\Sigma \end{array}\right]\left\{\begin{array}{c} U_1 \\ U_2 \\ U_3 \\ U_4 \\ U_5 \\ U_6 \end{array}\right\}$$

PROPRIETARY MATERIAL. ©The McGraw-Hill Companies, Inc. All rights reserved.

$$= \frac{q_0 h}{12} \begin{Bmatrix} 6 \\ -h \\ 6+6 \\ h-h \\ 6 \\ h \end{Bmatrix} + \begin{Bmatrix} Q_1^1 \\ Q_2^1 \\ Q_3^1 + Q_1^2 \\ Q_4^1 + Q_2^2 \\ Q_3^2 \\ Q_4^2 \end{Bmatrix} \tag{1}$$

where

$$\Lambda_e = \frac{E_e I_e}{G_e A_e K_s h_e^2}\ , \quad \mu_e = 1 + 12\Lambda_e, \quad \Theta_e = 1 - 6\Lambda_e, \quad \Sigma_e = 1 + 3\Lambda_e$$

(b) The specified generalized displacements and forces are

$$U_1 = U_2 = U_5 = U_6 = 0; \quad Q_3^1 + Q_1^2 = -kU_3, \quad Q_4^1 + Q_2^2 = 0 \tag{2}$$

(c) The condensed equations for the generalized displacements are

$$\begin{bmatrix} \frac{24EI}{\mu h^3} + k & 0 \\ 0 & \frac{8EI\Sigma}{\mu h} \end{bmatrix} \begin{Bmatrix} U_3 \\ U_4 \end{Bmatrix} = q_0 h \begin{Bmatrix} 1 \\ 0 \end{Bmatrix} \tag{3}$$

The generalized displacements are given by

$$U_3 = \frac{\mu q_0 h^4}{24EI + \mu k h^3} = \frac{q_0 h^4}{24EI}\left(\frac{\mu}{1 + \mu s_k/6}\right), \quad U_4 = 0 \tag{4}$$

where $s_k = kh^3/4EI$. The condensed equations for the generalized forces (i.e., reactions at the clamped ends) are given by

$$\begin{aligned}
Q_1^1 &= -\frac{q_0 h}{2} - \frac{12EI}{\mu h^3} U_3 = -\frac{q_0 h}{2} - \frac{q_0 h}{2}\left(\frac{1}{1 + \mu s_k/6}\right) \\
Q_2^1 &= \frac{q_0 h^2}{12} + \frac{6EI}{\mu h^2} U_3 = \frac{q_0 h^2}{12} + + \frac{q_0 h^2}{4}\left(\frac{1}{1 + \mu s_k/6}\right) \\
Q_3^2 &= -\frac{q_0 h}{2} - \frac{12EI}{\mu h^3} U_3 = -\frac{q_0 h}{2} - \frac{q_0 h}{2}\left(\frac{1}{1 + \mu s_k/6}\right) \\
Q_4^2 &= -\frac{q_0 h^2}{12} - \frac{6EI}{\mu h^2} U_3 == -\frac{q_0 h^2}{12} - + \frac{q_0 h^2}{4}\left(\frac{1}{1 + \mu s_k/6}\right)
\end{aligned} \tag{5}$$

Problem 5.26: Consider a thin isotropic circular plate of radius R_0 and suppose that the plate is clamped at $r = R_0$. If two finite elements (see Problem 5.2) are used in the domain ($0 \le r \le R_0$), give the boundary conditions on the primary and secondary variables of the mesh if the plate is subjected to (a) a uniformly distributed transverse load of intensity q_0, and (b) point load Q_0 at the center.

PROPRIETARY MATERIAL. ©The McGraw-Hill Companies, Inc. All rights reserved.

Solution: The geometric boundary conditions of the problem require vanishing of the slope dw/dr at $r = 0$ and $r = R_0$, and deflection w at $r = R_0$ irrespective of the load. Thus, we have

$$\begin{aligned}
&\text{(a)} \quad U_2 = U_5 = U_6 = 0; \quad Q_1^1 = 0, \quad Q_3^1 + Q_1^2 = 0, \quad Q_4^1 + Q_2^2 = 0 \\
&\text{(b)} \quad U_2 = U_5 = U_6 = 0; \quad Q_1^1 = Q_0, \quad Q_3^1 + Q_1^2 = 0, \quad Q_4^1 + Q_2^2 = 0
\end{aligned}$$

Problem 5.27: Repeat the circular plate problem of Problem 5.26 when a two-element mesh of Timoshenko elements is used.

Solution: The geometric boundary conditions of the problem require vanishing of the rotation Ψ at $r = 0$ and $r = R_0$, and deflection w at $r = R_0$ irrespective of the load. Thus, we have

$$\begin{aligned}
&\text{(a)} \quad U_2 = U_5 = U_6 = 0; \quad Q_1^1 = 0, \quad Q_3^1 + Q_1^2 = 0, \quad Q_4^1 + Q_2^2 = 0 \\
&\text{(b)} \quad U_2 = U_5 = U_6 = 0; \quad Q_1^1 = Q_0, \quad Q_3^1 + Q_1^2 = 0, \quad Q_4^1 + Q_2^2 = 0
\end{aligned}$$

Problems 5.28–5.35: For frame problems shown in Figs. P5.28–P5.35, give (a) the transformed element matrices; (b) the assembled element matrices; (c) the condensed matrix equations for the unknown generalized displacements and forces.

Solution to Problem 5.28: This is the same structure that was analyzed in Problem 5.6 using superposition. Here we wish to solve it as a frame problem. First note that $\theta_1 = -90°$ and $\theta_2 = 0°$. The element stiffness matrices are

$$[K^1] = 10^8 \begin{bmatrix} 0.0002 & 0.0000 & -0.0125 & -0.0002 & 0.0000 & -0.0125 \\ 0.0000 & 0.2500 & 0.0000 & 0.0000 & -0.2500 & 0.0000 \\ -0.0125 & 0.0000 & 1.0000 & 0.0125 & 0.0000 & 0.5000 \\ -0.0002 & 0.0000 & 0.0125 & 0.0002 & 0.0000 & 0.0125 \\ 0.0000 & -0.2500 & 0.0000 & 0.0000 & 0.2500 & 0.0000 \\ -0.0125 & 0.0000 & 0.5000 & 0.0125 & 0.0000 & 1.0000 \end{bmatrix}$$

$$[K^2] = 10^8 \begin{bmatrix} 0.3125 & 0.0000 & 0.0000 & -0.3125 & 0.0000 & 0.0000 \\ 0.0000 & 0.0004 & -0.0195 & 0.0000 & -0.0004 & -0.0195 \\ 0.0000 & -0.0195 & 1.2500 & 0.0000 & 0.0195 & 0.6250 \\ -0.3125 & 0.0000 & 0.0000 & 0.3125 & 0.0000 & 0.0000 \\ 0.0000 & -0.0004 & 0.0195 & 0.0000 & 0.0004 & 0.0195 \\ 0.0000 & -0.0195 & 0.6250 & 0.0000 & 0.0195 & 1.2500 \end{bmatrix}$$

PROPRIETARY MATERIAL. ©The McGraw-Hill Companies, Inc. All rights reserved.

The assembled stiffness matrix is

$$[K] = 10^8 \begin{bmatrix} 0.0002 & 0.0000 & -0.0125 & -0.0002 & 0.0000 & -0.0125 & 0.0000 & 0.0000 & 0.0000 \\ 0.0000 & 0.2500 & 0.0000 & 0.0000 & -0.2500 & 0.0000 & 0.0000 & 0.0000 & 0.0000 \\ -0.0125 & 0.0000 & 1.0000 & 0.0125 & 0.0000 & 0.5000 & 0.0000 & 0.0000 & 0.0000 \\ -0.0002 & 0.0000 & 0.0125 & 0.3127 & 0.0000 & 0.0125 & -0.3125 & 0.0000 & 0.0000 \\ 0.0000 & -0.2500 & 0.0000 & 0.0000 & 0.2504 & -0.0195 & 0.0000 & -0.0004 & -0.0195 \\ 0.0125 & 0.0000 & 0.5000 & 0.0125 & -0.0195 & 2.2500 & 0.0000 & 0.0195 & 0.6250 \\ 0.0000 & 0.0000 & 0.0000 & -0.3125 & 0.0000 & 0.0000 & 0.3125 & 0.0000 & 0.0000 \\ 0.0000 & 0.0000 & 0.0000 & 0.0000 & -0.0004 & 0.0195 & 0.0000 & 0.0004 & 0.0195 \\ 0.0000 & 0.0000 & 0.0000 & 0.0000 & -0.0195 & 0.6250 & 0.0000 & 0.0195 & 1.2500 \end{bmatrix}$$

The boundary conditions are

$$U_1 = U_2 = U_3 = 0$$

$$Q_4^1 + Q_1^2 = 0, \quad Q_5^1 + Q_2^2 = 0, \quad Q_6^1 + Q_3^2 = 0, \quad Q_4^2 = 0, \quad Q_5^2 = P, \quad Q_6^2 = 0$$

The condensed equations are obtained by deleting the first three rows and columns. The solution is given by (using program FEM1D)

$$U_4(= u_x^B) = 0.2304, \quad U_5(= u_z^B) = 4 \times 10^{-4}, \quad U_6(= \theta_y^B) = -0.00384$$

$$U_7(= u_x^C) = 0.2304, \quad U_8(= u_z^C) = 0.46698, \quad U_9(= \theta_y^C) = -0.005376$$

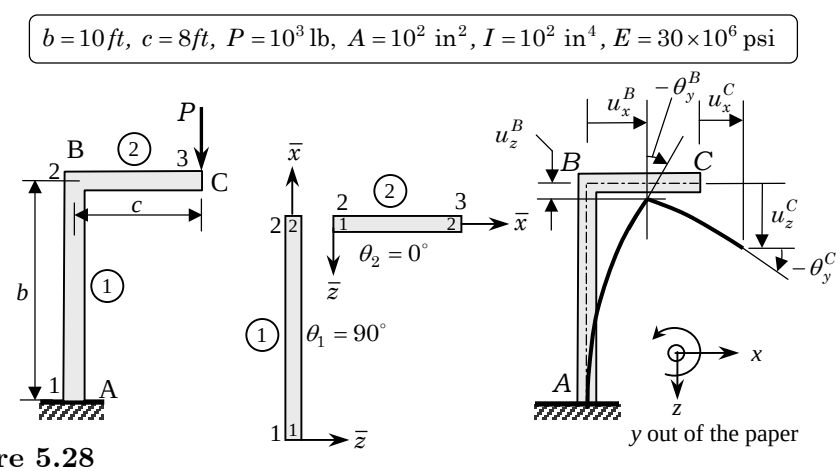

Figure 5.28

PROPRIETARY MATERIAL. ©The McGraw-Hill Companies, Inc. All rights reserved.

Solution to Problem 5.29: For this frame problem, member 1 has the axial stiffness of EA and bending stiffness $2EI$ and member 2 has EA and EI, where the values of EA and EI are the same for both members. The point loads may be distributed to the element nodes by the formula (5.2.20), $\bar{f}_i^e = F_0\phi_i^e(x_0)$, where F_0 is the intensity of the point load and x_0 is the distance along the member, measured from node 1 to the point of load application.

The boundary conditions are:

$$U_1 = U_2 = U_3 = U_7 = U_8 = U_9 = 0$$

The condensed equations are

$$10^8 \begin{bmatrix} 2.5042 & 0.0000 & 0.0250 \\ 0.0000 & 0.2502 & -0.0125 \\ 0.0250 & -0.0125 & 3.0000 \end{bmatrix} \begin{Bmatrix} U_4 \\ U_5 \\ U_6 \end{Bmatrix} = 10^4 \begin{Bmatrix} 0.784 \\ 0.400 \\ 5.640 \end{Bmatrix}$$

The displacements ($U_i = \bar{U}_i \times 10^{-4}$) are (in inches or radians):

$$\bar{U}_4 = 2.9448, \quad \bar{U}_5 = 1.6917, \quad \bar{U}_6 = 1.8625$$

The reactions (in lbs or lb-in) in member coordinates are:

$$\bar{Q}_1^1 = 4,229, \quad \bar{Q}_2^1 = -2,638, \quad \bar{Q}_3^1 = 94,960, \quad \bar{Q}_4^1 = -4,229$$
$$\bar{Q}_5^1 = -7,362, \quad \bar{Q}_6^1 = -138,400, \quad \bar{Q}_1^2 = 7,362, \quad \bar{Q}_2^2 = -4,229$$
$$\bar{Q}_3^2 = 138,400, \quad \bar{Q}_4^2 = -7,362, \quad \bar{Q}_5^2 = -3,771, \quad \bar{Q}_6^2 = -110,900$$

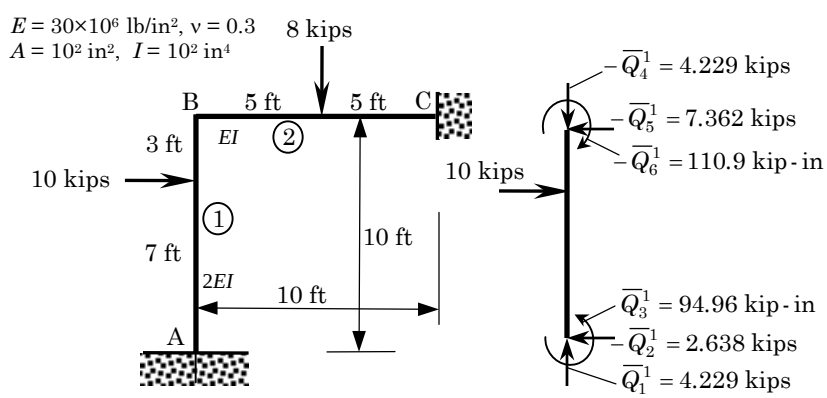

Figure 5.29

PROPRIETARY MATERIAL. ©The McGraw-Hill Companies, Inc. All rights reserved.

Solution to Problem 5.30: First note that $\theta_1 = -45°$ and $\theta_2 = 0°$.

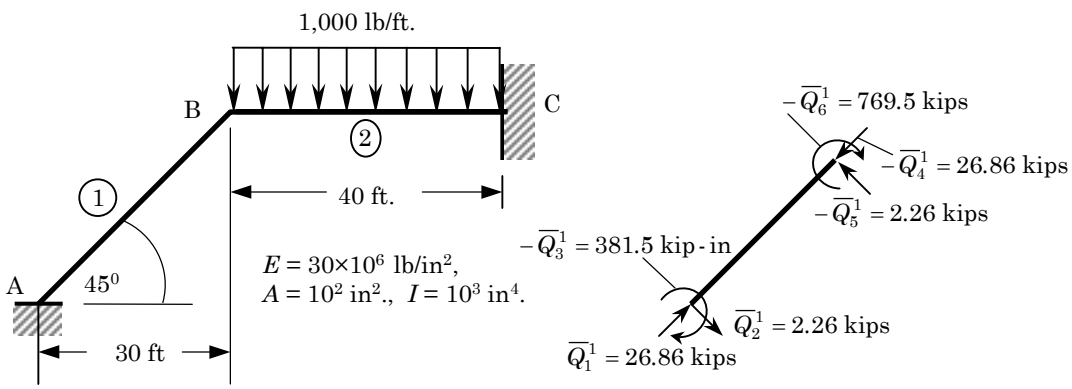

Figure 5.30

The boundary conditions are:

$$U_1 = U_2 = U_3 = U_7 = U_8 = U_9 = 0$$

The condensed equations are

$$10^8 \begin{bmatrix} 0.09198 & -0.02945 & 0.00491 \\ -0.02945 & 0.02951 & -0.00290 \\ 0.00491 & -0.00290 & 4.85700 \end{bmatrix} \begin{Bmatrix} U_4 \\ U_5 \\ U_6 \end{Bmatrix} = 10^3 \begin{Bmatrix} 0 \\ 20 \\ -1,600 \end{Bmatrix}$$

The displacements are (in inches or radians):

$$U_4 = 0.003295, \quad U_5 = 0.009742, \quad U_6 = -0.003292$$

The reactions (in kips or kip-in) in member coordinates are:

$$\bar{Q}_1^1 = 26.86, \quad \bar{Q}_2^1 = 2.26, \quad \bar{Q}_3^1 = -381.5, \quad \bar{Q}_4^1 = -26.86$$
$$\bar{Q}_5^1 = -2.26, \quad \bar{Q}_6^1 = -769.5, \quad \bar{Q}_1^2 = 20.59, \quad \bar{Q}_2^2 = -17.4$$
$$\bar{Q}_3^2 = 769.5, \quad \bar{Q}_4^2 = -20.59, \quad \bar{Q}_5^2 = -22.60, \quad \bar{Q}_6^2 = -2,019$$

Solution to Problem 5.31: This frame is the same as that in Problem 5.29, except that end A is hinged. The boundary conditions are:

$$U_1 = U_2 = U_7 = U_8 = U_9 = 0$$

PROPRIETARY MATERIAL. ©The McGraw-Hill Companies, Inc. All rights reserved.

The displacements ($U_i = \bar{U}_i \times 10^{-3}$) are (in inches or radians):

$$\bar{U}_3 = -0.5702, \quad \bar{U}_4 = 0.3325, \quad \bar{U}_5 = 0.1786, \quad \bar{U}_6 = 0.3760$$

The reactions (in kips or kip-in) in member coordinates are:

$$\bar{Q}_1^1 = 4.466, \quad \bar{Q}_2^1 = -1.689, \quad \bar{Q}_3^1 = 0, \quad \bar{Q}_4^1 = -4.466$$
$$\bar{Q}_5^1 = -8.311, \quad \bar{Q}_6^1 = -157.4, \quad \bar{Q}_1^2 = 8.311, \quad \bar{Q}_2^2 = -4.466$$
$$\bar{Q}_3^2 = 157.4, \quad \bar{Q}_4^2 = -8.311, \quad \bar{Q}_5^2 = -3.534, \quad \bar{Q}_6^2 = -101.4$$

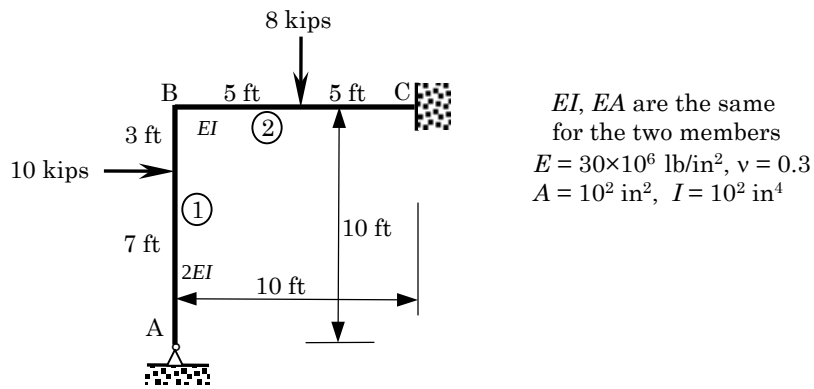

Figure P5.31

Solution to Problem 5.32: This structure has three members with orientations $\theta_1 = -90°$, $\theta_2 = 0°$ and $\theta_3 = 90°$. The boundary conditions are

$$U_{10} = U_{11} = U_{12} = 0$$

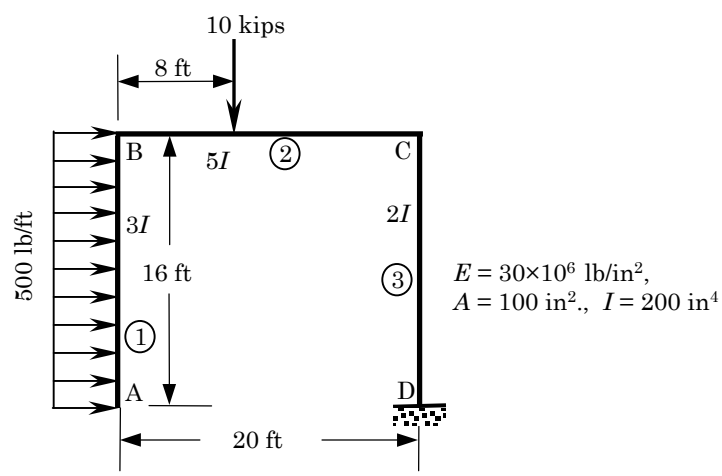

Figure P5.32

PROPRIETARY MATERIAL. ©The McGraw-Hill Companies, Inc. All rights reserved.

For the choice of the data, the generalized displacements of the nodes of the cantilevered frame are (solved using FEM1D)

$$U_1 = 4.8421, \quad U_2 = 6.9311, \quad U_3 = 0.0354, \quad U_4 = -1.8180$$

$$U_5 = 6.9311, \quad U_6 = 3.2640, \quad U_7 = -1.8186, \quad U_8 = 0.00064, \quad U_9 = 0.0230$$

The reactions at the fixed end are (in the global coordinates)

$$F_{10} = \bar{Q}_5^3 = 8,000 \text{ lb}, \quad F_{11} = \bar{Q}_4^3 = -10,000 \text{ lb}, \quad F_{12} = \bar{Q}_6^3 = -672,000 \text{ lb-in}$$

Solution to Problem 5.33: This is the same frame structure as in Problem 5.32, except that end A is now on a roller support. Thus, the boundary conditions are

$$U_2 = U_{10} = U_{11} = U_{12} = 0$$

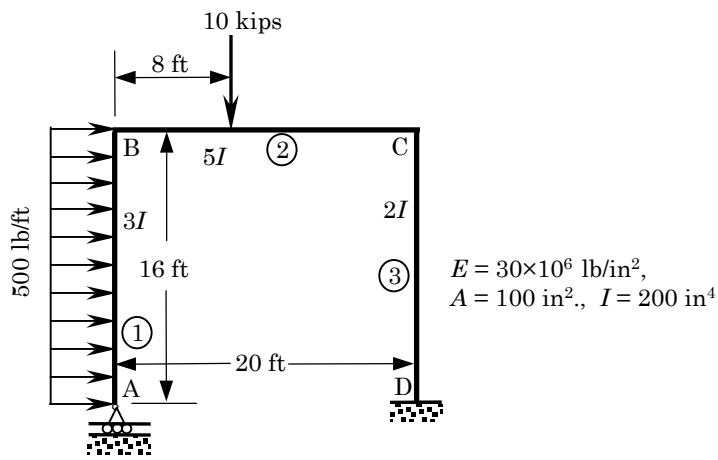

Figure P5.33

The generalized displacements of the nodes of the frame are (solved using FEM1D)

$$U_1 = 1.2780, \quad U_3 = 0.0044, \quad U_4 = 0.5581, \quad U_5 = 0.0004$$

$$U_6 = 0.0017, \quad U_7 = 0.5575, \quad U_8 = 0.0002, \quad U_9 = -0.0017$$

The reactions at the fixed end are (in the global coordinates)

$$F_{10} = \bar{Q}_5^3 = 8,000 \text{ lb}, \quad F_{11} = \bar{Q}_4^3 = -3,554 \text{ lb}, \quad F_{12} = \bar{Q}_6^3 = 874,900 \text{ lb-in}$$

Solution to Problem 5.34: The displacement boundary conditions are

$$U_1 = U_2 = U_3 = U_{10} = U_{11} = U_{12} = 0$$

PROPRIETARY MATERIAL. ©The McGraw-Hill Companies, Inc. All rights reserved.

and the non-zero force boundary conditions are

$$Q_4^1 + Q_1^2 = 10,000, \quad Q_6^2 + Q_3^3 = 5,000$$

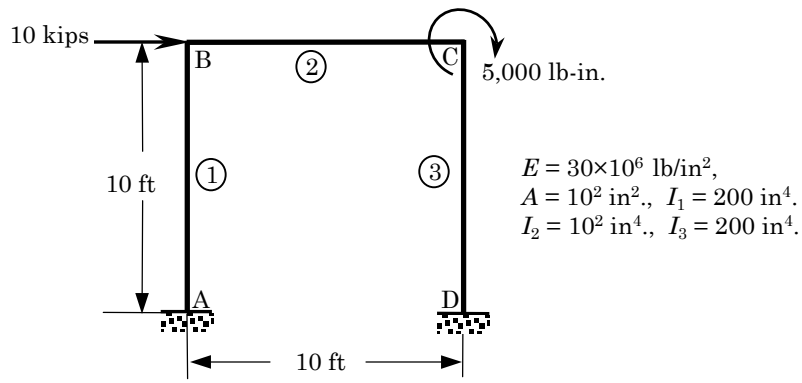

Figure P5.34

The generalized displacements of the nodes of the frame are (solved using FEM1D)

$$U_4 = 2114, \quad U_5 = 0.0015, \quad U_6 = -0.0015$$

$$U_7 = 0.2094, \quad U_8 = 0.0015, \quad U_9 = -0.0015$$

The reactions at the fixed ends are (in the global coordinates)

$$F_1 = \bar{Q}_2^1 = -4,992 \text{ lb}, \quad F_2 = \bar{Q}_1^1 = -3,703 \text{ lb}, \quad F_3 = \bar{Q}_3^1 = 375,800 \text{ lb-in}$$
$$F_{10} = \bar{Q}_5^3 = 5,008 \text{ lb}, \quad F_{11} = \bar{Q}_4^3 = -3,703 \text{ lb}, \quad F_{12} = \bar{Q}_6^3 = 374,800 \text{ lb-in}$$

Solution to Problem 5.35: This is the same frame structure as in Problem 5.33, except for the uniformly distributed load on member 2. The displacement and force boundary conditions remain the same before.

The generalized displacements of the nodes of the frame are (solved using FEM1D)

$$U_4 = 0.21375, \quad U_5 = 0.02252, \quad U_6 = -0.00635$$

$$U_7 = 0.20697, \quad U_8 = 0.02548, \quad U_9 = 0.00334$$

The reactions at the fixed ends are (in the global coordinates)

$$F_1 = \bar{Q}_2^1 = 6,968 \text{ lb}, \quad F_2 = \bar{Q}_1^1 = 56,300 \text{ lb}, \quad F_3 = \bar{Q}_3^1 = -100,600 \text{ lb-in}$$
$$F_{10} = \bar{Q}_5^3 = 16,970 \text{ lb}, \quad F_{11} = \bar{Q}_4^3 = -63,700 \text{ lb}, \quad F_{12} = \bar{Q}_6^3 = 851,200 \text{ lb-in}$$

PROPRIETARY MATERIAL. ©The McGraw-Hill Companies, Inc. All rights reserved.

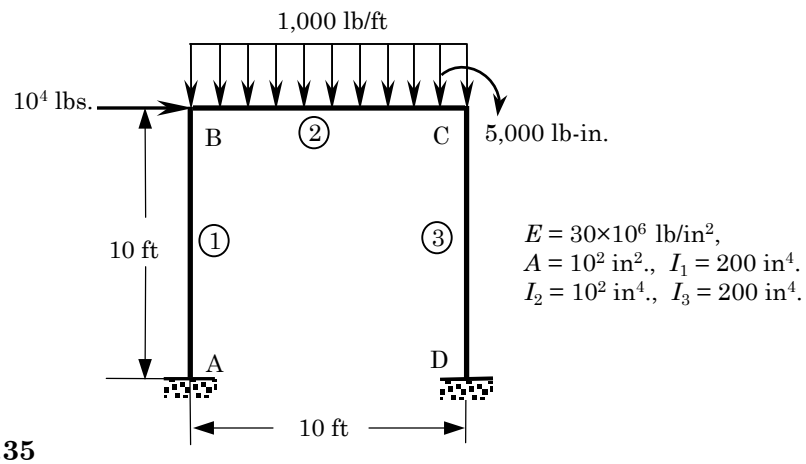

Figure P5.35

PROPRIETARY AND CONFIDENTIAL

This Manual is the proprietary property of The McGraw-Hill Companies, Inc. ("McGraw-Hill") and protected by copyright and other state and federal laws. By opening and using this Manual the user agrees to the following restrictions, and if the recipient does not agree to these restrictions, the Manual should be promptly returned unopened to McGraw-Hill: **This Manual is being provided only to authorized professors and instructors for use in preparing for the classes using the affiliated textbook. No other use or distribution of this Manual is permitted. This Manual may not be sold and may not be distributed to or used by any student or other third party. No part of this Manual may be reproduced, displayed or distributed in any form or by any means, electronic or otherwise, without the prior written permission of the McGraw-Hill.**

PROPRIETARY MATERIAL. © The McGraw-Hill Companies, Inc. All rights reserved.

Chapter 6

EIGENVALUE AND TIME-DEPENDENT PROBLEMS

Problem 6.1: Determine the first two eigenvalues associated with the heat transfer problem, whose governing equations and boundary conditions are given by

$$-\frac{\partial}{\partial x}\left(a\frac{\partial u}{\partial x}\right) + b\frac{\partial u}{\partial t} + cu = 0 \quad \text{for } 0 < x < L$$

$$u(0) = 0, \quad \left(a\frac{\partial u}{\partial x} + \beta u\right)\bigg|_{x=L} = 0$$

where a, b, c, and β are constants. Use (a) two linear finite elements, and (b) one quadratic element in the domain to solve the problem.

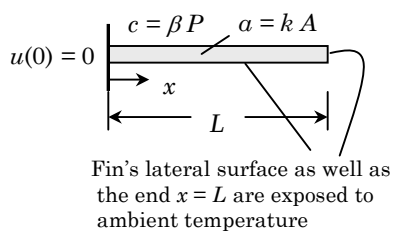

Figure P6.1

Solution: Note that the problem at hand is a parabolic equation. Hence, the solution is taken to be $u(x,t) = U(x)\exp(\lambda t)$; where, λ is the eigenvalue.

(a) For the mesh of two linear elements, the assembled equations of the eigenvalue problem are (see Section 6.1.4):

$$\left(\frac{a}{h}\begin{bmatrix} 1 & -1 & 0 \\ -1 & 2 & -1 \\ 0 & -1 & 1 \end{bmatrix} + \frac{ch}{6}\begin{bmatrix} 2 & 1 & 0 \\ 1 & 4 & 1 \\ 0 & 1 & 2 \end{bmatrix} - \lambda\frac{bh}{6}\begin{bmatrix} 2 & 1 & 0 \\ 1 & 4 & 1 \\ 0 & 1 & 2 \end{bmatrix}\right)\begin{Bmatrix} U_1 \\ U_2 \\ U_3 \end{Bmatrix}$$

$$= \begin{Bmatrix} Q_1^1 \\ Q_2^1 + Q_1^2 \\ Q_2^2 \end{Bmatrix}$$

PROPRIETARY MATERIAL. ©The McGraw-Hill Companies, Inc. All rights reserved.

where $h = L/2$. The boundary conditions are: $U_1 = 0$, $Q_2^1 + Q_1^2 = 0$, and $Q_2^2 = -\beta U_3$. It is clear that the term βU_3, when taken to the left side, should add to the second diagonal term of the stiffness matrix (because βU_3 does not contain λ in order to add it to the mass matrix). The condensed equations are given by

$$\left(\begin{bmatrix} \frac{2a}{h} & -\frac{a}{h} \\ -\frac{a}{h} & \frac{a}{h} + \beta \end{bmatrix} + \begin{bmatrix} \frac{4ch}{6} & \frac{ch}{6} \\ \frac{ch}{6} & \frac{2ch}{6} \end{bmatrix} - \lambda \begin{bmatrix} \frac{4bh}{6} & \frac{bh}{6} \\ \frac{bh}{6} & \frac{2bh}{6} \end{bmatrix} \right) \begin{Bmatrix} U_2 \\ U_3 \end{Bmatrix} = \begin{Bmatrix} 0 \\ 0 \end{Bmatrix}$$

Setting the determinant of the coefficient matrix to zero, we obtain the characteristic polyniomial in λ.

(b) For the mesh of one quadratic element, the equations of the eigenvalue problem are:

$$\left(\frac{a}{3h} \begin{bmatrix} 7 & -8 & 1 \\ -8 & 16 & -8 \\ 1 & -8 & 7 \end{bmatrix} + \frac{ch}{30} \begin{bmatrix} 4 & 2 & -1 \\ 2 & 16 & 2 \\ -1 & 2 & 4 \end{bmatrix} \right) - \lambda \frac{bh}{30} \begin{bmatrix} 4 & 2 & -1 \\ 2 & 16 & 2 \\ -1 & 2 & 4 \end{bmatrix} \Bigg) \begin{Bmatrix} U_1 \\ U_2 \\ U_3 \end{Bmatrix}$$

$$= \begin{Bmatrix} Q_1^1 \\ Q_2^1 \\ Q_3^1 \end{Bmatrix}$$

where $h = L$. The boundary conditions are: $U_1 = 0$, $Q_2^1 = 0$, and $Q_3^1 = -kU_3$. The condensed equations are given by

$$\left(\begin{bmatrix} \frac{16a}{3h} & -\frac{8a}{3h} \\ -\frac{8a}{3h} & \frac{7a}{3h} + \beta \end{bmatrix} + \begin{bmatrix} \frac{16ch}{30} & \frac{2ch}{30} \\ \frac{2ch}{30} & \frac{4ch}{30} \end{bmatrix} - \lambda \begin{bmatrix} \frac{16bh}{30} & \frac{2bh}{30} \\ \frac{2ch}{30} & \frac{4ch}{30} \end{bmatrix} \right) \begin{Bmatrix} U_2 \\ U_3 \end{Bmatrix} = \begin{Bmatrix} 0 \\ 0 \end{Bmatrix}$$

Setting the determinant of the coefficient matrix to zero, we obtain the characteristic polyniomial.

Problem 6.2: Determine the first two longitudinal frequencies of a rod ($E,\ A,\ L$) fixed at one end and spring-supported at the other:

$$-EA\frac{\partial^2 u}{\partial x^2} + \rho A \frac{\partial^2 u}{\partial t^2} = 0 \quad \text{for } 0 < x < L$$

$$u(0) = 0, \quad \left(EA\frac{du}{dx} + ku \right) \Bigg|_{x=L} = 0$$

Use (a) two linear finite elements and (b) one quadratic element.

PROPRIETARY MATERIAL. ©The McGraw-Hill Companies, Inc. All rights reserved.

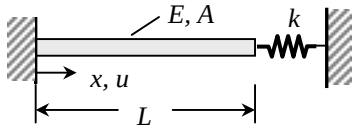

Figure P6.2

Solution: Note that the problem at hand is a hyperbolic equation. Hence, the eigenvalue is the square of the natural frequency of axial vibration, ω.

(a) For the mesh of two linear elements, the assembled equations of the eigenvalue problem are (see Section 6.1.4):

$$\left(\frac{EA}{h}\begin{bmatrix} 1 & -1 & 0 \\ -1 & 2 & -1 \\ 0 & -1 & 1 \end{bmatrix} - \omega^2 \frac{\rho A h}{6}\begin{bmatrix} 2 & 1 & 0 \\ 1 & 4 & 1 \\ 0 & 1 & 2 \end{bmatrix}\right)\begin{Bmatrix} U_1 \\ U_2 \\ U_3 \end{Bmatrix} = \begin{Bmatrix} Q_1^1 \\ Q_2^1 + Q_1^2 \\ Q_2^2 \end{Bmatrix}$$

where $h = L/2$. The boundary conditions are: $U_1 = 0$ and $Q_2^2 = -kU_3$. It is clear that the term kU_3, when taken to the left side, should add to the second diagonal term of the stiffness matrix (because kU_3 does not contain λ in order to add it to the mass matrix). The condensed equations are given by

$$\left(\frac{EA}{h}\begin{bmatrix} 2 & -1 \\ -1 & 1+c \end{bmatrix} - \omega^2 \frac{\rho A h}{6}\begin{bmatrix} 4 & 1 \\ 1 & 2 \end{bmatrix}\right)\begin{Bmatrix} U_2 \\ U_3 \end{Bmatrix} = \begin{Bmatrix} 0 \\ 0 \end{Bmatrix}$$

where $c = \frac{kh}{EA}$. Setting the determinant of the coefficient matrix to zero, we obtain the characteristic polyniomial,

$$7\bar{\lambda}^2 - (10 + 4c)\bar{\lambda} + (1 + 2c) = 0, \text{ where } \bar{\lambda} = \frac{\rho h^2}{6E} \cdot \omega^2$$

This gives two roots, which are the two eigenvalues. The natural frequncies are obtained from

$$\omega_i = \frac{1}{h}\sqrt{\frac{6E\bar{\lambda}_i}{\rho}}, \quad i = 1, 2$$

(b) For the mesh of one quadratic element, the equations of the eigenvalue problem are:

$$\left(\frac{EA}{3h}\begin{bmatrix} 7 & -8 & 1 \\ -8 & 16 & -8 \\ 1 & -8 & 7 \end{bmatrix} - \omega^2 \frac{\rho A h}{30}\begin{bmatrix} 4 & 2 & -1 \\ 2 & 16 & 2 \\ -1 & 2 & 4 \end{bmatrix}\right)\begin{Bmatrix} U_1 \\ U_2 \\ U_3 \end{Bmatrix} = \begin{Bmatrix} Q_1^1 \\ Q_2^1 \\ Q_3^1 \end{Bmatrix}$$

PROPRIETARY MATERIAL. ©The McGraw-Hill Companies, Inc. All rights reserved.

where $h = L$. The boundary conditions are: $U_1 = 0$ and $Q_3^1 = -kU_3$. The condensed equations are given by

$$\left(\frac{EA}{3h}\begin{bmatrix} 16 & -8 \\ -8 & 7+c \end{bmatrix} - \omega^2 \frac{\rho A h}{30}\begin{bmatrix} 16 & 2 \\ 2 & 4 \end{bmatrix}\right)\begin{Bmatrix} U_2 \\ U_3 \end{Bmatrix} = \begin{Bmatrix} 0 \\ 0 \end{Bmatrix}$$

where $c = \frac{3kh}{EA}$. Setting the determinant of the coefficient matrix to zero, we obtain the characteristic polyniomial,

$$15\bar{\lambda}^2 - (52+4c)\bar{\lambda} + (12+4c) = 0, \text{ where } \bar{\lambda} = \frac{\rho h^2}{10E}\cdot\omega^2$$

This gives two roots, and the natural frequncies are obtained from

$$\omega_i = \frac{1}{h}\sqrt{\frac{10E\bar{\lambda}_i}{\rho}}, \quad i = 1, 2.$$

Problem 6.3: Determine the smallest natural frequency of a beam with clamped ends, and of constant cross-sectional area A, moment of inertia I, and length L. Use the symmetry and two Euler–Bernoulli beam elements in the half beam.

Solution: Note that the beam problem is a hyperbolic equation, hence the eigenvalue is the square of the natural frequency of flexural vibration, ω. For a mesh of two Euler–Bernoulli elements in a half beam (*i.e.*, $h = L/4$), the assembled equations are given by

$$\left(\frac{2EI}{h^3}\begin{bmatrix} 6 & -3h & -6 & -3h & 0 & 0 \\ -3h & 2h^2 & 3h & h^2 & 0 & 0 \\ -6 & 3h & 6+6 & 3h-3h & -6 & -3h \\ -3h & h^2 & 3h-3h & 2h^2+2h^2 & 3h & h^2 \\ 0 & 0 & -6 & 3h & 6 & 3h \\ 0 & 0 & -3h & h^2 & 3h & 2h^2 \end{bmatrix}\right.$$

$$\left. -\omega^2\frac{\rho A h}{420}\begin{bmatrix} 156 & -22h & 54 & 13h & 0 & 0 \\ -22h & 4h^2 & -13h & -3h^2 & 0 & 0 \\ 54 & -13h & 156+156 & 22h-22h & 54 & 13h \\ -13h & -3h^2 & 22h-22h & 4h^2+4h^2 & -13h & -3h^2 \\ 0 & 0 & 54 & -13h & 156 & 22h \\ 0 & 0 & 13h & -3h^2 & 22h & 4h^2 \end{bmatrix}\right)\begin{Bmatrix} U_1 \\ U_2 \\ U_3 \\ U_4 \\ U_5 \\ U_6 \end{Bmatrix}$$

$$= \begin{Bmatrix} Q_1^1 \\ Q_2^1 \\ Q_3^1 + Q_1^2 \\ Q_4^1 + Q_2^2 \\ Q_3^2 \\ Q_4^2 \end{Bmatrix}$$

PROPRIETARY MATERIAL. ©The McGraw-Hill Companies, Inc. All rights reserved.

The boundary conditions are: $U_1 = U_2 = U_6 = 0$ and $Q_3^2 = 0$. The condensed equations are given by

$$\left(\frac{2EI}{h^3}\begin{bmatrix} 12 & 0 & -6 \\ 0 & 4h^2 & 3h \\ -6 & 3h & 6 \end{bmatrix} - \omega^2 \frac{\rho A h}{420}\begin{bmatrix} 312 & 0 & 54 \\ 0 & 8h^2 & -13h \\ 54 & -13h & 156 \end{bmatrix}\right)\begin{Bmatrix} U_3 \\ U_4 \\ U_5 \end{Bmatrix} = \begin{Bmatrix} 0 \\ 0 \\ 0 \end{Bmatrix}$$

The determinant of the coefficient matrix yields a cubic polynomial in ω^2. Note that by considering the half beam we restricted the natural frequencies to those of symmetric modes. The antisymmetric modes (only) can be obtained by using $U_5 = 0$ instead of $U_6 = 0$.

Problem 6.4: Re-solve the above problem with two reduced-integration Timoshenko beam (RIE) elements in the half-beam.

Solution: The assembled equations are given by

$$\left(\frac{GAK_s}{4h}\begin{bmatrix} 4 & -2h & -4 & -2h & 0 & 0 \\ -2h & h^2+\alpha & 2h & h^2-\alpha & 0 & 0 \\ -4 & 2h & 4+4 & 2h-2h & -4 & -2h \\ -2h & h^2-\alpha & 2h-2h & 2(h^2+\alpha) & 2h & h^2-\alpha \\ 0 & 0 & -4 & 2h & 4 & 2h \\ 0 & 0 & -2h & h^2-\alpha & 2h & h^2+\alpha \end{bmatrix}\right.$$

$$\left. -\omega^2\frac{h}{6}\begin{bmatrix} 2A & 0 & A & 0 & 0 & 0 \\ 0 & 2I & 0 & I & 0 & 0 \\ A & 0 & 2A+2A & 0 & A & 0 \\ 0 & I & 0 & 2I+2I & 0 & I \\ 0 & 0 & A & 0 & 2A & 0 \\ 0 & 0 & 0 & I & 0 & 2I \end{bmatrix}\right)\begin{Bmatrix} U_1 \\ U_2 \\ U_3 \\ U_4 \\ U_5 \\ U_6 \end{Bmatrix} = \begin{Bmatrix} Q_1^1 \\ Q_2^1 \\ Q_3^1+Q_1^2 \\ Q_4^1+Q_2^2 \\ Q_3^2 \\ Q_4^2 \end{Bmatrix}$$

where $\alpha = \frac{4EI}{GAK_s}$. Using the boundary conditions, $U_1 = U_2 = U_6 = 0$, we write the eigenvalue problem,

$$\left(\frac{GAK_s}{4h}\begin{bmatrix} 8 & 0 & -4 \\ 0 & 2(h^2+\alpha) & 2h \\ -4 & 2h & 4 \end{bmatrix} - \omega^2\frac{h}{6}\begin{bmatrix} 4A & 0 & A \\ 0 & 4I & 0 \\ A & 0 & 2A \end{bmatrix}\right)\begin{Bmatrix} U_3 \\ U_4 \\ U_5 \end{Bmatrix} = \begin{Bmatrix} 0 \\ 0 \\ 0 \end{Bmatrix}$$

Problem 6.5: Consider a beam (of Young's modulus E, shear modulus G, area of cross section A, second moment area about the axis of bending I, and length L) with its left end ($x = 0$) clamped and its right end ($x = L$) is supported vertically by a linear elastic spring (see Figure P6.5). Determine the fundamental natural frequency using (a) one Euler-Bernoulli beam element and (b) one Timoshenko beam (IIE) element (use the same mass matrix in both elements).

PROPRIETARY MATERIAL. ©The McGraw-Hill Companies, Inc. All rights reserved.

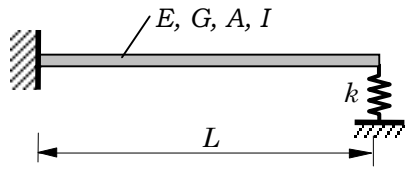

Figure P6.5

Solution: One-element mesh is used. The boundary conditions are: $U_1 = U_2 = 0$ and $Q_3^1 = -kU_3$. The eigenvalue problems are formulated below.

(a) *Euler–Bernoulli Beam Element*

$$\left(\frac{2EI}{h^3}\begin{bmatrix} 6+c & 3h \\ 3h & 2h^2 \end{bmatrix} - \omega^2 \frac{\rho A h}{420}\begin{bmatrix} 156 & 22h \\ 22h & 4h^2 \end{bmatrix}\right)\begin{Bmatrix} U_3 \\ U_4 \end{Bmatrix} = \begin{Bmatrix} 0 \\ 0 \end{Bmatrix}$$

where $c = kh^3/2EI$.

(b) *Timoshenko Beam Element (RIE)* (the same procedure applies to the CIE element)

$$\left(\frac{GAK_s}{4h}\begin{bmatrix} 4+c & 2h \\ 2h & h^2+\alpha \end{bmatrix} - \omega^2 \frac{h}{6}\begin{bmatrix} 2A & 0 \\ 0 & 2I \end{bmatrix}\right)\begin{Bmatrix} U_3 \\ U_4 \end{Bmatrix} = \begin{Bmatrix} 0 \\ 0 \end{Bmatrix}$$

where $c = \frac{4kh}{GAK_s}$. The characteristic polynomial is given by

$$140\bar{\lambda}^2 - (204 + 4c)\bar{\lambda} + (3 + 2c) = 0$$

where $\bar{\lambda} = \frac{\rho A h^4}{840EI}\omega^2$.

Problem 6.6: Determine the critical buckling load of a cantilever beam (A, I, L, E) using (a) one Euler–Bernoulli beam element and (b) one Timoshenko beam element (RIE).

Solution: One element mesh is used. The boundary conditions are: $U_1 = U_2 = 0$. The eigenvalue problems are formulated below.

(a) *Euler–Bernoulli Beam Element*

$$\left(\frac{2EI}{h^3}\begin{bmatrix} 6 & 3h \\ 3h & 2h^2 \end{bmatrix} - P_{cr}\frac{1}{30h}\begin{bmatrix} 36 & 3h \\ 3h & 4h^2 \end{bmatrix}\right)\begin{Bmatrix} U_3 \\ U_4 \end{Bmatrix} = \begin{Bmatrix} 0 \\ 0 \end{Bmatrix}$$

where P_{cr} denotes the critical buckling load.

PROPRIETARY MATERIAL. ©The McGraw-Hill Companies, Inc. All rights reserved.

(b) *Timoshenko Beam Element*

$$\left(\frac{GAK_s}{4h}\begin{bmatrix}4 & 2h\\ 2h & h^2+\alpha\end{bmatrix} - P_{cr}\frac{1}{h}\begin{bmatrix}1 & 0\\ 0 & 1\end{bmatrix}\right)\begin{Bmatrix}U_3\\ U_4\end{Bmatrix} = \begin{Bmatrix}0\\ 0\end{Bmatrix}$$

where $\alpha = \frac{4EI}{GAK_s}$.

Problem 6.7: Consider a simply supported beam (of Young's modulus E, mass density ρ, area of cross section A, second moment of area about the axis of bending I, and length L) with an elastic support at the center of the beam (see Figure P6.7). Determine the fundamental natural frequency using the minimum number of Euler-Bernoulli beam elements.

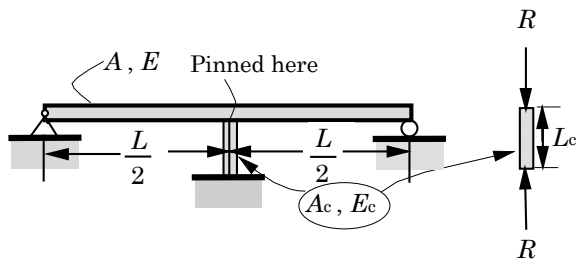

Problem 6.7

Solution: One element mesh is used. The boundary conditions are: $U_1 = 0$, $U_4 = 0$ and $Q_3^1 = -0.5kU_3$. Hence, we eliminate the first row and column and the last row and column and obtain the eigenvalue problem

$$\left(\frac{2EI}{h^3}\begin{bmatrix}2h^2 & 3h\\ 3h & 6+c\end{bmatrix} - \omega^2\frac{\rho Ah}{420}\begin{bmatrix}4h^2 & -13h\\ -13h & 156\end{bmatrix}\right)\begin{Bmatrix}U_2\\ U_3\end{Bmatrix} = \begin{Bmatrix}0\\ 0\end{Bmatrix}$$

where $c = kh^3/4EI$, $k = A_cE_c/h_c$, and $h = L/2$. The frequency equation is obtained by setting the coefficient matrix to zero:

$$\left|\frac{2EI}{h^3}\begin{bmatrix}2h^2 & 3h\\ 3h & 6+c\end{bmatrix} - \omega^2\frac{\rho Ah}{420}\begin{bmatrix}4h^2 & -13h\\ -13h & 156\end{bmatrix}\right| = 0$$

$$\left|\begin{bmatrix}2h^2 & 3h\\ 3h & 6+c\end{bmatrix} - \lambda\begin{bmatrix}4h^2 & -13h\\ -13h & 156\end{bmatrix}\right| = 0, \quad \lambda = \omega^2\frac{\rho Ah^4}{840EI}$$

The characteristic polynomial is

$$455\lambda^2 - 2(129+c)\lambda + 3 + 2c = 0$$

PROPRIETARY MATERIAL. ©The McGraw-Hill Companies, Inc. All rights reserved.

Problem 6.8: The natural vibration of a beam under applied axial compressive load N^0 is governed by the differential equation

$$EI\frac{d^4w}{dx^4} + N^0\frac{d^2w}{dx^2} = \lambda w$$

where λ denotes nondimensional frequency of natural vibration, and EI is the flexural stiffness of the beam. (a) Determine the fundamental (i.e., smallest) natural frequency ω of a cantilever beam (i.e., fixed at one end and free at the other end) of length L with axial compressive load N_0 using one beam element. (b) What is the buckling load of the beam? You are required to give the final characteristic equation in each case.

Solution: The finite element model of the equation is

$$\left(\mathbf{K}^e - \lambda\mathbf{M}^e - N^0\mathbf{G}^e\right)\boldsymbol{\Delta}^e = \mathbf{Q}^e$$

where

$$K^e_{ij} = \int_{x_a}^{x_b} EI\frac{d^2\phi_i}{dx^2}\frac{d^2\phi_j}{dx^2}\,dx, \quad M^e_{ij} = \int_{x_a}^{x_b} \phi_i\phi_j\,dx, \quad G^e_{ij} = \int_{x_a}^{x_b} \frac{d\phi_i}{dx}\frac{d\phi_j}{dx}\,dx$$

and $\boldsymbol{\Delta}^e$ and $\mathbf{Q}^e$ are the usual nodal displacement and force vectors. Here $\mathbf{K}^e$ is the stiffness matrix, $\mathbf{M}^e$ is the mass matrix and $\mathbf{G}^e$ is the geometric stiffness matrix are given for the Euler–Bernoulli element as

$$\mathbf{K}^e = \frac{2EI}{h^3}\begin{bmatrix} 6 & -3h & -6 & -3h \\ -3h & 2h^2 & 3h & h^2 \\ -6 & 3h & 6 & 3h \\ -3h & h^2 & 3h & 2h^2 \end{bmatrix}$$

$$\mathbf{M}^e = \frac{ch}{420}\begin{bmatrix} 156 & -22h & 54 & 13h \\ -22h & 4h^2 & -13h & -3h^2 \\ 54 & -13h & 156 & 22h \\ 13h & -3h^2 & 22h & 4h^2 \end{bmatrix}$$

$$\mathbf{G}^e = \frac{1}{30h}\begin{bmatrix} 36 & -3h & -36 & -3h \\ -3h & 4h^2 & 3h & -h^2 \\ -36 & 3h & 36 & 3h \\ -3h & -h^2 & 3h & 4h^2 \end{bmatrix}$$

Using one element mesh in the beam, we obtain

$$\left(\frac{2EI}{L^3}\begin{bmatrix} 6 & -3L & -6 & -3L \\ -3L & 2L^2 & 3L & L^2 \\ -6 & 3L & 6 & 3L \\ -3L & L^2 & 3L & 2L^2 \end{bmatrix} - \lambda\frac{L}{420}\begin{bmatrix} 156 & -22L & 54 & 13L \\ -22L & 4L^2 & -13L & -3L^2 \\ 54 & -13L & 156 & 22L \\ 13L & -3L^2 & 22L & 4L^2 \end{bmatrix}\right.$$
$$\left. - \frac{N^0}{30L}\begin{bmatrix} 36 & -3L & -36 & -3L \\ -3L & 4L^2 & 3L & -L^2 \\ -36 & 3L & 36 & 3L \\ -3L & -L^2 & 3L & 4L^2 \end{bmatrix}\right)\begin{Bmatrix} W_1 \\ \Theta_1 \\ W_2 \\ \Theta_2 \end{Bmatrix} = \begin{Bmatrix} Q_1 \\ Q_2 \\ Q_3 \\ Q_4 \end{Bmatrix}$$

PROPRIETARY MATERIAL. ©The McGraw-Hill Companies, Inc. All rights reserved.

The boundary conditions are $W_1 = 0, \Theta_1 = 0, Q_3 = 0$ and $Q_4 = 0$. Hence, the condensed equations are

$$\left(\frac{2EI}{L^3}\begin{bmatrix} 6 & 3L \\ 3L & 2L^2 \end{bmatrix} - \lambda\frac{L}{420}\begin{bmatrix} 156 & 22L \\ 22L & 4L^2 \end{bmatrix} - \frac{N^0}{30L}\begin{bmatrix} 36 & 3L \\ 3L & 4L^2 \end{bmatrix}\right)\begin{Bmatrix} W_2 \\ \Theta_2 \end{Bmatrix} = \begin{Bmatrix} 0 \\ 0 \end{Bmatrix}$$

Setting the determinant to zero and solving for the smaller root of the quadratic equation in λ, we obtain the required fundamental frequency. The buckling load N_0 is calculated by setting $\lambda = 0$. For example, consider the case in which $\lambda = 0$ ($\bar{\lambda} = (L^2/60EI)N_0$)

$$12L^2(1 - 6\bar{\lambda})(1 - 2\bar{\lambda}) - 9L^2(-\bar{\lambda})^2 = 0$$

from which we obtain the lowest buckling load ($\bar{\lambda}_1 = 0.0414$)

$$(N^0)_{\text{min}} = 2.486\frac{EI}{L^2}$$

The critical buckling load as per the Euler–Bernoulli beam-column analysis is

$$N_{\text{crit}} = \frac{\pi^2}{4}\frac{EI}{L^2} = 2.467\frac{EI}{L^2}$$

(less than 0.8% error!).

Problem 6.9: Determine the fundamental natural frequency of the truss shown in Fig. P6.9 (you are required only to formulate the problem).

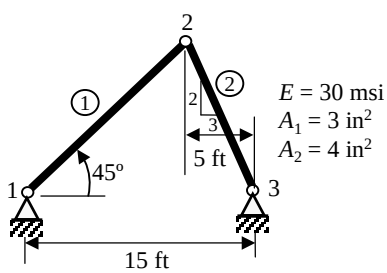

Figure P6.9

Solution: Analogous to the global stiffness matrix, the element mass matrix in the global coordinate system is given by

$$[M^e] = [T^e]^T[\bar{M}^e][T^e], \;\; [\bar{M}^e] = \frac{\rho_e A_e h_e}{6}\begin{bmatrix} 2 & 0 & 1 & 0 \\ 0 & 0 & 0 & 0 \\ 1 & 0 & 2 & 0 \\ 0 & 0 & 0 & 0 \end{bmatrix}$$

PROPRIETARY MATERIAL. ©The McGraw-Hill Companies, Inc. All rights reserved.

$$[T^e] = \begin{bmatrix} \cos\alpha & \sin\alpha & 0 & 0 \\ -\sin\alpha & \cos\alpha & 0 & 0 \\ 0 & 0 & \cos\alpha & \sin\alpha \\ 0 & 0 & -\sin\alpha & \cos\alpha \end{bmatrix}$$

We obtain,

$$[M^e] = \begin{bmatrix} 2\cos^2\alpha & 2\cos\alpha\sin\alpha & \cos^2\alpha & \cos\alpha\sin\alpha \\ 2\cos\alpha\sin\alpha & 2\sin^2\alpha & \cos\alpha\sin\alpha & \sin^2\alpha \\ \cos^2\alpha & \cos\alpha\sin\alpha & 2\cos^2\alpha & 2\cos\alpha\sin\alpha \\ \cos\alpha\sin\alpha & \sin^2\alpha & 2\cos\alpha\sin\alpha & 2\sin^2\alpha \end{bmatrix}$$

For the present problem (see the solution to Problem 4.38), we have $\alpha_1 = 45°$ and $\alpha_2 = \tan^{-1}(2)$. The eigenvalue problem becomes

$$\left(\begin{bmatrix} K^1_{33} + K^2_{11} & K^1_{34} + K^2_{12} \\ K^1_{43} + K^2_{21} & K^1_{44} + K^2_{22} \end{bmatrix} - \omega^2 \begin{bmatrix} M^1_{33} + M^2_{11} & M^1_{34} + M^2_{12} \\ M^1_{43} + M^2_{21} & M^1_{44} + M^2_{22} \end{bmatrix} \right) \begin{Bmatrix} U_3 \\ U_4 \end{Bmatrix} = \begin{Bmatrix} 0 \\ 0 \end{Bmatrix}$$

Problem 6.10: Determine the fundamental natural frequency of the truss shown in Fig. P6.10 (you are required only to formulate the problem).

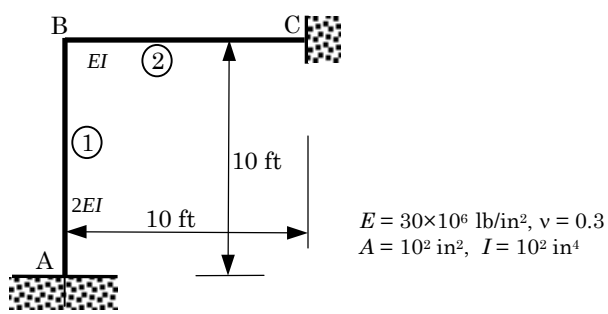

Figure P6.10

Solution: The element mass matrix in the global coordinate is given by

$$[M^e] = [T^e]^T [\bar{M}^e][T^e]$$

$$[\bar{M}^e] = \frac{\rho_e A_e h_e}{420} \begin{bmatrix} 140 & 0 & 0 & 70 & 0 & 0 \\ 0 & 156 & -22h & 0 & 54 & 13h \\ 0 & -22h & 4h^2 & 0 & -13h & -3h^2 \\ 70 & 0 & 0 & 140 & 0 & 0 \\ 0 & 54 & -13h & 0 & 156 & 22h \\ 0 & 13h & -3h^2 & 0 & 22h & 4h^2 \end{bmatrix}$$

PROPRIETARY MATERIAL. ©The McGraw-Hill Companies, Inc. All rights reserved.

and $[T^e]$ is defined in Eqn. (4.53a). The eigenvalue problem becomes,

$$\left(\begin{bmatrix} K^1_{44}+K^2_{11} & K^1_{45}+K^2_{12} & K^1_{46}+K^2_{13} \\ K^1_{54}+K^2_{21} & K^1_{55}+K^2_{22} & K^1_{56}+K^2_{23} \\ K^1_{64}+K^2_{31} & K^1_{65}+K^2_{32} & K^1_{66}+K^2_{33} \end{bmatrix}\right.$$
$$\left. -\omega^2 \begin{bmatrix} M^1_{44}+M^2_{11} & M^1_{45}+M^2_{12} & M^1_{46}+M^2_{13} \\ M^1_{54}+M^2_{21} & M^1_{55}+M^2_{22} & M^1_{56}+M^2_{23} \\ M^1_{64}+M^2_{31} & M^1_{65}+M^2_{32} & M^1_{66}+M^2_{33} \end{bmatrix}\right) \begin{Bmatrix} U_4 \\ U_5 \\ U_6 \end{Bmatrix} = \begin{Bmatrix} 0 \\ 0 \\ 0 \end{Bmatrix}$$

Problem 6.11: Determine the first two longitudinal natural frequencies of a rod ($A,\ E,\ L,\ m$), fixed at one end and with an attached mass m_2 at the other. Use two linear elements. *Hint:* Note that the boundary conditions for the problem are $u(0) = 0$ and $(EA\ \partial u/\partial x + m_2\ \partial^2 u/\partial t^2)|_{x=L} = 0$.

Solution: For the mesh of two linear elements, the assembled equations of the eigenvalue problem are:

$$\left(\frac{EA}{h}\begin{bmatrix} 1 & -1 & 0 \\ -1 & 2 & -1 \\ 0 & -1 & 1 \end{bmatrix} - \omega^2 \frac{\rho A h}{6}\begin{bmatrix} 2 & 1 & 0 \\ 1 & 4 & 1 \\ 0 & 1 & 2 \end{bmatrix}\right) \begin{Bmatrix} U_1 \\ U_2 \\ U_3 \end{Bmatrix} = \begin{Bmatrix} Q^1_1 \\ Q^1_2 + Q^2_1 \\ Q^2_2 \end{Bmatrix}$$

where $h = L/2$. The boundary conditions are: $U_1 = 0$ and $Q^2_2 = m_2\omega^2 U_3$. It is clear that the term $m_2\omega^2$, when taken to the left side, should add to the second diagonal term of the mass matrix (because kU_3 does not contain λ in order to add it to the stiffness matrix). The condensed equations are given by

$$\left(\frac{EA}{h}\begin{bmatrix} 2 & -1 \\ -1 & 1 \end{bmatrix} - \omega^2 \frac{\rho A h}{6}\begin{bmatrix} 4 & 1 \\ 1 & 2+c \end{bmatrix}\right) \begin{Bmatrix} U_2 \\ U_3 \end{Bmatrix} = \begin{Bmatrix} 0 \\ 0 \end{Bmatrix}$$

where $c = \frac{6m_2}{\rho A h}$. Setting the determinant of the coefficient matrix to zero, we obtain the characteristic polynomial.

Problem 6.12: The equation governing torsional vibration of a circular rod is

$$-GJ\frac{\partial^2 \phi}{\partial x^2} + mJ\frac{\partial^2 \phi}{\partial t^2} = 0$$

where ϕ is the angular displacement, J the moment of inertia, G the shear modulus, and m the density. Determine the fundamental torsional frequency of a rod with disk (J_1) attached at each end. Use the symmetry and (a) two linear elements, (b) one quadratic element.

Solution: Note that the problem at hand is a hyperbolic equation, hence the eigenvalue is the square of the natural frequency of torsional vibration, ω.

PROPRIETARY MATERIAL. ©The McGraw-Hill Companies, Inc. All rights reserved.

(a) For the mesh of two linear elements, the assembled equations of the eigenvalue problem are:

$$\left(\frac{GJ}{h}\begin{bmatrix} 1 & -1 & 0 \\ -1 & 2 & -1 \\ 0 & -1 & 1 \end{bmatrix} - \omega^2 \frac{mJh}{6}\begin{bmatrix} 2 & 1 & 0 \\ 1 & 4 & 1 \\ 0 & 1 & 2 \end{bmatrix}\right)\begin{Bmatrix} U_1 \\ U_2 \\ U_3 \end{Bmatrix} = \begin{Bmatrix} Q_1^1 \\ Q_2^1 + Q_1^2 \\ Q_2^2 \end{Bmatrix}$$

where $h = L/4$. The boundary conditions are: $Q_1^1 = m_1 J_1 \omega^2$ and $U_3 = 0$. The condensed equations are given by

$$\left(\frac{GJ}{h}\begin{bmatrix} 1 & -1 \\ -1 & 2 \end{bmatrix} - \omega^2 \frac{mJh}{6}\begin{bmatrix} 2+c & 1 \\ 1 & 4 \end{bmatrix}\right)\begin{Bmatrix} U_1 \\ U_2 \end{Bmatrix} = \begin{Bmatrix} 0 \\ 0 \end{Bmatrix}$$

where $c = \frac{6m_1 J_1}{mJh}$.

(b) For the mesh of one quadratic element, the equations of the eigenvalue problem are:

$$\left(\frac{GJ}{3h}\begin{bmatrix} 7 & -8 & 1 \\ -8 & 16 & -8 \\ 1 & -8 & 7 \end{bmatrix} - \omega^2 \frac{mJh}{30}\begin{bmatrix} 4 & 2 & -1 \\ 2 & 16 & 2 \\ -1 & 2 & 4 \end{bmatrix}\right)\begin{Bmatrix} U_1 \\ U_2 \\ U_3 \end{Bmatrix} = \begin{Bmatrix} Q_1^1 \\ Q_2^1 \\ Q_3^1 \end{Bmatrix}$$

where $h = L/2$. The condensed equations are given by

$$\left(\frac{GJ}{3h}\begin{bmatrix} 7 & -8 \\ -8 & 16 \end{bmatrix} - \omega^2 \frac{mJh}{30}\begin{bmatrix} 4+c & 2 \\ 2 & 16 \end{bmatrix}\right)\begin{Bmatrix} U_1 \\ U_2 \end{Bmatrix} = \begin{Bmatrix} 0 \\ 0 \end{Bmatrix}$$

where $c = \frac{30m_1 J_1}{mJh}$.

Problem 6.13: The equations governing the motion of a beam according to the Timoshenko beam theory can be reduced to the single equation

$$a^2 \frac{\partial^4 w}{\partial x^4} + \frac{\partial^2 w}{\partial t^2} - b^2\left(1 + \frac{E}{kG}\right)\frac{\partial^4 w}{\partial x^2 \partial t^2} + \frac{b^2 m}{kG}\frac{\partial^4 w}{\partial t^4} = 0$$

where $a^2 = EI/mA$ and $b^2 = I/A$. Here E is the Young's modulus, G is the shear modulus, m is the mass per unit length, A is the area of cross sectin, and I is the moment of inertia. Assuming that $(b^2 m/kG) << 1$ (i.e., neglect the last term in the governing equation), formulate the finite element model of the (a) eigenvalue problem for the determination of natural frequencies, and (b) fully discretized problem for the determination of the transient response.

Solution: (a) This is a fourth–order hyperbolic differential equation. Let

$$w(x,t) = W(x)e^{-i\omega t}$$

PROPRIETARY MATERIAL. ©The McGraw-Hill Companies, Inc. All rights reserved.

and reduce the given equation to

$$a^2\frac{d^4W}{dx^4} - \omega^2 W + \omega^2 b^2\left(1+\frac{E}{kG}\right)\frac{d^2W}{dx^2} = 0$$

The weak form of the equation is given by

$$\begin{aligned}
0 &= \int_{x_a}^{x_b} v\left[a^2\frac{d^4W}{dx^4} - \omega^2\left(W - c^2\frac{d^2W}{dx^2}\right)\right]dx \\
&= \int_{x_a}^{x_b}\left[a^2\frac{d^2v}{dx^2}\frac{d^2W}{dx^2} - \omega^2\left(vW + c^2\frac{dv}{dx}\frac{dW}{dx}\right)\right]dx \\
&\quad - v(x_a)Q_1 - v(x_b)Q_3 - \left(-\frac{dv}{dx}\right)_A Q_2 - \left(-\frac{dv}{dx}\right)_B Q_4
\end{aligned}$$

where v is the weight function, $c^2 = b^2\left(1+\frac{E}{kG}\right)$, and

$$\begin{aligned}
Q_1 &= \left[a^2\frac{d^3W}{dx^3} + \omega^2c^2\frac{dW}{dx}\right]_A, & Q_3 &= -\left[a^2\frac{d^3W}{dx^3} + \omega^2c^2\frac{dW}{dx}\right]_B \\
Q_2 &= \left[a^2\frac{d^2W}{dx^2}\right]_A, & Q_4 &= -\left[a^2\frac{d^2W}{dx^2}\right]_B
\end{aligned}$$

The finite element model is given by

$$([K^e] - \omega^2[M^e])\{\Delta^e\} = \{Q^e\}$$

where

$$W(x) \approx \sum_{j=1}^{4}\Delta_j^e\varphi_j^e(x)$$

and

$$\begin{aligned}
K_{ij}^e &= \int_{x_a}^{x_b} a^2\frac{d^2\varphi_i}{dx^2}\frac{d^2\varphi_j}{dx^2}dx \\
M_{ij}^e &= \int_{x_a}^{x_b}\left[\varphi_i\varphi_j + b^2\left(1+\frac{E}{kG}\right)\frac{d\varphi_i}{dx}\frac{d\varphi_j}{dx}\right]dx
\end{aligned}$$

and φ_i are the Hermite family of interpolation functions.

(b) The semidiscrete weak form (neglecting the term involving the fourth-order derivative with respect to t) is given by

$$\begin{aligned}
0 &= \int_{x_a}^{x_b} v\left[a^2\frac{\partial^4 w}{\partial x^4} + \frac{\partial^2 w}{\partial t^2} - b^2\left(1+\frac{E}{kG}\right)\frac{\partial^4 w}{\partial x^2\partial t^2}\right]dx \\
&= \int_{x_a}^{x_b}\left[a^2\frac{\partial^2 v}{\partial x^2}\frac{\partial^2 w}{\partial x^2} + v\frac{\partial^2 w}{\partial t^2} + c^2\frac{dv}{dx}\frac{\partial^3 w}{\partial x\partial t^2}\right]dx \\
&\quad - v(x_a)Q_1 - v(x_b)Q_3 - \left(-\frac{dv}{dx}\right)_A Q_2 - \left(-\frac{dv}{dx}\right)_B Q_4
\end{aligned}$$

PROPRIETARY MATERIAL. ©The McGraw-Hill Companies, Inc. All rights reserved.

wehere

$$Q_1 = \left[a^2\frac{\partial^3 w}{\partial x^3} - c^2\frac{\partial^3 w}{\partial x \partial t^2}\right]_A, \quad Q_3 = -\left[a^2\frac{\partial^3 w}{\partial x^3} - c^2\frac{\partial^3 w}{\partial x \partial t^2}\right]_B$$

$$Q_2 = \left[a^2\frac{\partial^2 w}{\partial x^2}\right]_A, \qquad Q_4 = -\left[a^2\frac{\partial^2 w}{\partial x^2}\right]_B$$

The finite element model is given by

$$[K^e]\{\Delta^e\} + [M^e]\{\ddot{\Delta}^e\} = \{Q^e\}$$

where K^e_{ij} and M^e_{ij} are the same as defined earlier.

The fully discretized finite element model can be obtained as discussed in Section 6.2.

Problem 6.14: Use the finite element model of Problem 6.13 to determine the fundamental frequency of a simply supported beam.

Solution: This problem requires the evaluation of the element matrices $[K^e]$ and $[M^e]$ defined in Problem 6.10. These can be easily identified with the matrices already given in the book when ϕ_i are the Hermite cubic interpolation functions: the stiffness matrix is the same as that given in Eqn. (4.15); the mass matrix contains two parts, and they are given by the matrices in Eqns. (6.26a) and (6.26b), respectively. We have

$$[K^e] = \frac{2a^2}{h^3}\begin{bmatrix} 6 & -3h & -6 & -3h \\ -3h & 2h^2 & 3h & h^2 \\ -6 & 3h & 6 & 3h \\ -3h & h^2 & 3h & 2h^2 \end{bmatrix} \tag{1}$$

$$[M^e] = \frac{h}{420}\begin{bmatrix} 156 & -22h & 54 & 13h \\ -22h & 4h^2 & -13h & -3h^2 \\ 54 & -13h & 156 & 22h \\ 13h & -3h^2 & 22h & 2h^2 \end{bmatrix} + \frac{c^2}{30h}\begin{bmatrix} 36 & -3h & -36 & -3h \\ -3h & 4h^2 & 3h & -h^2 \\ -36 & 3h & 36 & 3h \\ -3h & -h^2 & 3h & 4h^2 \end{bmatrix} \tag{2}$$

We use the symmetry to model one–half of the simply–supported beam with one element to determine the fundamental frequency. We have

$$\left(\frac{2a^2}{h^3}\begin{bmatrix} 6 & -3h & -6 & -3h \\ -3h & 2h^2 & 3h & h^2 \\ -6 & 3h & 6 & 3h \\ -3h & h^2 & 3h & 2h^2 \end{bmatrix} - \omega^2\frac{h}{420}\begin{bmatrix} 156 & -22h & 54 & 13h \\ -22h & 4h^2 & -13h & -3h^2 \\ 54 & -13h & 156 & 22h \\ 13h & -3h^2 & 22h & 2h^2 \end{bmatrix}\right.$$

$$\left. -\omega^2\frac{c^2}{30h}\begin{bmatrix} 36 & -3h & -36 & -3h \\ -3h & 4h^2 & 3h & -h^2 \\ -36 & 3h & 36 & 3h \\ -3h & -h^2 & 3h & 4h^2 \end{bmatrix}\right)\begin{Bmatrix} U_1 \\ U_2 \\ U_3 \\ U_4 \end{Bmatrix} = \begin{Bmatrix} Q_1^1 \\ Q_2^1 \\ Q_3^1 \\ Q_4^1 \end{Bmatrix} \tag{3}$$

PROPRIETARY MATERIAL. ©The McGraw-Hill Companies, Inc. All rights reserved.

The boundary conditions are: $U_1 = U_4 = 0$. The eigenvalue problem becomes,

$$\left[\frac{2a^2}{h^3}\begin{bmatrix} 2h^2 & 3h \\ 3h & 6 \end{bmatrix} - \omega^2\left(\frac{h}{420}\begin{bmatrix} 4h^2 & -13h \\ -13h & 156 \end{bmatrix} + \frac{c^2}{30h}\begin{bmatrix} 4h^2 & 3h \\ 3h & 36 \end{bmatrix}\right)\right]\begin{Bmatrix} U_2 \\ U_3 \end{Bmatrix} = \begin{Bmatrix} 0 \\ 0 \end{Bmatrix} \quad (4)$$

Problem 6.15: Find the critical buckling load P_{cr} by determining the eigenvalues of the equation

$$EI\frac{d^4w}{dx^4} + P_{\text{cr}}\frac{d^2w}{dx^2} = 0 \quad \text{for } 0 < x < L$$

$$w(0) = w(L) = 0, \quad \left(EI\frac{d^2w}{dx^2}\right)\bigg|_{x=0} = \left(EI\frac{d^2w}{dx^2}\right)\bigg|_{x=L} = 0$$

Use one Euler-Bernoulli element in the half-beam.

Solution: The finite element model of the equation is of the form,

$$[K^e]\{u^e\} - P_{cr}[G^e]\{u^e\} = \{Q^e\}$$

where $[K^e]$ is the stiffness matrix of the beam [see eqn. (4.15)], and $[G^e]$ is given by Eqn. (6.26b). We have

$$\left(\frac{2EI}{h^3}\begin{bmatrix} 6 & -3h & -6 & -3h \\ -3h & 2h^2 & 3h & h^2 \\ -6 & 3h & 6 & 3h \\ -3h & h^2 & 3h & 2h^2 \end{bmatrix} - P_{cr}\frac{1}{30h}\begin{bmatrix} 36 & -3h & -36 & -3h \\ -3h & 4h^2 & 3h & -h^2 \\ -36 & 3h & 36 & 3h \\ -3h & -h^2 & 3h & 4h^2 \end{bmatrix}\right)\begin{Bmatrix} U_1 \\ U_2 \\ U_3 \\ U_4 \end{Bmatrix}$$

$$= \begin{Bmatrix} Q_1^1 \\ Q_2^1 \\ Q_3^1 \\ Q_4^1 \end{Bmatrix} \quad (1)$$

In view of the boundary conditions, $U_1 = U_4 = 0$, the eigenvalue problem becomes,

$$\left(\frac{2EI}{h^3}\begin{bmatrix} 2h^2 & 3h \\ 3h & 6 \end{bmatrix} - P_{cr}\frac{1}{30h}\begin{bmatrix} 4h^2 & 3h \\ 3h & 36 \end{bmatrix}\right)\Bigg]\begin{Bmatrix} U_2 \\ U_3 \end{Bmatrix} = \begin{Bmatrix} 0 \\ 0 \end{Bmatrix} \quad (2)$$

The characteristic polynomial is obtained by setting the determinant of the coefficient matrix to zero:

$$(2h^2 - 4h^2\lambda)(6 - 36\lambda) - (3h - 3h\lambda)^2 = 0, \quad \text{where } \lambda = \frac{h^2}{60EI}P_{cr}$$

or

$$45\lambda^2 - 26\lambda + 1 = 0, \quad \text{or } \lambda_{1,2} = \frac{13 \pm \sqrt{124}}{45}, \quad \lambda_2 = 0.041433$$

PROPRIETARY MATERIAL. ©The McGraw-Hill Companies, Inc. All rights reserved.

Thus, P_{cr} is given by the smallest eigenvalue:

$$P_{cr} = \frac{60EI\lambda_2}{h^2} = \frac{240EI\lambda_2}{L^2} = 9.9439\frac{EI}{L^2}$$

Problem 6.16: Consider the partial differential equation arising in connection with unsteady heat transfer in an insulated rod:

$$\frac{\partial u}{\partial t} - \frac{\partial}{\partial x}\left(a\frac{\partial u}{\partial x}\right) = f \quad \text{for } 0 < x < L$$

$$u(0,t) = 0, \quad u(x,0) = u_0, \quad \left[a\frac{\partial u}{\partial x} + \beta(u - u_\infty) + \hat{q}\right]\Bigg|_{x=L} = 0$$

Following the procedure outlined in Section 6.2, derive the semidiscrete variational form, the semidiscrete finite element model, and the fully discretized finite element equations for a typical element.

Solution: The weak form is given by (see Problem 3.3)

$$\begin{aligned} 0 = \int_{x_a}^{x_b} \left(w\frac{\partial u}{\partial t} + a\frac{dw}{dx}\frac{\partial u}{\partial x} - wf\right) dx + [\beta_B w(x_b)u(x_b) - \beta_A w(x_a)u(x_a)] \\ + [\beta_A u_\infty^A w(x_a) - \beta_B u_\infty^B w(x_b)] - q(x_b)w(x_b) + q(x_a)w(x_a) \end{aligned} \tag{1}$$

and the semidiscrete finite element model is

$$[M^e]\{\dot{u}^e\} + [K^e]\{u^e\} = \{F^e\} \tag{2}$$

where

$$\begin{aligned} K_{ij}^e &= \int_{x_a}^{x_b} \left(a\frac{d\psi_i}{dx}\frac{d\psi_j}{dx} + c\psi_i\psi_j\right) dx + [\beta_B\psi_i(x_b)\psi_j(x_b) - \beta_A\psi_i(x_a)\psi_j(x_a)] \\ F_i &= \int_{x_a}^{x_b} f\psi_i dx + q(x_b)\psi_i(x_b) - q(x_a)\psi_i(x_a) + [\beta_B u_\infty^B\psi_i(x_b) - \beta_A u_\infty^A\psi_i(x_a)] \end{aligned}$$

The fully discretized finite element model is the same as in Eqn. (6.41).

Problem 6.17: Using a two-element (linear) model and the semidiscrete finite element equations derived in Problem 6.16, determine the nodal temperatures as functions of time for the case in which $a = 1$, $f = 0$, $u_0 = 1$, and $\hat{q} = 0$. Use the Laplace transform technique [see Reddy (1986)] to solve the ordinary differential equations in time.

PROPRIETARY MATERIAL. ©The McGraw-Hill Companies, Inc. All rights reserved.

Solution: The boundary condition at $x = 0$ is $u(0,t) = 0$ and the initial condition is $u(x,0) = u_0$. For the mesh of two linear elements, the semidiscrete finite element model is given by

$$\frac{h}{6}\begin{bmatrix} 2 & 1 & 0 \\ 1 & 4 & 1 \\ 0 & 1 & 2 \end{bmatrix}\begin{Bmatrix} \dot{U}_1 \\ \dot{U}_2 \\ \dot{U}_3 \end{Bmatrix} + \frac{1}{h}\begin{bmatrix} 1 & -1 & 0 \\ -1 & 2 & -1 \\ 0 & -1 & 1 \end{bmatrix}\begin{Bmatrix} U_1 \\ U_2 \\ U_3 \end{Bmatrix} = \begin{Bmatrix} Q_1^1 \\ Q_2^1 + Q_1^2 \\ Q_2^2 \end{Bmatrix} \tag{1}$$

where $h = L/2$. The boundary conditions are: $U_1 = 0$, $Q_2^1 + Q_1^2 = 0$, and $Q_2^2 = -\beta(U_3 - u_\infty)$. The initial conditions are $U_1 = 0, U_2 = U_3 = 1$ at $t = 0$. The condensed equations become,

$$\frac{h}{6}\begin{bmatrix} 4 & 1 \\ 1 & 2 \end{bmatrix}\begin{Bmatrix} \dot{U}_2 \\ \dot{U}_3 \end{Bmatrix} + \frac{1}{h}\begin{bmatrix} 2 & -1 \\ -1 & 1+\beta h \end{bmatrix}\begin{Bmatrix} U_2 \\ U_3 \end{Bmatrix} = \begin{Bmatrix} 0 \\ \beta u_\infty \end{Bmatrix} \tag{2}$$

♠ Using the Laplace transform method, one can obtain the solution of these equations. The Laplace transform of a function $u(t)$ is defined by

$$\mathcal{L}(u(t)) \equiv \bar{u} = \int_0^\infty e^{-st} u(t) dt \tag{3}$$

where s is the Laplace transform coordinate. The Laplace transform of $\dot{u}(t)$ is

$$\mathcal{L}(\dot{u}(t)) = s\bar{u} - u(0) \tag{4}$$

The Laplace transform of a constant is $1/s$. The Laplace transform of Eqn. (2) is

$$s[M]\{\bar{u}\} - [M]\{u(0)\} + [K]\{\bar{u}\} = \frac{1}{s}\{F\}$$

where $[M], [K]$ and $\{F\}$ are obvious from Eqn. (2). We have

$$\begin{bmatrix} \frac{2h}{3}s + \frac{2}{h} & \frac{h}{6}s - \frac{1}{h} \\ \frac{h}{6}s - \frac{1}{h} & \frac{h}{3}s + \frac{(1+\beta h)}{h} \end{bmatrix}\begin{Bmatrix} \bar{U}_2 \\ \bar{U}_3 \end{Bmatrix} = \frac{1}{s}\begin{Bmatrix} 0 \\ \beta u_\infty \end{Bmatrix} + \frac{h}{6}\begin{Bmatrix} 5 \\ 3 \end{Bmatrix} \tag{3}$$

Solving the equations, we obtain

$$\bar{U}_2 = \frac{s + c_1 + \frac{c_2}{s}}{s^2 + c_3 s + c_4} \equiv \frac{c_1}{(s-\alpha_1)(s-\alpha_2)} + \frac{s}{(s-\alpha_1)(s-\alpha_2)} + \frac{c_2}{s(s-\alpha_1)(s-\alpha_2)}$$

$$\bar{U}_3 = \frac{s + d_1 + \frac{d_2}{s}}{s^2 + c_3 s + c_4} \equiv \frac{d_1}{(s-\alpha_1)(s-\alpha_2)} + \frac{s}{(s-\alpha_1)(s-\alpha_2)} + \frac{d_2}{s(s-\alpha_1)(s-\alpha_2)}$$

where

$$c_1 = \frac{48 + 24\beta h}{7h^2},\ c_2 = \frac{36\beta u_\infty}{7h^3},\ c_3 = \frac{60 + 24\beta h}{7h^2}$$

PROPRIETARY MATERIAL. ©The McGraw-Hill Companies, Inc. All rights reserved.

$$c_4 = \frac{36 + 72\beta h}{7h^4}, \; d_1 = \frac{66 + 24\beta h u_\infty}{7h^2}, \; d_2 = \frac{72\beta u_\infty}{7h^3}$$

The inverse transform can be computed using the identities

$$\mathcal{L}^{-1}\left(\frac{1}{(s+\alpha_1)(s+\alpha_2)}\right) = \frac{1}{\alpha_2 - \alpha_1}\left(e^{-\alpha_1} - e^{-\alpha_2}\right)$$
$$\mathcal{L}^{-1}\left(\frac{s}{(s+\alpha_1)(s+\alpha_2)}\right) = \frac{1}{\alpha_1 - \alpha_2}\left(\alpha_1 e^{-\alpha_1} - \alpha_2 e^{-\alpha_2}\right)$$
$$\mathcal{L}^{-1}\left(\frac{1}{s}\right) = 1$$

Note that α_1 and α_2 are the roots of the equation

$$s^2 + \frac{12}{7h^2}(5 + 2\beta h)s + \frac{36}{7h^4}(1 + 2\beta h) = 0$$

Problem 6.18: Consider a uniform bar of cross-sectional area A, modulus of elasticity E, mass density m, and length L. The axial displacement under the action of time-dependent axial forces is governed by the wave equation

$$\frac{\partial^2 u}{\partial t^2} = a^2 \frac{\partial^2 u}{\partial x^2}, \quad a = \left(\frac{E}{m}\right)^{1/2}$$

Determine the transient response [i.e., find $u(x,t)$] of the bar when the end $x = 0$ is fixed and the end $x = L$ is subjected to a force P_0. Assume zero initial conditions. Use one linear element to approximate the spatial variation of the solution, and solve the resulting ordinary differential equation in time exactly to obtain

$$u_2(x,t) = \frac{P_0 L}{AE}\frac{x}{L}(1 - \cos\alpha t), \quad \alpha = \sqrt{3}\frac{a}{L}$$

Solution: We have ($h = L$)

$$\frac{EA}{h}\begin{bmatrix} 1 & -1 \\ -1 & 1 \end{bmatrix}\begin{Bmatrix} U_1 \\ U_2 \end{Bmatrix} + \frac{mAh}{6}\begin{bmatrix} 2 & 1 \\ 1 & 2 \end{bmatrix}\Bigg)\begin{Bmatrix} \ddot{U}_1 \\ \ddot{U}_2 \end{Bmatrix} = \begin{Bmatrix} Q_1^1 \\ Q_2^1 \end{Bmatrix}$$

The boundary conditions are: $U_1 = 0$ and $Q_2^1 = P_0$. The condensed equation and the initial conditions are,

$$\ddot{U}_2(t) + \alpha^2 U_2(t) = \frac{3P_0}{mAh}, \quad \text{I.C.: } U_2(0) = 0, \; \dot{U}_2(0) = 0$$

where $\alpha = \sqrt{3E/mh^2}$. The solution is of the form,

$$U_2(t) = A\cos\alpha t + B\sin\alpha t + C$$

PROPRIETARY MATERIAL. ©The McGraw-Hill Companies, Inc. All rights reserved.

Using the initial conditions and the governing equation, we obtain $A+C=0, B=0$, and $C=P_0h/EA$. The final solution is

$$\begin{aligned} u(x,t) &= \sum_{i=1}^{2} U_i(t)\psi_i(x) = (A\cos\alpha t + C)\psi_2(x) \\ &= \frac{P_0 h}{EA}(1-\cos\alpha t)\cdot\frac{x}{h} \end{aligned}$$

Problem 6.19: Re-solve Problem 6.18 with a mesh of two linear elements. Use the Laplace transform method to solve the two ordinary differential equations in time.

Solution: For the two element mesh, the condensed equations are ($h = L/2$)

$$\frac{EA}{h}\begin{bmatrix} 2 & -1 \\ -1 & 1 \end{bmatrix}\begin{Bmatrix} U_2 \\ U_3 \end{Bmatrix} + \frac{mAh}{6}\begin{bmatrix} 4 & 1 \\ 1 & 2 \end{bmatrix}\Bigg)\begin{Bmatrix} \ddot{U}_2 \\ \ddot{U}_3 \end{Bmatrix} = \begin{Bmatrix} 0 \\ P_0 \end{Bmatrix}$$

Taking the Laplace transform of the equations and using the homogeneous initial conditions, we obtain

$$\begin{bmatrix} 2\alpha + 4\beta s^2 & -\alpha + \beta s^2 \\ -\alpha + \beta s^2 & \alpha + 2\beta s^2 \end{bmatrix}\begin{Bmatrix} \bar{U}_2 \\ \bar{U}_3 \end{Bmatrix} = \begin{Bmatrix} 0 \\ \frac{P_0}{s} \end{Bmatrix}$$

where $\alpha = 2EA/L$ and $\beta = mAL/12$. The solution of the equations is

$$\bar{U}_2 = \frac{P_0(\alpha - \beta s^2)}{s(s^2+p^2)(s^2+q^2)},\ \bar{U}_3 = \frac{2P_0(\alpha + 2\beta s^2)}{s(s^2+p^2)(s^2+q^2)}$$

where p^2 and q^2 are the roots of the equation,

$$7\beta^2 s^4 + 10\alpha\beta s^2 - \alpha^2 = 0,\ p^2 = \frac{5+3\sqrt{2}}{7}\frac{24E}{mL^2},\ q^2 = \frac{5-3\sqrt{2}}{7}\frac{24E}{mL^2}$$

The solution for $\bar{U}_2$ and $\bar{U}_3$ can be expressed as (partial fractions),

$$\bar{U}_2 = \frac{A_1}{s} + \frac{B_1 s}{s^2+p^2} + \frac{C_1 s}{s^2+q^2},\ \bar{U}_3 = \frac{A_2}{s} + \frac{B_2 s}{s^2+p^2} + \frac{C_2 s}{s^2+q^2}$$

where

$$A_1 = \frac{P_0\alpha}{p^2q^2},\ B_1 = \frac{P_0(\alpha+\beta p^2)}{(p^4-p^2q^2)},\ C_1 = \frac{P_0(\alpha+\beta q^2)}{(q^4-p^2q^2)}$$

$$A_2 = \frac{2P_0\alpha}{p^2q^2},\ B_2 = \frac{2P_0(\alpha-2\beta p^2)}{(p^4-p^2q^2)},\ C_2 = \frac{2P_0(\alpha-2\beta q^2)}{(q^4-p^2q^2)}$$

PROPRIETARY MATERIAL. ©The McGraw-Hill Companies, Inc. All rights reserved.

The Laplace inversion gives the solution,

$$U_2(t) = A_1 + B_1 \cos pt + C_1 \cos qt,\ U_3(t) = A_2 + B_2 \cos pt + C_2 \cos qt$$

The two element finite element solution is

$$U(x,t) = U_2(t)\frac{2x}{L}, \quad \text{for} \quad 0 \le x \le \frac{L}{2}$$

$$U(x,t) = U_2(t)(2 - \frac{2x}{L}) + U_3(t)(\frac{2x}{L} - 1), \quad \text{for} \quad \frac{L}{2} \le x \le L$$

Problem 6.20: Solve Problem 6.18 when the right end is subjected to an axial force F_0 and supported by an axial spring of stiffness k.

Solution: The procedure is the same as in Problem 6.18, except for the boundary condition, $Q_2^1 = F_0 - kU_2$. The solution for $U_2(t)$ is given by (see Problem 6.18)

$$U_2(t) = c(1 - \cos \beta t),\ c = \frac{3F_0}{mAL\beta^2},\ \beta = \sqrt{\frac{3E(1 + \frac{kh}{EA})}{mh^2}}$$

and $u(x,t) = U_2(t)(x/h)$.

Problem 6.21: A bar of length L moving with velocity v_0 strikes a spring of stiffness k. Determine the motion $u(x,t)$ from the instant when the end $x = 0$ strikes the spring. Use one linear element.

Solution: Assume that the bar is moving at a velocity v_0 to the right and impacts the spring (see Figure P6.21). We consider the motion from the instant when the bar impacts on the spring till it leaves the spring. Thus the boundary and initial conditions for the problem are:

$$EA\frac{\partial u}{\partial x} = 0 \text{ at } x = 0,\ EA\frac{\partial u}{\partial x} + ku = 0 \text{ at } x = L$$

$$u(x,0) = 0, \quad \dot{u}(x,0) = v_0$$

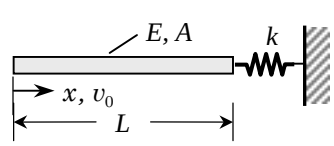

Figure P6.21

PROPRIETARY MATERIAL. ©The McGraw-Hill Companies, Inc. All rights reserved.

The one linear element mesh gives the equations

$$\frac{EA}{L}\begin{bmatrix} 1 & -1 \\ -1 & 1 \end{bmatrix}\begin{Bmatrix} U_1 \\ U_2 \end{Bmatrix} + \frac{mAL}{6}\begin{bmatrix} 2 & 1 \\ 1 & 2 \end{bmatrix}\Bigg)\begin{Bmatrix} \ddot{U}_1 \\ \ddot{U}_2 \end{Bmatrix} = \begin{Bmatrix} 0 \\ -kU_2 \end{Bmatrix}$$

Using the Laplace transform method once again, we obtain

$$\begin{bmatrix} \alpha + 2\beta s^2 & -\alpha + \beta s^2 \\ -\alpha + \beta s^2 & 1 + \alpha + 2\beta s^2 \end{bmatrix}\begin{Bmatrix} \bar{U}_1 \\ \bar{U}_2 \end{Bmatrix} = 3\beta v_0 \begin{Bmatrix} 1 \\ 1 \end{Bmatrix}$$

where $\alpha = kL/EA$ and $\beta = mL^2/6E$. The solution of these equations is

$$\bar{U}_1 = \frac{3\beta v_0(2 + \alpha + \beta s^2)}{(s^2 + p^2)(s^2 + q^2)},\ \bar{U}_2 = \frac{3\beta v_0(2 + \beta s^2)}{(s^2 + p^2)(s^2 + q^2)}$$

or

$$\bar{U}_1 = \frac{A_1}{s^2 + p^2} + \frac{B_1}{s^2 + q^2},\ \bar{U}_2 = \frac{A_2}{s^2 + p^2} + \frac{B_2}{s^2 + q^2}$$

where p^2 and q^2 are the roots of the equation,

$$3\beta^2 s^4 + 2\beta(3 + \alpha)s^2 + \alpha = 0,$$

$$p^2 = \frac{(3 + \alpha) - \sqrt{\alpha^2 + 3\alpha + 9}}{3\beta},\ q^2 = \frac{(3 + \alpha) + \sqrt{\alpha^2 + 3\alpha + 9}}{3\beta}$$

and

$$A_1 = \frac{3\beta v_0(-2 + \beta p^2 - \alpha)}{p^2 - q^2},\ B_1 = \frac{3\beta v_0(2 - \beta q^2 + \alpha)}{p^2 - q^2}$$

$$A_2 = \frac{3\beta v_0(\beta p^2 - 2)}{p^2 - q^2},\ B_2 = \frac{3\beta v_0(2 - \beta q^2)}{p^2 - q^2}$$

The Laplace inversion gives the result

$$U_1(t) = \frac{A_1}{p}\sin pt + \frac{B_1}{q}\sin qt,\ U_2(t) = \frac{A_2}{p}\sin pt + \frac{B_2}{q}\sin qt$$

and the finite element solution becomes,

$$U(x,t) = U_1(t)(1 - \frac{x}{L}) + U_2(t)\frac{x}{L}, \quad \text{for} \quad 0 \le x \le L$$

Problem 6.22: A uniform rod of length L and mass m is fixed at $x = 0$ and loaded with a mass M at $x = L$. Determine the motion $u(x,t)$ of the system when the mass M is subjected to a force P_0. Use one linear element. *Answer:*

$$u_2(t) = c(1 - \cos\lambda t), \quad c = \frac{P_0 L}{AE}, \quad \lambda = \sqrt{3}\frac{a}{L}\left(\frac{3M}{AL} + m\right)^{-1}$$

PROPRIETARY MATERIAL. ©The McGraw-Hill Companies, Inc. All rights reserved.

Solution: The boundary conditions are: $U_1 = 0$ and $Q_2^1 = -M\ddot{U}_2 + P_0$. The solution is given by

$$U_2(t) = c(1 - \cos\lambda t),\ c = \frac{P_0 L}{AE},\ \lambda = \sqrt{3}\frac{E}{L}(\frac{3M}{AL} + m)^{-1}$$

Problem 6.23: The flow of liquid in a pipe, subjected to a surge-of-pressure wave (i.e., a water hammer), experiences a surge pressure p, which is governed by the equation

$$\frac{\partial^2 p}{\partial t^2} - c^2\frac{\partial^2 p}{\partial x^2} = 0, \quad c^2 = \frac{1}{m}\left(\frac{1}{k} + \frac{D}{bE}\right)^{-1}$$

where m is the mass density and K the bulk modulus of the fluid, D is the diameter and b the thickness of the pipe, and E is the modulus of elasticity of the pipe material. Determine the pressure $p(x,t)$ using one linear finite element, for the following boundary and initial conditions:

$$p(0,t) = 0, \quad \frac{\partial p}{\partial x}(L,t) = 0, \quad p(x,0) = p_0, \quad \dot{p}(x,0) = 0$$

Solution: The boundary conditions should read $p(0,t) = 0, \frac{\partial p}{\partial x}(L,t) = 0$, and the initial conditions should read $p(x,0) = p_0, \dot{p}(x,0) = 0$. We have $(h = L)$

$$\frac{c^2}{h}\begin{bmatrix} 1 & -1 \\ -1 & 1 \end{bmatrix}\begin{Bmatrix} U_1 \\ U_2 \end{Bmatrix} + \frac{h}{6}\begin{bmatrix} 2 & 1 \\ 1 & 2 \end{bmatrix}\begin{Bmatrix} \ddot{U}_1 \\ \ddot{U}_2 \end{Bmatrix} = \begin{Bmatrix} Q_1^1 \\ Q_2^1 \end{Bmatrix}$$

The boundary conditions are: $U_1 = 0$ and $Q_2^1 = 0$. The condensed equation and the initial conditions are,

$$\ddot{U}_2(t) + \alpha^2 U_2(t) = 0, \quad \text{I.C.: } U_2(0) = p_0,\ \dot{U}_2(0) = 0$$

where $\alpha = \sqrt{3}\ c/h$. The solution is of the form,

$$U_2(t) = A\cos\alpha t + B\sin\alpha t + C$$

Using the initial conditions of the governing equation, we obtain $A + C = p_0, B = 0$, and $C = 0$. The final solution is

$$\begin{aligned} u(x,t) &= \sum_{i=1}^{2} U_i(t)\psi_i(x) = A\cos\alpha t\psi_2(x) \\ &= p_0\cos\alpha t \cdot \frac{x}{h} \end{aligned}$$

PROPRIETARY MATERIAL. ©The McGraw-Hill Companies, Inc. All rights reserved.

Problem 6.24: Consider the problem of determining the temperature distribution of a solid cylinder, initially at a uniform temperature T_0 and cooled in a medium of zero temperature (i.e., $T_\infty = 0$). The governing equation of the problem is

$$\rho c \frac{\partial T}{\partial t} - \frac{1}{r}\frac{\partial}{\partial r}\left(rk\frac{\partial T}{\partial r}\right) = 0$$

The boundary conditions are

$$\frac{\partial T}{\partial r}(0,t) = 0, \quad \left(rk\frac{\partial T}{\partial r} + \beta T\right)\bigg|_{r=R} = 0$$

The initial condition is $T(r,t) = T_0$. Determine the temperature distribution $T(r,t)$ using one linear element. Take $R = 2.5$ cm, $T_0 = 130°$C, $k = 215$ W/(m °C), $\beta = 525$ W/(m °C), $\rho = 2700$ kg/m^2, and $c = 0.9$ kJ/(kg°C). What is the heat loss at the surface? Formulate the problem.

Solution: We will not solve the problem but only formulate it. The finite element model is given by

$$[M^e]\{\dot{u}^e\} + [K^e]\{u^e\} = \{Q^e\} \tag{2}$$

where

$$K^e_{ij} = 2\pi \int_{r_A}^{r_B} rk\frac{d\psi_i}{dr}\frac{d\psi_j}{dr}\, dr$$

$$M^e_{ij} = 2\pi \int_{r_A}^{r_B} \rho c r \psi_i \psi_j\, dr$$

The matrix $[K^e]$ for a linear element is given at the bottom of page 104 of the text book. We need to evaluate $[M^e]$. For a linear element, we obtain

$$[M^e] = \frac{2\pi\rho c h}{12}\begin{bmatrix} h + 4r_A & h + 2r_A \\ h + 2r_A & 3h + 4r_A \end{bmatrix}$$

The boundary conditions are: $Q^1_1 = 0$ and $Q^1_2 = -2\pi\beta U_2$. The one element mesh ($h = R$) gives the equations ($r_A = 0$ for Element 1)

$$\pi k \begin{bmatrix} 1 & -1 \\ -1 & 1 + 2\beta \end{bmatrix}\begin{Bmatrix} U_1 \\ U_2 \end{Bmatrix} + \frac{2\pi\rho c h}{12}\begin{bmatrix} h & h \\ h & 3h \end{bmatrix}\begin{Bmatrix} \dot{U}_1 \\ \dot{U}_2 \end{Bmatrix} = \begin{Bmatrix} 0 \\ 0 \end{Bmatrix}$$

The equations can be solved using the Laplace transform method.

Problem 6.25: Determine the nondimensional temperature $\theta(r,t)$ in the region bounded by two long cylindrical surfaces of radii R_1 and R_2. The dimensionless heat conduction equation is

$$-\frac{1}{r}\frac{\partial}{\partial r}\left(r\frac{\partial \theta}{\partial r}\right) + \frac{\partial \theta}{\partial t} = 0$$

PROPRIETARY MATERIAL. ©The McGraw-Hill Companies, Inc. All rights reserved.

with boundary and initial conditions

$$\frac{\partial\theta}{\partial r}(R_1,t)=0,\quad \theta(R_2,t)=1,\quad \theta(r,0)=0$$

Solution: The boundary conditions are: $Q_1^1=0$ and $U_2=1$. The one element mesh ($h=R_2-R_1$) gives the equations ($r_A=R_1$ for Element 1; see Problem 6.21)

$$\frac{\pi(R_1+R_2)}{h}\begin{bmatrix}1 & -1\\ -1 & 1\end{bmatrix}\begin{Bmatrix}U_1\\ U_2\end{Bmatrix}+\frac{2\pi}{12}\begin{bmatrix}h+4R_1 & h+2R_1\\ h+2R_1 & 3h+4R_1\end{bmatrix}\begin{Bmatrix}\dot{U}_1\\ \dot{U}_2\end{Bmatrix}=\begin{Bmatrix}0\\ Q_2^1\end{Bmatrix}$$

The condensed equation is

$$\frac{\pi(R_1+R_2)}{h}U_1+\frac{2\pi(h+4R_1)}{12}\dot{U}_1=\frac{\pi(R_1+R_2)}{h}$$

The solution to the equation is of the form, $U_1=Ae^{-\alpha t}+B$, where $\alpha=[\pi(R_1+R_2)/h]/[12\pi(h+4R_1)/12]$, and A and B are constants to be determined from the initial condition and the governing equation for U_1. We obtain, $A+B=0$ and $B=1$. The solution becomes,

$$u(r,t)=U_1(t)\psi_1(r)+U_2(t)\psi_2(r)=\left(1-e^{-\alpha t}\right)\left(1-\frac{r}{h}\right)+\frac{r}{h}$$

Problem 6.26: Show that (6.2.28a,b) and (6.2.29a,b) can be expressed in the alternative form to Eq. (6.2.38)

$$[H]\{\ddot{u}\}_{s+1}=\{\tilde{F}\}_{s+1}$$

and define $[H]$ and $\{\tilde{F}\}_{s+1}$.

Solution: Consider the equations (6.44) and (6.45),

$$[M]\{\ddot{u}\}+[K]\{u\}=\{F\} \tag{1}$$

$$\{u\}_{s+1}=\{u\}_s+\Delta t\{\dot{u}\}_s+\frac{(\Delta t)^2}{2}\left[(1-2\beta)\{\ddot{u}\}_s+2\beta\{\ddot{u}\}_{s+1}\right] \tag{2}$$

Premultiplying Eq. (2) with $[K]_{s+1}$ and substituting for $[K]_{s+1}\{u\}_{s+1}$ from Eq. (1), we obtain the result,

$$[H]_{s+1}\{\ddot{u}\}_{s+1}=\{F\}_{s+1}-[K]_{s+1}\{b\}_s \tag{3}$$

PROPRIETARY MATERIAL. ©The McGraw-Hill Companies, Inc. All rights reserved.

Problem 6.27: A uniform cantilever beam of length L, moment of inertia I, modulus of elasticity E, and mass m begins to vibrate with initial displacement

$$w(x,0) = w_0 x^2/L^2$$

and zero initial velocity. Find its displacement at the free end at any subsequent time. Use one Euler-Bernoulli beam element to determine the solution. Solve the resulting differential equations in time using the Laplace transform method.

Solution: *Euler–Bernoulli Beam Element.* For one element mesh ($h = L$), we have

$$\frac{2EI}{h^3}\begin{bmatrix} 6 & -3h & -6 & -3h \\ -3h & 2h^2 & 3h & h^2 \\ -6 & 3h & 6 & 3h \\ -3h & h^2 & 3h & 2h^2 \end{bmatrix}\begin{Bmatrix} U_1 \\ U_2 \\ U_3 \\ U_4 \end{Bmatrix}$$

$$+\frac{\rho Ah}{420}\begin{bmatrix} 156 & -22h & 54 & 13h \\ -22h & 4h^2 & -13h & -3h^2 \\ 54 & -13h & 156 & 22h \\ 13h & -3h^2 & 22h & 2h^2 \end{bmatrix}\begin{Bmatrix} \ddot{U}_1 \\ \ddot{U}_2 \\ \ddot{U}_3 \\ \ddot{U}_4 \end{Bmatrix} = \begin{Bmatrix} Q_1^1 \\ Q_2^1 \\ Q_3^1 \\ Q_4^1 \end{Bmatrix} \tag{1}$$

The boundary conditions require $U_1 = U_2 = 0,\ Q_3^1 = Q_4^1 = 0$. The initial conditions are $U_3 = w_0, U_4 = 2w_0/L, \dot{U}_3 = 0$ and $\dot{U}_4 = 0$. The condensed equations are:

$$\frac{2EI}{h^3}\begin{bmatrix} 6 & 3h \\ 3h & 2h^2 \end{bmatrix}\begin{Bmatrix} U_3 \\ U_4 \end{Bmatrix} + \frac{mAh}{420}\begin{bmatrix} 156 & 22h \\ 22h & 2h^2 \end{bmatrix}\begin{Bmatrix} \ddot{U}_3 \\ \ddot{U}_4 \end{Bmatrix} = \begin{Bmatrix} 0 \\ 0 \end{Bmatrix} \tag{2}$$

which can be solved using the Laplace transform method.

Problem 6.28: Re-solve Problem 6.27 using one Timoshenko beam element.

Solution: For one element mesh, the condensed equations are

$$\frac{GAK_s}{4h}\begin{bmatrix} 4 & 2h \\ 2h & h^2+\alpha \end{bmatrix}\begin{Bmatrix} U_3 \\ U_4 \end{Bmatrix} + \frac{mh}{6}\begin{bmatrix} 2A & 0 \\ 0 & 2I \end{bmatrix}\begin{Bmatrix} \ddot{U}_3 \\ \ddot{U}_4 \end{Bmatrix} = \begin{Bmatrix} 0 \\ 0 \end{Bmatrix}$$

where $\alpha = \frac{4EI}{GAK_s}$.

PROPRIETARY MATERIAL. ©The McGraw-Hill Companies, Inc. All rights reserved.

PROPRIETARY AND CONFIDENTIAL

This Manual is the proprietary property of The McGraw-Hill Companies, Inc. ("McGraw-Hill") and protected by copyright and other state and federal laws. By opening and using this Manual the user agrees to the following restrictions, and if the recipient does not agree to these restrictions, the Manual should be promptly returned unopened to McGraw-Hill: **This Manual is being provided only to authorized professors and instructors for use in preparing for the classes using the affiliated textbook. No other use or distribution of this Manual is permitted. This Manual may not be sold and may not be distributed to or used by any student or other third party. No part of this Manual may be reproduced, displayed or distributed in any form or by any means, electronic or otherwise, without the prior written permission of the McGraw-Hill.**

Chapter 7

COMPUTER IMPLEMENTATION

In Problems 7.1–7.4, compute the matrix coefficients using (a) the Newton–Cotes integration formula and (b) the Gauss–Legendre quadrature. Use the appropriate number of integration points, and verify the results with those obtained by the exact integration.

Problem 7.1: Evaluate the integrals in Example 7.1.1 using the Newton–Cotes and Gauss quadratures when ψ_i are the quadratic interpolation functions

$$\psi_1 = \left(1 - \frac{x - x_a}{x_b - x_a}\right)\left(1 - 2\frac{x - x_a}{x_b - x_a}\right) = -\frac{1}{2}\xi(1-\xi)$$
$$\psi_2 = 4\left(\frac{x - x_a}{x_b - x_a}\right)\left(1 - \frac{x - x_a}{x_b - x_a}\right) = (1-\xi^2)$$
$$\psi_3 = -\frac{x - x_a}{x_b - x_a}\left(1 - 2\frac{x - x_a}{x_b - x_a}\right) = \frac{1}{2}\xi(1+\xi)$$

Solution: Note that the integrand $F(x)$ in the integral of K_{12} is a cubic polynomial (i.e., the degree is $r = 3$). Hence, we expect the three-point Newtone–Cotes or two-point Gauss quadrature to yield the exact value. On the other hand, the integrand of G_{12} is a fifth-order polynomial (i.e., the degree is $r = 5$). Hence, we expect the five-point Newtone–Cotes or three-point Gauss quadrature to yield the exact value. The exact values are

$$K_{12} = -\frac{2}{3(x_b - x_a)}\left(4x_0 + 3x_a + x_b\right), \quad G_{12} = \frac{x_b - x_a}{15}\left(x_0 + x_a\right)$$

For convenience of using the Gauss quadrature, we write the given integrals in terms of the normalized coordinate ξ:

$$K_{12} = \int_{x_a}^{x_b}(x_0 + x)\frac{d\psi_1}{dx}\frac{d\psi_2}{dx}dx = \frac{2}{x_b - x_a}\int_{-1}^{1}[x_0 + x(\xi)]\frac{d\psi_1}{d\xi}\frac{d\psi_2}{d\xi}\,d\xi$$
$$= \frac{2}{x_b - x_a}\int_{-1}^{1}\left[x_0 + x_a + \frac{x_b - x_a}{2}(1+\xi)\right]\left(\xi - 2\xi^2\right)d\xi$$

PROPRIETARY MATERIAL. ©The McGraw-Hill Companies, Inc. All rights reserved.

$$G_{12} = \int_{x_a}^{x_b} (x_0 + x)\psi_1\psi_2 \; dx = \frac{x_b - x_a}{2} \int_{-1}^{1} [x_0 + x(\xi)]\psi_1(\xi)\psi_2(\xi) \; d\xi$$
$$= -\frac{x_b - x_a}{4} \int_{-1}^{1} \left[x_0 + x_a + \frac{x_b - x_a}{2}(1+\xi)\right] \left(\xi - \xi^2\right) \left(1 - \xi^2\right) d\xi$$

(a) *Newton–Cotes Quadrature:* We evaluate K_{12} using $r = 3$; we have $\xi_1 = -1$, $\xi_2 = 0.0$, $\xi_3 = 1$, $w_1 = w_3 = \frac{1}{6}$, $w_2 = \frac{4}{6}$, and

$$K_{12} = 2 \cdot \frac{2}{x_b - x_a} \left[-3(x_0 + x_a)\frac{1}{6} + 0 \cdot \frac{4}{6} - (x_0 + x_b)\frac{1}{6}\right]$$
$$= -\frac{2}{3(x_b - x_a)} \left(4x_0 + 3x_a + x_b\right)$$

We evaluate G_{12} using $r = 5$; we have $\xi_1 = -1$, $\xi_2 = -0.5$, $\xi_3 = 0.0$, $\xi_4 = 0.5$, $\xi_5 = 1.0$, $w_1 = w_5 = \frac{7}{90}$, $w_2 = w_4 = \frac{32}{90}$, $w_3 = \frac{12}{90}$, and

$$G_{12} = -2 \cdot \frac{x_b - x_a}{4} \left[0 \cdot \frac{7}{90} + (x_0 + x_a + \frac{x_b - x_a}{2}(0.5))(-\frac{1}{2} - \frac{1}{4})(1 - \frac{1}{4}) \cdot \frac{32}{90}\right.$$
$$\left. + 0 \cdot \frac{12}{90} + (x_0 + x_a + \frac{x_b - x_a}{2}(1.5))(\frac{1}{2} - \frac{1}{4})(1 - \frac{1}{4}) \cdot \frac{32}{90} + 0 \cdot \frac{7}{90}\right]$$
$$= \frac{x_b - x_a}{15} \left(x_0 + x_a\right)$$

(b) *Gauss–Legendre Quadrature:* To evaluate K_{12}, we use $r = 2$; we have $\xi_1 = -0.57735 = -\frac{1}{\sqrt{3}}$, $\xi_2 = 0.57735 = \frac{1}{\sqrt{3}}$, $w_1 = w_3 = 1$ and

$$K_{12} = \frac{2}{x_b - x_a} \left\{ \left[x_0 + x_a + \frac{x_b - x_a}{2}(1 - \frac{1}{\sqrt{3}})\right] (-\frac{1}{\sqrt{3}} - \frac{2}{3}) \right.$$
$$\left. + \left[x_0 + x_a + \frac{x_b - x_a}{2}(1 + \frac{1}{\sqrt{3}})\right] (\frac{1}{\sqrt{3}} - \frac{2}{3}) \right\}$$
$$= -\frac{2}{3(x_b - x_a)} \left(4x_0 + 3x_a + x_b\right)$$

To evaluate G_{12} we use $r = 3$; we have $\xi_1 = -0.77459 = -\sqrt{\frac{3}{5}}$, $\xi_2 = 0.0$, $\xi_3 = 0.77459 = \sqrt{\frac{3}{5}}$, $w_1 = w_3 = 0.55555 = \frac{5}{9}$, $w_2 = 0.88888$, and

$$G_{12} = -\frac{x_b - x_a}{4} \left\{ \left[x_0 + x_a + \frac{x_b - x_a}{2}(1 - a)\right] (-a - a^2)(1 - a^2) \cdot w + 0 \cdot w_2 \right.$$
$$\left. + \left[x_0 + x_a + \frac{x_b - x_a}{2}(1 + a)\right] (a - a^2)(1 - a^2) \cdot w \right\}$$
$$= \frac{x_b - x_a}{2} a^2 (1 - a^2) \left(x_0 + x_a\right) w$$

PROPRIETARY MATERIAL. ©The McGraw-Hill Companies, Inc. All rights reserved.

where $a = \sqrt{\frac{3}{5}}$ and $w = \frac{5}{9}$. Substitution of these values gives the result (which is equal to the exact value).

Problem 7.2: Use Newton–Cotes integration formulas to evaluate

$$K_{11} = \int_{x_a}^{x_b} \left(\frac{d^2\phi_1}{dx^2}\right)^2 dx, \quad G_{11} = \int_{x_a}^{x_b} (\phi_1)^2 \, dx$$

where ϕ_i are the Hermite cubic interpolation functions [see Eq. (5.2.12) and (5.2.13a,b)].

Solution: From Eqs. (5.2.12) and (5.2.13b) we have

$$\phi_1^e = 1 - 3\left(\frac{\bar{x}}{h_e}\right)^2 + 2\left(\frac{\bar{x}}{h_e}\right)^3, \quad \frac{d^2\phi_1^e}{d\bar{x}^2} = -\frac{6}{h_e^2}\left(1 - 2\frac{\bar{x}}{h_e}\right)$$

Then for $r = 1$ ($\bar{x}_1 = h_e/2$, $w_1 = 1$) we have

$$K_{11} = \int_0^{h_e} \left(\frac{d^2\phi_1}{d\bar{x}^2}\right)^2 d\bar{x} = h_e \frac{36}{h_e^4}\left[\left(1 - 2\frac{\bar{x}}{h_e}\right)^2\right]_{\bar{x}=0.5h_e} = 0$$

$$G_{11} = \int_0^{h_e} (\phi_1)^2 \, d\bar{x} = h_e \left[1 - 3\left(\frac{\bar{x}}{h_e}\right)^2 + 2\left(\frac{\bar{x}}{h_e}\right)^3\right]^2_{\bar{x}=0.5h_e} = 0.25h_e$$

In the same way we can evaluate the integrals for different number of integration points. The values of the coefficients as evaluated for different number (r) of integration points are:

$$\begin{aligned}
r = 1: &\quad K_{11} = 0.0, \quad G_{11} = \frac{h_e}{4} \\
r = 2: &\quad K_{11} = \frac{12}{h_e^3} \ \text{(exact)}, \quad G_{11} = 0.398148h_e \\
r = 3: &\quad G_{11} = 0.37h_e \\
r = 4: &\quad G_{11} = 0.371429h_e [= \frac{13h_e}{35}] \ \text{(exact)}
\end{aligned}$$

Problem 7.3: Use Gauss quadrature to evaluate the integrals of Problem 7.2 for the case in which the interpolation functions ϕ_i are the fifth-order Hermite polynomials of Problem 5.4.

Solution: First note that [$\bar{x} = (1+\xi)h/2$]

$$\phi_1 = 1 - 10\frac{\bar{x}^3}{h^3} + 15\frac{\bar{x}^4}{h^4} - 6\frac{\bar{x}^5}{h^5} = 1 - \frac{5}{4}(1+\xi)^3 + \frac{15}{16}(1+\xi)^4 - \frac{3}{16}(1+\xi)^5$$

$$\frac{d^2\phi_i}{dx^2} = \frac{4}{h_e^2}\frac{d^2\phi_i}{d\xi^2}, \quad \frac{d^2\phi_1}{d\xi^2} = -\frac{15}{2}(1+\xi) + \frac{45}{4}(1+\xi)^2 - \frac{15}{4}(1+\xi)^3$$

PROPRIETARY MATERIAL. ©The McGraw-Hill Companies, Inc. All rights reserved.

We have

$$
\begin{aligned}
K_{11} &= \frac{2}{h_e^3}\int_{-1}^{+1}\left(\frac{d^2\phi_1}{d\xi^2}\right)^2 d\xi \\
&= \frac{2}{h_e^3}\int_{-1}^{+1}\left[-\frac{15}{2}(1+\xi)+\frac{45}{4}(1+\xi)^2-\frac{15}{4}(1+\xi)^3\right]^2 d\xi
\end{aligned}
$$

Thus, K_{11} is a sixth-order polynomial of ξ. Hence, it can be evaluated exactly by using $N = [(6+1)/2] = 4$:

$$
K_{12} = \frac{2}{h_e^3}\sum_{I=1}^{4} W_I\left[-\frac{15}{2}(1+\xi_I)+\frac{45}{4}(1+\xi_I)^2-\frac{15}{4}(1+\xi_I)^3\right]^2
$$

Similarly,

$$
G_{11} = \int_0^{h_e}(\phi_1)^2\, d\bar{x} = \frac{h_e}{2}\int_{-1}^{+1}\left[1-\frac{5}{4}(1+\xi)^3+\frac{15}{16}(1+\xi)^4-\frac{3}{16}(1+\xi)^5\right]^2 d\xi
$$

which is a tenth degree polynomial in ξ; hence, $N = [(10+1)/2] = 6$. We have

$$
G_{11} = \frac{h_e}{2}\sum_{I=1}^{6}\left[1-\frac{5}{4}(1+\xi_I)^3+\frac{15}{16}(1+\xi_I)^4-\frac{3}{16}(1+\xi_I)^5\right]^2
$$

The values obtained (with the help of *Maple* or *Matlab* programs) using the Gauss quadrature are (exact)

$$
K_{11} = \frac{120}{7h_e^3}\ , \qquad G_{11} = \frac{181h_e}{462}
$$

Problem 7.4: Repeat Problem 7.3 for the case in which the interpolation functions ϕ_i are the fifth-order Hermite polynomials of Problem 5.5.

Solution: The interpolation function ϕ_1 and its second derivative are $[\bar{x} = (1+\xi)h/2]$

$$
\begin{aligned}
\phi_1 &= 1-23\frac{\bar{x}^2}{h^2}+66\frac{\bar{x}^3}{h^3}-68\frac{\bar{x}^4}{h^4}+24\frac{\bar{x}^5}{h^5} \\
&= 1-\frac{23}{4}(1+\xi)^2+\frac{33}{4}(1+\xi)^3-\frac{17}{4}(1+\xi)^4+\frac{3}{4}(1+\xi)^5 \\
\frac{d^2\phi_1}{d\xi^2} &= -\frac{23}{2}+\frac{99}{2}(1+\xi)-51(1+\xi)^2+15(1+\xi)^3
\end{aligned}
$$

PROPRIETARY MATERIAL. ©The McGraw-Hill Companies, Inc. All rights reserved.

We have

$$K_{11} = \frac{2}{h_e^3}\int_{-1}^{+1}\left[-\frac{23}{2}+\frac{99}{2}(1+\xi)-51(1+\xi)^2+15(1+\xi)^3\right]^2 d\xi$$
$$= \frac{2}{h_e^3}\sum_{I=1}^{4} W_I\left[-\frac{23}{2}+\frac{99}{2}(1+\xi_I)-51(1+\xi_I)^2+15(1+\xi_I)^3\right]^2$$

Similarly,

$$G_{11} = \frac{h_e}{2}\int_{-1}^{+1}\left[1-\frac{23}{4}(1+\xi)^2+\frac{33}{4}(1+\xi)^3-\frac{17}{4}(1+\xi)^4+\frac{3}{4}(1+\xi)^5\right]^2 d\xi$$
$$= \frac{h_e}{2}\sum_{I=1}^{6}\left[1-\frac{23}{4}(1+\xi_I)^2+\frac{33}{4}(1+\xi_I)^3-\frac{17}{4}(1+\xi_I)^4+\frac{3}{4}(1+\xi_I)^5\right]^2$$

The values obtained using the Gauss quadrature are (exact)

$$K_{11} = \frac{5092}{35h_e^3}\ , \qquad G_{11} = \frac{523h_e}{3465}$$

Problem 7.5: Solve the problem

$$-\frac{d}{dx}\left(k\frac{dT}{dx}\right) = g_0$$

$$\left(-k\frac{dT}{dx}\right)_{x=0} = Q_0, \quad \left[k\frac{dT}{dx}+\beta(T-T_\infty)\right]_{x=L} = 0$$

using two and four linear elements. Compare the results with the exact solution. Use the following data: $L = 0.02$ m, $k = 20$ W/(m °C), $g_0 = 10^6$ W/m^2, $Q_0 = 10^2$W, $T_\infty = 50$°C, $\beta = 500$ W/(m °)C.

Solution: For this problem, we have MODEL = 1, NTYPE = 0, and ITEM = 0 (for a steady-state solution). Since $a = k$, $c = 0$ and $f = g_0$ are the same for all elements, we set ICONT = 1, AX0 = 20.0, and FX0=1.0E6. All other coefficients are zero for this problem. For a uniform mesh of two linear elements (NEM = 2, IELEM = 1), the increments DX(I) are [DX(1) is always the x-coordinate of node 1; $h = L/2 = 0.02/2 = 0.01$]:

$$\{\text{DX}\} = \{0.0,\ 0.01,\ 0.01\}$$

The boundary conditions of the problem are

$$Q_1^1 = Q_0, \quad Q_2^2 = -\beta(T_3 - T_\infty)$$

PROPRIETARY MATERIAL. ©The McGraw-Hill Companies, Inc. All rights reserved.

There are no specified boundary conditions on the primary variable (NSPV=0) and one specified non-zero boundary condition on the secondary variable (NSSV=1) and the specified value is VSSV(1)=100. There is one mixed boundary condition (NNBC=1) and the specified values are VNBC(1) ($=\beta$)=500 and TINF=50.0. The complete input data required to analyze the problem using FEM1D are presented in Box P7.5.1 and the output file is presented in Box 7.5.2. Input data and partial output for the same problem for a mesh of four linear elements are presented in Box P7.5.3.

Box P7.5.1: Input file from FEM1D for Problem 7.5.

```
Prob 7.5(a): Heat transfer problem with mixed boundary condition
   1  0  0                  MODEL, NTYPE, ITEM
   1  2                     IELEM, NEM
   1  1                     ICONT, NPRNT
   0.0    0.01  0.01        DX(1)=X0; DX(2), DX(3)= Ele. lengths
  20.0    0.0               AX0,  AX1
   0.0    0.0               BX0,  BX1
   0.0    0.0               CX0, CX1
   1.0E6  0.0   0.0         FX0, FX1, FX2
   0                        NSPV
   1                         NSSV
   1  1   1.0E2             ISSV(1,1), ISSV(1,2), VSSV(1)
   1                        NNBC
   3  1   500.0   50.0      INBC(1,1),INBC(1,2), VNBC(1),TINF
   0                        NMPC
```

Box P7.5.2: Edited output from FEM1D for Problem 7.5.

```
SOLUTION (values of PVs) at the NODES:

   0.10030E+03  0.97750E+02  0.90200E+02

        X       P. Variable  S. Variable

   0.00000E+00  0.10030E+03 -0.51000E+04
   0.25000E-02  0.99662E+02 -0.51000E+04
   0.50000E-02  0.99025E+02 -0.51000E+04
   0.75000E-02  0.98388E+02 -0.51000E+04
   0.10000E-01  0.97750E+02 -0.51000E+04
   0.10000E-01  0.97750E+02 -0.15100E+05
   0.12500E-01  0.95862E+02 -0.15100E+05
   0.15000E-01  0.93975E+02 -0.15100E+05
   0.17500E-01  0.92088E+02 -0.15100E+05
   0.20000E-01  0.90200E+02 -0.15100E+05
```

PROPRIETARY MATERIAL. ©The McGraw-Hill Companies, Inc. All rights reserved.

Box P7.5.3: Input and partial output for 4 linear elements.

```
Prob 7.5(b): Heat transfer problem with mixed boundary condition
   1  0  0                 MODEL, NTYPE, ITEM
   1  4                    IELEM, NEM
   1  1                    ICONT, NPRNT
   0.0 0.005 0.005 0.005 0.005           DX(I)
  20.0    0.0              AX0,  AX1
   0.0    0.0              BX0,  BX1
   0.0    0.0              CX0, CX1
   1.0E6  0.0   0.0        FX0, FX1, FX2
   0                       NSPV
   1                       NSSV
   1  1   1.0E2            ISSV(1,1), ISSV(1,2), VSSV(1)
   1                       NNBC
   5  1   500.0   50.0     INBC(1,1),INBC(1,2), VNBC(1),TINF
   0                       NMPC
```

```
 SOLUTION (values of PVs) at the NODES:

 0.10030E+03  0.99650E+02  0.97750E+02  0.94600E+02  0.90200E+02
```

X	P. Variable	S. Variable
0.00000E+00	0.10030E+03	-0.26000E+04
0.25000E-02	0.99975E+02	-0.26000E+04
0.50000E-02	0.99650E+02	-0.26000E+04
0.50000E-02	0.99650E+02	-0.76000E+04
0.75000E-02	0.98700E+02	-0.76000E+04
0.10000E-01	0.97750E+02	-0.76000E+04
0.10000E-01	0.97750E+02	-0.12600E+05
0.12500E-01	0.96175E+02	-0.12600E+05
0.15000E-01	0.94600E+02	-0.12600E+05
0.15000E-01	0.94600E+02	-0.17600E+05
0.17500E-01	0.92400E+02	-0.17600E+05
0.20000E-01	0.90200E+02	-0.17600E+05

The nodal values of temperature coincide with the exact solution

$$T(x) = \frac{g_0 L^2}{2k}\left(1 + \frac{2k}{\beta L} - \frac{x^2}{L^2}\right) + \frac{q_0 L}{k}\left(1 + \frac{k}{\beta L} - \frac{x}{L}\right) + T_\infty$$

$$-k\frac{dT}{dx} = g_0 x + q_0$$

However, the flux values coincide with the exact only at the center of the elements.

PROPRIETARY MATERIAL. ©The McGraw-Hill Companies, Inc. All rights reserved.

Problem 7.6: Solve Problem 7.5 using two quadratic elements.

Solution: For a uniform mesh of two quadratic elements (NEM = 2, IELEM = 2), the increments DX(I) are $\{DX\} = \{0.0,\ 0.01,\ 0.01\}$. All other data remain the same. The complete input data and partial output for the problem are presented in Box P7.6. Note that the temperatures as well as the flux coincide with the exact solution at the nodes.

Box P7.6: Input and partial output for 2 quadratic elements.

```
Prob 7.6: Heat transfer problem with mixed boundary condition
   1  0  0                 MODEL, NTYPE, ITEM
   2  2                    IELEM, NEM
   1  1                    ICONT, NPRNT
   0.0 0.01 0.01           DX(I)
  20.0    0.0              AX0,  AX1
   0.0    0.0              BX0,  BX1
   0.0    0.0              CX0, CX1
   1.0E6  0.0   0.0        FX0, FX1, FX2
   0                       NSPV
   1                       NSSV
   1  1   1.0E2            ISSV(1,1), ISSV(1,2), VSSV(1)
   1                       NNBC
   5  1   500.0   50.0     INBC(1,1),INBC(1,2), VNBC(1),TINF
   0                       NMPC
```

```
SOLUTION (values of PVs) at the NODES:

0.10030E+03  0.99650E+02  0.97750E+02  0.94600E+02  0.90200E+02
```

X	P. Variable	S. Variable
0.00000E+00	0.10030E+03	-0.10000E+03
0.12500E-02	0.10025E+03	-0.13500E+04
0.25000E-02	0.10013E+03	-0.26000E+04
0.37500E-02	0.99930E+02	-0.38500E+04
0.50000E-02	0.99650E+02	-0.51000E+04
0.62500E-02	0.99292E+02	-0.63500E+04
0.75000E-02	0.98856E+02	-0.76000E+04
0.87500E-02	0.98342E+02	-0.88500E+04
0.10000E-01	0.97750E+02	-0.10100E+05
0.10000E-01	0.97750E+02	-0.10100E+05
0.11250E-01	0.97080E+02	-0.11350E+05
0.12500E-01	0.96331E+02	-0.12600E+05
0.13750E-01	0.95505E+02	-0.13850E+05
0.15000E-01	0.94600E+02	-0.15100E+05
0.16250E-01	0.93617E+02	-0.16350E+05
0.17500E-01	0.92556E+02	-0.17600E+05
0.18750E-01	0.91417E+02	-0.18850E+05
0.20000E-01	0.90200E+02	-0.20100E+05

PROPRIETARY MATERIAL. ©The McGraw-Hill Companies, Inc. All rights reserved.

Problem 7.7: Solve the heat transfer problem in Example 4.3.3 (set 1), using (a) four linear elements and (b) two quadratic elements (see Table 4.3.1).

Solution: For this problem, we have MODEL = 1, NTYPE = 0, and ITEM = 0. Since $a = k = 1$, $c = m^2$ and $f = 0$ are the same for all elements, we set ICONT = 1, AX0 = 1.0, and CX0=1.0E6. All other coefficients are zero for this problem. For a uniform mesh of four linear elements (NEM = 4, IELEM = 1), the increments DX(I) are ($h = L/4 = 0.05/4 = 0.0125$): $\{\text{DX}\} = \{0.0,\ 0.0125,\ 0.0125,\ 0.0125,\ 0.0125\}$.

The boundary conditions of the problem are $U_1 = 300$, $Q_2^4 = 0$. There is one specified boundary condition on primry variables (NSPV=1) and no specified boundary conditions on the secondary variable with non-zero values (NSSV=0). There are no mixed boundary conditions (NNBC=0). The input data and partial output for a mesh of two quadratic elements are presented in Box P7.7. The finite element solution coincides with the exact solution at the nodes.

Box P7.7: Input and partial output for 2 quadratic elements.

```
Prob 7.7: Heat transfer problem of Example 4.3.3
   1  0  0                 MODEL, NTYPE, ITEM
   2  2                    IELEM, NEM
   1  0                    ICONT, NPRNT
   0.0 0.025 0.025         DX(I)
   1.0    0.0              AX0,  AX1
   0.0    0.0              BX0,  BX1
 400.0    0.0              CX0, CX1
   0.0    0.0   0.0        FX0, FX1, FX2
   1                       NSPV
   1  1   3.0E2            ISPV(1,1), ISPV(1,2), VSPV(1)
   0                       NSSV
   0                       NNBC
   0                       NMPC
```

```
SOLUTION (values of PVs) at the NODES:
0.30000E+03  0.25170E+03  0.21923E+03  0.20052E+03  0.19442E+03
```

x	P. Variable	S. Variable
0.00000E+00	0.30000E+03	-0.44971E+04
0.12500E-01	0.25170E+03	-0.32306E+04
0.25000E-01	0.21923E+03	-0.19642E+04
0.25000E-01	0.21923E+03	-0.20014E+04
0.37500E-01	0.20052E+03	-0.99245E+03
0.50000E-01	0.19442E+03	0.16472E+02

PROPRIETARY MATERIAL. ©The McGraw-Hill Companies, Inc. All rights reserved.

Problem 7.8: Solve the axisymmetric problem in Example 4.3.4 using four quadratic elements and compare the solution with that obtained using eight linear elements and the exact solution of Table 4.3.2.

Solution: For this problem, we have MODEL = 1, NTYPE = 0, and ITEM = 0. We note that for axisymmetric problems, the whole equation is multiplied with r. Therefore, $a = k \cdot r$, and $f = g_0 \cdot r$ for all elements. Thus, we set ICONT = 1, AX1 = k, and FX1= g_0. All other coefficients are zero. For a uniform mesh of four quadratic elements (NEM = 4, IELEM = 2), the increments DX(I) are ($h = L/4 = 0.01/4 = 0.0025$): $\{\text{DX}\} = \{0.0,\ 0.0025,\ 0.0025,\ 0.0025,\ 0.0025\}$.

The boundary conditions of the problem are $U_9 = 100$, $Q_1^1 = 0$. There is one specified boundary condition on primry variables (NSPV=1) and no specified boundary conditions on the secondary variable with non-zero values (NSSV=0); there are no mixed boundary conditions (NNBC=0). The input data and partial output for a mesh of two quadratic elements are presented in Box P7.8. The finite element solution coincides with the exact solution (see Table 4.3.2) at the nodes.

Box P7.8: Input and partial output for 4 quadratic elements.

```
Prob 7.8: Axisymmetric problem of Example 4.3.4
   1  0  0             MODEL, NTYPE, ITEM
   2  4                IELEM, NEM
   1  0                ICONT, NPRNT
   0.0 0.0025 0.0025 0.0025 0.0025       DX(I)
   0.0   20.0          AX0,  AX1
   0.0    0.0          BX0,  BX1
   0.0    0.0          CX0, CX1
   0.0    2.0E8   0.0  FX0, FX1, FX2
   1                   NSPV
   9 1  100.0          ISPV(1,1),ISPV(1,2),VSPV(1)
   0                   NSSV
   0                   NNBC
   0                   NMPC
```

```
SOLUTION (values of PVs) at the NODES:
0.35000E+03  0.34609E+03  0.33437E+03  0.31484E+03  0.28750E+03
0.25234E+03  0.20937E+03  0.15859E+03  0.10000E+03
```

X	P. Variable	S. Variable
0.00000E+00	0.35000E+03	0.00000E+00
0.25000E-02	0.33437E+03	-0.62500E+03
0.25000E-02	0.33437E+03	-0.62500E+03
0.50000E-02	0.28750E+03	-0.25000E+04
0.50000E-02	0.28750E+03	-0.25000E+04
0.75000E-02	0.20937E+03	-0.56250E+04
0.75000E-02	0.20937E+03	-0.56250E+04
0.10000E-01	0.10000E+03	-0.10000E+05

PROPRIETARY MATERIAL. ©The McGraw-Hill Companies, Inc. All rights reserved.

Problem 7.9: Solve the one-dimensional flow problem of Example 4.4.1 (Set 1), for $dP/dx = -24$, using eight linear elements (see Figure 4.4.1). Compare the finite element results with the exact solution $(4.4.20)_1$.

Solution: For this problem, we have MODEL = 1, NTYPE = 0, and ITEM = 0. Since $a = \mu = 1$ and $f = -dP/dx$ are the same for all elements, we set ICONT = 1, AX0 = μ, and FX0=24. All other coefficients are zero for this problem. For a uniform mesh of four linear elements (NEM = 8, IELEM = 1), the increments (note that the discretization along the y-axis) DX(I) are ($h = 2L/8 = 0.25$): $\{\text{DX}\} = \{-1.0,\ 0.25,\ 0.25,\ 0.25,\ 0.25,\ 0.25,\ 0.25,\ 0.25,\ 0.25\}$.

The boundary conditions of the problem are $U_1 = 0, \quad U_9 = 0$. Thus, there are two specified boundary conditions on primry variables (NSPV=2) and no specified boundary conditions on the secondary variable (NSSV=0); also, there are no mixed boundary conditions (NNBC=0). The input data and partial output for a mesh of four linear elements are presented in Box P7.9. The finite element solution coincides with the exact solution at the nodes.

Box P7.9: Input and partial output for 8 linear elements.

```
      Prob 7.9: The flow problem of Example 4.4.1, set 1
         1  0  0             MODEL, NTYPE, ITEM
         1  8                IELEM, NEM
         1  0                ICONT, NPRNT
        -1.0 0.25 0.25 0.25 0.25
             0.25 0.25 0.25 0.25    DX(I)
         1.0    0.0          AX0,  AX1
         0.0    0.0          BX0,  BX1
         0.0    0.0          CX0, CX1
        24.0    0.0   0.0    FX0, FX1, FX2
         2                   NSPV
         1 1    0.0          ISPV(1,1),ISPV(1,2),VSPV(1)
         9 1    0.0          ISPV(2,1),ISPV(2,2),VSPV(2)
         0                   NSSV
         0                   NNBC
         0                   NMPC


 SOLUTION (values of PVs) at the NODES:

 0.00000E+00  0.52500E+01  0.90000E+01  0.11250E+02  0.12000E+02
 0.11250E+02  0.90000E+01  0.52500E+01  0.00000E+00
```

PROPRIETARY MATERIAL. ©The McGraw-Hill Companies, Inc. All rights reserved.

Problem 7.10: Solve the Couette flow problem in Example 4.4.1 (Set 2) using four quadratic elements. Compare the finite element solution with the exact solution $(4.4.20)_2$.

Solution: For this problem, we have MODEL = 1, NTYPE = 0, ITEM = 0, ICONT = 1, AX0 = μ and $f = -dP/dx$. All other coefficients are zero for this problem. For a uniform mesh of four quadratic elements (NEM = 4, IELEM = 2), the increments (note that the discretization along the y-axis) DX(I) are ($h = 2L/4 = 0.5$): $\{\text{DX}\} = \{-1.0,\ 0.5,\ 0.5,\ 0.5,\ 0.5\}$.

The boundary conditions of the problem are $U_1 = 0, \quad U_5 = U_0$. Thus, there are two specified boundary conditions on primry variables (NSPV=2) and no specified boundary conditions on the secondary variable (NSSV=0); also, there are no mixed boundary conditions (NNBC=0). The input data and partial output for a mesh of four linear elements are presented in Box P7.10. The finite element solution coincides with the exact solution at the nodes.

Box P7.10: Input and partial output for 4 quadratic elements.

```
      Prob 7.10: The flow problem of Example 4.4.1, set 2
         1  0  0             MODEL, NTYPE, ITEM
         2  4                IELEM, NEM
         1  0                ICONT, NPRNT
        -1.0 0.5 0.5 0.5 0.5 DX(I)
         1.0    0.0          AX0,  AX1
         0.0    0.0          BX0,  BX1
         0.0    0.0          CX0, CX1
        24.0    0.0   0.0    FX0, FX1, FX2
         2                   NSPV
         1 1    0.0          ISPV(1,1),ISPV(1,2),VSPV(1)
         9 1    1.0          ISPV(2,1),ISPV(2,2),VSPV(2)
         0                   NSSV
         0                   NNBC
         0                   NMPC
```

```
SOLUTION (values of PVs) at the NODES:

0.00000E+00  0.53750E+01  0.92500E+01  0.11625E+02  0.12500E+02
0.11875E+02  0.97500E+01  0.61250E+01  0.10000E+01

      X        P. Variable  S. Variable

   -0.10000E+01  0.00000E+00  0.24500E+02
   -0.50000E+00  0.92500E+01  0.12500E+02
    0.00000E+00  0.12500E+02  0.50000E+00
    0.50000E+00  0.97500E+01 -0.11500E+02
    0.10000E+01  0.10000E+01 -0.23500E+02
```

PROPRIETARY MATERIAL. ©The McGraw-Hill Companies, Inc. All rights reserved.

Problem 7.11: Solve Problem 4.10 (heat flow in a composite wall) using the minimum number linear finite elements.

Solution: For this problem, we have MODEL = 1, NTYPE = 0, and ITEM = 0. However, due to the discontinuous data (conductivities vary piece-wise), we have ICONT = 0. For a non-uniform mesh of three elements (NEM = 3, IELEM = 1), the element sizes DX(I) are: $\{\text{DX}\} = \{0.005,\ 0.0035,\ 0.0025\}$.

The boundary conditions of the problem are $Q_1^1 = -\beta_L(U_1 - T_\infty^L)$ and $Q_2^3 = -\beta_L(U_4 - T_\infty^R)$. Thus, there are two specified mixed boundary conditions (NNBC=2) and no other boundary conditions. The input data and partial output for a mesh of three linear elements are presented in Box P7.11.1.

Box P7.11: Input and partial output for three linear elements.

```
Prob 7.11: Heat transfer in a composite wall (Prob 4.10)
  1  0  0                 MODEL, NTYPE, ITEM
  1  3                    IELEM, NEM
  0  2                    ICONT, NPRNT
  4                       NNM

  1   2  0.05             NOD(1,J), GLX(1)
 50.0    0.0              AX0, AX1      Data for
  0.0    0.0              BX0, BX1      Element 1
  0.0    0.0              CX0, CX1
  0.0    0.0    0.0       FX0,FX1,FX2

  2   3  0.035            NOD(2,J), GLX(2)
 30.0    0.0              AX0, AX1      Data for
  0.0    0.0              BX0, BX1      Element 2
  0.0    0.0              CX0, CX1
  0.0    0.0    0.0       FX0,FX1,FX2

  3   4  0.025            NOD(3,J), GLX(3)
 70.0    0.0              AX0, AX1      Data for
  0.0    0.0              BX0, BX1      Element 3
  0.0    0.0              CX0, CX1
  0.0    0.0    0.0       FX0,FX1,FX2

  0                       NSPV
  0                       NSSV
  2                       NNBC  (with transv. spring)
  1    1    10.0 100.0    INBC(1,1),INBC(1,2),VNBC(1),UREF(1)
  4    1    15.0  35.0    INBC(2,1),INBC(2,2),VNBC(1),UREF(2)
  0                       NMPC
```

PROPRIETARY MATERIAL. ©The McGraw-Hill Companies, Inc. All rights reserved.

(**Box P7.11**) is continued from the previous page.

```
     OUTPUT from program   FEM1DV2.5   by J. N. REDDY

 Prob 7.11: Heat transfer in a composite wall (Prob 4.10)

     *** ANALYSIS OF MODEL 1, AND TYPE 0 PROBLEM ***
                (see the code below)

     MODEL=1,NTYPE=0: A problem described by MODEL EQ. 1
     MODEL=1,NTYPE=1: A circular DISK (PLANE STRESS)
     MODEL=1,NTYPE>1: A circular DISK (PLANE STRAIN)
     MODEL=2,NTYPE=0: A Timoshenko BEAM (RIE) problem
     MODEL=2,NTYPE=1: A Timoshenko PLATE (RIE) problem
     MODEL=2,NTYPE=2: A Timoshenko BEAM (CIE) problem
     MODEL=2,NTYPE>2: A Timoshenko PLATE (CIE) problem
     MODEL=3,NTYPE=0: A Euler-Bernoulli BEAM problem
     MODEL=3,NTYPE>0: A Euler-Bernoulli Circular plate
     MODEL=4,NTYPE=0: A plane TRUSS problem
     MODEL=4,NTYPE=1: A Euler-Bernoulli FRAME problem
     MODEL=4,NTYPE=2: A Timoshenko (CIE) FRAME problem

     Boundary information on mixed boundary cond.:

          1    1    0.10000E+02    0.10000E+03
          4    1    0.15000E+02    0.35000E+02

    Element coefficient matrix, [ELK-1]:
     0.10000E+04 -0.10000E+04
    -0.10000E+04  0.10000E+04

    Element coefficient matrix, [ELK-2]:
     0.85714E+03 -0.85714E+03
    -0.85714E+03  0.85714E+03

    Element coefficient matrix, [ELK-3]:
     0.28000E+04 -0.28000E+04
    -0.28000E+04  0.28000E+04

    Global coefficient matrix, [GLK-banded]:
     0.10100E+04 -0.10000E+04
                  0.18571E+04 -0.85714E+03
                               0.36571E+04 -0.28000E+04
                       sym.                 0.28150E+04

  SOLUTION (values of PVs) at the NODES:
     0.61582E+02  0.61198E+02  0.60749E+02  0.60612E+02
```

PROPRIETARY MATERIAL. ©The McGraw-Hill Companies, Inc. All rights reserved.

Problem 7.12: Solve Problem 4.22 (axisymmetric problem of unconfined aquifer) using the minimum number of linear finite elements.

Solution: For this problem, we have MODEL = 1, NTYPE = 0, and ITEM = 0. For this axisymmetric problem, we have $a = k \cdot r$ (ICONT = 1, AX1 = k). All other coefficients are zero. For the non-uniform mesh of six linear elements (NEM = 6, IELEM = 1), the increments DX(I) are: {DX} = {0.0, 10.0, 10.0, 20.0, 40.0, 60.0, 60.0}.

The boundary conditions of the problem are $U_7 = 50$, $Q_1^1 = -150$. There is one specified boundary condition on primry variables (NSPV=1) and one specified boundary condition on the secondary variable with non-zero values (NSSV=1); there are no mixed boundary conditions (NNBC=0). The input data and partial output for a mesh of two quadratic elements are presented in Box P7.12.1.

Box P7.12: Input and partial output for six linear elements.

```
Prob 7.12: Axisymmetric unconfined aquifer (Prob 4.22)
   1  0  0             MODEL, NTYPE, ITEM
   1  6                IELEM, NEM
   1  0                ICONT, NPRNT
   0.0 10.0 10.0 20.0 40.0 60.0 60.0 DX(I)
   0.0   25.0          AX0,  AX1
   0.0    0.0          BX0,  BX1
   0.0    0.0          CX0, CX1
   0.0    0.0   0.0    FX0, FX1, FX2
   1                   NSPV
   7 1   50.0          ISPV(1,1),ISPV(1,2),VSPV(1)
   1                   NSSV
   1 1 -150.0          ISSV(1,1),ISSV(1,2),VSSV(1)
   0                   NNBC
   0                   NMPC

SOLUTION (values of PVs) at the NODES:
0.20610E+02  0.32610E+02  0.36610E+02  0.40610E+02  0.44610E+02
0.47882E+02  0.50000E+02
```

X	P. Variable	S. Variable
0.00000E+00	0.20610E+02	0.00000E+00
0.10000E+02	0.32610E+02	0.30000E+03
0.10000E+02	0.32610E+02	0.10000E+03
0.20000E+02	0.36610E+02	0.20000E+03
0.20000E+02	0.36610E+02	0.10000E+03
0.40000E+02	0.40610E+02	0.20000E+03
0.40000E+02	0.40610E+02	0.10000E+03
0.80000E+02	0.44610E+02	0.20000E+03
0.80000E+02	0.44610E+02	0.10909E+03
0.14000E+03	0.47882E+02	0.19091E+03
0.14000E+03	0.47882E+02	0.12353E+03
0.20000E+03	0.50000E+02	0.17647E+03

PROPRIETARY MATERIAL. ©The McGraw-Hill Companies, Inc. All rights reserved.

Problem 7.13: Solve Problem 4.25.

Solution: The input data and edited output for the stepped composite bar of Figure P7.13 are presented in Box P7.13.

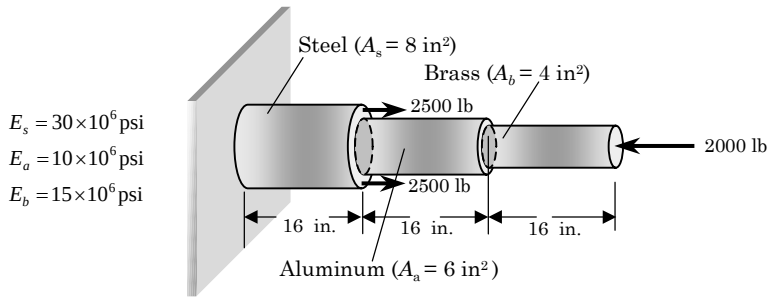

Figure P7.13

Box P7.13: Input and partial output for Problem 7.13.

```
Problem 7.13: Stepped composite bar
  1  0  0              MODEL, NTYPE, ITEM
  1  3                 IELEM, NEM
  0  1                 ICONT, NPRNT
  4                    NNM

  1    2   16.0        NOD(1,J),GLX(1)
 24.0E7     0.0        AX0, AX1       Data for
  0.0       0.0        BX0, BX1       Element 1
  0.0       0.0        CX0, CX1
  0.0       0.0   0.0  FX0,FX1,FX2

  2    3   16.0        NOD(2,J),GLX(2)
  6.0E7     0.0        AX0, AX1       Data for
  0.0       0.0        BX0, BX1       Element 2
  0.0       0.0        CX0, CX1
  0.0       0.0   0.0  FX0,FX1,FX2

  3    4   16.0        NOD(3,J),GLX(3)
  6.0E7     0.0        AX0, AX1       Data for
  0.0       0.0        BX0, BX1       Element 3
  0.0       0.0        CX0, CX1
  0.0       0.0   0.0  FX0,FX1,FX2

   1                   NSPV
   1 1   0.0           ISPV(1,1),ISPV(1,2),VSPV(1)
   2                   NSSV
   2 1   5.0E3         ISSV(1,1),ISSV(1,2),VSSV(1)
   4 1  -2.0E3         ISSV(2,1),ISSV(2,2),VSSV(2)

   0                   NNBC
   0                   NMPC

 SOLUTION (values of PVs) at the NODES:

  0.00000E+00  0.20000E-03 -0.33333E-03 -0.86667E-03
```

PROPRIETARY MATERIAL. © The McGraw-Hill Companies, Inc. All rights reserved.

Problem 7.14: Solve Problem 4.27.

Solution: The input data and edited output for the stepped composite bar of Figure P7.14 are presented in Box P7.14.

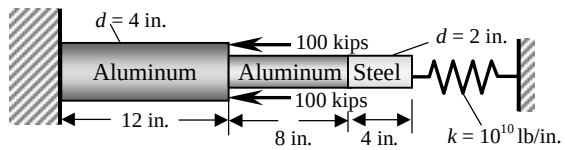

Steel, $E_s = 30 \times 10^6$ psi, Aluminum, $E_a = 10 \times 10^6$ psi

Figure P7.14

Box P7.14: Input and partial output for Problem 7.14.

```
Problem 7.14: Spring-supported composite bar
  1  0  0              MODEL, NTYPE, ITEM
  1  3                 IELEM, NEM
  0  1                 ICONT, NPRNT
  4                    NNM
  1    2   12.0        NOD(1,J),GLX(1)
125.6637E6  0.0        AX0, AX1       Data for
  0.0       0.0        BX0, BX1       Element 1
  0.0       0.0        CX0, CX1
  0.0       0.0   0.0  FX0,FX1,FX2
  2    3    8.0        NOD(2,J),GLX(2)
 31.4159E6  0.0        AX0, AX1       Data for
  0.0       0.0        BX0, BX1       Element 2
  0.0       0.0        CX0, CX1
  0.0       0.0   0.0  FX0,FX1,FX2
  3    4    4.0        NOD(3,J),GLX(3)
 94.2478E6  0.0        AX0, AX1       Data for
  0.0       0.0        BX0, BX1       Element 3
  0.0       0.0        CX0, CX1
  0.0       0.0   0.0  FX0,FX1,FX2
   1                   NSPV
   1 1   0.0           ISPV(1,1),ISPV(1,2),VSPV(1)
   1                   NSSV
   2 1  -2.0E5         ISSV(1,1),ISSV(1,2),VSSV(1)
   1                   NNBC
   4 1   1.0E10   0.0  INBC(1,1),INBC(1,2),VNBC(1),UREF(1)
   0                   NMPC

SOLUTION (values of PVs) at the NODES:

   0.00000E+00 -0.14454E-01 -0.20690E-02 -0.48636E-05
```

PROPRIETARY MATERIAL. ©The McGraw-Hill Companies, Inc. All rights reserved.

Problem 7.15: Solve Problem 4.35 using two linear elements.

Solution: The input data and edited output for the simply supported beam of Figure P7.15 are presented in Box P7.15. Two linear elements are used. Note that $a = 1$ and

$$f(x) = \frac{q_0}{2EI}\left(Lx - x^2\right)$$

In the interest of non-dimensionalizing the solution, we have used $L = 1$, $EI = 1$ and $q_0 = 1$.

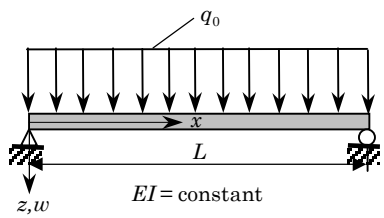

Figure P7.15

Box P7.15: Input and partial output for Problem 7.15.

```
Problem 7.15: Simply-supported beam using the bar element
   1  0  0                 MODEL, NTYPE, ITEM
   1  2                    IELEM, NEM
   1  1                    ICONT, NPRNT
   0.0  0.5  0.5           DX(I)
   1.0    0.0              AX0, AX1
   0.0    0.0              BX0, BX1
   0.0    0.0              CX0, CX1
   0.0    0.5  -0.5        FX0, FX1, FX2
   2                       NSPV
   1  1   0.0              ISPV(1,1), ISPV(1,2), VSPV(1)
   3  1   0.0              ISPV(2,1), ISPV(2,2), VSPV(2)
   0                       NSSV
   0                       NNBC
   0                       NMPC

SOLUTION (values of PVs) at the NODES:

   0.00000E+00  0.13021E-01  0.00000E+00
```

PROPRIETARY MATERIAL. ©The McGraw-Hill Companies, Inc. All rights reserved.

Problem 7.16: Determine the forces and elongations in the wires AB and CD shown in Figure P7.16. Each wire has a cross-sectional area of $A = 0.03$ in^2 and modulus of elasticity $E = 30 \times 10^6$ psi.

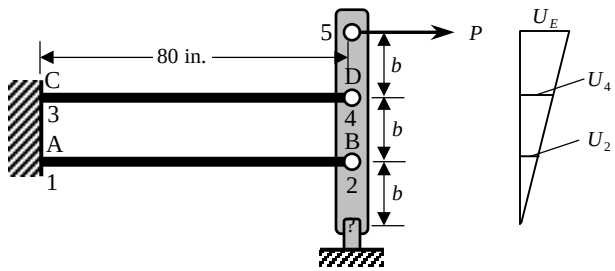

Figure P7.16

Solution: This problem is similar to Examples 4.6.3 and 7.3.6. The constraint conditions are

$$\frac{U_2}{b} = \frac{U_4}{2b} = \frac{U_5}{3b} \rightarrow 3U_2 - U_5 = 0, \quad 1.5U_4 - U_5 = 0$$

The input data and modified output are presented in Box P7.16. The forces are found to be $F_{AB} = 420$ lbs and $F_{CD} = 840$ lbs, and the elongations are $\delta_{AB} = 0.037334$ in. and $\delta_{CD} = 0.074666$ in., while the point E deflects by $\delta_E = 0.112$ in. The input data and edited output are presented in Box P7.16.

Box P7.16: Input and partial output for Problem 7.16.

```
Problem 7.16: DEFORMATION OF A CONSTRAINED STRUCTURE
   1  0  0              MODEL, NTYPE, ITEM
   1  3                 IELEM, NEM
   0  1                 ICONT, NPRNT
   5                    NNM

   1      3      0.4    NOD(1,J)
   3.2E6 0.0            AX0, AX1      Data for
   0.0    0.0           BX0, BX1      Element 1
   0.0    0.0           CX0, CX1
   0.0    0.0    0.0    FX0,FX1,FX2

   2      4      0.8    NOD(2,J)
   3.2E6 0.0            AX0, AX1      Data for
   0.0    0.0           BX0, BX1      Element 2
   0.0    0.0           CX0, CX1
   0.0    0.0    0.0    FX0,FX1,FX2
```

PROPRIETARY MATERIAL. ©The McGraw-Hill Companies, Inc. All rights reserved.

(**Box P7.16** is continued from the previous page)

```
      1      5      1.6    NOD(3,J)
      0.0    0.0           AX0, AX1      Data for
      0.0    0.0           BX0, BX1      Element 3
      0.0    0.0           CX0, CX1
      0.0    0.0    0.0    FX0,FX1,FX2

       2                   NSPV
       3 1   0.0           ISPV(1,1),ISPV(1,2),VSPV(1)
       4 1   0.0           ISpV(2,1),ISpV(2,2),VSpV(2)
       0                   NSSV
       0                   NNBC
       2                   NMPC
       1 1   5 1  3.2 -1.0 0.0 0.0   IMC1(I,J), IMC2(I,J)
       2 1   5 1  1.33333 -1.0 0.0 970.0    VMPC(1,I)

SOLUTION (values of PVs) at the NODES:

0.10000E-03  0.24000E-03  0.00000E+00  0.00000E+00  0.32001E-03

REACTION FORCES:

0.80001E+03  0.95999E+03
```

Problem 7.17: Solve the problem of axisymmetric deformation of a rotating circular disk using four linear elements (see Example 7.3.5).

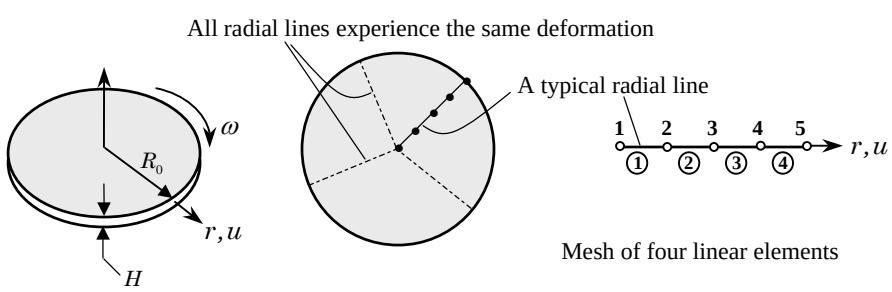

Figure P7.17

Solution: The input data and edited output for the circular disk problem are presented in Box P7.17.

PROPRIETARY MATERIAL. ©The McGraw-Hill Companies, Inc. All rights reserved.

Box P7.17: Input and partial output for Problem 7.17.

```
 Example 7.3.5: Deformation of a circular disk (4 linear elements)
     1  1  0                        MODEL, NTYPE, ITEM
     1  4                           IELEM, NEM
     1  1                           ICONT, NPRNT
  0.0  0.25  0.25  0.25  0.25       DX(I)
       1.0  1.0                     AX0, AX1
       0.3  1.0                     BX0, BX1
       0.0  0.0                     CX0, CX1
       0.0  1.0     0.0             FX0, FX1, FX2
     1                              NSPV
     1  1   0.0                     ISPV(1,1), ISPV(1,2), VSPV(1)
     0                              NSSV
     0                              NNBC
     0                              NMPC
  ____________________________________________________
    OUTPUT from program   FEM1D   by J. N. REDDY
  ____________________________________________________

Example 7.3.5: Deformation of a circular disk (4 linear elements)

    *** ANALYSIS OF MODEL 1, AND TYPE 1 PROBLEM ***

    MODEL=1,NTYPE=0: A problem described by MODEL EQ. 1
    MODEL=1,NTYPE=1: A circular DISK (PLANE STRESS)
    MODEL=1,NTYPE>1: A circular DISK (PLANE STRAIN)

          Element type (0, Hermite,>0, Lagrange)..=   1
          No. of deg. of freedom per node, NDF....=   1
          No. of elements in the mesh, NEM........=   4
          No. of total DOF in the model, NEQ......=   5
          Half bandwidth of the matrix, NHBW......=   2
          No. of specified primary DOF, NSPV......=   1
          No. of specified secondary DOF, NSSV....=   0
          No. of specified Newton B. C.: NNBC.....=   0

    SOLUTION (values of PVs) at the NODES:

0.00000E+00  0.71696E-01  0.13141E+00  0.16935E+00  0.17500E+00
    ____________________________________________________________
         X       Displacemnt  Radial Strs  Hoop Stress
    ____________________________________________________________
    0.00000E+00  0.00000E+00  0.28678E+00
    0.31250E-01  0.89620E-02  0.40969E+00  0.40969E+00
    0.12500E+00  0.35848E-01  0.40969E+00  0.40969E+00
    0.25000E+00  0.71696E-01  0.40969E+00  0.40969E+00
    0.25000E+00  0.71696E-01  0.35703E+00  0.39389E+00
    0.37500E+00  0.10155E+00  0.35176E+00  0.37634E+00
    0.50000E+00  0.13141E+00  0.34913E+00  0.36756E+00
    0.50000E+00  0.13141E+00  0.25341E+00  0.33884E+00
    0.75000E+00  0.16935E+00  0.24121E+00  0.29816E+00
    0.75000E+00  0.16935E+00  0.99275E-01  0.25558E+00
    0.87500E+00  0.17218E+00  0.89705E-01  0.22368E+00
    0.10000E+01  0.17500E+00  0.82527E-01  0.19976E+00
    ____________________________________________________________
```

PROPRIETARY MATERIAL. ©The McGraw-Hill Companies, Inc. All rights reserved.

7.18–7.25 Solve Problems 5.7–5.14 using the minimum number of Euler–Bernoulli beam elements (*Note:* Numerous other beam problems can be found in books on mechanics of deformable solids).

Solutions: For each of the beam problems, the figure of the beam structure, input data file and edited output are listed. Note that the bending moment and shear force computed in the postcomputation will not be accurate. The frame element will give the correct element forces and moments.

Problem 7.18:

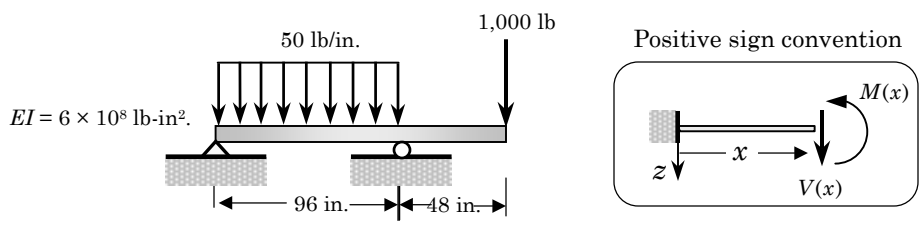

Figure P7.18

Box P7.18a: Input and partial output for Problem 7.18.

```
PROBLEM 5.7: BEAM PROBLEM
   3  0  0                          MODEL, NTYPE, ITEM
   0  2                             IELEM, NEM
   0  1                             ICONT, NPRNT
      3                             NNM
     1  2  96.0                     NOD(1,J),GLX(1)
     0.0    0.0                     AX0, AX1
     6.0E8  0.0                     BX0, BX1
     0.0    0.0                     CX0, CX1
    50.0    0.0  0.0                FX0,FX1,FX2
     2  3  48.0                     NOD(1,J),GLX(2)
     0.0    0.0                     AX0, AX1
     6.0E8  0.0                     BX0, BX1
     0.0    0.0                     CX0, CX1
     0.0    0.0  0.0                FX0,FX1,FX2
   2                                NSPV
   1  1    0.0                      ISPV(1,1),ISPV(1,2),VSPV(1)
   2  1    0.0                      ISPV(2,1),ISPV(2,2),VSPV(2)
   1                                NSSV
   3  1   1000.0                    ISSV(1,1),ISSV(1,2),VSSV(1)
   0                                NNBC
   0                                NMPC

  SOLUTION (values of PVs) at the NODES:
  0.00000E+00 -0.17920E-02  0.00000E+00  0.51200E-03  0.36864E-01
 -0.14080E-02
```

PROPRIETARY MATERIAL. ©The McGraw-Hill Companies, Inc. All rights reserved.

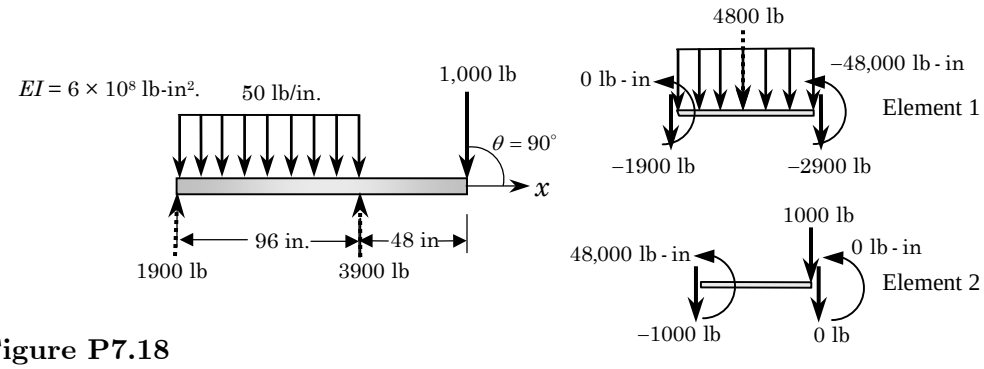

Figure P7.18

Box P7.18b: Input and partial output for Problem 7.18 using the frame element.

```
      PROBLEM 5.7: BEAM PROBLEM USING FRAME ELEMENT
         4  1  0                      MODEL, NTYPE, ITEM
         0  2                         IELEM, NEM
         0  1                         ICONT, NPRNT
            3                         NNM
       0.3 6.0E8 96.0   1.0  1.0  1.0  0.0 PR, SE, SL, SA, SI, CS, SN
       0.0 50.0   0.0   0.0  0.0  1.0      HF, VF, PF, XB, CST, SNT
         1  2                              NOD
       0.3 6.0E8 48.0   1.0  1.0  1.0  0.0
       0.0 0.0    1.E3 48.0  0.0  1.0
         2  3
         0                            NCON
         3                            NSPV
         1  1    0.0                  ISPV(1,1),ISPV(1,2),VSPV(1)
         1  2    0.0                  ISPV(1,1),ISPV(1,2),VSPV(1)
         2  2    0.0                  ISPV(2,1),ISPV(2,2),VSPV(2)
         0                            NSSV
         0                            NNBC
         0                            NMPC

 SOLUTION (values of PVs) at the NODES:

 0.00000E+00  0.00000E+00 -0.17920E-02  0.00000E+00  0.00000E+00
 0.51200E-03  0.00000E+00  0.36864E-01 -0.14080E-02

      Generalized forces in the element coordinates
  (second line gives the results in the global coordinates)
```

Ele	Force, H1	Force, V1	Moment, M1	Force, H2	Force, V2	Moment, M2
1	0.0000E+00	-0.1900E+04	0.0000E+00	0.0000E+00	-0.2900E+04	-0.4800E+05
	0.0000E+00	-0.1900E+04	0.0000E+00	0.0000E+00	-0.2900E+04	-0.4800E+05
2	0.0000E+00	-0.1000E+04	0.4800E+05	0.0000E+00	0.0000E+00	0.0000E+00
	0.0000E+00	-0.1000E+04	0.4800E+05	0.0000E+00	0.0000E+00	0.0000E+00

PROPRIETARY MATERIAL. ©The McGraw-Hill Companies, Inc. All rights reserved.

Problem 7.19: Here we use $h = 1.0$, $q_0 = 1$ and $EI = 1$, but understand that the deflection is a multiple of $q_0 h^4/EI$ and rotation is a multiple of $q_0 h^3/EI$.

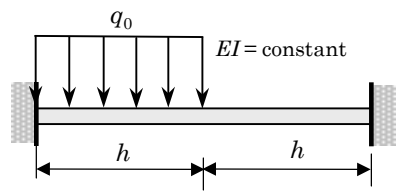

Figure P7.19

Box P7.19: Input and partial output for Problem 7.19.

```
     PROBLEM 5.8: BEAM PROBLEM
        3  0  0                      MODEL, NTYPE, ITEM
        0  2                         IELEM, NEM
        0  1                         ICONT, NPRNT
           3                         NNM
          1  2   1.0                 NOD(1,J),GLX(1)
          0.0    0.0                 AX0, AX1
          1.0E0  0.0                 BX0, BX1
          0.0    0.0                 CX0, CX1
          1.0    0.0  0.0            FX0,FX1,FX2
          2  3   1.0                 NOD(1,J),GLX(2)
          0.0    0.0                 AX0, AX1
          1.0E0  0.0                 BX0, BX1
          0.0    0.0                 CX0, CX1
          0.0    0.0  0.0            FX0,FX1,FX2
        4                            NSPV
        1  1    0.0                  ISPV(1,1),ISPV(1,2),VSPV(1)
        1  2    0.0                  ISPV(2,1),ISPV(2,2),VSPV(2)
        3  1    0.0                  ISPV(3,1),ISPV(3,2),VSPV(3)
        3  2    0.0                  ISPV(4,1),ISPV(4,2),VSPV(4)
        0                            NSSV
        0                            NNBC
        0                            NMPC
SOLUTION (values of PVs) at the NODES:
   0.00000E+00  0.00000E+00  0.20833E-01 (q0h^4/EI)  0.10417E-01 (q0h^3/EI)
   0.00000E+00  0.00000E+00
```

X	Deflect.	Rotation	B. Moment	Shear Force
0.10000E+01	0.20833E-01	0.10417E-01	-0.16667E+00	-0.31250E+00
0.00000E+00	0.20833E-01	0.10417E-01	-0.83333E-01	0.18750E+00

PROPRIETARY MATERIAL. ©The McGraw-Hill Companies, Inc. All rights reserved.

Problem 7.20: We can exploit the symmetry of the problem and use half-beam model with $dw/dx = 0$ at the line of symmetry.

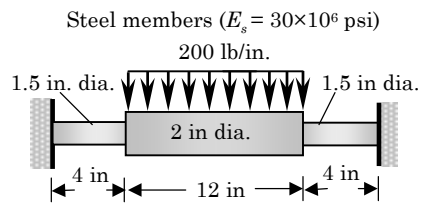

Figure P7.20

Box P7.20: Input and partial output for Problem 7.20.

```
      PROBLEM 5.9: BEAM PROBLEM (Half-beam model)
         3  0  0                      MODEL, NTYPE, ITEM
         0  2                         IELEM, NEM
         0  1                         ICONT, NPRNT
            3                         NNM
           1  2      4.0              NOD(1,J),GLX(1)
           0.0       0.0              AX0, AX1
          7.455E6    0.0              BX0, BX1
           0.0       0.0              CX0, CX1
           0.0       0.0  0.0         FX0,FX1,FX2
           2  3      6.0              NOD(1,J),GLX(2)
           0.0       0.0              AX0, AX1
         23.562E6    0.0              BX0, BX1
           0.0       0.0              CX0, CX1
         200.0       0.0  0.0         FX0,FX1,FX2
         3                            NSPV
         1  1        0.0              ISPV(1,1),ISPV(1,2),VSPV(1)
         1  2        0.0              ISPV(2,1),ISPV(2,2),VSPV(2)
         3  2        0.0              ISPV(3,1),ISPV(3,2),VSPV(3)
         0                            NSSV
         0                            NNBC
         0                            NMPC

 SOLUTION (values of PVs) at the NODES:

 0.00000E+00  0.00000E+00  0.25163E-02 -0.82891E-03  0.54614E-02
 0.00000E+00

x is the global coord. if ICONT=1 and it is the local coord. if ICONT=0
      x        Deflect.     Rotation     B. Moment   Shear Force
 0.00000E+00  0.00000E+00  0.00000E+00  0.39449E+04 -0.12000E+04
 0.20000E+01  0.84370E-03 -0.73639E-03  0.15449E+04 -0.12000E+04
 0.40000E+01  0.25163E-02 -0.82891E-03 -0.85512E+03 -0.12000E+04
 0.00000E+00  0.25163E-02 -0.82891E-03 -0.14551E+04 -0.60000E+03
 0.30000E+01  0.46105E-02 -0.52905E-03 -0.32551E+04 -0.60000E+03
 0.60000E+01  0.54614E-02  0.00000E+00 -0.50551E+04 -0.60000E+03
```

PROPRIETARY MATERIAL. ©The McGraw-Hill Companies, Inc. All rights reserved.

Problem 7.21:

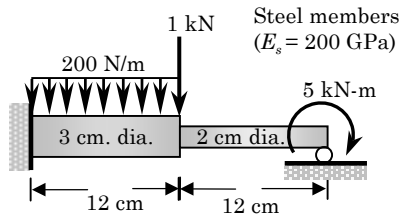

Figure P7.21

Box P7.21: Input and partial output for Problem 7.21.

```
 PROBLEM 5.10: BEAM PROBLEM
    3  0  0                    MODEL, NTYPE, ITEM
    0  2                       IELEM, NEM
    0  2                       ICONT, NPRNT
       3                       NNM
    1  2      0.12             NOD(1,J),GLX(1)
    0.0       0.0              AX0, AX1
    7.952E3  0.0              BX0, BX1
    0.0       0.0              CX0, CX1
  200.0       0.0  0.0         FX0,FX1,FX2
    2  3      0.12             NOD(1,J),GLX(2)
    0.0       0.0              AX0, AX1
    1.571E3   0.0              BX0, BX1
    0.0       0.0              CX0, CX1
    0.0       0.0  0.0         FX0,FX1,FX2
    3                          NSPV
    1  1      0.0              ISPV(1,1),ISPV(1,2),VSPV(1)
    1  2      0.0              ISPV(2,1),ISPV(2,2),VSPV(2)
    3  1      0.0              ISPV(3,1),ISPV(3,2),VSPV(3)
    2                          NSSV
    2  1      1.0E3            ISPV(1,1),ISPV(1,2),VSPV(1)
    3  2     -5.0E3            ISPV(2,1),ISPV(2,2),VSPV(2)
    0                          NNBC
    0                          NMPC

 SOLUTION (values of PVs) at the NODES:

 0.00000E+00  0.00000E+00 -0.30022E-02  0.37671E-01  0.00000E+00
-0.15184E+00
```

PROPRIETARY MATERIAL. ©The McGraw-Hill Companies, Inc. All rights reserved.

Problem 7.22:

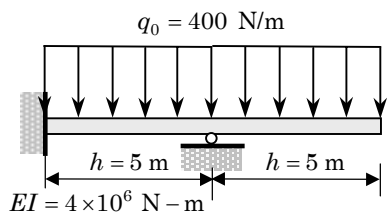

Figure P7.22

Box P7.22: Input and partial output for Problem 7.22.

```
     PROBLEM 5.11: BENDING OF A BEAM (Euler-Bernoulli)
        3   0  0                MODEL, NTYPE, ITEM
        0   2                   IELEM, NEM
        1   1                   ICONT, NPRNT
        0.0    5.0    5.0       DX(I)
        0.0    0.0              AX0, AX1
        4.0E6  0.0              BX0, BX1
        0.0    0.0              CX0, CX1
      400.0    0.0    0.0       FX0,FX1,FX2
        3                       NSPV
        1  1   0.0              ISPV(1,1),ISPV(1,2),VSPV(1)
        1  2   0.0              ISPV(2,1),ISPV(2,2),VSPV(2)
        2  1   0.0              ISPV(3,1),ISPV(3,2),VSPV(3)
        0                       NSSV
        0                       NNBC
        0                       NMPC

 SOLUTION (values of PVs) at the NODES:

 0.00000E+00  0.00000E+00  0.00000E+00 -0.13021E-02  0.14323E-01
-0.33854E-02
```

x	Deflect.	Rotation	B. Moment	Shear Force
0.00000E+00	0.00000E+00	0.00000E+00	-0.20833E+04	0.12500E+04
0.25000E+01	-0.81380E-03	0.32552E-03	0.10417E+04	0.12500E+04
0.50000E+01	0.00000E+00	-0.13021E-02	0.41667E+04	0.12500E+04
0.50000E+01	0.00000E+00	-0.13021E-02	0.41667E+04	-0.10000E+04
0.75000E+01	0.58594E-02	-0.31250E-02	0.16667E+04	-0.10000E+04
0.10000E+02	0.14323E-01	-0.33854E-02	-0.83333E+03	-0.10000E+04

PROPRIETARY MATERIAL. ©The McGraw-Hill Companies, Inc. All rights reserved.

Problem 7.23:

$$h = 4\,\text{m},\ EI = 50\times10^6\,\text{N}-\text{m}^2, F_0 = 5\,\text{kN}$$
$$F_1 = 2\,\text{kN},\ q_0 = 10^3\,\text{N/m},\ a = 0.1\,\text{m}$$

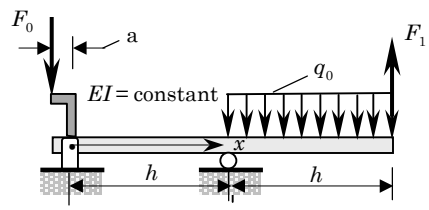

Figure P7.23

Box P7.23: Input and partial output for Problem 7.23.

```
   PROBLEM 5.12: BENDING OF A BEAM (Euler-Bernoulli)
      3  0  0                    MODEL, NTYPE, ITEM
      0  2                       IELEM, NEM
      0  2                       ICONT, NPRNT
         3                       NNM
      1  2      4.0              NOD(1,J),GLX(1)
      0.0       0.0              AX0, AX1
      5.0E7     0.0              BX0, BX1
      0.0       0.0              CX0, CX1
      0.0       0.0  0.0         FX0,FX1,FX2
      2  3      4.0              NOD(1,J),GLX(2)
      0.0       0.0              AX0, AX1
      5.0E7     0.0              BX0, BX1
      0.0       0.0              CX0, CX1
      1.0E3     0.0  0.0         FX0,FX1,FX2
      2                          NSPV
      1  1      0.0              ISPV(1,1),ISPV(1,2),VSPV(1)
      2  1      0.0              ISPV(2,1),ISPV(2,2),VSPV(2)
      2                          NSSV
      1  2      0.5E3            ISPV(1,1),ISPV(1,2),VSPV(1)
      3  1     -2.0E3            ISPV(2,1),ISPV(2,2),VSPV(2)
      0                          NNBC
      0                          NMPC

SOLUTION (values of PVs) at the NODES:
0.00000E+00  0.13333E-04  0.00000E+00 -0.66667E-05 -0.18667E-03
0.10000E-03
```

x	Deflect.	Rotation	B. Moment	Shear Force
0.00000E+00	0.00000E+00	0.13333E-04	0.50000E+03	-0.12500E+03
0.20000E+01	-0.10000E-04	-0.16667E-05	0.25000E+03	-0.12500E+03
0.40000E+01	0.00000E+00	-0.66667E-05	0.37436E-06	-0.12500E+03
0.00000E+00	0.00000E+00	-0.66667E-05	-0.13333E+04	0.50822E-12
0.20000E+01	-0.40000E-04	0.46667E-04	-0.13333E+04	0.50822E-12
0.40000E+01	-0.18667E-03	0.10000E-03	-0.13333E+04	0.50822E-12

PROPRIETARY MATERIAL. ©The McGraw-Hill Companies, Inc. All rights reserved.

Problem 7.24:

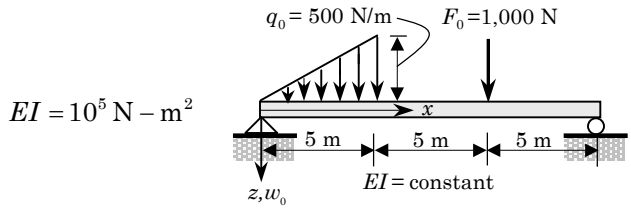

Figure P7.24

Box P7.24: Input and partial output for Problem 7.24.

```
   PROBLEM 5.13: BENDING OF A BEAM (Euler-Bernoulli)
      3  0  0                  MODEL, NTYPE, ITEM
      0  3                     IELEM, NEM
      0  1                     ICONT, NPRNT
      4                        NNM
        1   2   5.0            NOD(1,J), GLX(1)
        0.0     0.0            AX0, AX1
        1.0E5   0.0            BX0, BX1
        0.0     0.0            CX0, CX1
        0.0   100.0  0.0       FX0, FX1, FX2
        2   3   5.0            NOD(1,J), GLX(2)
        0.0     0.0            AX0, AX1
        1.0E5   0.0            BX0, BX1
        0.0     0.0            CX0, CX1
        0.0     0.0  0.0       FX0, FX1, FX2
        3   4   5.0            NOD(1,J), GLX(3)
        0.0     0.0            AX0, AX1
        1.0E5   0.0            BX0, BX1
        0.0     0.0            CX0, CX1
        0.0     0.0  0.0       FX0, FX1, FX2
      2                        NSPV
      1  1    0.0               ISPV(1,1),VSPV(1,2),VSPV(1)
      4  1    0.0               ISPV(2,1),VSPV(2,2),VSPV(2)
      1                        NSSV
      3  1    1000.0            ISSV(1,1),VSSV(1,2),VSSV(1)
      0                        NNBC
      0                        NMPC


SOLUTION (values of PVs) at the NODES:
0.00000E+00 -0.24826E+00  0.99537E+00 -0.11111E+00  0.98380E+00
0.11806E+00  0.00000E+00  0.23611E+00
```

PROPRIETARY MATERIAL. ©The McGraw-Hill Companies, Inc. All rights reserved.

Problem 7.25:

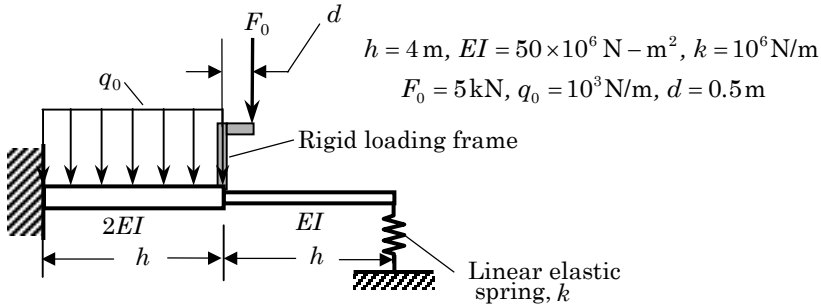

Figure P7.25

Box P7.25: Input and partial output for Problem 7.25.

```
 PROBLEM 5.14: BENDING OF A BEAM (Euler-Bernoulli)
    3  0  0                  MODEL, NTYPE, ITEM
    0  2                     IELEM, NEM
    0  1                     ICONT, NPRNT
    3                        NNM
      1   2   4.0            NOD(1,J), GLX(1)
      0.0     0.0            AX0, AX1
      1.0E8   0.0            BX0, BX1
      0.0     0.0            CX0, CX1
      1.0E3   0.0  0.0       FX0, FX1, FX2
      2   3   4.0            NOD(1,J), GLX(2)
      0.0     0.0            AX0, AX1
      5.0E7   0.0            BX0, BX1
      0.0     0.0            CX0, CX1
      0.0     0.0  0.0       FX0, FX1, FX2
    2                        NSPV
    1  1    0.0              ISPV(1,1),VSPV(1,2),VSPV(1)
    1  2    0.0              ISPV(2,1),VSPV(2,2),VSPV(2)
    2                        NSSV
    2  1    5.0E3            ISSV(1,1),VSSV(1,2),VSSV(1)
    2  2   -2.5E3            ISSV(1,1),VSSV(1,2),VSSV(1)
    1                        NNBC
    3  1    1.0E6  0.0       INBC(1,1),INBC(1,2),VNBC(1),UREF(1)
    0                        NMPC


SOLUTION (values of PVs) at the NODES:

 0.00000E+00  0.00000E+00  0.85364E-03 -0.27680E-03  0.13744E-02
-0.56895E-04
```

PROPRIETARY MATERIAL. ©The McGraw-Hill Companies, Inc. All rights reserved.

Problem 7.26: Analyze Problem 7.22 (same as Problem 5.11) using the RIE Timoshenko element. Assume $\nu = 0.25$, $K_s = 5/6$ and $H = 0.1$ m (beam height). Use 2,4 and 8 elements to see the convergence characteristics of the RIE element (two-element model may yield results very far off from the Euler–Bernoulli beam solution).

Solution: First, we calculate GAK_s

$$GAK_s = GBH\frac{5}{6} = \frac{E}{2(1+0.25)}\frac{BH^3}{12}\frac{12}{H^2}\frac{5}{6} = \frac{4EI}{H^2}$$

Thus, $GAK_s = 1.6 \times 10^8$ N. A typical input file and deflection and rotations obtained at $x = L = 10$m by the three meshes are tabulated in Box P7.26.

Box P7.26: Input and partial output for Problem 7.26.

```
PROBLEM 5.11: BENDING OF A BEAM (RIE Timoshenko element)
   2   0  0                MODEL, NTYPE, ITEM
   1   8                   IELEM, NEM
   1   1                   ICONT, NPRNT
   0.0    1.25  1.25  1.25  1.25
          1.25  1.25  1.25  1.25  DX(I)
  16.0E8  0.0              AX0, AX1
   4.0E6  0.0              BX0, BX1
   0.0    0.0              CX0, CX1
 400.0    0.0  0.0         FX0,FX1,FX2
   3                       NSPV
   1  1   0.0              ISPV(1,1),ISPV(1,2),VSPV(1)
   1  2   0.0              ISPV(2,1),ISPV(2,2),VSPV(2)
   5  1   0.0              ISPV(3,1),ISPV(3,2),VSPV(3)
   0                       NSSV
   0                       NNBC
   0                       NMPC

        SOLUTION:
```

No. of Elements	$w(L)$	$\phi(L)$
Timoshenko (RIE) element		
2	0.78281E-02	-0.31275E-02
4	0.13291E-01	-0.34389E-02
8	0.14100E-01	-0.34052E-02
Euler-Bernoulli (EBE) element		
2	0.14323E-01	-0.33854E-02

PROPRIETARY MATERIAL. ©The McGraw-Hill Companies, Inc. All rights reserved.

Problem 7.27: Repeat Problem 7.26 using the CIE Timoshenko element.

Solution: The input data file and the results are summarized in Box P7.27.

Box P7.27: Input and summary of the results for Problem 7.27.

```
PROBLEM 5.11: BENDING OF A BEAM (CIE Timoshenko element)
   2   2  0                MODEL, NTYPE, ITEM
   1   4                   IELEM, NEM
   1   1                   ICONT, NPRNT
   0.0    2.5  2.5  2.5  2.5      DX(I)
  16.0E8  0.0              AX0, AX1
   4.0E6  0.0              BX0, BX1
   0.0    0.0              CX0, CX1
 400.0    0.0  0.0         FX0,FX1,FX2
   3                       NSPV
   1  1   0.0              ISPV(1,1),ISPV(1,2),VSPV(1)
   1  2   0.0              ISPV(2,1),ISPV(2,2),VSPV(2)
   3  1   0.0              ISPV(3,1),ISPV(3,2),VSPV(3)
   0                       NSSV
   0                       NNBC
   0                       NMPC
```

$EI = 4 \times 10^6$ N – m

$GAK_s = \dfrac{4EI}{H^2}, \; H = 0.1$

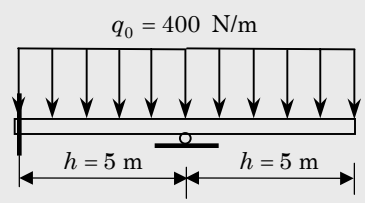

No. of Ele	$w(L)$	$\phi(L)$
Timoshenko (CIE) element		
L2	0.52219E-02	-0.20854E-02
L4	0.12380E-01	-0.31263E-02
L8	0.13859E-01	-0.33246E-02
Euler-Bernoulli (EBE) element		
2	0.14323E-01	-0.33854E-02

PROPRIETARY MATERIAL. ©The McGraw-Hill Companies, Inc. All rights reserved.

Note: Numerous other circular plate problems can be assigned using a variation of loads and boundary conditions as well as the type of element used.

Problem 7.28: Analyze a clamped circular plate under a uniformly distributed transverse load using the Euler–Bernoulli plate element. Investigate the convergence using 2, 4 and 8 elements by comparing with the exact solution (from Reddy, 2002)

$$w(r) = \frac{q_0 a^4}{64D}\left[1 - \left(\frac{r}{a}\right)^2\right]^2$$

where $D = EH^3/12(1-\nu^2)$, q_0 is the intensity of the distributed load, a is the radius of the plate, H is its thickness, and ν is Poisson's ratio ($\nu = 0.25$). Tabulate the center deflection.

Solution: The input data file and the results are summarized in Box P7.28. Note that the slope at $r = 0$ need not be specified (to be zero); the results show that it is indeed zero. The exact center deflection is $w(0) = 0.17578$ (times $q_0 a^4/D$).

Box P7.28: Input and partial output for Problem 7.28.

```
     PROBLEM 7.28: BENDING OF A CLAMPED CIRCULAR PLATE (EBE)
        3   1  0                MODEL, NTYPE, ITEM
        0   4                   IELEM, NEM
        1   1                   ICONT, NPRNT
        0.0    0.25  0.25  0.25  0.25        DX(I)
        1.0    1.0              AX0(E1), AX1(E2)  (E1=E2=E)
        0.25   1.0              BX0(ν), BX1(H)  (H=thickness)
        0.0    0.0              CX0, CX1
        1.0    0.0  0.0         FX0,FX1,FX2
        2                       NSPV
        5  1   0.0              ISPV(1,1),ISPV(1,2),VSPV(1)
        5  2   0.0              ISPV(2,1),ISPV(2,2),VSPV(2)
        0                       NSSV
        0                       NNBC
        0                       NMPC

 SOLUTION (values of PVs) at the NODES:
N = 2
 0.17613E+00 -0.61141E-02  0.99182E-01  0.26295E+00  0.00000E+00
 0.00000E+00
N = 4
 0.17581E+00 -0.76427E-03  0.15453E+00  0.16468E+00  0.98897E-01
 0.26362E+00  0.33656E-01  0.23069E+00  0.00000E+00  0.00000E+00
N = 8
 0.17578E+00 -0.95533E-04  0.17033E+00  0.86502E-01  0.15450E+00
 0.16479E+00  0.12982E+00  0.22659E+00  0.98878E-01  0.26367E+00
 0.65275E-01  0.26779E+00  0.33646E-01  0.23071E+00  0.96563E-02
 0.14419E+00  0.00000E+00  0.00000E+00
```

PROPRIETARY MATERIAL. ©The McGraw-Hill Companies, Inc. All rights reserved.

Problem 7.29: Repeat Problem 7.28 with the RIE Timoshenko plate elements for $a/H = 10$. Use 4 and 8 linear elements and 2 and 4 quadratic elements and tabulate the center deflection. Take $E = 10^7$, $\nu = 0.25$ and $K_s = 5/6$. The exact solution is (see page 403 of Reddy, 2002)

$$w(r) = \frac{q_0 a^4}{64D}\left[1 - \left(\frac{r}{a}\right)^2\right]^2 + \frac{q_0 a^2}{4K_s GH}\left[1 - \left(\frac{r}{a}\right)^2\right]$$

Solution: We have $G = 0.4 \times 10^7$. The input data file and the results are summarized in Box P7.29. The exact center deflection is $w(0) = 0.18328 \times 10^{-4}$ (the contribution due to shear is 0.0075×10^{-4}).

Box P7.29: Typical input file and summary of results for Problem 7.29.

```
 PROBLEM 7.29: BENDING OF A CLAMPED CIRCULAR POLATE (RIE)
    2   1  0               MODEL, NTYPE, ITEM
    2   2                  IELEM, NEM
    1   1                  ICONT, NPRNT
    0.0    0.5  0.5        DX(I)
    1.0E7  1.0E7           AX0(E1), AX1(E2) (E1 = E2 = E)
    0.25   0.1             BX0 (nu), BX1(H)  (H = thickness)
    0.0    0.0             CX0, CX1
    1.0    0.0  0.333333E7 FX0,FX1,FX2(G)   (G = shear modulus)
    2                      NSPV
    5  1   0.0             ISPV(1,1),ISPV(1,2),VSPV(1)
    5  2   0.0             ISPV(2,1),ISPV(2,2),VSPV(2)
    0                      NSSV
    0                      NNBC
    0                      NMPC

SOLUTION at the NODES (Only first row is listed):

N = 4L
0.18549E-04  0.83705E-06  0.16092E-04  0.18316E-04  0.10136E-04

N = 2Q
0.18462E-04 -0.13787E-05  0.16268E-04  0.17021E-04  0.10529E-04

N = 8L
0.18382E-04  0.10463E-06  0.17798E-04  0.89928E-05  0.16141E-04

N = 4Q
0.18339E-04 -0.17233E-06  0.17782E-04  0.87171E-05  0.16161E-04

N = 8Q
0.18329E-04 -0.21542E-07  0.18189E-04  0.43855E-05  0.17772E-04
```

PROPRIETARY MATERIAL. ©The McGraw-Hill Companies, Inc. All rights reserved.

7.30 Repeat Problem 7.29 with the Timoshenko plate element (CIE) (and linear elements) for $a/H = 10$.

Solution: The input data files and the results for the generalized displacements are presented in Box P7.30.

Box P7.30: Input files and solutions for Problem 7.30.

```
PROBLEM 7.30: BENDING OF A CLAMPED CIRCULAR POLATE (CIE)
   2   3  0               MODEL, NTYPE, ITEM
   1   4                  IELEM, NEM
   1   1                  ICONT, NPRNT
   0.0    0.25  0.25  0.25  0.25        DX(I)
   1.0E7  1.0E7           AX0(E1), AX1(E2) (E1 = E2 = E)
   0.25   0.1             BX0 (nu), BX1(H)  (H = thickness)
   0.0    0.0             CX0, CX1
   1.0    0.0  0.333333E7 FX0,FX1,FX2(G)   (G = shear modulus)
   2                      NSPV
   5  1   0.0             ISPV(1,1),ISPV(1,2),VSPV(1)
   5  2   0.0             ISPV(2,1),ISPV(2,2),VSPV(2)
   0                      NSSV
   0                      NNBC
   0                      NMPC


 SOLUTION (values of PVs) at the NODES:
 0.17820E-04  0.41853E-06  0.15546E-04  0.17274E-04  0.98484E-05
 0.27143E-04  0.32742E-05  0.23551E-04  0.00000E+00  0.00000E+00


 PROBLEM 7.30: BENDING OF A CLAMPED CIRCULAR POLATE (CIE)
    2   3  0               MODEL, NTYPE, ITEM
    1   8                  IELEM, NEM
    1   1                  ICONT, NPRNT
    0.0    0.125  0.125  0.125  0.125
           0.125  0.125  0.125  0.125        DX(I)
    1.0E7  1.0E7           AX0(E1), AX1(E2) (E1 = E2 = E)
    0.25   0.1             BX0 (nu), BX1(H)  (H = thickness)
    0.0    0.0             CX0, CX1
    1.0    0.0  0.333333E7 FX0,FX1,FX2(G)   (G = shear modulus)
    2                      NSPV
    9  1   0.0             ISPV(1,1),ISPV(1,2),VSPV(1)
    9  2   0.0             ISPV(2,1),ISPV(2,2),VSPV(2)
    0                      NSSV
    0                      NNBC
    0                      NMPC

 SOLUTION (values of PVs) at the NODES:
 0.18200E-04  0.52316E-07  0.17631E-04  0.87989E-05  0.16002E-04
 0.16672E-04  0.13472E-04  0.22863E-04  0.10301E-04  0.26558E-04
 0.68510E-05  0.26941E-04  0.35886E-05  0.23190E-04  0.10813E-05
 0.14484E-04  0.00000E+00  0.00000E+00
```

PROPRIETARY MATERIAL. ©The McGraw-Hill Companies, Inc. All rights reserved.

Problem 7.31: Consider an annular plate of outer radius a and an inner radius b, and thickness H. If the plate is simply supported at the outer edge and subjected to a uniformly distributed load q_0 (see Fig. P7.31), analyze the problem using the Euler–Bernoulli plate element. Compare the four-element solution with the analytical solution (from Reddy, 2002)

$$
\begin{aligned}
w &= \frac{q_0 a^4}{64D}\left\{-1+\left(\frac{r}{a}\right)^4+\frac{2\alpha_1}{1+\nu}\left[1-\left(\frac{r}{a}\right)^2\right]-\frac{4\alpha_2\beta^2}{1-\nu}\log\left(\frac{r}{a}\right)\right\}\\
\alpha_1 &= (3+\nu)(1-\beta^2)-4(1+\nu)\beta^2\kappa, \quad \alpha_2 = (3+\nu)+4(1+\nu)\kappa\\
\kappa &= \frac{\beta^2}{1-\beta^2}\log\beta, \quad \beta=\frac{b}{a}, \quad D=\frac{EH^3}{12(1-\nu^2)}
\end{aligned}
$$

where E is the modulus of elasticity, H the thickness and ν Poisson's ratio. Take $E = 10^7$, $\nu = 0.3$ and $b/a = 0.25$.

Figure P7.31

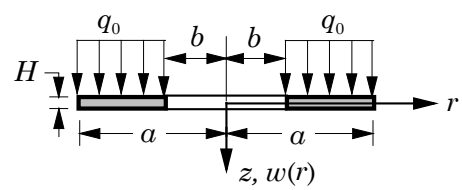

Solution: The input data files and the results for the generalized displacements are presented in Box P7.31. The exact displacement is $w(b) = 0.83(q_0 a^4/EH^3)$.

Box P7.31: Input files and solutions for Problem 7.31.

```
PROBLEM 7.31: BENDING OF A SIMPLY SUPPORTED ANNULAR PLATE (EBE)
   3   1  0                MODEL, NTYPE, ITEM
   0   4                   IELEM, NEM
   1   1                   ICONT, NPRNT
   0.25   0.1875  0.1875  0.1875  0.1875        DX(I)
   1.0E7  1.0E7           AX0(E1), AX1(E2)  (E1=E2=E)
   0.3    0.1             BX0(nu), BX1(H)
   0.0    0.0             CX0, CX1
   1.0    0.0  0.0        FX0,FX1,FX2
   1                      NSPV
   5  1   0.0             ISPV(1,1),ISPV(1,2),VSPV(1)
   0                      NSSV
   0                      NNBC
   0                      NMPC

 SOLUTION (values of PVs) at the NODES:

 0.82921E-04  0.10390E-03  0.64116E-04  0.10140E-03  0.44172E-04
 0.11162E-03  0.22433E-04  0.11923E-03  0.00000E+00  0.11826E-03
```

PROPRIETARY MATERIAL. ©The McGraw-Hill Companies, Inc. All rights reserved.

Problem 7.32: Repeat Problem 7.31 with (a) four linear elements and (b) two quadratic Timoshenko (RIE) elements for $a/H = 10$.

Solution: The input data files and the results for the generalized displacements are presented in Box P7.32.

Box P7.32: Input files and solutions for Problem 7.32.

```
 PROBLEM 7.32: BENDING OF A SIMPLY SUPPORTED ANNULAR PLATE (TBT)
    2   1  0                MODEL, NTYPE, ITEM
    1   4                   IELEM, NEM
    1   1                   ICONT, NPRNT
    0.25   0.1875 0.1875 0.1875 0.1875    DX(I)
    1.0E7  1.0E7            AX0(E1), AX1(E2)  (E1=E2=E)
    0.3    0.1              BX0(nu), BX1(H)
    0.0    0.0              CX0, CX1
    1.0    0.0  0.3205E7    FX0,FX1,FX2
    1                       NSPV
    5  1   0.0              ISPV(1,1),ISPV(1,2),VSPV(1)
    0                       NSSV
    0                       NNBC
    0                       NMPC

  SOLUTION (values of PVs) at the NODES:

  0.83203E-04  0.10260E-03  0.64048E-04  0.10118E-03  0.44010E-04
  0.11126E-03  0.22294E-04  0.11840E-03  0.00000E+00  0.11678E-03


 PROBLEM 7.32: BENDING OF A SIMPLY SUPPORTED ANNULAR PLATE (TBT)
    2   1  0                MODEL, NTYPE, ITEM
    2   2                   IELEM, NEM
    1   1                   ICONT, NPRNT
    0.25   0.375  0.375     DX(I)
    1.0E7  1.0E7            AX0(E1), AX1(E2)  (E1=E2=E)
    0.3    0.1              BX0(ν), BX1(H)
    0.0    0.0              CX0, CX1
    1.0    0.0  0.3205E7    FX0,FX1,FX2
    1                       NSPV
    5  1   0.0              ISPV(1,1),ISPV(1,2),VSPV(1)
    0                       NSSV
    0                       NNBC
    0                       NMPC

  SOLUTION (values of PVs) at the NODES:

  0.83278E-04  0.10253E-03  0.64321E-04  0.10110E-03  0.44482E-04
  0.11114E-03  0.22589E-04  0.11895E-03  0.00000E+00  0.11792E-03
```

PROPRIETARY MATERIAL. ©The McGraw-Hill Companies, Inc. All rights reserved.

Problems 7.33–7.47: Analyze the truss problems in Figures P4.38–P4.44 and frame problems in Figures P5.28–P5.35.

Solution to Problem 7.33: We have ($\sin\theta_1 = \cos\theta_1 = 1/\sqrt{2}$) for element 1 and ($\sin\theta_2 = 0.8944, \cos\theta_2 = -0.4472$) for element 2. The input data file and the edited output are presented in Box P7.33.

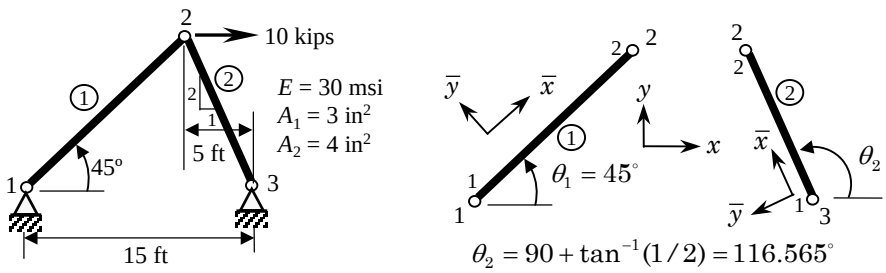

Figure P7.33

Box P7.33: Input files and solutions for Problem 7.33.

```
Problem 4.38: ANALYSIS OF A PLANE TRUSS
4  0  0                                    MODEL, NTYPE, ITEM
0  2                                       IELEM, NEM
0  1                                       ICONT, NPRNT
   3                                       NNM
30.E6 169.70563  3.0  0.7071  0.7071 0.0  SE, SL, SA, CS, SN, HF
   1    2                                  NOD(1,I) - Element 1
30.E6 134.16408  4.0 -0.4472  0.8944 0.0  Element 2
   3    2
   4                                       NSPV
   1    1    0.0 )
   1    2    0.0 }                        ISPV, VSPV
   3    1    0.0 }
   3    2    0.0 )
   1                                       NSSV
   2    1   10.0E3                        ISSV, VSSV
   0                                       NNBC
   0                                       NMPC
  SOLUTION (values of PVs) at the NODES:
  0.00000E+00  0.00000E+00  0.22973E-01  0.21690E-02  0.00000E+00
  0.00000E+00

       Generalized forces in the element coordinates
   (second line gives the results in the global coordinates)
 ____________________________________________________________
 Ele  Force, H1   Force, V1   Force, H2  Force, V2
 ____________________________________________________________
  1 -0.9428E+04  0.0000E+00  0.9428E+04  0.0000E+00
    -0.6667E+04 -0.6667E+04  0.6667E+04  0.6667E+04
  2  0.7453E+04  0.0000E+00 -0.7453E+04  0.0000E+00
    -0.3333E+04  0.6667E+04  0.3333E+04 -0.6667E+04
```

PROPRIETARY MATERIAL. ©The McGraw-Hill Companies, Inc. All rights reserved.

Solution to Problem 7.34: The input data file and the edited output are presented in Box P7.34.

$\theta_1 = 51.34^\circ$, $\theta_2 = 0^\circ$, $\theta_3 = 129.81^\circ$

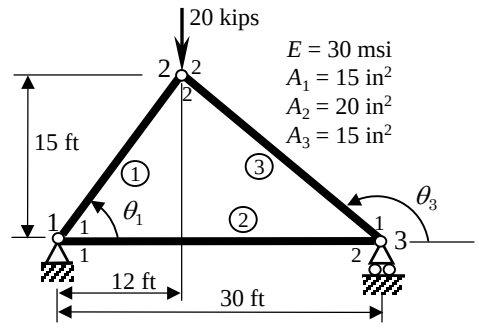

Figure P7.34

Box P7.34: Input files and solutions for Problem 7.34.

```
Problem 4.39: ANALYSIS OF A PLANE TRUSS
   4  0  0                                    MODEL, NTYPE, ITEM
   0  3                                       IELEM, NEM
   0  2                                       ICONT, NPRNT
      3                                       NNM
   30.E6 230.5125 15.0  0.6247  0.78087  0.0 SE,SL,SA,CS,SN,HF
      1    2                                  NOD(1,I)
   30.E6 360.0    20.0  1.0     0.0      0.0
      1    3
   30.E6 281.169  15.0 -0.7682  0.6402   0.0
      3    2
      3                                       NSPV
      1    1    0.0
      1    2    0.0                          ISPV, VSPV
      3    2    0.0
      1                                       NSSV
      2    2   -20.0E3                       ISSV, VSSV
      0                                       NNBC
      0                                       NMPC
SOLUTION (values of PVs) at the NODES:
0.00000E+00  0.00000E+00  0.45136E-02 -0.13692E-01  0.57599E-02
0.00000E+00

         Generalized forces in the element coordinates
     (second line gives the results in the global coordinates)
_____________________________________________________________
   Ele  Force, H1   Force, V1   Force, H2  Force, V2
_____________________________________________________________
    1  0.1537E+05 -0.1819E-11 -0.1537E+05  0.1819E-11
       0.9600E+04  0.1200E+05 -0.9600E+04 -0.1200E+05
    2 -0.9600E+04  0.0000E+00  0.9600E+04  0.0000E+00
      -0.9600E+04  0.0000E+00  0.9600E+04  0.0000E+00
    3  0.1250E+05  0.0000E+00 -0.1250E+05  0.0000E+00
      -0.9600E+04  0.8000E+04  0.9600E+04 -0.8000E+04
_____________________________________________________________
```

PROPRIETARY MATERIAL. ©The McGraw-Hill Companies, Inc. All rights reserved.

Solution to Problem 7.35: The input data file and the edited output are presented in Box P7.35.

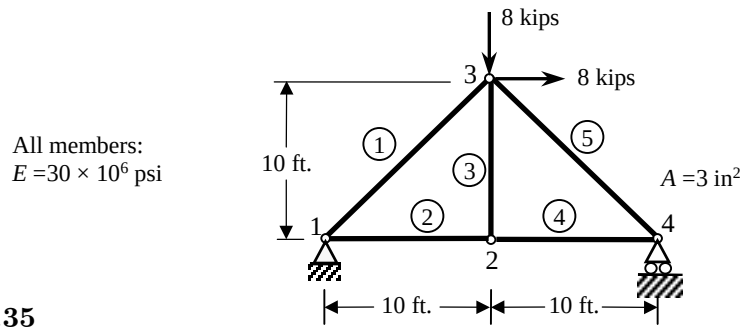

Figure P7.35

Box P7.35: Input files and solutions for Problem 7.35.

```
Problem 4.40: ANALYSIS OF A PLANE TRUSS
   4  0  0                                    MODEL, NTYPE, ITEM
   1  5                                       IELEM, NEM
   0  1                                       ICONT, NPRNT
      4                                       NNM
   30.E6 169.70563 3.0  0.7071  0.7071 0.0    SE,SL,SA,CS,SN,HF
      1    3                                  NOD(1,I)
   30.E6 120.00    3.0  1.0     0.0    0.0
      1    2
   30.E6 120.00    3.0  0.0     1.0    0.0
      2    3
   30.E6 120.00    3.0  1.0     0.0    0.0
      2    4
   30.E6 169.70563 3.0  0.7071 -0.7071 0.0
      3    4                                  NOD(1,I)
      3                                       NSPV
      1    1    0.0
      1    2    0.0                          ISPV, VSPV
      4    2    0.0
      2                                       NSSV
      3    1    8.0E3                        ISSV, VSSV
      3    2   -8.0E3                        ISSV, VSSV
      0                                       NNBC
      0                                       NMPC

SOLUTION (values of PVs) at the NODES:
0.00000E+00  0.00000E+00  0.10667E-01 -0.25752E-01  0.25752E-01
-0.25752E-01  0.21333E-01  0.00000E+00
 ____________________________________________________
   Ele  Force, H1   Force, V1   Force, H2  Force, V2
 ____________________________________________________

    2 -0.8000E+04  0.0000E+00  0.8000E+04  0.0000E+00
      -0.8000E+04  0.0000E+00  0.8000E+04  0.0000E+00
    4 -0.8000E+04  0.0000E+00  0.8000E+04  0.0000E+00
      -0.8000E+04  0.0000E+00  0.8000E+04  0.0000E+00
    5  0.1131E+05  0.0000E+00 -0.1131E+05  0.0000E+00
       0.8000E+04 -0.8000E+04 -0.8000E+04  0.8000E+04
```

PROPRIETARY MATERIAL. © The McGraw-Hill Companies, Inc. All rights reserved.

Solution to Problem 7.36: The input data file and the edited output are presented in Box P7.36.

$\theta_1 = 0^\circ, \ \theta_2 = 90^\circ, \ \theta_3 = 45^\circ$

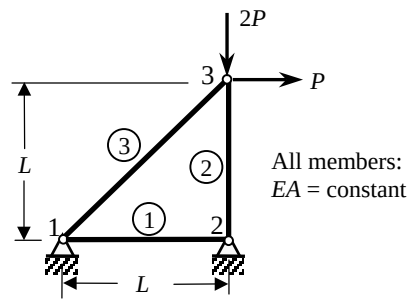

Figure P7.36

Box P7.36: Input files and solutions for Problem 7.36.

```
Problem 4.41: ANALYSIS OF A PLANE TRUSS
   4  0  0                                    MODEL, NTYPE, ITEM
   1  3                                       IELEM, NEM
   0  1                                       ICONT, NPRNT
      3                                       NNM
   10.E6 1.0     1.0  1.0    0.0    0.0       SE,SL,SA,CS,SN,HF
      1    2                                  NOD(1,I)
   10.E6 1.0     1.0  0.0    1.0    0.0
      2    3
   10.E6 1.414   1.0  0.707  0.707  0.0
      1    3
      4                                       NSPV
      1    1    0.0
      1    2    0.0                          ISPV, VSPV
      2    1    0.0
      2    2    0.0
      2                                       NSSV
      3    1    1.0E3                        ISSV, VSSV
      3    2   -2.0E3                        ISSV, VSSV
      0                                       NNBC
      0                                       NMPC
 SOLUTION (values of PVs) at the NODES:

  0.00000E+00  0.00000E+00  0.00000E+00  0.00000E+00  0.58289E-03
 -0.30000E-03

     Ele  Force, H1   Force, V1   Force, H2  Force, V2

      1  0.0000E+00  0.0000E+00  0.0000E+00  0.0000E+00
         0.0000E+00  0.0000E+00  0.0000E+00  0.0000E+00
      2  0.3000E+04  0.0000E+00 -0.3000E+04  0.0000E+00
         0.0000E+00  0.3000E+04  0.0000E+00 -0.3000E+04
      3 -0.1414E+04  0.0000E+00  0.1414E+04  0.0000E+00
        -0.1000E+04 -0.1000E+04  0.1000E+04  0.1000E+04
```

PROPRIETARY MATERIAL. ©The McGraw-Hill Companies, Inc. All rights reserved.

Solution to Problem 7.37: The input data file and the edited output are presented in Box P7.37.

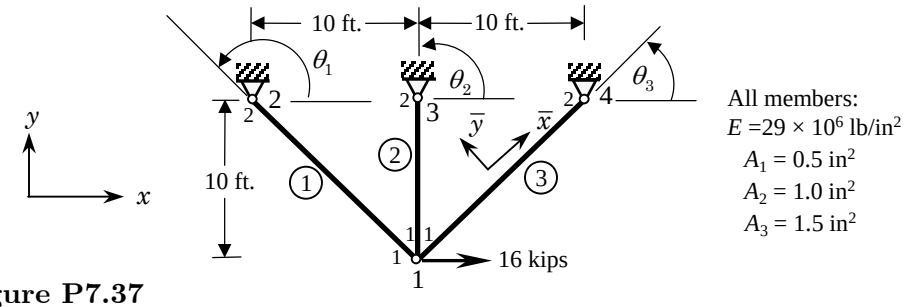

Figure P7.37

Box P7.37: Input files and solutions for Problem 7.37.

```
 Problem 4.42: ANALYSIS OF A PLANE TRUSS
    4  0  0                                    MODEL, NTYPE, ITEM
    1  3                                       IELEM, NEM
    0  1                                       ICONT, NPRNT
       4                                       NNM
    10.E6 1.414   0.5  -0.707  0.707  0.0      SE,SL,SA,CS,SN,HF
       1    2                                  NOD(1,I)
    10.E6 1.0     1.0   0.0    1.0    0.0
       1    3
    10.E6 1.414   1.5   0.707  0.707  0.0
       1    4
       6                                       NSPV
       2    1    0.0
       2    2    0.0                          ISPV, VSPV
       3    1    0.0
       3    2    0.0
       4    1    0.0
       4    2    0.0
       1                                       NSSV
       1    1    1.6E4                        ISSV, VSSV
       0                                       NNBC
       0                                       NMPC
SOLUTION (values of PVs) at the NODES:

0.25245E-02 -0.52279E-03  0.00000E+00  0.00000E+00  0.00000E+00
0.00000E+00  0.00000E+00  0.00000E+00

  ------------------------------------------------------------
   Ele  Force, H1   Force, V1   Force, H2  Force, V2
  ------------------------------------------------------------

    1 -0.7616E+04  0.0000E+00  0.7616E+04  0.0000E+00
       0.5386E+04 -0.5386E+04 -0.5386E+04  0.5386E+04
    2 -0.5228E+04  0.0000E+00  0.5228E+04  0.0000E+00
       0.0000E+00 -0.5228E+04  0.0000E+00  0.5228E+04
    3  0.1501E+05  0.0000E+00 -0.1501E+05  0.0000E+00
       0.1061E+05  0.1061E+05 -0.1061E+05 -0.1061E+05
```

PROPRIETARY MATERIAL. ©The McGraw-Hill Companies, Inc. All rights reserved.

Solution to Problem 7.38: The input data file and the edited output are presented in Box P7.38.

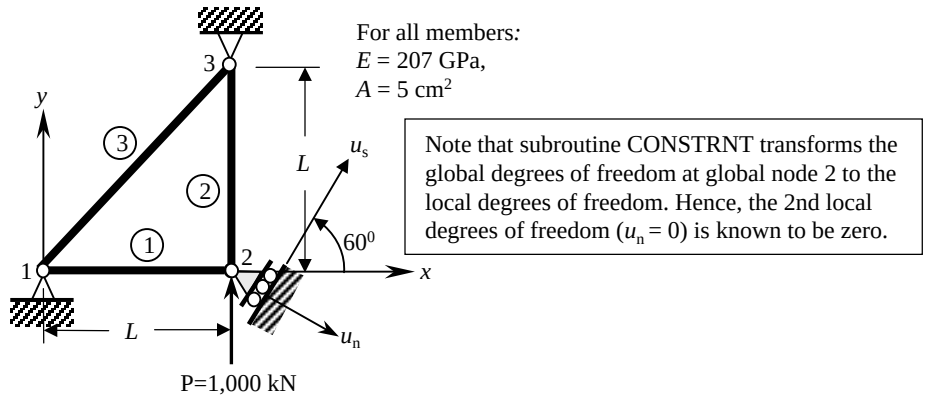

Figure P7.38

Box P7.38: Input files and solutions for Problem 7.38.

```
Problem 4.43: ANALYSIS OF A PLANE TRUSS WITH INCLINED SUPPORT
   4  0  0                                MODEL, NTYPE, ITEM
   1  3                                   IELEM, NEM
   0  2                                   ICONT, NPRNT
      3                                   NNM
207.0E9 1.0    0.5E-03  1.0    0.0    0.0 SE, SL, SA, CS, SN, HF
   1    2                                 NOD(1,I)
207.0E9 1.0    0.5E-03  0.0    1.0    0.0 SE, SL, SA, CS, SN, HF
   2    3                                 NOD(2,I)
207.0E9 1.4142 0.5E-03  0.7071 0.7071 0.0 SE, SL, SA, CS, SN, HF
   1    3                                 NOD(3,I)
      1                                   NCON
      2    60.0                           ICON(1), VCON(1)
      5                                   NSPV
      1    1    0.0                      ISPV(1,1),ISPV(1,2),VSPV(1)
      1    2    0.0                      ISPV(2,1),ISPV(2,2),VSPV(2)
      2    2    0.0                      ISPV(3,1),ISPV(3,2),VSPV(3)
      3    1    0.0                      ISPV(4,1),ISPV(4,2),VSPV(4)
      3    2    0.0                      ISPV(5,1),ISPV(5,2),VSPV(5)
      1                                   NSSV
      2    1    0.866E6                  ISSV(1,1),ISSV(1,2),VSSV(1)
      0                                   NNBC
      0                                   NMPC


SOLUTION (values of PVs) at the NODES:
   0.00000E+00  0.00000E+00  0.83671E-02  0.00000E+00  0.00000E+00
   0.00000E+00
```

PROPRIETARY MATERIAL. ©The McGraw-Hill Companies, Inc. All rights reserved.

Solution to Problem 7.39: The input data file and the edited output are presented in Box P7.39.

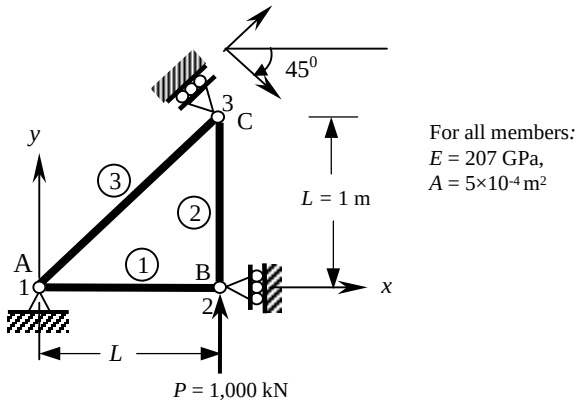

Figure P7.39

Box P7.39: Input files and solutions for Problem 7.39.

```
 Problem 4.44: ANALYSIS OF A PLANE TRUSS WITH INCLINED SUPPORT
    4  0  0                              MODEL, NTYPE, ITEM
    1  3                                 IELEM, NEM
    0  2                                 ICONT, NPRNT
       3                                 NNM
 207.0E9 1.0    0.5E-3 1.0    0.0    0.0 SE, SL, SA, CS, SN, HF
    1  2                                 NOD(1,I)
 207.0E9 1.0    0.5E-3 0.0    1.0    0.0 SE, SL, SA, CS, SN, HF
    2  3                                 NOD(2,I)
 207.0E9 1.4142 0.5E-3 0.7071 0.7071 0.0 SE, SL, SA, CS, SN, HF
    1  3                                 NOD(1,I)
    1                                    NCON
    3    45.0                            ICON(1), VCON(1)
    4                                    NSPV
    1    1    0.0                   ISPV(1,1),ISPV(1,2),VSPV(1)
    1    2    0.0                   ISPV(2,1),ISPV(2,2),VSPV(2)
    2    1    0.0                   ISPV(3,1),ISPV(3,2),VSPV(3)
    3    2    0.0                   ISPV(4,1),ISPV(4,2),VSPV(4)
    1                                    NSSV
    2    2    1.0E6                 ISSV(1,1),ISSV(1,2),VSSV(1)
    0                                    NNBC
    0                                    NMPC

SOLUTION (values of PVs) at the NODES:

0.00000E+00  0.00000E+00  0.00000E+00  0.16494E-01  0.96619E-02
0.00000E+00
```

PROPRIETARY MATERIAL. ©The McGraw-Hill Companies, Inc. All rights reserved.

Solution to Problem 7.40: The input data file and the edited output are presented in Box P7.40.

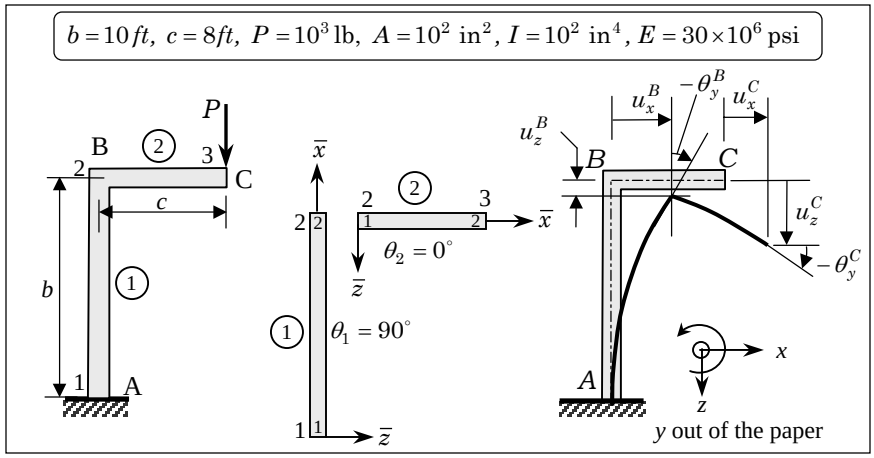

Figure P7.40

Box P7.40: Input files and solutions for Problem 7.40.

```
Problem 5.28:  ANALYSIS OF A PLANE FRAME of Prob 5.6  (E-B element)
   4  1  0                                    MODEL, NTYPE, ITEM
   0  2                                       IELEM, NEM
   0  2                                       ICONT, NPRNT
   3                                          NNM
   0.3   3.0E7  120.0   1.0E2  1.0E2 0.0 -1.0  PR,SE,SL,SA,SI,CS,SN
   0.0   0.0            0.0    0.0   0.0  0.0  HF,VF,PF,XB,CST,SNT
   1     2                                    NOD(1,J)
   0.3   3.0E7   96.0   1.0E2  1.0E2 1.0  0.0
   0.0   0.0            0.0    0.0   0.0  0.0  Element 2
   2     3
   0                                          NCON
   3                                          NSPV
   1     1    0.0                             ISPV(1,J), VSPV(1)
   1     2    0.0                             ISPV(2,J), VSPV(2)
   1     3    0.0                             ISPV(3,J), VSPV(3)
   1                                          NSSV
   3     2    1.0E3                           ISSV(1,J), VSSV(1)
   0                                          NNBC
   0                                          NMPC
   SOLUTION (values of PVs) at the NODES:

   0.00000E+00  0.00000E+00  0.00000E+00  0.23040E+00  0.40000E-04
  -0.38400E-02  0.23040E+00  0.46698E+00 -0.53760E-02
```

PROPRIETARY MATERIAL. ©The McGraw-Hill Companies, Inc. All rights reserved.

Solution to Problem 7.41: The input data file and the edited output are presented in Box P7.41.

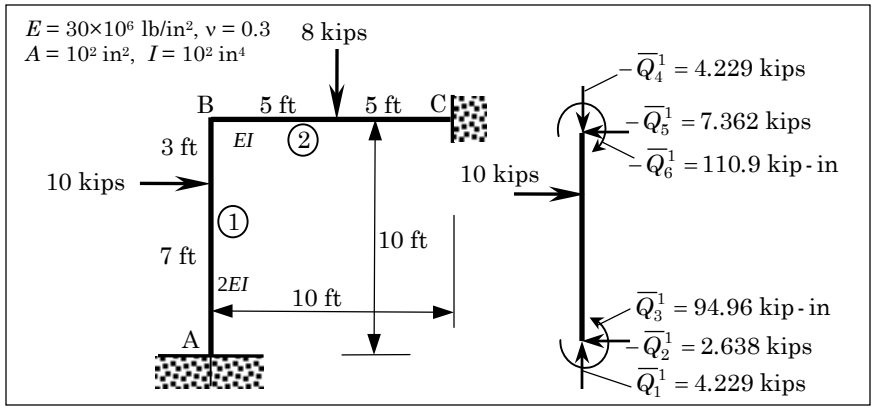

Figure P7.41

Box P7.41: Input files and solutions for Problem 7.41.

```
Problem 5.29:  ANALYSIS OF A PLANE FRAME  (E-B element)
4  1  0                                   MODEL, NTYPE, ITEM
0  2                                      IELEM, NEM
0  2                                      ICONT, NPRNT
3                                         NNM
0.3   3.0E7  120.0   1.0E2  2.0E2 0.0 -1.0  PR,SE,SL,SA,SI,CS,SN
0.0   0.0            1.0E4  84.0  0.0  1.0  HF, VF, PF, XB, CST, SNT
1     2                                   NOD(1,J)
0.3   3.0E7  120.0   1.0E2  1.0E2 1.0  0.0
0.0   0.0            8.E3   60.0  0.0  1.0  Element 2
0                                         NCON
2     3
6                                         NSPV
1     1    0.0
1     2    0.0                            ISPV(I,J), VSPV(I)
1     3    0.0
3     1    0.0
3     2    0.0
3     3    0.0
0                                         NSSV
0                                         NNBC
0                                         NMPC
 SOLUTION (values of PVs) at the NODES:

 0.00000E+00  0.00000E+00  0.00000E+00  0.29448E-03  0.16917E-03
 0.18625E-03  0.00000E+00  0.00000E+00  0.00000E+00
```

PROPRIETARY MATERIAL. ©The McGraw-Hill Companies, Inc. All rights reserved.

Solution to Problem 7.42: The input data file and the edited output are presented in Box P7.42.

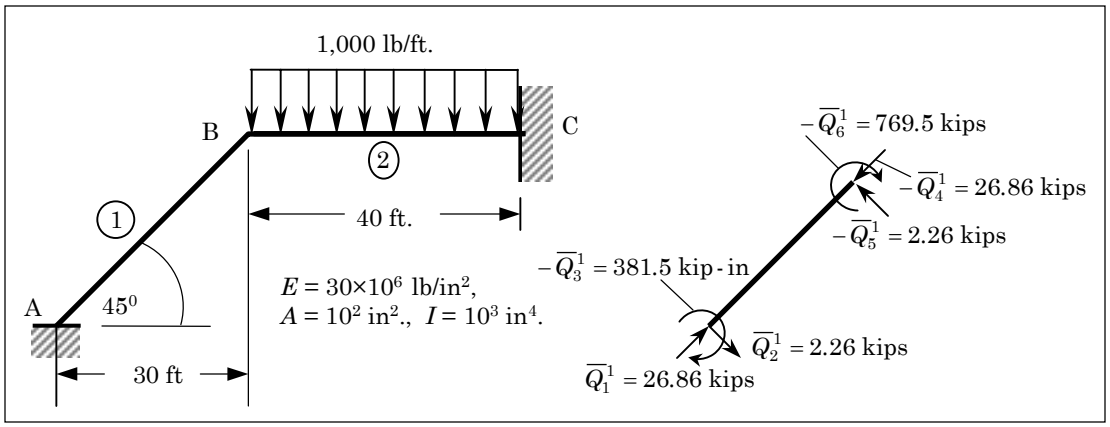

Figure P7.42

Box P7.42: Input files and solutions for Problem 7.42.

```
Problem 5.30:  ANALYSIS OF A PLANE FRAME  (E-B element)
4  1  0                                   MODEL, NTYPE, ITEM
0  2                                      IELEM, NEM
0  1                                      ICONT, NPRNT
3                                         NNM
0.3   3.0E7  509.117   1.0E2  1.0E3 0.7071 -0.7071 PR,SE,SL,SA,SI,CS,SN
0.0   0.0              0.0    0.0   0.0     0.0  HF, VF, PF, XB, CST, SNT
1     2                                   NOD(1,J)
0.3   3.0E7  480.0     1.0E2  1.0E3 1.0  0.0
0.0   83.33333         0.0    0.0   0.0  0.0  Element 2
2     3                                   NOD(2,J)
0                                         NCON
6                                         NSPV
1     1    0.0                            ISPV(1,J), VSPV(1)
1     2    0.0                            ISPV(2,J), VSPV(2)
1     3    0.0                            ISPV(3,J), VSPV(3)
3     1    0.0                            ISPV(4,J), VSPV(4)
3     2    0.0                            ISPV(5,J), VSPV(5)
3     3    0.0                            ISPV(6,J), VSPV(6)
0                                         NSSV
0                                         NNBC
0                                         NMPC

 SOLUTION (values of PVs) at the NODES:
  0.00000E+00  0.00000E+00  0.00000E+00  0.32950E-02  0.97423E-02
 -0.32917E-02  0.00000E+00  0.00000E+00  0.00000E+00
```

PROPRIETARY MATERIAL. ©The McGraw-Hill Companies, Inc. All rights reserved.

Solution to Problem 7.43: The input data file and the edited output are presented in Box P7.43.

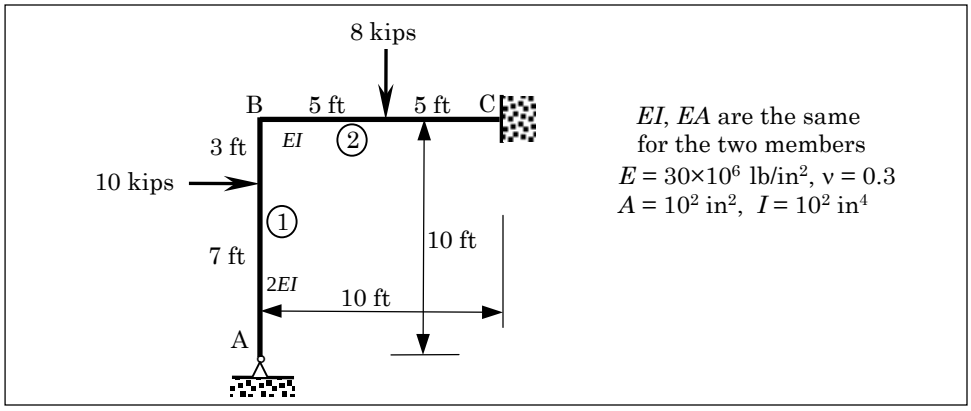

Figure P7.43

Box P7.43: Input files and solutions for Problem 7.43.

```
Problem 5.31:  ANALYSIS OF A PLANE FRAME  (E-B element)
4  1  0                                    MODEL, NTYPE, ITEM
0  2                                       IELEM, NEM
0  1                                       ICONT, NPRNT
3                                          NNM
0.3   3.0E7  120.0   1.0E2  2.0E2 0.0 -1.0  PR,SE,SL,SA,SI,CS,SN
0.0   0.0            1.0E4  84.0  0.0  1.0  HF,VF,PF,XB,CST,SNT
1     2                                    NOD(1,J)
0.3   3.0E7  120.0   1.0E2  1.0E2 1.0  0.0
0.0   0.0            8.E3   60.0  0.0  1.0  Element 2
2     3
0                                          NCON
5                                          NSPV
1     1    0.0
1     2    0.0                            ISPV(I,J), VSPV(I)
3     1    0.0
3     2    0.0
3     3    0.0
0                                          NSSV
0                                          NNBC
0                                          NMPC

SOLUTION (values of PVs) at the NODES:

0.00000E+00  0.00000E+00 -0.57017E-03  0.33246E-03  0.17865E-03
0.37603E-03  0.00000E+00  0.00000E+00  0.00000E+00
```

PROPRIETARY MATERIAL. ©The McGraw-Hill Companies, Inc. All rights reserved.

Solution to Problem 7.44: The input data file and the edited output are presented in Box P7.44.

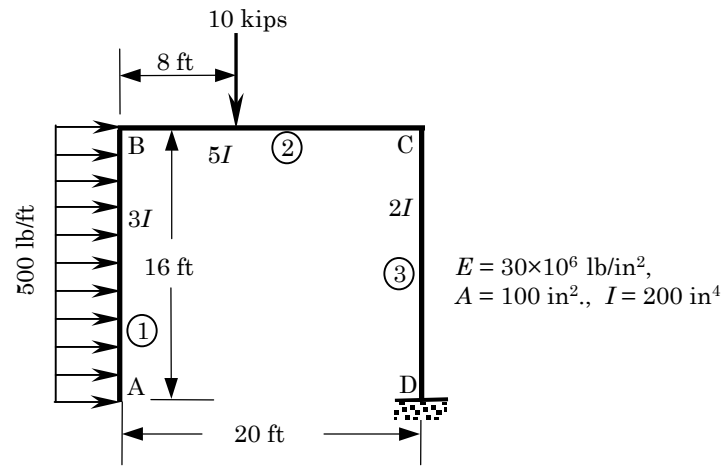

Figure P7.44

Box P7.44: Input files and solutions for Problem 7.44.

```
Problem 5.32:  ANALYSIS OF A PLANE FRAME  (E-B element)
4  1  0                                   MODEL, NTYPE, ITEM
0  3                                      IELEM, NEM
0  1                                      ICONT, NPRNT
4                                         NNM
0.3   30.0E6  192.0    100.0E0   600.0E0  0.0  -1.0 PR,SE,SL,SA,SI,CS,SN
0.0   41.6667   0.0    0.0         0.0    1.0  HF, VF, PF, XB, CST, SNT
1     2                                   NOD(1,J)
0.3   30.0E6  240.0    100.0E0   1000.0E0  1.0  0.0
0.0   0.0              1.0E4       96.0    0.0  1.0  Element 2
2     3
0.3   30.0E6  192.0    100.0E0   400.0E0  0.0  1.0
0.0   0.0                0.0       0.0    0.0  0.0  Element 3
3     4
0                                         NCON
3                                         NSPV
4     1    0.0                            ISPV(I,J), VSPV(I)
4     2    0.0                            ISPV(I,J), VSPV(I)
4     3    0.0                            ISPV(I,J), VSPV(I)
0                                         NSSV
0                                         NNBC
  SOLUTION (values of PVs) at the NODES:

  0.48421E+01  0.69311E+01  0.35371E-01 -0.18180E+01  0.69311E+01
  0.32640E-01 -0.18186E+01  0.64000E-03  0.23040E-01  0.00000E+00
  0.00000E+00  0.00000E+00
```

PROPRIETARY MATERIAL. ©The McGraw-Hill Companies, Inc. All rights reserved.

Solution to Problem 7.45: The input data file and the edited output are presented in Box P7.45.

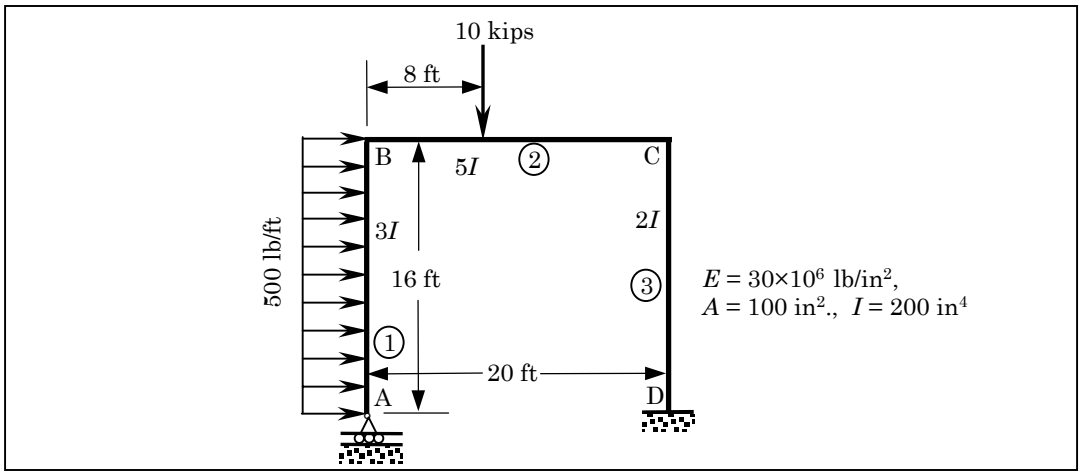

Figure P7.45

Box P7.45: Input files and solutions for Problem 7.45.

```
Problem 5.33:  ANALYSIS OF A PLANE FRAME  (E-B element)
4  1  0                                   MODEL, NTYPE, ITEM
0  3                                      IELEM, NEM
0  1                                      ICONT, NPRNT
4                                         NNM
0.3   30.0E6  192.0    100.0E0   600.0E0  0.0  -1.0 PR,SE,SL,SA,SI,CS,SN
0.0   41.6667   0.0    0.0         0.0    1.0  HF, VF, PF, XB, CST, SNT
1     2                                   NOD(1,J)
0.3   30.0E6  240.0    100.0E0   1000.0E0  1.0  0.0
0.0   0.0              1.0E4       96.0    0.0  1.0  Element 2
2     3
0.3   30.0E6  192.0    100.0E0   400.0E0  0.0  1.0
0.0   0.0                0.0       0.0    0.0  0.0  Element 3
3     4
0                                         NCON
4                                         NSPV
1     2    0.0                            ISPV(I,J), VSPV(I)
4     1    0.0                            ISPV(I,J), VSPV(I)
4     2    0.0                            ISPV(I,J), VSPV(I)
4     3    0.0                            ISPV(I,J), VSPV(I)
0                                         NSSV
0                                         NNBC
0                                         NMPC

   SOLUTION (values of PVs) at the NODES:

   0.12780E+01  0.00000E+00  0.44321E-02  0.55810E+00  0.41251E-03
   0.17014E-02  0.55746E+00  0.22749E-03 -0.17109E-02  0.00000E+00
   0.00000E+00  0.00000E+00
```

PROPRIETARY MATERIAL. ©The McGraw-Hill Companies, Inc. All rights reserved.

Solution to Problem 7.46: The input data file and the edited output are presented in Box P7.46.

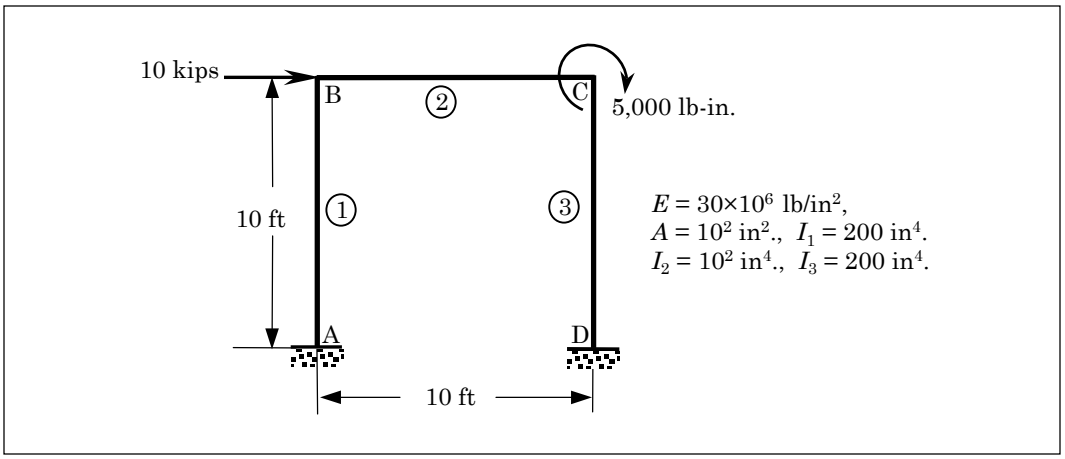

Figure P7.46

Box P7.46: Input files and solutions for Problem 7.46.

```
Problem 5.34:  ANALYSIS OF A PLANE FRAME  (E-B element)
4  1  0                                   MODEL, NTYPE, ITEM
0  3                                      IELEM, NEM
0  1                                      ICONT, NPRNT
4                                         NNM
0.3   30.0E6  120.0    10.0E0   200.0E0  0.0  -1.0 PR,SE,SL,SA,SI,CS,SN
0.0    0.0      0.0     0.0       0.0    0.0  HF, VF, PF, XB, CST, SNT
1     2                                   NOD(1,J)
0.3   30.0E6  120.0    10.0E0   100.0E0  1.0  0.0
0.0    0.0              0.0       0.0    0.0  1.0  Element 2
2     3
0.3   30.0E6  120.0    10.0E0   200.0E0  0.0  1.0
0.0    0.0              0.0       0.0    0.0  0.0  Element 3
3     4
0                                         NCON
6                                         NSPV
1     1    0.0                            ISPV(I,J), VSPV(I)
1     2    0.0                            ISPV(I,J), VSPV(I)
1     3    0.0                            ISPV(I,J), VSPV(I)
4     1    0.0                            ISPV(I,J), VSPV(I)
4     2    0.0                            ISPV(I,J), VSPV(I)
4     3    0.0                            ISPV(I,J), VSPV(I)
2                                         NSSV
2     1    1.0E4                          ISPV(I,J), VSPV(I)
3     3    5.0E3                          ISPV(I,J), VSPV(I)
0                                         NNBC
0                                         NMPC
SOLUTION (values of PVs) at the NODES:
   0.00000E+00  0.00000E+00  0.00000E+00  0.21136E+00 -0.14813E-02
  -0.15260E-02  0.20936E+00  0.14813E-02 -0.14860E-02  0.00000E+00
   0.00000E+00  0.00000E+00
```

PROPRIETARY MATERIAL. © The McGraw-Hill Companies, Inc. All rights reserved.

Solution to Problem 7.47: The input data file and the edited output are presented in Box P7.47.

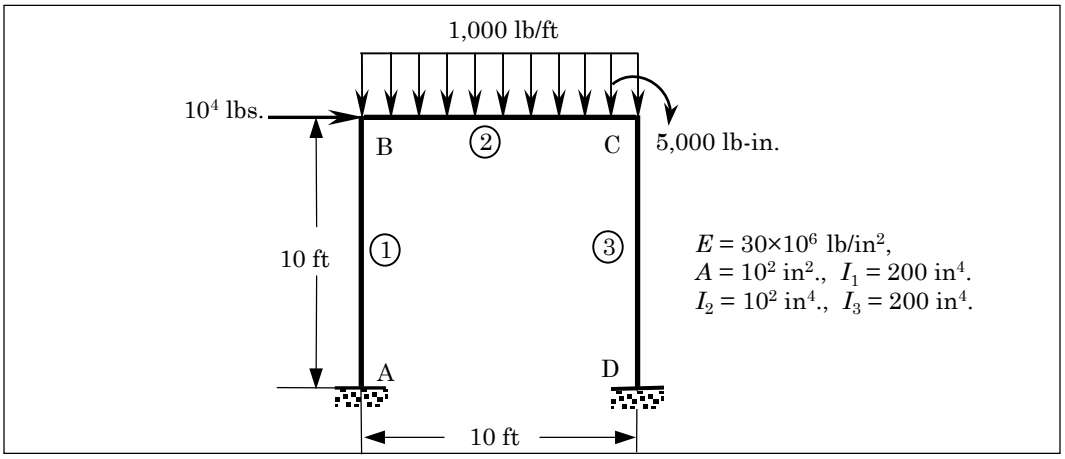

Figure P7.47

Box P7.47: Input files and solutions for Problem 7.47.

```
Problem 5.35:  ANALYSIS OF A PLANE FRAME  (E-B element)
4  1  0                                   MODEL, NTYPE, ITEM
0  3                                      IELEM, NEM
0  1                                      ICONT, NPRNT
4                                         NNM
0.3   30.0E6  120.0    10.0E0   200.0E0  0.0  -1.0 PR,SE,SL,SA,SI,CS,SN
0.0    0.0      0.0     0.0       0.0    0.0  HF, VF, PF, XB, CST, SNT
1     2                                   NOD(1,J)
0.3   30.0E6  120.0    10.0E0   100.0E0  1.0  0.0
0.0   1.0E3              0.0       0.0   0.0  1.0  Element 2
2     3
0.3   30.0E6  120.0    10.0E0   200.0E0  0.0  1.0
0.0    0.0              0.0       0.0    0.0  0.0  Element 3
3     4
0                                         NCON
6                                         NSPV
1     1    0.0                            ISPV(I,J), VSPV(I)
1     2    0.0                            ISPV(I,J), VSPV(I)
1     3    0.0                            ISPV(I,J), VSPV(I)
4     1    0.0                            ISPV(I,J), VSPV(I)
4     2    0.0                            ISPV(I,J), VSPV(I)
4     3    0.0                            ISPV(I,J), VSPV(I)
2                                         NSSV
2     1    1.0E4                          ISPV(I,J), VSPV(I)
3     3    5.0E3                          ISPV(I,J), VSPV(I)
0                                         NNBC
0                                         NMPC
 SOLUTION (values of PVs) at the NODES:
    0.00000E+00  0.00000E+00  0.00000E+00  0.21375E+00  0.22519E-01
   -0.63500E-02  0.20697E+00  0.25481E-01  0.33379E-02  0.00000E+00
    0.00000E+00  0.00000E+00
```

PROPRIETARY MATERIAL. © The McGraw-Hill Companies, Inc. All rights reserved.

Problem 7.48: Consider the axial motion of an elastic bar, governed by the second-order equation

$$EA\frac{\partial^2 u}{\partial x^2} = \rho A\frac{\partial^2 u}{\partial t^2} \quad \text{for } 0 < x < L$$

with the following data: length of bar $L = 500$ mm, cross-sectional area $A = 1$ mm^2, modulus of elasticity $E = 20,000$ N/mm^2, density $\rho = 0.008$ N s^2/mm^4, boundary conditions

$$u(0,t) = 0, \quad EA\frac{\partial u}{\partial x}(L,t) = 1$$

and zero initial conditions. Using 20 linear elements and $\Delta t = 0.002$ s, determine the axial displacement and plot the displacement as a function of position along the bar for $t = 0.8$ s.

Solution: The input file and edited output (axial displacements at various selected times) are given in Box P7.48. Note that the program prints the displacements, velocities, and accelerations for hyperbolic equations.

Box P7.48: Input files and solutions for Problem 7.48.

```
Problem 7.48: Transient response of an elastic bar
1   0   2                        MODEL,NTYPE,ITEM
1  20                            IELEM,NEM
1   0                            ICONT,NPRNT
  0.0  25.0  25.0  25.0  25.0  25.0  25.0  25.0  25.0
       25.0  25.0  25.0  25.0  25.0  25.0  25.0  25.0
       25.0  25.0  25.0  25.0    DX(I)
  2.0E4   0.0                    AX0,AX1
  0.0     0.0                    BX0,BX1
  0.0     0.0                    CX0,CX1
  0.0     0.0     0.0            FX0,FX1,FX2
 1                               NSPV
 1   1    0.0                    ISPV(1,1),ISPV(1,2),VSPV(1)
 1                               NSSV
21   1    1.0                    ISSV(1,1),ISSV(1,2),VSSV(1)
0                                NNBC
0                                NMPC
8.0E-3    0.0                    CT0,CT1
2.0E-3    0.5     0.5            DT,ALFA,GAMA
0  500    100                    INCOND,NTIME,INTVL

TIME =  0.2000E+00     Time step number =100
SOLUTION (values of PVs) at the NODES:

 0.00000E+00  0.54697E-04 -0.11854E-03  0.54311E-04  0.23066E-03
-0.27094E-03 -0.35672E-03  0.90447E-04  0.92344E-03  0.21507E-02
 0.32665E-02  0.46103E-02  0.57717E-02  0.70923E-02  0.82894E-02
 0.95755E-02  0.10804E-01  0.12064E-01  0.13312E-01  0.14558E-01
 0.15815E-01
```

PROPRIETARY MATERIAL. ©The McGraw-Hill Companies, Inc. All rights reserved.

(**Box P7.48** is continued from the previous page)

```
TIME =  0.4000E+00     Time step number =200
SOLUTION (values of PVs) at the NODES:
0.00000E+00  0.25152E-02  0.49542E-02  0.75113E-02  0.98158E-02
0.12230E-01  0.14123E-01  0.15857E-01  0.16947E-01  0.17861E-01
0.18926E-01  0.20205E-01  0.21843E-01  0.22921E-01  0.23977E-01
0.25404E-01  0.26695E-01  0.27797E-01  0.29160E-01  0.30362E-01
0.31627E-01

TIME =  0.6000E+00     Time step number =300
SOLUTION (values of PVs) at the NODES:
0.00000E+00  0.24959E-02  0.50120E-02  0.74687E-02  0.10062E-01
0.12422E-01  0.15041E-01  0.17537E-01  0.19948E-01  0.22424E-01
0.25204E-01  0.27415E-01  0.29841E-01  0.32590E-01  0.35123E-01
0.37533E-01  0.39684E-01  0.42012E-01  0.44590E-01  0.46702E-01
0.48523E-01

TIME =  0.8000E+00     Time step number =400
SOLUTION (values of PVs) at the NODES:
0.00000E+00  0.27337E-02  0.50497E-02  0.72729E-02  0.96550E-02
0.12536E-01  0.15603E-01  0.18000E-01  0.20246E-01  0.22282E-01
0.23973E-01  0.25203E-01  0.26784E-01  0.27938E-01  0.29259E-01
0.30492E-01  0.31760E-01  0.33008E-01  0.34236E-01  0.35533E-01
0.36722E-01

TIME =  0.1000E+01     Time step number =500
SOLUTION (values of PVs) at the NODES:
0.00000E+00  0.83400E-04  0.27476E-03  0.48860E-03  0.10348E-02
0.17282E-02  0.28598E-02  0.42818E-02  0.58028E-02  0.74425E-02
0.87185E-02  0.98499E-02  0.10740E-01  0.12112E-01  0.13345E-01
0.14705E-01  0.16259E-01  0.17082E-01  0.18217E-01  0.19728E-01
0.21149E-01
```

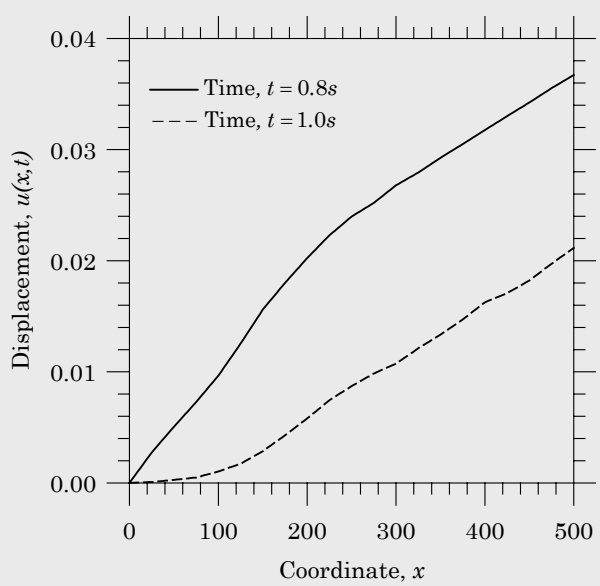

PROPRIETARY MATERIAL. © The McGraw-Hill Companies, Inc. All rights reserved.

Problem 7.49: Consider the following nondimensionalized differential equation governing the plane wall transient:

$$-\frac{\partial^2 T}{\partial x^2} + \frac{\partial T}{\partial t} = 0 \quad \text{for } 0 < x < 1$$

with boundary conditions $T(0,t) = 1$ and $T(1,t) = 0$, and initial condition $T(x,0) = 0$. Solve the problem using eight linear elements. Determine the critical time step; solve the problem using the Crank-Nicholson method and $\Delta t = 0.002$ s.

Solution: The critical time step can be determined by solving the associated eigenvalue problem. The input file and edited output for the eigenvalue problem is presented here. The maximum eigenvalue is $\lambda_{max} = 686.512$. Hence, the critical time step is $\Delta t_{crit} = 2.9 \times 10^{-3}$. The input data file and selective output for the transient analysis with $\Delta t = 2.0 \times 10^{-3}$ are also presented. The exact solution is given by

$$u(x,t) = 1 - x - \frac{2}{\pi} \sum_{n=1}^{\infty} \frac{\sin\ n\pi x\ e^{-n^2\pi^2 t}}{n}$$

Box P7.49: Input files and solutions for Problem 7.49.

```
Problem 7.49a: Eigenvalue analysis of the heat transfer problem
    1  0  3       MODEL, NTYPE, ITEM
    1  8          IELEM, NEM
    1  0          ICONT, NPRNT
    0.0  0.125 0.125 0.125 0.125 0.125 0.125 0.125 0.125 DX(I)
    1.0 0.0       AX0, AX1
    0.0 0.0       BX0, BX1
    0.0 0.0       CX0, CX1
    2             NSPV
    1   1         ISPV(1,1), ISPV(1,2)
    9   1         ISPV(2,1), ISPV(2,2)
    0             NNBC
    0             NMPC
    1.0 0.0       CT0, CT1

   EIGENVALUE( 1) =   0.686512E+03  SQRT(EGNVAL) =   0.26201E+02
   EIGENVALUE( 2) =   0.328291E+03  SQRT(EGNVAL) =   0.18119E+02
   EIGENVALUE( 3) =   0.999708E+01  SQRT(EGNVAL) =   0.31618E+01
   EIGENVALUE( 4) =   0.192000E+03  SQRT(EGNVAL) =   0.13856E+02
   EIGENVALUE( 5) =   0.507025E+03  SQRT(EGNVAL) =   0.22517E+02
   EIGENVALUE( 6) =   0.415466E+02  SQRT(EGNVAL) =   0.64457E+01
   EIGENVALUE( 7) =   0.994885E+02  SQRT(EGNVAL) =   0.99744E+01
```

PROPRIETARY MATERIAL. ©The McGraw-Hill Companies, Inc. All rights reserved.

(**Box P7.49** is continued from the previous page)

```
Problem 7.49b: TRANSIENT HEAT CONDUCTION IN A PLANE WALL
  1  0  1                                    MODEL, NTYPE, ITEM
  1  8                                       IELEM, NEM
  1  1                                       ICONT, NPRNT
    0.0    0.125  0.125  0.125  0.125
           0.125  0.125  0.125  0.125        DX(I)
    1.0  0.0                                 AX0, AX1
    0.0  0.0                                 BX0, BX1
    0.0  0.0                                 CX0, CX1
    0.0  0.0   0.0                           FX0,FX1,FX2
  2                                          NSPV
  1  1   1.0                                 ISPV(1,J), VSPV(1)
  9  1   0.0                                 ISPV(2,J), VSPV(2)
    0                                        NSSV
    0                                        NNBC
    0                                        NMPC
    1.0   0.0                                CT0, CT1
    0.002 0.5   0.0                          DT, ALFA, GAMA
    0     200   10                           INCOND, NTIME, INTVL

 TIME =  0.2000E-01     Time step number = 10
 SOLUTION (values of PVs) at the NODES:
 0.10000E+01  0.52569E+00  0.19606E+00  0.43344E-01  0.20180E-02
-0.12904E-02 -0.83545E-04  0.63020E-04  0.00000E+00

 TIME =  0.4000E-01     Time step number = 20
 SOLUTION (values of PVs) at the NODES:
 0.10000E+01  0.65658E+00  0.37170E+00  0.17678E+00  0.68208E-01
 0.20148E-01  0.40103E-02  0.33287E-03  0.00000E+00

 TIME =  0.6000E-01     Time step number = 30
 SOLUTION (values of PVs) at the NODES:
 0.10000E+01  0.71722E+00  0.46795E+00  0.27461E+00  0.14317E+00
 0.65341E-01  0.25560E-01  0.79606E-02  0.00000E+00

 TIME =  0.8000E-01     Time step number = 40
 SOLUTION (values of PVs) at the NODES:
 0.10000E+01  0.75404E+00  0.53042E+00  0.34574E+00  0.20739E+00
 0.11348E+00  0.55508E-01  0.21775E-01  0.00000E+00

 TIME =  0.1000E+00     Time step number = 50
 SOLUTION (values of PVs) at the NODES:
 0.10000E+01  0.77941E+00  0.57507E+00  0.39973E+00  0.26035E+00
 0.15745E+00  0.85990E-01  0.37138E-01  0.00000E+00

 TIME =  0.2000E+00     Time step number =100
 SOLUTION (values of PVs) at the NODES:
 0.10000E+01  0.84119E+00  0.68756E+00  0.54346E+00  0.41181E+00
 0.29359E+00  0.18773E+00  0.91312E-01  0.00000E+00
```

PROPRIETARY MATERIAL. ©The McGraw-Hill Companies, Inc. All rights reserved.

Note: Modify program **FEM1D** to solve Problems 7.50–7.52 (solutions to these problems are not presented here for obvious reasons).

Problem 7.50: Consider a simply supported beam of length L subjected to a point load

$$P(t) = \begin{cases} P_0 \sin \frac{\pi t}{\tau} & \text{for } 0 \le t \le \tau \\ 0 & \text{for } t \ge \tau \end{cases}$$

at a distance c from the left end of the beam (assumed to be at rest at $t = 0$). The transverse deflection $w(x,t)$ is given by [see Harris and Crede (1961), p. 8–53]

$$w(x,t) = \begin{cases} \frac{2P_0L^3}{\pi^4 EI} \sum_{i=1}^{\infty} \frac{1}{i^4} \sin \frac{i\pi c}{L} \sin \frac{i\pi x}{L} \left[\frac{1}{1-T_i^2/4\tau^2} \left(\sin \frac{\pi t}{\tau} - \frac{T_i}{2\tau} \sin \omega_i t \right) \right], & 0 \le t \le \tau \\ \frac{2P_0L^3}{\pi^4 EI} \sum_{i=1}^{\infty} \frac{1}{i^4} \sin \frac{i\pi c}{L} \sin \frac{i\pi x}{L} \left[\frac{\frac{T_i}{\tau} \cos \frac{\pi\tau}{T_i}}{T_i^2/4\tau^2 - 1} \sin \omega_i (t - \frac{1}{2}\tau) \right], & t \ge \tau \end{cases}$$

where

$$T_i = \frac{2\pi}{\omega_i} = \frac{2L^2}{i^2\pi} \sqrt{\frac{A\rho}{EI}} = \frac{T_1}{i^2}$$

Use the data $P_0 = 1000$ lb, $\tau = 20 \times 10^{-6}$ s, $L = 30$ in, $E = 30 \times 10^6$ lb/in^2, $\rho = 733 \times 10^{-6}$ lb/in^3, $\Delta t = 10^{-6}$ s, and assume that the beam is of square cross-section of 0.5 in by 0.5 in. Using five Euler–Bernoulli beam elements in the half-beam, obtain the finite element solution and compare with the series solution at midspan for the case $c = \frac{L}{2}$.

Problem 7.51: Repeat Problem 7.50 for $c = \frac{1}{4}L$ and eight elements in the full span.

Problem 7.52: Repeat Problem 7.50 for $P(t) = P_0$ at midspan and eight elements in the full span.

Problem 7.53: Consider a cantilevered beam with a point load P_0 at the free end. Using the data of Problem 7.50, find the finite element solution for the transverse deflection using eight Euler–Bernoulli beam elements.

Solution: We have the following data:

$$EI = (30 \times 10^6)\frac{1}{192} = 0.15625 \times 10^6 \text{ lb-in}^2$$
$$\rho A = (733 \times 10^{-6})(0.25) = 1.8325 \times 10^{-4} \text{ lb/in}$$

The input file and edited output (generalized displacements at various selected times) are presented in Box P7.51.

PROPRIETARY MATERIAL. © The McGraw-Hill Companies, Inc. All rights reserved.

Box P7.53: Input files and solutions for Problem 7.53.

```
   Problem 7.53: TRANSIENT RESPONSE OF A CANTILEVER BEAM (EBT)
   3  0  2                                  MODEL, NTYPE, ITEM
   0  8                                     IELEM, NEM
   1  0                                     ICONT, NPRNT
     0.0  3.75  3.75  3.75  3.75  3.75  3.75
          3.75  3.75                        DX(I)
     0.0  0.0                               AX0, AX1
     0.15625E6  0.0                         BX0, BX1
     0.0  0.0                               CX0, CX1
     0.0  0.0   0.0                         FX0, FX1, FX2
     2                                      NSPV
   1  1   0.0                               ISPV(1,J), VSPV(1)
   1  2   0.0                               ISPV(2,J), VSPV(2)
   1                                        NSSV
   9  1   1.0E3                             ISSV(1,J), VSSV(1)
   0                                        NNBC
   0                                        NMPC
   1.8325E-4    0.0                         CT0, CT1
   1.0E-6  0.5  0.5                         DT, ALFA, GAMA
   0      51    5                           INCOND,NTIME,INTVL

 TIME =  0.5000E-05     Time step number =  5
 SOLUTION (values of PVs) at the NODES:
 0.00000E+00  0.00000E+00  0.91461E-08 -0.21328E-07  0.28851E-07
-0.90666E-07  0.10261E-06 -0.33033E-06  0.36887E-06 -0.11899E-05
 0.13275E-05 -0.42823E-05  0.48128E-05 -0.15451E-04  0.19895E-04
-0.58685E-04  0.24767E-03 -0.42301E-03

 TIME =  0.1000E-04     Time step number = 10
 SOLUTION (values of PVs) at the NODES:
 0.00000E+00  0.00000E+00  0.20758E-07 -0.47220E-07  0.72149E-07
-0.21496E-06  0.27807E-06 -0.84731E-06  0.10743E-05 -0.32909E-05
 0.41341E-05 -0.12706E-04  0.15977E-04 -0.48987E-04  0.70903E-04
-0.19940E-03  0.94584E-03 -0.15764E-02

 TIME =  0.2000E-04     Time step number = 20
 SOLUTION (values of PVs) at the NODES:
 0.00000E+00  0.00000E+00 -0.64801E-07  0.16003E-06 -0.14930E-06
 0.56664E-06 -0.32366E-06  0.14920E-05 -0.33649E-06  0.29516E-05
 0.21294E-05  0.71834E-06  0.21526E-04 -0.37938E-04  0.16598E-03
-0.33932E-03  0.31820E-02 -0.47640E-02

 TIME =  0.4000E-04     Time step number = 40
 SOLUTION (values of PVs) at the NODES:
 0.00000E+00  0.00000E+00  0.28465E-06 -0.77774E-06  0.25473E-06
-0.19349E-05 -0.10556E-05 -0.10096E-05 -0.94392E-05  0.16657E-04
-0.46654E-04  0.11630E-03 -0.17115E-03  0.51888E-03 -0.30740E-03
 0.15506E-02  0.80131E-02 -0.73833E-02
```

PROPRIETARY MATERIAL. ©The McGraw-Hill Companies, Inc. All rights reserved.

(**Box P7.53** is continued from the previous page)

```
 TIME =  0.5000E-04     Time step number = 50
 SOLUTION (values of PVs) at the NODES:
 0.00000E+00  0.00000E+00  0.10765E-05 -0.25410E-05  0.29062E-05
-0.10006E-04  0.70989E-05 -0.29359E-04  0.10348E-04 -0.65956E-04
-0.20299E-04 -0.64495E-04 -0.23771E-03  0.36648E-03 -0.85340E-03
 0.24843E-02  0.10930E-01 -0.81801E-02
```

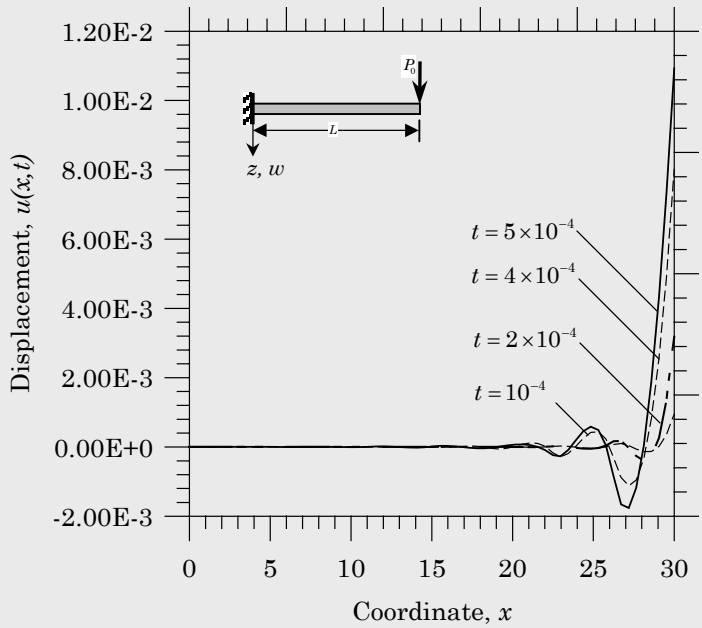

Problem 7.54: Repeat Problem 7.53 for a clamped beam with the load at the midspan.

Solution: The input file and edited output (generalized displacements at various selected times) are presented in Box P7.54. Half-beam model is used because of the symmetry about the center of the beam.

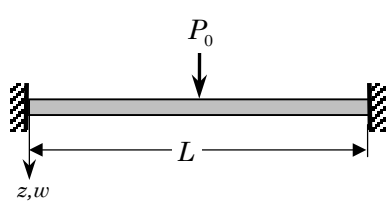

PROPRIETARY MATERIAL. ©The McGraw-Hill Companies, Inc. All rights reserved.

Box P7.54: Input files and solutions for Problem 7.54.

```
Problem 7.54: TRANSIENT RESPONSE OF A CLAMPED BEAM (EBT)
   3  0  2                              MODEL, NTYPE, ITEM
   0  4                                 IELEM, NEM
   1  0                                 ICONT, NPRNT
     0.0  3.75  3.75  3.75  3.75        DX(I)
     0.0  0.0                           AX0, AX1
     0.15625E6  0.0                     BX0, BX1
     0.0  0.0                           CX0, CX1
     0.0  0.0   0.0                     FX0, FX1, FX2
     3                                  NSPV
   1  1   0.0                           ISPV(1,J), VSPV(1)
   1  2   0.0                           ISPV(2,J), VSPV(2)
   5  2   0.0                           ISPV(2,J), VSPV(2)
   1                                    NSSV
   5  1   0.5E3                         ISSV(1,J), VSSV(1)
   0                                    NNBC
   0                                    NMPC
   1.8325E-4    0.0                     CT0, CT1
   1.0E-6  0.5  0.5                     DT, ALFA, GAMA
   0      51    5                       INCOND, NTIME, INTVL

 TIME =  0.5000E-05     Time step number =  5
 SOLUTION (values of PVs) at the NODES:
 0.00000E+00  0.00000E+00 -0.45624E-06  0.10645E-05 -0.14270E-05
 0.45087E-05 -0.43840E-05  0.15584E-04  0.30854E-04  0.00000E+00

 TIME =  0.1000E-04     Time step number = 10
 SOLUTION (values of PVs) at the NODES:
 0.00000E+00  0.00000E+00 -0.16363E-05  0.37590E-05 -0.54434E-05
 0.16620E-04 -0.17606E-04  0.60291E-04  0.12258E-03  0.00000E+00

 TIME =  0.2000E-04     Time step number = 20
 SOLUTION (values of PVs) at the NODES:
 0.00000E+00  0.00000E+00 -0.38667E-05  0.80521E-05 -0.17751E-04
 0.46017E-04 -0.71250E-04  0.21054E-03  0.47758E-03  0.00000E+00

 TIME =  0.4000E-04     Time step number = 40
 SOLUTION (values of PVs) at the NODES:
 0.00000E+00  0.00000E+00  0.98896E-05 -0.28949E-04 -0.18782E-04
-0.29683E-04 -0.28350E-03  0.46693E-03  0.17445E-02  0.00000E+00

 TIME =  0.5000E-04     Time step number = 50
 SOLUTION (values of PVs) at the NODES:
 0.00000E+00  0.00000E+00  0.25132E-04 -0.60873E-04  0.15157E-04
-0.16284E-03 -0.42440E-03  0.43318E-03  0.25796E-02  0.00000E+00
```

PROPRIETARY MATERIAL. ©The McGraw-Hill Companies, Inc. All rights reserved.

Problem 7.55: Repeat Problem 7.54 using four linear Timoshenko beam elements. Use $\nu = 0.3$.

Solution: The input file and edited output (generalized displacements at various selected times) are presented in Box P7.55.

Box P7.55: Input files and solutions for Problem 7.55.

```
Problem 7.55: TRANSIENT RESPONSE OF A CLAMPED BEAM (TBT)
   2  0  2                            MODEL, NTYPE, ITEM
   1  4                               IELEM, NEM
   1  0                               ICONT, NPRNT
     0.0  3.75  3.75  3.75  3.75      DX(I)
     2.40385E6  0.0                   AX0(GAK), AX1
     0.15625E6  0.0                   BX0, BX1
     0.0  0.0                         CX0, CX1
     0.0  0.0   0.0                   FX0, FX1, FX2
     3                                NSPV
   1  1   0.0                         ISPV(1,J), VSPV(1)
   1  2   0.0                         ISPV(2,J), VSPV(2)
   5  2   0.0                         ISPV(2,J), VSPV(2)
   1                                  NSSV
   5  1   0.5E3                       ISSV(1,J), VSSV(1)
   0                                  NNBC
   0                                  NMPC
   1.8325E-4    7.6354E-6             CT0, CT1
   1.0E-6  0.5  0.5                   DT, ALFA, GAMA
   0      51    5                     INCOND, NTIME, INTVL

 SOLUTION (values of PVs) at the NODES:

 TIME =  0.5000E-05     Time step number =  5
 0.00000E+00  0.00000E+00 -0.51238E-06 -0.94728E-06  0.21183E-05
 0.23337E-05 -0.81641E-05 -0.39176E-05  0.31142E-04  0.00000E+00

 TIME =  0.1000E-04     Time step number = 10
 0.00000E+00  0.00000E+00 -0.12760E-05 -0.12829E-04  0.68885E-05
 0.27880E-04 -0.30044E-04 -0.38862E-04  0.12140E-03  0.00000E+00

 TIME =  0.4000E-04     Time step number = 40
 0.00000E+00  0.00000E+00  0.21639E-03 -0.18854E-03 -0.22104E-03
 0.51142E-03 -0.91370E-04 -0.70396E-03  0.15301E-02  0.00000E+00

 TIME =  0.5000E-04     Time step number = 50
 0.00000E+00  0.00000E+00  0.41820E-03 -0.22313E-03 -0.46789E-03
 0.71807E-03  0.14228E-04 -0.10481E-02  0.22187E-02  0.00000E+00
```

PROPRIETARY MATERIAL. ©The McGraw-Hill Companies, Inc. All rights reserved.

Problem 7.56: Repeat Problem 7.55 using two quadratic Timoshenko beam elements.

Solution: The input file and edited output (generalized displacements at various selected times) are presented in Box P7.56.

Box P7.56: Input files and solutions for Problem 7.56.

```
 Problem 7.56: TRANSIENT RESPONSE OF A CLAMPED BEAM (TBT)
    2  0  2                            MODEL, NTYPE, ITEM
    2  2                               IELEM, NEM
    1  0                               ICONT, NPRNT
      0.0  7.5   7.5                   DX(I)
      2.40385E6  0.0                   AX0(GAK), AX1
      0.15625E6  0.0                   BX0, BX1
      0.0  0.0                         CX0, CX1
      0.0  0.0   0.0                   FX0, FX1, FX2
      3                                NSPV
    1  1   0.0                         ISPV(1,J), VSPV(1)
    1  2   0.0                         ISPV(2,J), VSPV(2)
    5  2   0.0                         ISPV(2,J), VSPV(2)
    1                                  NSSV
    5  1   0.5E3                       ISSV(1,J), VSSV(1)
    0                                  NNBC
    0                                  NMPC
    1.8325E-4    7.6354E-6             CT0, CT1
    1.0E-6  0.5  0.5                   DT, ALFA, GAMA
    0      51    5                     INCOND, NTIME, INTVL

SOLUTION (values of PVs) at the NODES:

TIME =  0.5000E-05     Time step number =  5
0.00000E+00  0.00000E+00 -0.73758E-06 -0.11769E-05  0.61462E-05
0.39837E-05 -0.53779E-05 -0.34758E-05  0.37961E-04  0.00000E+00

TIME =  0.1000E-04     Time step number = 10
0.00000E+00  0.00000E+00 -0.20092E-05 -0.12355E-04  0.21609E-04
0.38725E-04 -0.19337E-04 -0.31665E-04  0.14708E-03  0.00000E+00

TIME =  0.2000E-04     Time step number = 20
0.00000E+00  0.00000E+00  0.88225E-05 -0.47017E-04  0.45225E-04
0.15869E-03 -0.52794E-04 -0.13197E-03  0.53852E-03  0.00000E+00

TIME =  0.4000E-04     Time step number = 40
0.00000E+00  0.00000E+00  0.19414E-03 -0.79225E-04 -0.20923E-03
0.50082E-03  0.22882E-04 -0.49078E-03  0.16785E-02  0.00000E+00

TIME =  0.5000E-04     Time step number = 50
0.00000E+00  0.00000E+00  0.37179E-03 -0.64309E-04 -0.50744E-03
0.69514E-03  0.15055E-03 -0.73498E-03  0.23851E-02  0.00000E+00
```

PROPRIETARY MATERIAL. ©The McGraw-Hill Companies, Inc. All rights reserved.

Chapter 8

SINGLE-VARIABLE PROBLEMS IN TWO DIMENSIONS

Note: Most of the problems given here require hand calculations only. When four or more simultaneous algebraic equations are to be solved, they should be left in matrix form. New problems can be created by mere change of data and meshes.

Problem 8.1: For a linear triangular element, show that

$$\sum_{i=1}^{3} \alpha_i^e = 2A_e, \quad \sum_{i=1}^{3} \beta_i^e = 0, \quad \sum_{i=1}^{3} \gamma_i^e = 0$$
$$\alpha_i^e + \beta_i^e \hat{x}^e + \gamma_i^e \hat{y}^e = \frac{2}{3} A_e \quad \text{for any} \quad i$$

where

$$\hat{x}^e = \sum_{i=1}^{3} x_i^e, \quad \hat{y}^e = \sum_{i=1}^{3} y_i^e$$

and (x_i^e, y_i^e) are the coordinates of the ith node of the element $(i = 1, 2, 3)$.

Solution: First recall that (element label is omitted)

$$\begin{aligned} 2A_e &= \begin{vmatrix} 1 & x_1 & y_1 \\ 1 & x_2 & y_2 \\ 1 & x_3 & y_3 \end{vmatrix} \\ &= 1 \cdot (x_2 y_3 - x_3 y_2) - 1 \cdot (x_1 y_3 - x_3 y_1) + 1 \cdot (x_1 y_2 - x_2 y_1) \\ &= (x_1 y_2 - x_2 y_1) + (x_2 y_3 - x_3 y_2) + (x_3 y_1 - x_1 y_3) \end{aligned}$$

Then we have

$$\sum_{i=1}^{3} \alpha_i^e = (x_2 y_3 - x_3 y_2) + (x_3 y_1 - x_1 y_3) + (x_1 y_2 - x_2 y_1) = 2A_e$$
$$\sum_{i=1}^{3} \beta_i^e = (y_2 - y_3) + (y_3 - y_1) + (y_1 - y_2) = 0$$

PROPRIETARY MATERIAL. ©The McGraw-Hill Companies, Inc. All rights reserved.

$$\sum_{i=1}^{3} \gamma_i^e = -(x_2 - x_3) - (x_3 - x_1) - (x_1 - x_2) = 0$$

$$\begin{aligned}\alpha_i^e + \beta_i^e \hat{x}^e + \gamma_i^e \hat{y}^e &= (x_2 y_3 - x_3 y_2) + (y_2 - y_3)(x_1 + x_2 + x_3) \\ &\quad - (x_2 - x_3)(y_1 + y_2 + y_3) \\ &= (x_2 y_3 - x_3 y_2) + (y_2 x_1 - y_1 x_2) + (x_3 y_1 - y_3 x_1) \\ &\quad + 2(y_2 x_3 - y_3 x_2)\end{aligned}$$

Problem 8.2: Consider the partial differential equation over a typical element Ω_e with boundary Γ_e

$$-\nabla^2 u + cu = 0 \quad \text{in} \quad \Omega_e, \qquad \text{with} \quad \frac{\partial u}{\partial n} + \beta u = q_n \quad \text{on } \Gamma_e$$

Develop the weak form and finite element model of the equation over an element Ω_e.

Solution: Note that the operators ∇^2 and $\partial/\partial n$ in two dimensions are

$$\nabla^2 = \frac{\partial^2}{\partial x^2} + \frac{\partial^2}{\partial y^2}, \quad \frac{\partial}{\partial n} = n_x \frac{\partial}{\partial x} + n_y \frac{\partial}{\partial y}$$

Following the three-step procedure, the weak form is obtained as

$$0 = \int_{\Omega^e} \left(\frac{\partial w}{\partial x}\frac{\partial u}{\partial x} + \frac{\partial w}{\partial y}\frac{\partial u}{\partial y} + cwu \right) dxdy + \oint_{\Gamma^e} \beta wu ds - \oint_{\Gamma^e} w q_n ds \qquad (i)$$

where w is the weight function. The finite element model is

$$[K^e]\{u^e\} = \{Q^e\} \qquad (ii)$$

where

$$\begin{aligned} K_{ij}^e &= \int_{\Omega^e} \left(\frac{\partial \psi_i}{\partial x}\frac{\partial \psi_j}{\partial x} + \frac{\partial \psi_i}{\partial y}\frac{\partial \psi_j}{\partial y} + c\psi_i\psi_j \right) dxdy + \oint_{\Gamma^e} \beta \psi_i \psi_j ds \\ Q_i^e &= \oint_{\Gamma^e} \psi_i q_n ds \end{aligned} \qquad (iii)$$

Here q_n denotes the flux normal to the element boundary. The problem is one of convective heat transfer type (with $k = 1$, $u_\infty = 0$ and $g = 0$).

Problem 8.3: Assuming that c and β are constant in Problem 8.2, write the element coefficient matrix and source vector for a linear (a) rectangular element and (b) triangular element.

PROPRIETARY MATERIAL. ©The McGraw-Hill Companies, Inc. All rights reserved.

Solution: (a) *Linear Rectangular Element.* The element coefficient matrix is given by $[K^e] = [S^{11}] + [S^{22}] + c[S^{00}] + \beta[H]$ where the matrices $[S^{\alpha\beta}]$ for $\alpha, \beta = 0, 1, 2$ are defined in Eqs. (8.2.52) and (8.5.10a). The source vector is zero.

(b) *Linear Triangular Element.* The element coefficient matrix is given by $[K^e] = [\bar{K}] + c[S^{00}]^e + \beta[H^e]$ where $[\bar{K}]$ is defined by Eq. (8.2.47), $[H^e]$ is given by Eq. (8.5.8a), and $[S^{00}]$ is defined as

$$S_{ij}^{00} = \int_{\Omega^e} \psi_i \psi_j \, dxdy$$

For linear triangular element, the coefficients are given by

$$\begin{aligned} S_{ij}^{00} =& \frac{1}{4A^2} [\alpha_i\alpha_j + (\alpha_i\beta_j + \alpha_j\beta_i)I_{10} + (\alpha_i\gamma_j + \alpha_j\gamma_i)I_{01} + \beta_i\beta_j I_{20} \\ &+ (\beta_i\gamma_j + \beta_j\gamma_i)I_{11} + \gamma_i\gamma_j I_{02}] \end{aligned}$$

where I_{ij} are defined in Eqn. (8.2.40). For a right-angle triangle, $[S^{00}]$ is given by

$$[S^{00}] = \frac{ab}{24} \begin{bmatrix} 2 & 1 & 1 \\ 1 & 2 & 1 \\ 1 & 1 & 2 \end{bmatrix}$$

Problem 8.4: Calculate the linear interpolation functions for the linear triangular and rectangular elements shown in Fig. P8.4.

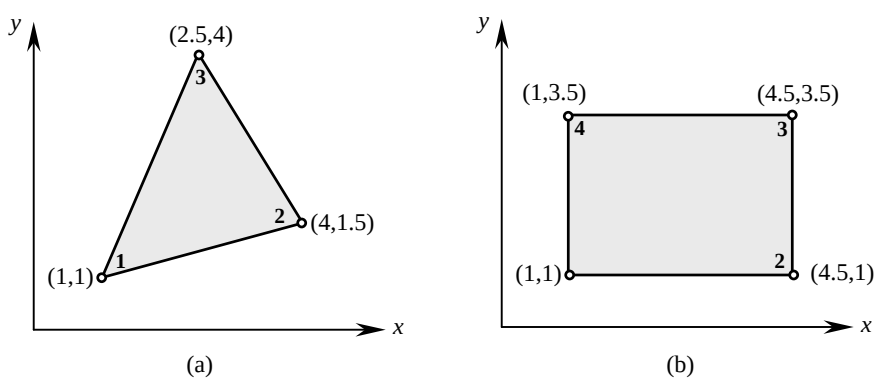

Figure P8.4

Solution: (a) *Triangular Element:* The coefficients α_i, β_i and γ_i for the element shown are:

$$\alpha_1 = 12.25, \ \alpha_2 = -1.5, \ \alpha_3 = -2.5, \ \beta_1 = -2.5, \ \beta_2 = 3.0$$

PROPRIETARY MATERIAL. ©The McGraw-Hill Companies, Inc. All rights reserved.

$$\beta_3 = -0.5,\ \gamma_1 = -1.5,\ \gamma_2 = -1.5,\ \gamma_3 = 3.0$$

The interpolation functions become ($2A = \alpha_1 + \alpha_2 + \alpha_3$)

$$\psi_1 = \frac{1}{8.25}\left(12.25 - 2.5x - 1.5y\right), \quad \psi_2 = \frac{1}{8.25}\left(-1.5 + 3x - 1.5y\right)$$

$$\psi_3 = \frac{1}{8.25}\left(-2.5 - 0.5x + 3y\right)$$

(b) *Rectangular Element:* The interpolation functions can be written directly in terms of the local coordinates $(\bar{x}, \bar{y})$ using the interpolation property

$$\psi_i(\bar{x}_j, \bar{y}_j) = \delta_{ij}$$

For example, consider $\psi_1(\bar{x}, \bar{y})$. It must vanish at nodes 2, 3, and 4. Also, since ψ_1 is a linear function that vanishes at nodes 2 and 3, it should necessarily be zero along the line, $\bar{x} = 3.5$, connecting nodes 2 and 3. Similary, it should be zero along the line $\bar{y} = 2.5$; Thus we have

$$\psi_1(\bar{x}, \bar{y}) = c(3.5 - \bar{x})(2.5 - \bar{y})$$

Since ψ_1 is unity at node 1: $\bar{x} = 0$ and $\bar{y} = 0$, we obtain $c = 1/(3.5)(2.5)$. Thus we have

$$\psi_1 = \left(1 - \frac{\bar{x}}{3.5}\right)\left(1 - \frac{\bar{y}}{2.5}\right)$$

Similarly, we obtain

$$\psi_2 = \frac{\bar{x}}{3.5}\left(1 - \frac{\bar{y}}{2.5}\right), \quad \psi_3 = \frac{\bar{x}}{3.5}\frac{\bar{y}}{2.5}, \quad \psi_4 = \left(1 - \frac{\bar{x}}{3.5}\right)\frac{\bar{y}}{2.5}$$

Problem 8.5: The nodal values of a triangular element in the finite element analysis of a field problem, $-\nabla^2 u = f_0$ are:

$$u_1 = 389.79, \quad u_2 = 337.19, \quad u_3 = 395.08$$

The interpolation functions of the element are given by

$$\psi_1 = \frac{1}{8.25}\left(12.25 - 2.5x - 1.5y\right),\ \psi_2 = \frac{1}{8.25}\left(-1.5 + 3x - 1.5y\right)$$

$$\psi_3 = \frac{1}{8.25}\left(-2.5 - 0.5x + 3y\right)$$

(a) Find the component of the flux in the direction of the vector $4\hat{\mathbf{i}} + 3\hat{\mathbf{j}}$ at $x = 3$ and $y = 2$. (b) A point source of magnitude Q_0 is located at point (x_0, y_0)=(3,2)

PROPRIETARY MATERIAL. ©The McGraw-Hill Companies, Inc. All rights reserved.

inside the triangular element. Determine the contribution of the point source to the element source vector. Express your answer in terms of Q_0.

Solution: (a) The finite element solution u_h and its gradient ∇u_h are given by

$$\begin{aligned} u_h(x,y) &= u_1\psi_1 + u_2\psi_2 + u_3\psi_3 \\ \nabla u_h &= u_1\left(\hat{\mathbf{i}}\frac{\partial\psi_1}{\partial x} + \hat{\mathbf{j}}\frac{\partial\psi_1}{\partial y}\right) + u_2\left(\hat{\mathbf{i}}\frac{\partial\psi_2}{\partial x} + \hat{\mathbf{j}}\frac{\partial\psi_2}{\partial y}\right) + u_3\left(\hat{\mathbf{i}}\frac{\partial\psi_3}{\partial x} + \hat{\mathbf{j}}\frac{\partial\psi_3}{\partial y}\right) \\ &= \frac{389.79}{8.25}\left(-2.5\hat{\mathbf{i}} - 1.5\hat{\mathbf{j}}\right) + \frac{337.19}{8.25}\left(3.0\hat{\mathbf{i}} - 1.5\hat{\mathbf{j}}\right) \\ &\quad + \frac{395.08}{8.25}\left(-0.5\hat{\mathbf{i}} + 3.0\hat{\mathbf{j}}\right) = -19.45\hat{\mathbf{i}} + 11.49\hat{\mathbf{j}} \end{aligned}$$

where $\hat{\mathbf{i}}$ and $\hat{\mathbf{j}}$ are the unit base vectors along the x- and y-coordinates. Note that the gradient of the solution is a constant for a linear triangular element.

(b) The contribution of point source Q_0 to the nodal source vector is

$$f_i = Q_0\psi_i(x_0, y_0) = Q_0\psi_i(3,2); \quad f_1 = 1.75Q_0, \quad f_2 = 4.5Q_0, \quad f_3 = 2Q_0$$

Problem 8.6: The nodal values of an element in the finite-element analysis of a field problem $-\nabla^2 u = f_0$ are $u_1 = 389.79$, $u_2 = 337.19$, and $u_3 = 395.08$ (see Fig. P8.6). (a) Find the gradient of the solution, and (b) Determine where the 392 isoline intersects the boundary of the element in Fig. P8.6.

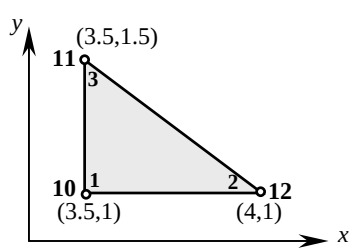

Figure P8.6

Solution: (a) The gradient of $u(x,y)$ is given by

$$\nabla u = \sum_{j=1}^{n} u_j\left(\frac{\partial\psi_j}{\partial x}\hat{\mathbf{e}}_1 + \frac{\partial\psi_j}{\partial y}\hat{\mathbf{e}}_2\right)$$

PROPRIETARY MATERIAL. ©The McGraw-Hill Companies, Inc. All rights reserved.

where $\hat{\mathbf{e}}_1$ and $\hat{\mathbf{e}}_2$ are the unit vectors along the x and y axes, respectively. Thus we need to find the interpolation functions for the element at hand. We have

$$\alpha_1 = 2.5,\ \alpha_2 = -1.75,\ \alpha_3 = -0.5,\ \beta_1 = -0.5,\ \beta_2 = 0.5$$

$$\beta_3 = 0.0, \gamma_1 = -0.5,\ \gamma_2 = 0.0,\ \gamma_3 = 0.5$$

The interpolation functions become ($2A = \alpha_1 + \alpha_2 + \alpha_3 = 0.25$)

$$\psi_1 = (10 - 2x - 2y)\,,\ \psi_2 = (-7 + 2x)\,,\ \psi_3 = (-2 + 2y)$$

$$\frac{\partial \psi_1}{\partial x} = -2,\ \frac{\partial \psi_1}{\partial y} = -2,\ \frac{\partial \psi_2}{\partial x} = 2$$

$$\frac{\partial \psi_2}{\partial y} = 0,\ \frac{\partial \psi_3}{\partial x} = 0,\ \frac{\partial \psi_3}{\partial y} = 2$$

Thus we have ($u_1 = 389.79, u_2 = 395.08, u_3 = 337.19$)

$$\nabla u = 2\left[(-389.79 + 395.08)\hat{\mathbf{e}}_1 + (-389.79 + 337.19)\hat{\mathbf{e}}_2\right] = 10.58\hat{\mathbf{e}}_1 - 105.20\hat{\mathbf{e}}_2$$

For the element at hand the result can be obtained directly as

$$\nabla u = \frac{u_2 - u_1}{0.5}\hat{\mathbf{e}}_1 + \frac{u_3 - u_1}{0.5}\hat{\mathbf{e}}_2 = 10.58\hat{\mathbf{e}}_1 - 105.20\hat{\mathbf{e}}_2$$

(b) The $u = 392$ line intersects the horizontal line at a distance of x_0 from node 1,

$$x_0 = 0.5\frac{392 - 389.79}{395.08 - 389.79} = 0.2089$$

and it intersects the diagonal line at a distance s_0 from node 3,

$$s_0 = \frac{1}{\sqrt{2}}\frac{392 - 337.19}{395.08 - 337.19} = 0.6694$$

Thus, the global coordinates of the point where the 392 isotherm intersects the line connecting global nodes 10 and 11 is (x, y)=(3.7089,1); it intersects the line connecting global nodes 11 and 12 at the point (x, y)=(3.9734,1.0266).

Problem 8.7: If the nodal values of the elements shown in Fig. P8.7 are $u_1 = 0.2645$, $u_2 = 0.2172$, $u_3 = 0.1800$ for the triangular element and $u_1 = 0.2173$, $u_3 = 0.1870$, $u_2 = u_4 = 0.2232$ for the rectangular element, compute u, $\partial u/\partial x$ and $\partial u/\partial y$ at the point $(x, y) = (0.375, 0.375)$.

PROPRIETARY MATERIAL. ©The McGraw-Hill Companies, Inc. All rights reserved.

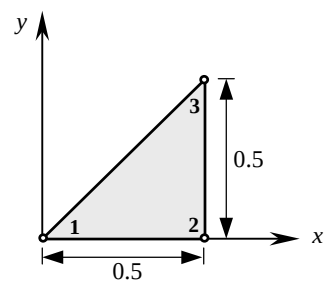

Figure P8.7(a)

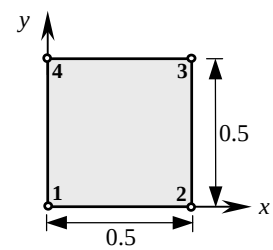

Figure P8.7(b)

Solution: The function $u(x, y)$ and its derivatives in the finite element method are given by (for any element)

$$u(x,y) = \sum_{j=1}^{n} u_j \psi_j(x,y), \quad \frac{\partial u}{\partial x} = \sum_{j=1}^{n} u_j \frac{\partial \psi_j}{\partial x}, \quad \frac{\partial u}{\partial y} = \sum_{j=1}^{n} u_j \frac{\partial \psi_j}{\partial y}$$

Clearly, the derivatives for the linear triangular element are element-wise constant; for rectangular element $\partial u/\partial x$ is linear in y and $\partial u/\partial y$ is linear in x.

First, we must determine the interpolation functions for each of the elements to find the values of u and its derivatives at $x = 0.375$ and $y = 0.375$.

(a) *Triangular Element:* We have

$$\alpha_1 = 0.25,\ \alpha_2 = 0.0,\ \alpha_3 = 0.0,\ \beta_1 = -0.5,\ \beta_2 = 0.5$$

$$\beta_3 = 0.0, \gamma_1 = 0.0,\ \gamma_2 = -0.5,\ \gamma_3 = 0.5$$

The interpolation functions become ($2A = \alpha_1 + \alpha_2 + \alpha_3 = 0.25$)

$$\psi_1 = (1 - 2x)\,,\ \psi_2 = 2\,(x - y)\,,\ \psi_3 = 2y$$

and the required value of u and its derivatives are

$$\begin{aligned} u(0.375, 0.375) &= 0.2645 \times 0.25 + 0.1800 \times 0.75 = 0.2011 \\ \frac{\partial u}{\partial x} &= u_1(-2.0) + u_2(2.0) + 0 = -0.0946 \\ \frac{\partial u}{\partial y} &= 0 + u_2(-2.0) + u_3(2.0) = -0.0744 \end{aligned}$$

(b) *Rectangular Element:* The interpolation functions are

$$\psi_1 = (1 - 2x)(1 - 2y),\ \psi_2 = 2x(1 - 2y),\ \psi_3 = 4xy,\ \psi_4 = (1 - 2x)2y$$

PROPRIETARY MATERIAL. ©The McGraw-Hill Companies, Inc. All rights reserved.

and the values of u and its derivatives are

$$
\begin{aligned}
u(0.375, 0.375) &= u_1(0.25)(0.25) + u_2(0.75)(0.25) + u_3(0.375)(0.375) \\
&\quad + u_4(0.25)(0.75) = 0.2025 \\
\frac{\partial u}{\partial x} &= u_1(-2)(0.25) + u_2(2)(0.25) + 4u_3(0.375) + u_4(-2)(0.75) \\
&= -0.05135 \\
\frac{\partial u}{\partial y} &= u_1(-2)(0.25) + u_2(-2)(0.75) + u_3(1.5) + u_4(2)(0.25) \\
&= -0.05135
\end{aligned}
$$

Problem 8.8: Compute the contribution of the Pump 2 discharge to the nodes of element 43 in the groundwater flow problem of Example 8.5.4.

Solution: Pump 2 is located at $(x, y) = (600, 1900)$ (see Fig. 8.5.6). The nodal coordinates of the element in which Pump 2 is located are

$$(x_1, y_1) = (375, 1687.5), \quad (x_2, y_2) = (750, 1875), \quad (x_3, y_3) = (375, 2125)$$

In local coordinates $(\bar{x}, \bar{y})$, where $\bar{x} = x - 375$ and $\bar{y} = y - 1687.5$, the element nodes are

$$(\bar{x}_1, \bar{y}_1) = (0, 0), \quad (\bar{x}_2, \bar{y}_2) = (375, 187.5), \quad (\bar{x}_3, \bar{y}_3) = (0, 437.5)$$

Then the rate of pumping is

$$Q_2 = -2,400\delta(\bar{x} - 225, \bar{y} - 212.5)\text{m}^3/\text{day/m}$$

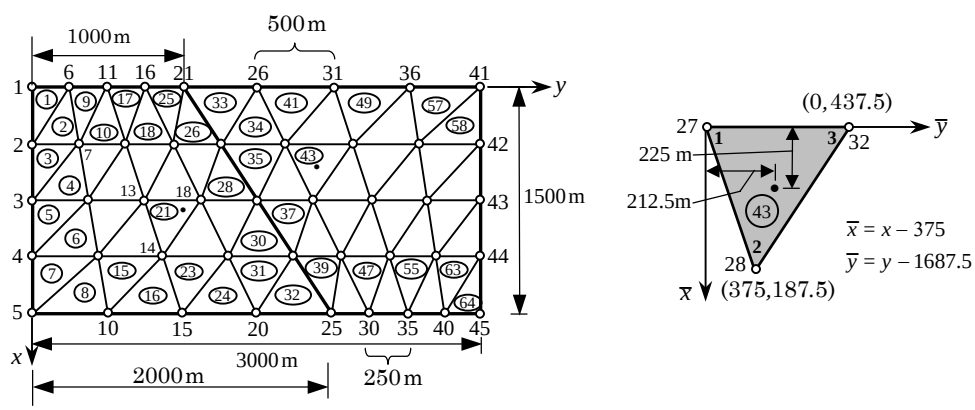

PROPRIETARY MATERIAL. ©The McGraw-Hill Companies, Inc. All rights reserved.

The interpolation functions of the element are

$$\psi_i(\bar{x},\bar{y}) = \frac{1}{2A}(\alpha_i + \beta_i\bar{x} + \gamma_i\bar{y}), \quad (i = 1,2,3)$$

$$2A = 375 \times 437.5, \quad \alpha_1 = 375 \times 437.5, \quad \alpha_2 = 0, \quad \alpha_3 = 0$$

$$\beta_1 = -250, \quad \beta_2 = 437.5, \quad \beta_3 = -187.5, \quad \gamma_1 = -375, \quad \gamma_2 = 0, \quad \gamma_3 = 375$$

Hence, the contributions of Pump 2 to the global nodes 27, 28 and 32 are

$$\begin{aligned} F_{27} &= -2,400\,\psi_1(225,212.5) = -411.429 \\ F_{28} &= -2,400\,\psi_2(225,212.5) = -1,440 \\ F_{32} &= -2,400\,\psi_3(225,212.5) = -548.571 \end{aligned}$$

Problem 8.9: Find the coefficient matrix associated with the Laplace operator when the rectangular element in Fig. P8.9(a)is divided into two triangles by joining node 1 to node 3 [see Fig. P8.9(b)]. Compare the resulting matrix that of the rectangular element in Eq. (8.2.54).

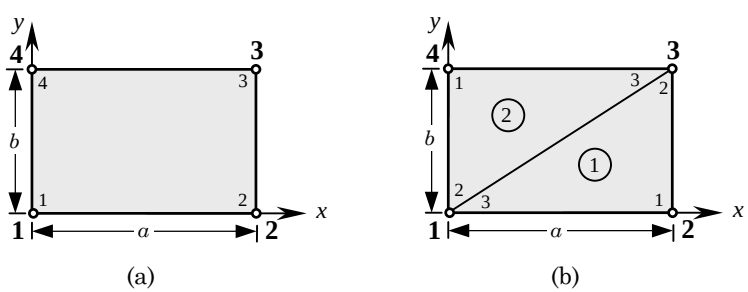

Figure P8.9

Solution: The coefficient matrix associated with the assembly of two triangular elements is given by [see Fig. 8.2.10(a) and Eq. (8.2.49)]

$$[K^e] = \begin{bmatrix} K^1_{33} + K^2_{22} & K^1_{31} & K^1_{32} + K^2_{23} & K^2_{21} \\ K^1_{13} & K^1_{11} & K^1_{12} & 0 \\ K^1_{23} + K^2_{32} & K^1_{21} & K^1_{22} + K^2_{33} & K^2_{31} \\ K^2_{12} & 0 & K^2_{13} & K^2_{11} \end{bmatrix}$$

Using the coefficient matrix from Eq. (8.2.49) with $k_e = 1$, we obtain

$$[K^e] = \frac{1}{2ab}\begin{bmatrix} a^2+b^2 & -a^2 & 0 & -b^2 \\ -a^2 & a^2+b^2 & -b^2 & 0 \\ 0 & -b^2 & a^2+b^2 & -a^2 \\ -b^2 & 0 & -a^2 & a^2+b^2 \end{bmatrix}$$

Compare this result that in Eq. (8.2.54) for $k_e = 1$ (they are not the same).

PROPRIETARY MATERIAL. ©The McGraw-Hill Companies, Inc. All rights reserved.

Problem 8.10: Compute the element matrices

$$S_{ij}^{01} = \int_0^a \int_0^b \psi_i \frac{d\psi_j}{dx}\, dx\, dy, \quad S_{ij}^{02} = \int_0^a \int_0^b \psi_i \frac{d\psi_j}{dy}\, dx\, dy$$

where $\psi_i(x, y)$ are the linear interpolation functions of a rectangular element with sides a and b.

Solution: The coefficients S_{ij}^{01} are given by

$$S_{ij}^{01} = \int_0^b \int_0^a \psi_i \frac{\partial \psi_j}{\partial x} dxdy$$

where ψ_i for the rectangular element are given by Eqn. (8.2.32a). Using the following integral values,

$$\int_0^a \left(1 - \frac{x}{a}\right) dx = \frac{a}{2}, \ \int_0^a \left(1 - \frac{x}{a}\right)^2 dx = \frac{a}{3}, \ \int_0^a \left(1 - \frac{x}{a}\right) \frac{x}{a} dx = \frac{a}{6}$$

and similar values for integrals over $(0, b)$, we obtain

$$[S^{01}] = \frac{b}{12} \begin{bmatrix} -2 & 2 & 1 & -1 \\ -2 & 2 & 1 & -1 \\ -1 & 1 & 2 & -2 \\ -1 & 1 & 2 & -2 \end{bmatrix}$$

Similary, we have

$$S_{ij}^{02} = \int_0^b \int_0^a \psi_i \frac{\partial \psi_j}{\partial y} dxdy$$

$$[S^{02}] = \frac{a}{12} \begin{bmatrix} -2 & -1 & 1 & 2 \\ -1 & -2 & 2 & 1 \\ -1 & -2 & 2 & 1 \\ -2 & -1 & 1 & 2 \end{bmatrix}$$

Problem 8.11: Give the assembled coefficient matrix for the finite element meshes shown in Figs. P8.11(a) and P8.11(b). Assume 1 degree of freedom per node, and let $[K^e]$ denote the element coefficient matrix for the eth element. Your answer should be in terms of element matrices K_{ij}^e.

Solution: Typical coefficients of the assembled matrices are given by

(a) $K_{11} = K_{11}^1,\ K_{12} = K_{14}^1,\ K_{13} = 0,\ K_{14} = K_{12}^1,\ K_{15} = K_{13}^1$
$K_{16} = 0,\ K_{17} = 0,\ K_{18} = 0,\ K_{22} = K_{44}^1 + K_{11}^2,\ K_{25} = K_{43}^1 + K_{12}^2$

(b) $K_{11} = K_{22}^2,\ K_{12} = K_{23}^2,\ K_{13} = 0,\ K_{14} = K_{21}^2,\ K_{15} = K_{24}^2$
$K_{16} = 0,\ K_{17} = 0,\ K_{1(10)} = 0,\ K_{77} = K_{33}^3 + K_{11}^4 + K_{22}^5$

PROPRIETARY MATERIAL. ©The McGraw-Hill Companies, Inc. All rights reserved.

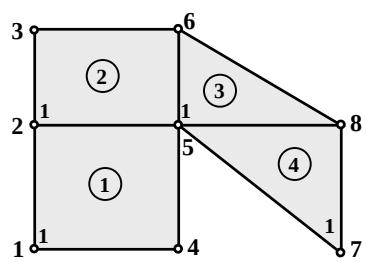

Figure P8.11(a)

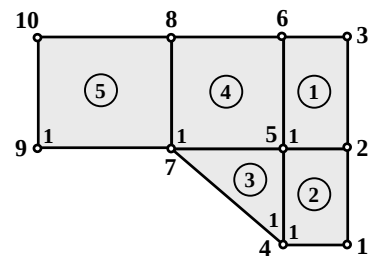

Figure P8.11(b)

Problem 8.12: Repeat Problem 8.11 for the mesh shown in Fig. P8.12.

Solution: Typical assembled coefficients are

$$K_{11} = K_{11}^3,\ K_{12} = K_{16}^3,\ K_{13} = K_{14}^3,\ K_{14} = 0,\ K_{15} = 0$$
$$K_{16} = K_{13}^3,\ K_{17} = K_{15}^3,\ K_{18} = K_{12}^3,\ K_{22} = K_{66}^3,\ K_{25} = 0$$
$$K_{66} = K_{33}^3 + K_{22}^1 + K_{11}^2,\ K_{67} = K_{15}^2 + K_{35}^3,\ K_{68} = K_{12}^2 + K_{32}^3$$
$$K_{6(12)} = K_{24}^1,\ K_{69} = K_{28}^1,\ K_{6(10)} = K_{26}^1,\ K_{9(14)} = K_{83}^1$$
$$K_{7(12)} = 0,\ K_{75} = 0,\ K_{1(10)} = 0,\ K_{77} = K_{55}^3 + K_{55}^2,\ K_{9(10)} = K_{86}^1$$

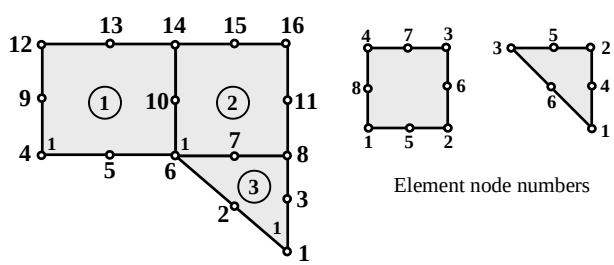

Fig. P8.12

Problem 8.13: Compute the global source vector corresponding to the non-zero specified boundary flux for the finite element meshes of linear elements shown in Fig. P8.13.

PROPRIETARY MATERIAL. ©The McGraw-Hill Companies, Inc. All rights reserved.

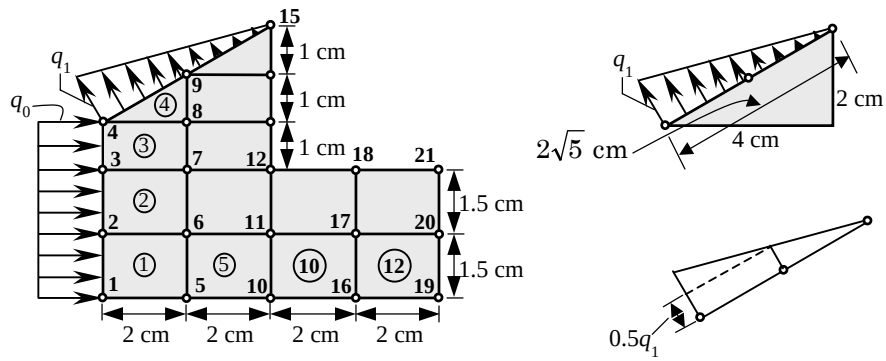

Figure P8.13

Solution: We use the node numbers shown in Fig. P8.13. The nodal contributions are denoted by Q_I, where I denotes the global node number. We have

$$Q_1 = \frac{q_0 h_1}{2} = 0.75q_0,\ Q_2 = \frac{q_0 h_1}{2} + \frac{q_0 h_2}{2} = 1.5q_0$$

$$Q_3 = 0.75q_0 + 0.5q_0 = 1.25q_0,\ Q_4 = 0.5q_0 + 0.5(0.5q_1\sqrt{5}) + \frac{2}{3}\frac{1}{2}(0.5q_1\sqrt{5})$$

$$Q_9 = \frac{1}{3}(0.25q_1\sqrt{5}) + 0.25q_1\sqrt{5} + \frac{2}{3}(0.25q_1\sqrt{5})$$

$$Q_{15} = \frac{1}{3}(0.25q_1\sqrt{5})$$

Problem 8.14: Repeat Problem 8.13 for the finite element mesh of quadratic elements shown in Fig. P8.14.

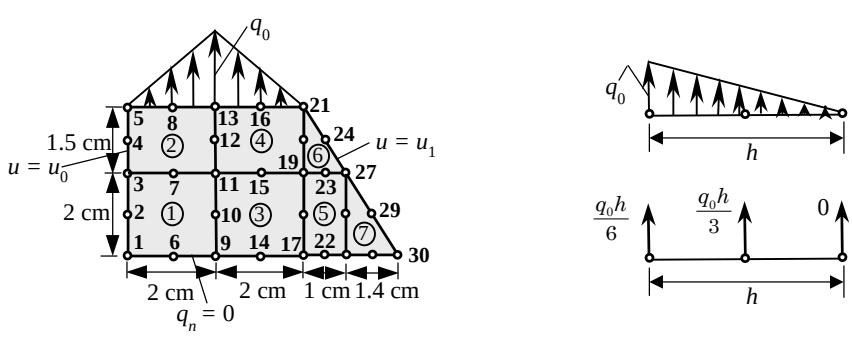

Figure P8.14

PROPRIETARY MATERIAL. ©The McGraw-Hill Companies, Inc. All rights reserved.

Solution: The elements are quadratic, and therefore we must use the 1-D quadratic interpolation functions

$$\psi_1 = \left(1 - 2\frac{x}{h}\right)\left(1 - \frac{x}{h}\right), \ \psi_2 = 4\frac{x}{h}\left(1 - \frac{x}{h}\right), \ \psi_3 = -\frac{x}{h}\left(1 - 2\frac{x}{h}\right)$$

The flux is given by $q_n = q_0 x/h$ and $h = 5$cm. Evaluating the boundary integral for a typical quadratic element we obtain,

$$Q_1^e = \int_0^h q_n \left(1 - 3\frac{x}{h} + 2\frac{x}{h}^2\right) dx = 0$$

Similarly, we obtain

$$Q_2^e = \frac{q_0 h}{3}, \quad Q_3^e = \frac{q_0 h}{6}$$

Hence, the contribution to the global nodes is

$$Q_1 = 0.0, \ Q_2 = \frac{q_0 h}{3}, \ Q_3 = 2\frac{q_0 h}{6}, \ Q_4 = Q_2 = \frac{q_0 h}{3}, \ Q_5 = 0$$

Problem 8.15: A line source of intensity q_0 is located across the triangular element shown in Fig. P8.15. Compute the element source vector.

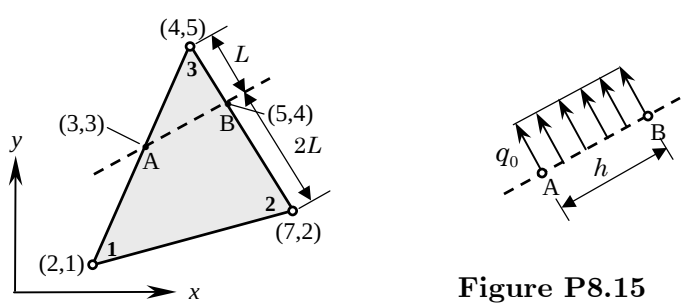

Figure P8.15

Solution: The line source of uniform intensity q_0 along the line AB is distributed to the points A: (3,3) and B: (5,4) as $Q_A = Q_B = q_0 h/2$, where h is the length of the line AB: $h = \sqrt{5}$. Now we can use the procedure of Problem 8.5(b) to distribute the point sources Q_A and Q_B to the element nodes:

$$Q_1 = \frac{Q_A}{2}, \quad Q_2 = \frac{Q_B}{3}, \quad Q_3 = \frac{Q_A}{2} + \frac{2Q_B}{3} \qquad (i)$$

or

$$Q_1 = \frac{q_0 h}{4}, \quad Q_2 = \frac{q_0 h}{6}, \quad Q_3 = \frac{q_0 h}{4} + \frac{q_0 h}{3} \qquad (ii)$$

PROPRIETARY MATERIAL. ©The McGraw-Hill Companies, Inc. All rights reserved.

Problem 8.16: Repeat Problem 8.15 when the line source has varying source, $q(s) = q_0 s/L$, where s is the coordinate along the line-source.

Solution: Assume that the origin of the coordinate s is at the point $A : (3, 3)$ and directed to point B (see the Figure of Problem 8.15). The contribution of the linearly varying force to the points A and B is:

$$Q_A = \frac{1}{3}\left(\frac{q_0 h}{2}\right), \quad Q_B = \frac{2}{3}\left(\frac{q_0 h}{2}\right) \tag{i}$$

Next we use Eq. (i) of Problem 8.15 above to compute the nodal contribution.

$$Q_1 = \frac{Q_A}{2}, \quad Q_2 = \frac{Q_B}{3}, \quad Q_3 = \frac{Q_A}{2} + \frac{2Q_B}{3} \tag{ii}$$

or

$$Q_1 = \frac{q_0 h}{12}, \quad Q_2 = \frac{q_0 h}{9}, \quad Q_3 = \frac{q_0 h}{12} + \frac{2q_0 h}{9} \tag{iii}$$

Problem 8.17: Consider the following partial differential equation governing the variable u:

$$c\frac{\partial u}{\partial t} - \frac{\partial}{\partial x}\left(a\frac{\partial u}{\partial x}\right) - \frac{\partial}{\partial y}\left(b\frac{\partial u}{\partial y}\right) - f_0 = 0$$

where c, a, b, and f_0 are constants. Assume approximation of the form

$$u_h(x, y, t) = (1 - x)yu_1(t) + x(1 - y)u_2(t)$$

where u_1 and u_2 are nodal values of u at time t. (a) Develop the fully discretized finite element model of the equation. (b) evaluate the element coefficient matrices and source vector for a square element of dimension 1 unit by 1 unit (so that the evaluation of the integrals is made easy). **Note:** You should not be concerned with this non-conventional approximation of the dependent unknown but just use it as given to answer the question.

Solution: (a) The semidiscretized finite element model is given by

$$\sum_{j=1}^{n} (M_{ij}\dot{u}_j + K_{ij}u_j) = F_i \quad \text{or} \quad [M]\{\dot{u}\} + [K]\{u\} = \{F\}$$

where

$$M_{ij} = \int_0^1 \int_0^1 \psi_i \psi_j \, dxdy$$
$$K_{ij} = \int_0^1 \int_0^1 \left(a\frac{\partial \psi_i}{\partial x}\frac{\partial \psi_j}{\partial x} + \frac{\partial \psi_i}{\partial y}\frac{\partial \psi_j}{\partial y}\right) dxdy$$
$$f_i = \int_0^1 \int_0^1 \psi_i f_0 \, dxdy$$

PROPRIETARY MATERIAL. ©The McGraw-Hill Companies, Inc. All rights reserved.

The fully discretized model is given by

$$[\hat{K}]\{u\}_{s+1} = \{\hat{F}\}_{s,s+1}$$

where

$$[\hat{K}]_{s+1} = [M] + a_1[K]_{s+1}$$

$$\{\hat{F}\} = \Delta t(\alpha\{F\}_{s+1} + (1-\alpha)\{F\}_s) + ([M] - a_2[K]_s)\{u\}_s$$

$$a_1 = \alpha\Delta t, \quad a_2 = (1-\alpha)\Delta t$$

(b) The interpolation functions are $\psi_1(x,y) = (1-x)y, \quad \psi_2 = (1-y)x$. Obviously, the 2D element has just 2 nodes (diagonally opposite sides of the unit square)

$$[M] = \frac{c}{36}\begin{bmatrix} 4 & 1 \\ 1 & 4 \end{bmatrix}, \quad [K] = \frac{a+b}{6}\begin{bmatrix} 2 & -1 \\ -1 & 2 \end{bmatrix}, \quad \{f\} = \frac{f_0}{4}\begin{Bmatrix} 1 \\ 1 \end{Bmatrix}$$

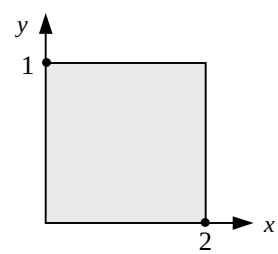

Problem 8.18: Solve the Laplace equation

$$-\left(\frac{\partial^2 u}{\partial x^2} + \frac{\partial^2 u}{\partial y^2}\right) = 0 \quad \text{in} \quad \Omega$$

on a rectangle, when $u(0,y) = u(a,y) = u(x,0) = 0$ and $u(x,b) = u_0(x)$. Use the symmetry and (a) a mesh of 2×2 triangular elements and (b) a mesh of 2×2 rectangular elements (see Fig. P8.18). Compare the finite element solution with the exact solution

$$u(x,y) = \sum_{n=1}^{\infty} A_n \sin\frac{n\pi x}{a} \sinh\frac{n\pi y}{b}$$

where

$$A_n = \frac{2}{a\sinh(n\pi b/a)} \int_0^a u_0(x) \sin\frac{n\pi x}{a} dx$$

Take $a = b = 1$, and $u_0(x) = \sin\ \pi x$ in the computations. For this case, the exact solution becomes

$$u(x,y) = \frac{\sin\ \pi x \sinh \pi y}{\sinh\ \pi}$$

PROPRIETARY MATERIAL. ©The McGraw-Hill Companies, Inc. All rights reserved.

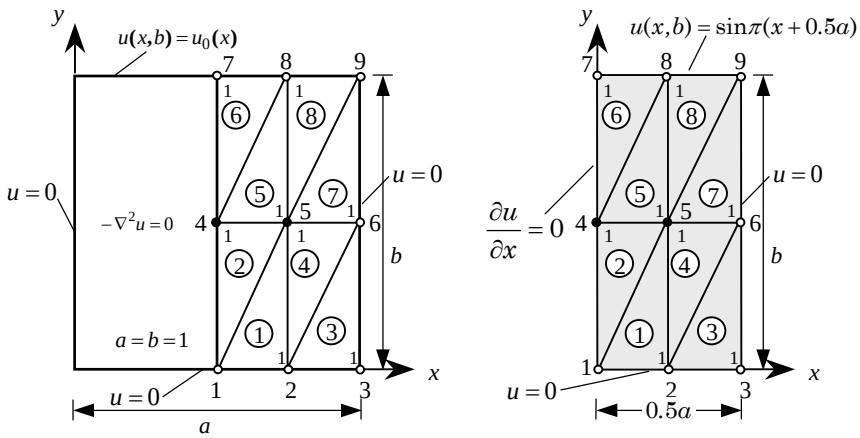

Figure P8.18

Solution:

(a) *Mesh of triangles:* The only unknown nodal values are U_4 and U_5. Hence, we must consider only the equations associated with nodes 4 and 5. We have

$$\sum_{J=1}^{9} K_{IJ}U_J = F_I \ , \quad \text{for} \quad I = 1, 2, \cdots, 9 \tag{i}$$

Since only U_4 and U_5 are unknown, and among the knowns only U_7 and U_8 are nonzero (and $K_{57} = 0$), we have

$$K_{44}U_4 + K_{45}U_5 = F_4 - (K_{47}U_7 + K_{48}U_8 + K_{49}U_9)$$

$$K_{45}U_4 + K_{55}U_5 = F_5 - K_{58}U_8 - K_{59}U_9 \tag{ii}$$

The element nodes are numbered as indicated in Fig. 8.2.10(a) (i.e., node 1 is at the right-angle, with side 1–2 being of length $a = 0.5$ and side 1–3 of length $b = 0.25$). With this choice of local node numbering, all elements of the mesh will have the same element matrices, namely

$$[K^e] = \frac{1}{2}\begin{bmatrix} 2.5 & -0.5 & -2 \\ -0.5 & 0.5 & 0 \\ -2.0 & 0.0 & 2 \end{bmatrix}$$

$$K_{44} = K_{11}^2 + K_{33}^5 + K_{22}^6 = 2.5, \ K_{45} = K_{13}^2 + K_{31}^5 = -2.0$$

$$K_{46} = 0, \ K_{47} = K_{21}^6 = -0.25, \ K_{48} = K_{32}^5 + K_{23}^6 = 0, \ K_{49} = 0$$

$$K_{55} = K_{22}^1 + K_{33}^2 + K_{11}^4 + K_{11}^5 + K_{33}^7 + K_{22}^8 = 5.0$$

PROPRIETARY MATERIAL. ©The McGraw-Hill Companies, Inc. All rights reserved.

$$K_{57} = 0,\ K_{58} = K_{12}^5 + K_{21}^8 = -0.5,\ K_{59} = K_{32}^7 + K_{23}^8 = 0 \qquad (iii)$$

where $U_7 = 1.0$, $U_8 = 0.707$ and $U_9 = 0$. Note that since K_{49} and K_{59} are zero, it does not matter what value of U_9 we use. Substituting the values of K_{IJ} from Eq. (iii) into Eq. (ii), we obtain

$$\frac{1}{2}\begin{bmatrix} 5 & -4 \\ -4 & 10 \end{bmatrix}\begin{Bmatrix} U_4 \\ U_5 \end{Bmatrix} = -\begin{Bmatrix} K_{21}^6 U_7 + (K_{23}^6 + K_{32}^5)U_8 \\ (K_{12}^5 + K_{21}^8)U_8 \end{Bmatrix}$$

or

$$\begin{bmatrix} 2.5 & -2.0 \\ -2.0 & 5.0 \end{bmatrix}\begin{Bmatrix} U_4 \\ U_5 \end{Bmatrix} = \frac{1}{2}\begin{Bmatrix} 0.5 \\ 0.707 \end{Bmatrix}$$

The solution of these equations is

$$U_4 = 0.23025, \quad U_5 = 0.16281$$

The exact solution at these nodes is: $u_4 = 0.19927,\ u_5 = 0.16280$.

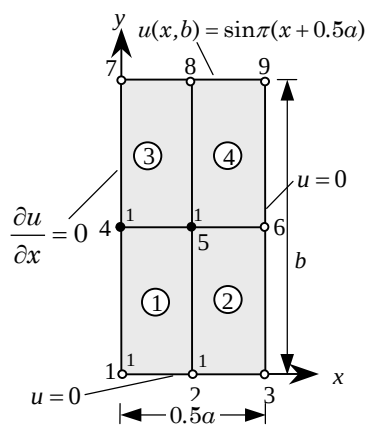

(b) *Mesh of rectangles:* For the rectangular element mesh we have $a = 0.25, b = 0.5, \alpha = 2.0$ and $\beta = 0.5$ (see Fig. 8.2.12 for the node numbers); the element matrix is given by

$$[K^e] = \frac{1}{6}\begin{bmatrix} 5.0 & -3.5 & -2.5 & 1.0 \\ -3.5 & 5.0 & 1.0 & -2.5 \\ -2.5 & 1.0 & 5.0 & -3.5 \\ 1.0 & -2.5 & -3.5 & 5.0 \end{bmatrix}$$

The global coefficients K_{IJ} can be written in terms of the element stiffnesses K_{ij}^e as follows:

$$K_{44} = K_{44}^1 + K_{11}^3 = \frac{10}{6},\ K_{45} = K_{43}^1 + K_{12}^3 = -\frac{7}{6},\ K_{47} = K_{14}^3 = \frac{1}{6}$$
$$K_{48} = K_{13}^3 = -\frac{2.5}{6},\ K_{49} = 0,\ K_{55} = K_{33}^1 + K_{44}^2 + K_{22}^3 + K_{11}^4 = \frac{20}{6}$$
$$K_{57} = K_{24}^3 = -\frac{2.5}{6},\ K_{58} = K_{23}^3 + K_{14}^4 = \frac{2}{6},\ K_{59} = K_{13}^4 = -\frac{2.5}{6}$$

PROPRIETARY MATERIAL. ©The McGraw-Hill Companies, Inc. All rights reserved.

The condensed equations are

$$\frac{1}{6}\begin{bmatrix} 10 & -7 \\ -7 & 20 \end{bmatrix}\begin{Bmatrix} U_4 \\ U_5 \end{Bmatrix} = -\frac{1}{6}\begin{Bmatrix} 1\times 1 - 2.5\times 0.707 \\ -2.5\times 1 + 2\times 0.707 \end{Bmatrix}$$

or

$$\begin{bmatrix} 10 & -7 \\ -7 & 20 \end{bmatrix}\begin{Bmatrix} U_4 \\ U_5 \end{Bmatrix} = \begin{Bmatrix} 0.7675 \\ 1.086 \end{Bmatrix}$$

The solution of these equations is

$$U_4 = 0.1520, \quad U_5 = 0.1075$$

Problem 8.19: Solve Problem 8.18 when $u_0(x) = 1$. The analytical solution is given by

$$u(x,y) = \frac{4}{\pi}\sum_{n=0}^{\infty}\frac{\sin(2n+1)\pi x \sinh(2n+1)\pi y}{(2n+1)\sinh(2n+1)\pi}$$

Solution: The only unknown nodal values are U_4 and U_5. Hence, we must consider only the two equations associated with nodes 4 and 5. We have

$$\sum_{J=1}^{9} K_{IJ}U_J = F_I\ , \quad \text{for} \quad I = 1, 2, \cdots, 9 \qquad (i)$$

Among the knowns, only U_7, U_8, and (possibly) U_9 are nonzero. Hence, we have

$$\begin{aligned} K_{44}U_4 + K_{45}U_5 &= F_4 - (K_{47}U_7 + K_{48}U_8 + K_{49}U_9) \\ K_{45}U_4 + K_{55}U_5 &= F_5 - K_{58}U_8 - K_{59}U_9 \end{aligned} \qquad (ii)$$

(a) *Mesh of triangles:* The element nodes are numbered as indicated in Figure P8.6 on page 387 (*i.e.* node 1 is at the right-angle, with side 1-2 being of length $a = 0.5$ and side 1-3 of length $b = 0.25$). With this choice of local node numbering, all elements of the mesh will have the same element matrices, namely

$$[K^e] = \frac{1}{2}\begin{bmatrix} 2.5 & -0.5 & -2.0 \\ -0.5 & 0.5 & 0.0 \\ -2.0 & 0.0 & 2.0 \end{bmatrix}$$

The global coefficients K_{IJ} can be written in terms of the element stiffnesses K^e_{ij} as follows:

$$\begin{aligned} &K_{44} = K^2_{11} + K^5_{33} + K^6_{22} = 2.5,\ K_{45} = K^2_{13} + K^5_{31} = -2.0 \\ &K_{46} = 0,\ K_{47} = K^6_{21} = -0.25,\ K_{48} = K^5_{32} + K^6_{23} = 0,\ K_{49} = 0 \\ &K_{55} = K^1_{22} + K^2_{33} + K^4_{11} + K^5_{11} + K^7_{33} + K^8_{22} = 5.0 \\ &K_{57} = 0,\ K_{58} = K^5_{12} + K^8_{21} = -0.5,\ K_{59} = K^7_{32} + K^8_{23} = 0 \end{aligned} \qquad (iii)$$

PROPRIETARY MATERIAL. ©The McGraw-Hill Companies, Inc. All rights reserved.

Note that since K_{49} and K_{59} are zero, it does not matter what value of U_9 we use. Substituting the values of K_{IJ} from Eq. (iii) into Eq. (ii), we obtain

$$\begin{bmatrix} 2.5 & -2.0 \\ -2.0 & 5.0 \end{bmatrix} \begin{Bmatrix} U_4 \\ U_5 \end{Bmatrix} = \begin{Bmatrix} 0.25 \\ 0.50 \end{Bmatrix}$$

The solution of these equations is

$$U_4 = 0.26471, \quad U_5 = 0.20588$$

(b) *Mesh of rectangles:* For the rectangular element mesh we have $a = 0.25, b = 0.5, \alpha = 2.0$ and $\beta = 0.5$; the element matrix is given by

$$[K^e] = \frac{1}{6} \begin{bmatrix} 5.0 & -3.5 & -2.5 & 1.0 \\ -3.5 & 5.0 & 1.0 & -2.5 \\ -2.5 & 1.0 & 5.0 & -3.5 \\ 1.0 & -2.5 & -3.5 & 5.0 \end{bmatrix}$$

The global coefficients K_{IJ} can be written in terms of the element stiffnesses K_{ij}^e as follows:

$$K_{44} = K_{44}^1 + K_{11}^3 = \frac{10}{6}, \; K_{45} = K_{43}^1 + K_{12}^3 = -\frac{7}{6}, \; K_{47} = K_{14}^3 = \frac{1}{6}$$
$$K_{48} = K_{13}^3 = -\frac{2.5}{6}, \; K_{49} = 0, \; K_{55} = K_{33}^1 + K_{44}^2 + K_{22}^3 + K_{11}^4 = \frac{20}{6}$$
$$K_{57} = K_{24}^3 = -\frac{2.5}{6}, \; K_{58} = K_{23}^3 + K_{14}^4 = \frac{2}{6}, \; K_{59} = K_{13}^4 = -\frac{2.5}{6}$$

The condensed equations are

$$\frac{1}{6} \begin{bmatrix} 10 & -7 \\ -7 & 20 \end{bmatrix} \begin{Bmatrix} U_4 \\ U_5 \end{Bmatrix} = -\frac{1}{6} \begin{Bmatrix} 1 \times 1 - 2.5 \times 1 - 0 \times U_9 \\ -2.5 \times 1 + 2 \times 1 - 2.5 \times U_9 \end{Bmatrix}$$

Taking $U_9 = 0.0$, we have

$$\begin{bmatrix} 1.6667 & -1.1667 \\ -1.1667 & 3.3333 \end{bmatrix} \begin{Bmatrix} U_4 \\ U_5 \end{Bmatrix} = \begin{Bmatrix} 0.25 \\ 0.0833 \end{Bmatrix}$$

The solution of these equations is

$$U_4 = 0.22185, \quad U_5 = 0.10265$$

If we take $U_9 = 1.0$, we obtain

$$\begin{bmatrix} 1.6667 & -1.1667 \\ -1.1667 & 3.3333 \end{bmatrix} \begin{Bmatrix} U_4 \\ U_5 \end{Bmatrix} = \begin{Bmatrix} 0.25 \\ 0.50 \end{Bmatrix}$$

PROPRIETARY MATERIAL. ©The McGraw-Hill Companies, Inc. All rights reserved.

The solution of these equations is

$$U_4 = 0.33775, \quad U_5 = 0.26821$$

Problem 8.20: Solve Problem 8.18 when $u_0(x) = 4(x - x^2)$.

Solution: The specified primary degrees of freedom are: $U_7 = u(0.5) = 1.0, U_8 = u(0.75) = 0.75$ and $U_9 = u(1) = 0.0$
(a) The condensed equations are

$$\begin{bmatrix} 2.5 & -2.0 \\ -2.0 & 5.0 \end{bmatrix} \begin{Bmatrix} U_4 \\ U_5 \end{Bmatrix} = \frac{1}{2} \begin{Bmatrix} 0.50 \\ 0.75 \end{Bmatrix}$$

The solution of these equations is

$$U_4 = 0.2353, \quad U_5 = 0.1691$$

(b) The condensed equations are

$$\frac{1}{6} \begin{bmatrix} 10 & -7 \\ -7 & 20 \end{bmatrix} \begin{Bmatrix} U_4 \\ U_5 \end{Bmatrix} = -\frac{1}{6} \begin{Bmatrix} 1 \times 1 - 2.5 \times 0.75 \\ -2.5 \times 1 + 2 \times 1 + 2 \times 0.75 \end{Bmatrix}$$

or

$$\begin{bmatrix} 10 & -7 \\ -7 & 20 \end{bmatrix} \begin{Bmatrix} U_4 \\ U_5 \end{Bmatrix} = \begin{Bmatrix} 0.875 \\ 1.000 \end{Bmatrix}$$

The solution of these equations is

$$U_4 = 0.16225, \quad U_5 = 0.10679$$

Problem 8.21: Solve the Laplace equation for the unit square domain and boundary conditions given in Fig. P8.21. Use one rectangular element.

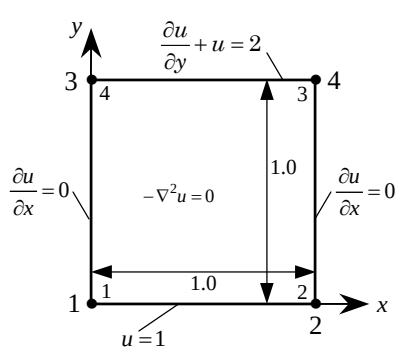

Figure P8.21

PROPRIETARY MATERIAL. ©The McGraw-Hill Companies, Inc. All rights reserved.

Solution: For the one square element mesh we have

$$\frac{1}{6}\begin{bmatrix} 4 & -1 & -2 & -1 \\ -1 & 4 & -1 & -2 \\ -2 & -1 & 4 & -1 \\ -1 & -2 & -1 & 4 \end{bmatrix}\begin{Bmatrix} U_1 \\ U_2 \\ U_3 \\ U_4 \end{Bmatrix} = \begin{Bmatrix} Q_1 \\ Q_2 \\ Q_3 \\ Q_4 \end{Bmatrix}$$

The boundary conditions are: $U_1 = 1.0$ and $U_2 = 1.0$, and

$$\begin{aligned} Q_3 &= \int_0^1 \psi_3(x,1)(2-u)dx = \int_0^1 x\left[2 - xU_3 - (1-x)U_4\right]dx \\ &= 2(0.5) - (\frac{1}{3})U_3 - (\frac{1}{6})U_4, \\ Q_4 &= \int_0^1 \psi_4(x,1)(2-u)dx = \int_0^1 (1-x)\left[2 - xU_3 - (1-x)U_4\right]dx \\ &= 2(0.5) - (\frac{1}{6})U_3 - (\frac{1}{3})U_4 \end{aligned}$$

Hence we have

$$\begin{bmatrix} 1 & 0 \\ 0 & 1 \end{bmatrix}\begin{Bmatrix} U_3 \\ U_4 \end{Bmatrix} = \begin{Bmatrix} 1.5 \\ 1.5 \end{Bmatrix}$$

The solution of these equations is

$$U_3 = 1.5, \quad U_4 = 1.5$$

Problem 8.22: Use two triangular elements to solve the problem in Fig. P8.21. Use the mesh obtained by joining points (1,0) and (0,1).

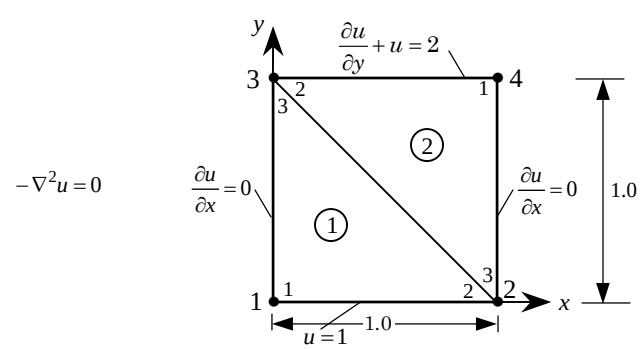

Solution: For the mesh of two triangular elements, we have

$$\frac{1}{2}\begin{bmatrix} 2 & -1 & -1 & 0 \\ -1 & 2 & 0 & -1 \\ -1 & 0 & 2 & -1 \\ 0 & -1 & -1 & 2 \end{bmatrix}\begin{Bmatrix} U_1 \\ U_2 \\ U_3 \\ U_4 \end{Bmatrix} = \begin{Bmatrix} Q_1^1 \\ Q_2^1 + Q_3^2 \\ Q_3^1 + Q_2^2 \\ Q_1^2 \end{Bmatrix}$$

PROPRIETARY MATERIAL. ©The McGraw-Hill Companies, Inc. All rights reserved.

The boundary conditions are: $U_1 = 1.0$, $U_2 = 1.0$, $Q_3 = Q_3^1 + Q_2^2 = 1 - U_3/3 - U_4/6$, and $Q_4 = Q_1^2 = 1 - U_3/6 - U_4/3$. Hence, we have

$$\frac{1}{6}\begin{bmatrix} 8 & -2 \\ -2 & 8 \end{bmatrix}\begin{Bmatrix} U_3 \\ U_4 \end{Bmatrix} = \begin{Bmatrix} 1.5 \\ 1.5 \end{Bmatrix}$$

The solution of these equations is

$$U_3 = 1.5, \quad U_4 = 1.5$$

Problem 8.23: Consider the steady-state heat transfer (or other phenomenon) in a square region shown in Figure P8.23. The governing equation is given by

$$-\frac{\partial}{\partial x}\left(k\frac{\partial u}{\partial x}\right) - \frac{\partial}{\partial y}\left(k\frac{\partial u}{\partial y}\right) = f_0$$

The boundary conditions for the problem are:

$$u(0,y) = y^2 \ , \ u(x,0) = x^2 \ , \ u(1,y) = 1 - y \ , \ u(x,1) = 1 - x$$

Assuming $k = 1$ and $f_0 = 2$, determine the unknown nodal value of u using the uniform 2×2 mesh of rectangular elements.

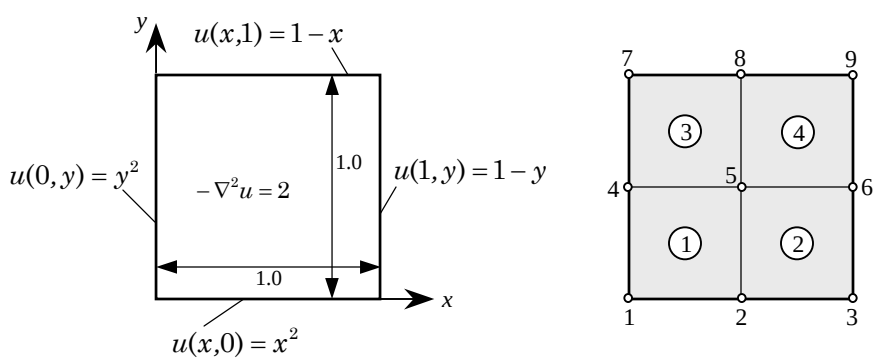

Figure P8.23

Solution: For the 2×2 mesh of rectangular elements, the only unknown is U_5; other nodal values are known as: $U_1 = 0.0, U_2 = 0.25, U_3 = 1.0, U_4 = 0.25, U_6 = 0.5, U_7 = 1.0, U_8 = 0.5, U_9 = 0.0$. We have the equation

$$\frac{16}{6}U_5 = -\frac{1}{6}(-2 \times 0 - 2 \times 0.25 - 2 \times 1 - 2 \times 0.25 - 2 \times 0.5 - 2 \times 1 - 2 \times 0.5) + 4\left(\frac{f_0 A}{4}\right)$$

where $f_0 = 2$ and $A = 0.25$; the solution of this equation is $U_5 = 0.625$.

PROPRIETARY MATERIAL. ©The McGraw-Hill Companies, Inc. All rights reserved.

Problem 8.24: Solve Prob. 8.23 using the mesh of a rectangle and two triangles, as shown in Fig. P8.24.

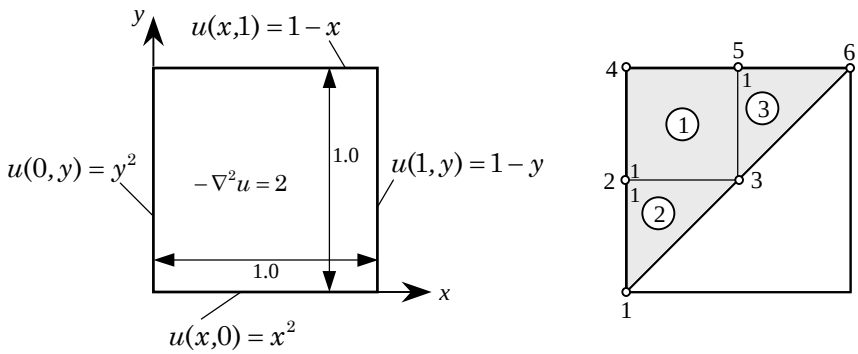

Figure P8.24

Solution: For the mesh given in Figure P8.24, the only unknown nodal value is U_3. The equation is

$$K_{33}U_3 = F_3 - (K_{31}U_1 + K_{32}U_2 + K_{34}U_4 + K_{35}U_5 + K_{36}U_6)$$

where $U_1 = 0$, $U_2 = 0.25$, $U_4 = 1.0$, $U_5 = 0.5$, $U_6 = 0.0$ and

$$\begin{aligned}
&K_{31} = K_{32}^2 = 0,\ K_{32} = K_{31}^2 + K_{21}^1 = -\frac{1}{2} - \frac{1}{6} \\
&K_{33} = K_{22}^1 + K_{33}^2 + K_{22}^3 = \frac{4}{6} + \frac{1}{2} + \frac{1}{2},\ K_{34} = K_{24}^1 = -\frac{2}{6} \\
&K_{35} = K_{23}^1 + K_{21}^3 = -\frac{1}{6} - \frac{1}{2},\ K_{36} = K_{23}^3 = 0,\ F_3 = 0 + 2\frac{f_0 A_T}{3} + \frac{f_0 A_R}{4}
\end{aligned}$$

where $f_0 = 2$, $A_T = 0.125$ and $A_R = 0.25$. We obtain

$$\begin{aligned}
\left(\frac{2}{3} + 1\right) U_3 &= -\left[-\frac{1}{2} - \frac{1}{6}\right](0.25) - \left[-\frac{2}{6}\right](1.0) - \left[-\frac{1}{6} - \frac{1}{2}\right](0.5) \\
&\quad + \frac{7}{12}(0.5) \\
&= \frac{1}{6} + \frac{2}{6} + \frac{2}{6} + \frac{7}{24} = \frac{27}{24}
\end{aligned}$$

or $U_3 = 0.675$.

Problem 8.25: Solve the Poisson equation $-\nabla^2 u = 2$ in Ω, $u = 0$ on Γ_1, $\partial u/\partial n = 0$ on Γ_2, where Ω is the first quadrant bounded by the parabola $y = 1 - x^2$ and the coordinate axes (see Fig. P8.25), and Γ_1 and Γ_2 are the boundaries shown in Fig. P8.25.

PROPRIETARY MATERIAL. ©The McGraw-Hill Companies, Inc. All rights reserved.

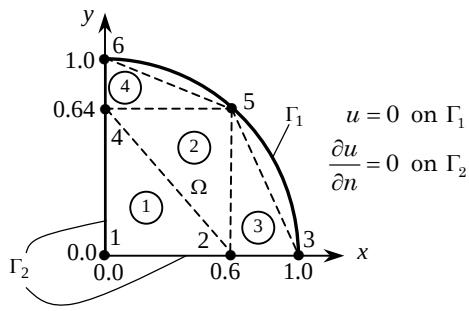

Figure P8.25

Solution: The coefficient matrix associated with the Laplace operator over a right-angle triangle is given in Eq. (8.2.9) with $k_e = 1$. The element coefficent matrices and source vectors for each element are listed below. ($L_{12} \equiv a,\ L_{13} \equiv b$):

Elements 1 and 2: ($a = 0.6,\ b = 0.64,\ \beta = a/b = 0.9375,\ \alpha = b/a = 1.06667$)

$$[K^1] = [K^2] = \begin{bmatrix} 1.0021 & -0.5333 & -0.4688 \\ -0.5333 & 0.5333 & 0.0000 \\ -0.4688 & 0.0000 & 0.4688 \end{bmatrix}; \quad \{f^1\} = \{f^2\} = \begin{Bmatrix} 0.128 \\ 0.128 \\ 0.128 \end{Bmatrix}$$

Element 3: ($a = 0.4,\ b = 0.64,\ \beta = a/b = 0.625,\ \alpha = b/a = 1.6$)

$$[K^3] = \begin{bmatrix} 1.1125 & -0.800 & -0.3125 \\ -0.8000 & 0.800 & 0.0000 \\ -0.3125 & 0.000 & 0.3125 \end{bmatrix}; \quad \{f^3\} = \begin{Bmatrix} 0.0853 \\ 0.0853 \\ 0.0853 \end{Bmatrix}$$

Element 4: ($a = 0.6,\ b = 0.36,\ \beta = a/b = 1.6667,\ \alpha = b/a = 0.6$)

$$[K^4] = \begin{bmatrix} 1.1333 & -0.3000 & -0.8333 \\ -0.3000 & 0.3000 & 0.0000 \\ -0.8333 & 0.0000 & 0.8333 \end{bmatrix}; \quad \{f^1\} = \begin{Bmatrix} 0.072 \\ 0.072 \\ 0.072 \end{Bmatrix}$$

The coefficients of the assembled coefficient matrix are ($K_{IJ} = K_{JI}$)

$$\begin{aligned}
&K_{11} = K^1_{11},\ K_{12} = K^1_{12},\ K_{13} = 0,\ K_{14} = K^1_{13},\ K_{15} = 0,\ K_{16} = 0 \\
&K_{22} = K^1_{22} + K^2_{33} + K^3_{11},\ K_{23} = K^3_{12},\ K_{24} = K^1_{23} + K^2_{32} \\
&K_{25} = K^2_{31} + K^3_{13},\ K_{26} = 0,\ K_{33} = K^3_{22},\ K_{34} = 0,\ K_{35} = K^3_{23},\ K_{36} = 0 \\
&K_{44} = K^1_{33} + K^2_{22} + K^4_{11},\ K_{45} = K^2_{12} + K^4_{12},\ K_{46} = K^4_{13} \\
&K_{55} = K^2_{11} + K^3_{33} + K^4_{22},\ K_{56} = K^4_{23},\ K_{66} = K^4_{33}
\end{aligned}$$

PROPRIETARY MATERIAL. ©The McGraw-Hill Companies, Inc. All rights reserved.

The coefficients of the assembled source vector are ($F_i = f_i + Q_i$)

$$F_1 = F_1^1,\ F_2 = F_2^1 + F_3^2 + F_1^3,\ F_3 = F_2^3,\ F_4 = F_3^1 + F_2^2 + F_1^4$$
$$F_5 = F_1^2 + F_3^3 + F_2^4,\ F_6 = F_3^4$$

For a constant source, $f = f_0^e$, over an element, the source vector components are $f_i^e = f_0^e A^e/3$, where A^e is the area of the $e-$th linear triangular element. Note that $f_0^e = 2$ for all elements.

For the mesh of triangular elements shown in Figure P8.34, the boundary conditions on the primary variables are: $U_3 = 0, U_5 = 0, U_6 = 0$. Hence, the unknown primary nodal variables are: U_1, U_2, and U_4. The known secondary variables are:

$$Q_1 = Q_1^1 = 0,\ Q_2 = Q_2^1 + Q_3^2 + Q_1^3 = 0,\ Q_4 = Q_3^1 + Q_2^2 + Q_1^4 = 0$$

The condensed equations are given by

$$\begin{bmatrix} K_{11} & K_{12} & K_{14} \\ K_{21} & K_{22} & K_{24} \\ K_{41} & K_{42} & K_{44} \end{bmatrix} \begin{Bmatrix} U_1 \\ U_2 \\ U_4 \end{Bmatrix} = \begin{Bmatrix} f_1^1 \\ f_2^1 + f_3^2 + f_1^3 \\ f_3^1 + f_2^2 + f_1^4 \end{Bmatrix}$$

or

$$\begin{bmatrix} 1.0021 & -0.5333 & -0.4688 \\ -0.5333 & 2.1146 & 0.0000 \\ -0.4688 & 0.0000 & 2.1354 \end{bmatrix} \begin{Bmatrix} U_1 \\ U_2 \\ U_4 \end{Bmatrix} = \begin{Bmatrix} 0.1280 \\ 0.3413 \\ 0.3280 \end{Bmatrix}$$

The solution of these equations is (obtained with the help of a computer)

$$U_1 = 0.37413,\quad U_2 = 0.25578,\quad U_4 = 0.23573$$

Problem 8.26: Solve the axisymmetric field problem shown in Fig. 8.26 for the mesh shown there. Note that the problem has symmetry about any z = constant line. Hence, the problem is essentially one-dimensional. You are only required to determine the element matrix and source vector for element 1 and give the known boundary conditions on the primary and secondary variables.

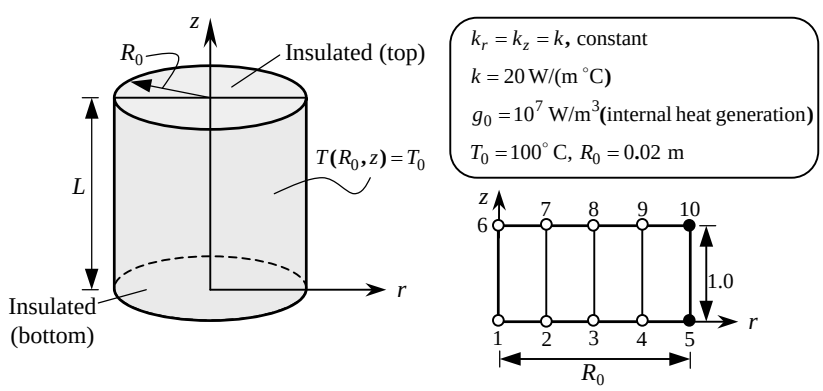

Figure P8.26

PROPRIETARY MATERIAL. ©The McGraw-Hill Companies, Inc. All rights reserved.

Solution: The internal heat generation is $g_0 = 10^7$ (W/m^3). The specified nodal values are $U_5 = U_{10} = 100$, and the secondary variable is zero at nodes 1 and 6 (because of symmetry). The solution is only a function of r, and it does not depend on z (becuase any $z =$ constant is a symmetry plane). In principle, both quantities, k and g_0, should be multiplied by 2π; since the factor 2π cancels on both sides of the equation, it is not necessary to include the factor in the data. We can take, for convenience, the length of the domain in the z-direction as the same as the element length in the r-direction.

For the mesh of rectangular elements shown in Figure P8.26, the coefficient matrices for this axisymmetric problem can be obtained as described in Section 8.2.6 but make note of the dependence on r: $a_{11} = kr$ or $\hat{a}_{11} = k$ in Eq. (8.2.74b), etc. For example, we have

$$[K^1] = \frac{k}{12b}\left(b^2\begin{bmatrix} 2 & -2 & -1 & 1 \\ -2 & 2 & 1 & -1 \\ -1 & 1 & 2 & -2 \\ 1 & -1 & -2 & 2 \end{bmatrix} + a^2\begin{bmatrix} 1 & 1 & -1 & -1 \\ 1 & 3 & -3 & -1 \\ -1 & -3 & 3 & 1 \\ -1 & -1 & 1 & 1 \end{bmatrix}\right)$$

where $k = 20$, $a = 0.005$ and $b = 1$. The source vector is given by

$$\{f^1\} = \frac{a^2 b g_0}{12}\begin{Bmatrix} 1 \\ 2 \\ 2 \\ 1 \end{Bmatrix} = \begin{Bmatrix} 20.833 \\ 41.667 \\ 41.667 \\ 20.833 \end{Bmatrix}$$

The condensed system of equations is

$$\begin{bmatrix} 3.3334 & -3.3333 & 0.0000 & \dots \\ -3.3333 & 13.3338 & -9.9999 & \dots \\ 0.0000 & -9.9999 & 26.6667 & \dots \\ \dots & \dots & \dots & \dots \end{bmatrix}\begin{Bmatrix} U_1 \\ U_2 \\ U_3 \\ \vdots \end{Bmatrix} = \begin{Bmatrix} 20.833 \\ 125.00 \\ 250.00 \\ 3875.0 \\ \vdots \end{Bmatrix}$$

The solution is given by

$$U_1 = 151.75,\ U_2 = 147.58,\ U_3 = 137.86,\ U_4 = 122.02$$

The exact solution is given by

$$T(x) = T_0 + \frac{g_0 R_0^2}{4k}\left(1 - \frac{r^2}{R_0^2}\right)$$

and at the nodes we have

$$T(0) = 150.0,\ T_2 = 146.875,\ T_3 = 137.50,\ T_4 = 121.875$$

The four-element mesh gives a very accurate solution.

PROPRIETARY MATERIAL. ©The McGraw-Hill Companies, Inc. All rights reserved.

Problem 8.27: Formulate the axisymmetric field problem shown in Fig. P8.27 for the mesh shown. You are only required to give the known boundary conditions on the primary and secondary variables and compute the secondary variable at $r = R_0/2$ using equilibrium and the definition. Use the element at the left of the node.

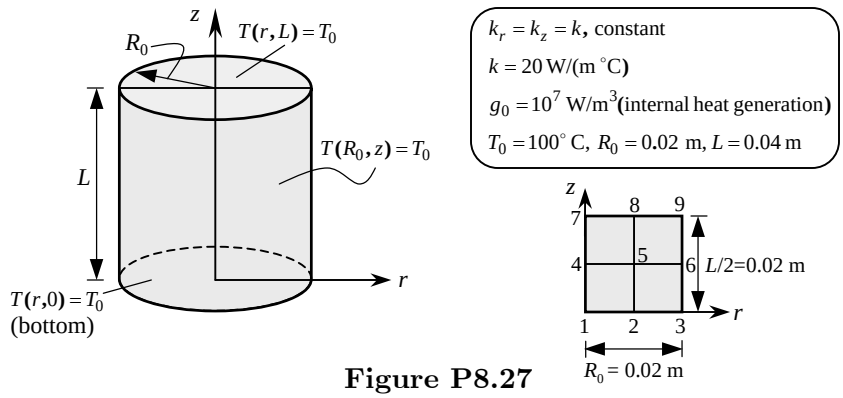

Figure P8.27

Solution: The finite element formulation of the problem is the same as discussed in Section 8.2.6. This problem differs from the one in Problem 8.26 in that the solution depends on the coordinate z. The problem has a symmetry about $r = 0$ line as well as about the $z = L/2$ line. For the mesh shown in Figure P8.27, the specified nodal values are: $U_1 = U_2 = U_3 = U_6 = U_9 = T_0$. The following values of various parameters is suggested: $L = 2R_0 = 0.04$m, $T_0 = 100°$ C, and $k = 20$ W/(m.°C). The element matrix is given in Problem 8.26 (with $a = b = 0.01$).

The specified nodal values of the primary variables are $U_1 = U_2 = U_3 = U_6 = U_7 = U_8 = U_9 = 100$. The only unknowns are U_4 and U_5. The condensed system of equations is

$$\begin{bmatrix} 0.1000 & -0.0333 \\ -0.0333 & 0.5333 \end{bmatrix} \begin{Bmatrix} U_4 \\ U_5 \end{Bmatrix} = \begin{Bmatrix} 8.333 \\ 60.000 \end{Bmatrix}$$

The solution is $U_4 = 123.40°$ C and $U_5 = 120.21°$ C. The secondary variable (heat) at node 2 is given by

$$\begin{aligned}
(Q_2^1)_{equil} &= K_{21}^1 U_1 + K_{22}^1 U_2 + K_{23}^1 U_5 + K_{24}^1 U_4 - f_2^1 \\
&= \frac{1}{60}\left(-U_1 + 5U_2 - 2U_5 - 2U_4\right) - 1.667 = -3.120 \text{ W} \\
(Q_2^1)_{def} &= -kr\frac{\partial T}{\partial z}\bigg|_{z=0,r=a} = ka\left(\frac{U_2 - U_5}{2}\right) = -2.021 \text{ W}
\end{aligned}$$

Problem 8.28: A series of heating cables have been placed in a conducting medium, as shown in Fig. P8.28. The medium has conductivities of $k_x = 10$ W/(cm°C) and

PROPRIETARY MATERIAL. ©The McGraw-Hill Companies, Inc. All rights reserved.

$k_y = 15$ W/(cm°C), the upper surface is exposed to a temperature of -5°C, and the lower surface is bounded by an insulating medium. Assume that each cable is a point source of 250 W/cm. Take the convection coefficient between the medium and the upper surface to be $\beta = 5$ W/(cm^2 K). Use a 8×8 mesh of linear rectangular (or triangular) elements in the computational domain (use symmetry available in the problem), and formulate the problem (i.e., give element matrices for a typical element, give boundary conditions on primary and secondary variables, and compute convection boundary contributions).

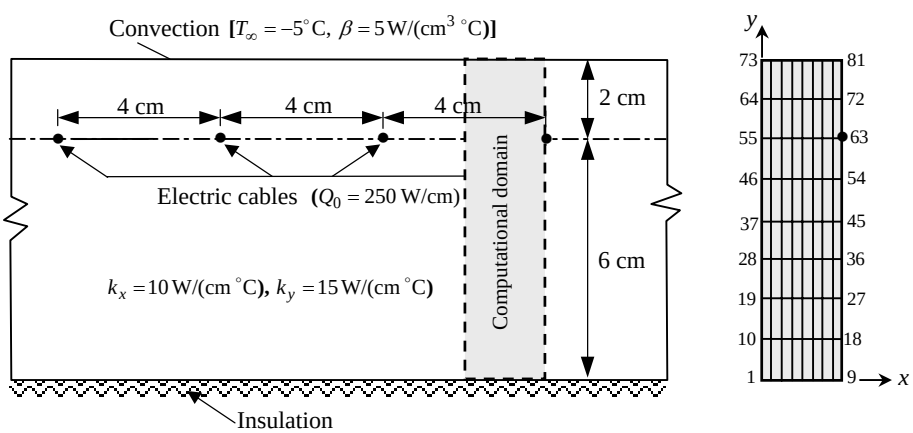

Figure P8.28

Solution: Using symmetry of the problem, we can reduce the computational domain to that shown in the figure. The heat input at the node where the cable is located is 125 W/cm. The element matrices for rectangular or triangular elements are given below:

$$[K^R] = k_x[S^{11}] + k_y[S^{22}], \quad K_{ij}^T = \frac{1}{4A}\left(k_x\beta_i\beta_j + k_y\gamma_i\gamma_j\right)$$

The boundary conditions at the upper boundary is that of convective type, at the right and left boundaries the heat flux is zero (because of symmetry), and at the lower boundary the heat flux is zero because of the insulation. The contribution due to the convective boundary condition to the element was discussed in Section 8.5.1.

For a 8×8 uniform mesh of linear triangular or rectangular elements, with the origin of the coordinate system taken at the lower left corner. The sides 1-2 of the last 8 elements (elements 57-64) are exposed to ambient temperature. There are no specified boundary conditions on the primary variables. The source 125W (per half the domain) is located at node 63.

PROPRIETARY MATERIAL. ©The McGraw-Hill Companies, Inc. All rights reserved.

Problem 8.29: Formulate the finite element analysis information to determine the temperature distribution in the molded asbestos insulation shown in Fig. P8.29. Use the symmetry to identify a computational domain and give the specified boundary conditions at the nodes of the mesh. What is the connectivity of matrix for the mesh shown?

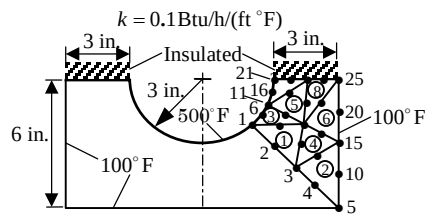

Figure P8.29

Solution: The computational domain is shown in Figure P8.29 (the finite element mesh part). The heat flux is zero along the insulated boundary and line of symmetry. Nodes 5, 10, 15, 20, and 25 have a specified temperature of 100°F, and nodes 1, 6, 11, 16, and 21 have a specified temperature of 500° F. The assembled coefficient matrix is of order 25 × 25, and the condensed coefficient matrix is of order 15 × 15. The connectivity matrix is given by

$$\begin{bmatrix} 1 & 3 & 13 & 2 & 8 & 7 \\ 3 & 5 & 15 & 4 & 10 & 9 \\ 1 & 13 & 11 & 6 & 7 & 12 \\ 3 & 15 & 13 & 8 & 9 & 14 \\ 11 & 13 & 23 & 12 & 18 & 17 \\ 13 & 15 & 25 & 14 & 20 & 19 \\ 11 & 23 & 21 & 17 & 22 & 16 \\ 13 & 25 & 23 & 19 & 24 & 18 \end{bmatrix}$$

Problem 8.30: Consider steady-state heat conduction in a square region of side $2a$. Assume that the medium has conductivity of k (in W/(m°C) and uniform heat (energy) generation of f_0 (in W/m^3). For the boundary conditions and mesh shown in Fig. P8.30, write the finite element algebraic equations for nodes 1, 3, and 7.

Solution: The algebraic equations associated with nodes 1, 3, and 7 are:

$$K_{11}T_1 + K_{12}T_2 + K_{14}T_4 + K_{15}T_5 = F_1$$
$$K_{32}T_2 + K_{33}T_3 + K_{35}T_5 + K_{36}T_6 = F_3$$
$$K_{74}T_4 + K_{75}T_5 + K_{77}T_7 + K_{78}T_8 = F_8$$

PROPRIETARY MATERIAL. ©The McGraw-Hill Companies, Inc. All rights reserved.

where $T_3 = T_6 = T_0$ and

$$K_{11} = K_{11}^1,\ K_{12} = K_{12}^1,\ K_{14} = K_{14}^1,\ K_{15} = K_{13}^1,\ F_1 = \frac{g_0 a^2}{4} + \frac{q_0 a}{2}$$
$$K_{32} = K_{21}^2,\ K_{33} = K_{22}^2,\ K_{35} = K_{24}^2,\ K_{36} = K_{23}^2,\ F_3 = \frac{g_0 a^2}{4} + Q_2^2$$
$$K_{74} = K_{41}^3,\ K_{75} = K_{42}^3,\ K_{77} = K_{44}^3 + H_{44}^3,\ K_{78} = K_{43}^3 + H_{43}^3$$
$$F_7 = \frac{g_0 a^2}{4} + \frac{q_0 a}{2} + P_4^3$$

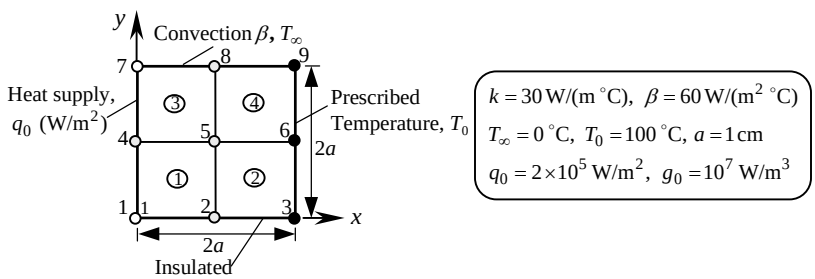

Figure P8.30

Note that the equation associated with node 3 will be used to compute Q_2^2. The coefficients H_{ij}^e and P_i^e are defined in Eqs. (8.5.10a, b):

$$H_{44}^e = \frac{a\beta}{3},\ H_{43}^e = \frac{a\beta}{6},\ P_4^e = \frac{aT_\infty\beta}{2}$$

We have

$$K_{11} = \frac{4}{6}k,\ K_{12} = -\frac{k}{6},\ K_{13} = -\frac{2}{6}k,\ K_{14} = -\frac{k}{6},\ K_{22} = \frac{4}{6}k$$
$$K_{23} = -\frac{k}{6},\ K_{24} = -\frac{2}{6}k,\ K_{33} = \frac{4}{6}k,\ K_{34} = -\frac{k}{6},\ K_{44} = \frac{4}{6}k$$

For $a = 0.01$m, $k = 30$ W/(m·°C), $\beta = 60$ W/(m^2·°C), $T_\infty = 0.0$, $T_0 = 100$°C, $q_0 = 2 \times 10^5$ W/m^2, and $g_0 = 10^7$ W/m^3, the nodal values are:

$$T_1 = 297.06,\quad T_2 = 214.58,\quad T_4 = 295.98,\quad T_5 = 213.83$$
$$T_7 = 292.15,\ T_8 = 210.88$$

Problem 8.31: For the convection heat transfer problem shown in Fig. P8.31, write the four finite element equations for the unknown temperatures. Assume that the thermal conductivity of the material is $k = 5$ W/(m°C), the convection heat transfer coefficient on the left surface is $\beta = 28$ W/(m^2°C), and the internal heat generation

PROPRIETARY MATERIAL. ©The McGraw-Hill Companies, Inc. All rights reserved.

is zero. Compute the heats at nodes 2, 4 and 9 using (a) element equations (i.e., equilibrium), and (b) definition (use the temperature field of elements 1 and 2).

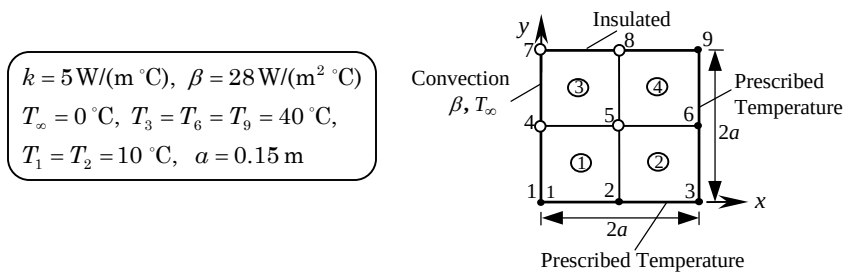

Figure P8.31

Solution: There are four algebraic equations associated with nodal unknowns T_4, T_5, T_7 and T_8:

$$
\begin{aligned}
&(K^1_{44} + K^4_{11} + H^1_{44} + H^4_{11})T_4 + (K^1_{43} + K^4_{12})T_5 + (K^4_{14} + H^4_{14})T_7 + K^4_{13}T_8 \\
&\qquad = -(K^1_{41} + H^1_{41})T_1 - K^1_{42}T_2 && (i)\\
&(K^1_{34} + K^4_{21})T_4 + (K^1_{33} + K^2_{44} + K^3_{11} + K^4_{22})T_5 + K^4_{24}T_7 + (K^4_{23} + K^3_{14})T_8 \\
&\qquad = -K^3_{13}T_9 - K^1_{31}T_1 - (K^1_{32} + K^2_{41})T_2 - K^2_{42}T_3 - (K^2_{43} + K^3_{12})T_6 && (ii)\\
&(K^4_{41} + H^4_{41})T_4 + K^4_{42}T_5 + (K^4_{44} + H^4_{44})T_7 + K^4_{43}T_8 = 0 && (iii)\\
&K^4_{31}T_4 + (K^4_{32} + K^3_{41})T_5 + K^4_{34}T_7 + (K^4_{33} + K^3_{44})T_8 \\
&\qquad = -K^3_{42}T_6 - K^3_{43}T_9 && (iv)
\end{aligned}
$$

The heat at node 2 is given from the assembled equation associated with node 2:

$$Q_2 = K^1_{21}T_1 + (K^1_{22} + K^2_{11})T_2 + K^2_{12}T_3 + K^1_{24}T_4 + (K^1_{23} + K^2_{14})T_5 + K^2_{13}T_6 - \frac{g_0 a^2}{2}$$

Note that $g_0 = 0$ in this problem. By definition,

$$Q_2 = Q^1_2 + Q^2_1 = k\int_0^a \psi^1_2 \frac{\partial T}{\partial y}^{(1)} dx + k\int_0^a \psi^2_1 \frac{\partial T}{\partial y}^{(2)} dx$$

Similar equations can be written for heats at nodes 4 and 9.

Problem 8.32: Write the finite element equations for the unknown temperatures of the problem shown in Fig. P8.32.

PROPRIETARY MATERIAL. ©The McGraw-Hill Companies, Inc. All rights reserved.

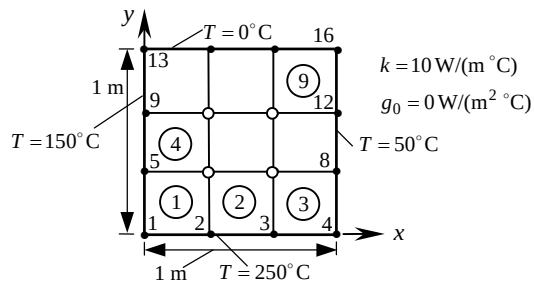

Figure P8.32

Solution: There are four algebraic equations associated with nodal unknowns (Ts used in place of Us) T_6, T_7, T_{10} and T_{11}:

$$(K^1_{33} + K^2_{44} + K^4_{22} + K^5_{11})T_6 + (K^2_{43} + K^5_{12})T_7 + (K^4_{23} + K^5_{14})T_{10} + K^5_{13}T_{11}$$
$$= -K^1_{31}T_1 - (K^1_{32} + K^2_{41})T_2 - K^2_{42}T_3 - (K^1_{34} + K^4_{21})T_5 - K^4_{24}T_9$$

Similar equations can be written for nodes 7, 10 and 11.

Problem 8.33: Write the finite element equations for the heats at nodes 1 and 13 of Problem 8.32. The answer should be in terms of the nodal temperatures T_1, T_2,..., T_{16}.

Solution: We have

$$Q^1_1 = (K^1_{11}T_1 + K^1_{12}T_2 + K^1_{13}T_6 + K^1_{14}T_5)$$
$$Q^7_4 = (K^7_{41}T_9 + K^7_{42}T_{10} + K^7_{43}T_{14})$$

Problem 8.34: Write the finite element equations associated with nodes 13, 16, and 19 for the problem shown in Fig. P8.34.

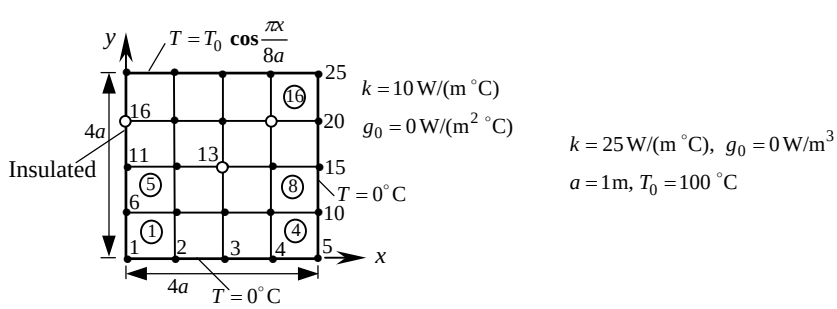

Figure P8.34

PROPRIETARY MATERIAL. ©The McGraw-Hill Companies, Inc. All rights reserved.

Solution: This is a straight forward problem. Here equation for node 13 is given. The equation for node 13 will have contributions from elements 6, 7, 10 and 11 (and nodes 7, 8, 9, 12, 13, 14, 17, 18, and 19):

$$\begin{aligned}&K_{31}^{6}U_7 + (K_{32}^{6} + K_{41}^{7})U_8 + K_{42}^{7}U_9 + (K_{34}^{6} + K_{21}^{10})U_{12}\\&+ (K_{33}^{6} + K_{44}^{7} + K_{22}^{10} + K_{11}^{11})U_{13} + (K_{43}^{7} + K_{12}^{11})U_{14}\\&+ K_{24}^{10}U_{17} + (K_{23}^{10} + K_{14}^{11})U_{18} + K_{13}^{11}U_{19} = 0\end{aligned}$$

Similarly, the equation for node 16 will have contributions from elements 9 and 13 (nodes 11, 12, 16, 17, 21 and 22), and temperature at nodes 21 and 22 are known. The equation for node 19 will have contributions from elements 11, 12, 15 and 16 (nodes 13, 14, 15, 18, 19, 20, 23, 24 and 25), and temperatures at nodes 15, 20, 23, 24, and 25 are known.

Problem 8.35: The fin shown in Fig. P8.35 has its base maintained at 300°C and exposed to convection on its remaining boundary. Write the finite element equations at nodes 7 and 10.

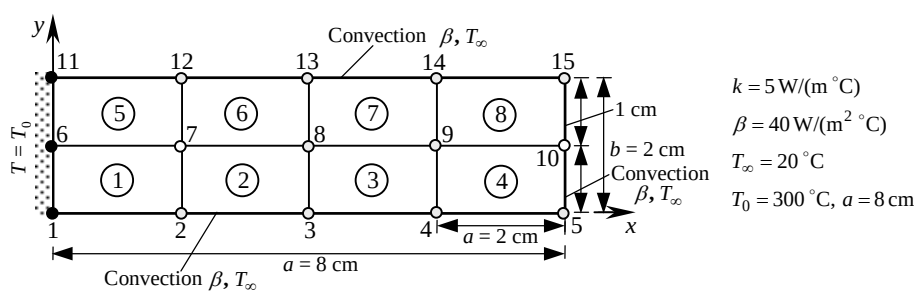

Figure P8.35

Solution: The equations for node 7 is given by

$$\begin{aligned}&(K_{32}^{1} + K_{41}^{2})U_2 + K_{42}^{2}U_3 + (K_{43}^{2} + K_{12}^{6})U_8 + (K_{23}^{5} + K_{14}^{6})U_{12} + K_{13}^{6}U_{13}\\&= -K_{31}^{1}U_1 - (K_{34}^{1} + K_{21}^{5})U_6 - K_{24}^{5}U_{11}\end{aligned}$$

where $U_1 = U_6 = U_{11} = T_0$. The equation for node 10 involves convection terms. We have

$$\begin{aligned}&K_{31}^{4}U_4 + (K_{32}^{4} + H_{32}^{4})U_5 + (K_{34}^{4} + K_{21}^{8})U_9 + (K_{33}^{4} + K_{22}^{8} + H_{33}^{4} + H_{22}^{8})U_{10}\\&+ K_{24}^{8}U_{14} + (K_{23}^{8} + H_{23}^{8})U_{15} = P_3^4 + P_2^8\end{aligned}$$

The element coefficients K_{ij}^e, H_{ij}^e and P_i^e are given by Eqs. (8.2.54), (8.5.10a) and (8.5.10b), respectively. For example, H_{32}^e from Eq. (8.5.10a) is $\beta_{23}^e h_{23}^e/6$ whereas H_{33}^e is $2\beta_{23}^e h_{32}^e/6$. Note that H_{33}^e contribution comes, in the present problem, from the side connecting local nodes 2 and 3.

PROPRIETARY MATERIAL. ©The McGraw-Hill Companies, Inc. All rights reserved.

Problem 8.36: Compute the heat loss at nodes 10 and 13 of Problem 8.35.

Solution: The heats at nodes 10 and 13 can be computed from the definition:

$$Q_{10} = k\int_0^1 \psi_3^4(y)\frac{\partial T_h^4}{\partial x}dy + k\int_0^1 \psi_2^8(y)\frac{\partial T_h^8}{\partial x}dy$$

$$Q_{13} = k\int_0^2 \psi_3^6(x)\frac{\partial T_h^6}{\partial y}dx + k\int_0^2 \psi_4^7(x)\frac{\partial T_h^7}{\partial y}dx$$

where T_h^e is replaced by the finite element interpolation $T_h^e = \sum T_i^e \psi_i^e(x,y)$.

The formulative effort for Problems 37–42 involves mesh generation. The boundary conditions are very apparent from the problem data. For computer solution of these problems, see Chapter 13 solutions. Here we only make some comments on each problem.

Problem 8.37: Consider the problem of the flow of groundwater beneath a coffer dam. Formulate the problem using the velocity potential for finite element analysis. The geometry and boundary conditions are shown in Fig. P8.37.

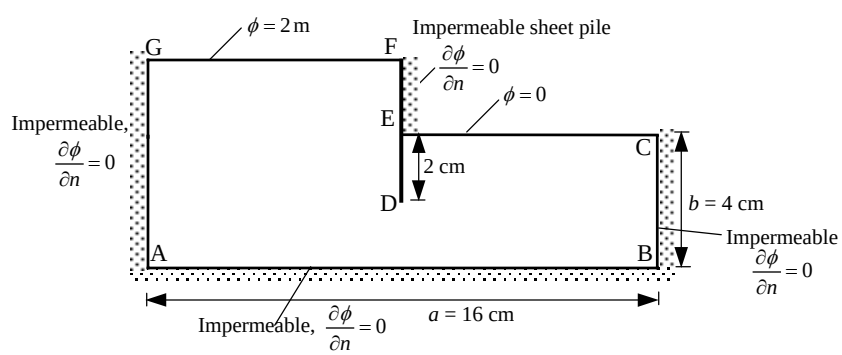

Figure P8.37

Solution: On boundary segments AB, BC, EF and AG, natural boundary conditions are specified to be zero. On GF, EC and ED boundary conditions on the primary variable ϕ are specified.

Problem 8.38: Formulate the groundwater flow problem of the domain shown in Fig. P8.38 for finite element analysis. The pump is located at $(x, y) = (550, 400)$ m.

PROPRIETARY MATERIAL. ©The McGraw-Hill Companies, Inc. All rights reserved.

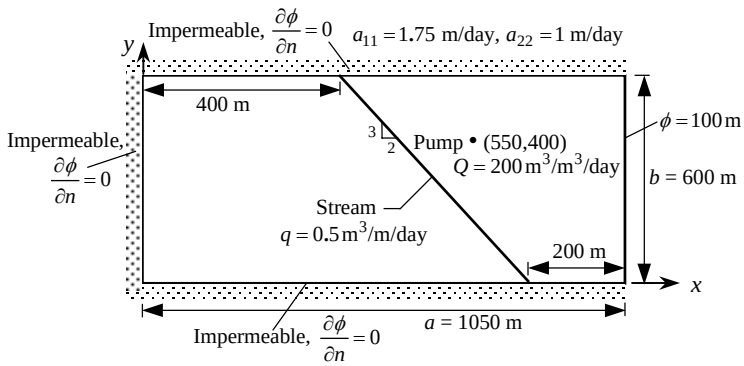

Figure P8.38

Solution: This problem is similar to the one in Example 8.5.4. Primary variable is specified at nodes on $x = 1050$ m line. The specified nonzero secondary variables are at the nodes along the river and at the pump. The values can be determined once the mesh is selected.

Problem 8.39: Repeat Prob. 8.38 for the domain shown in Fig. P8.39.

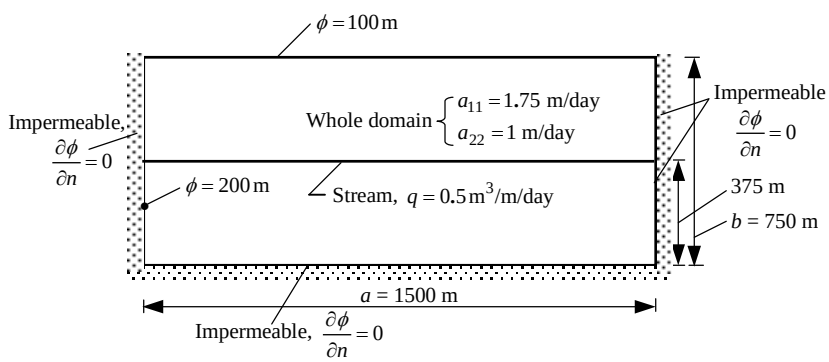

Figure P8.39

Solution: The primary variable is specified at nodes on the top boundary and also at one node on the left boundary. Non-zero specified secondary variables are at nodes along the river.

Problem 8.40: Consider the steady confined flow through the foundation soil of a dam (see Fig. P8.40). Assuming that the soil is isotropic ($k_x = k_y$), formulate the problem for finite element analysis (identify the specified primary and secondary variables and their contribution to the nodes). In particular, write the finite element equations at nodes 8 and 11. Write the finite element equations for the horizontal velocity component in 5th and 10th elements.

PROPRIETARY MATERIAL. ©The McGraw-Hill Companies, Inc. All rights reserved.

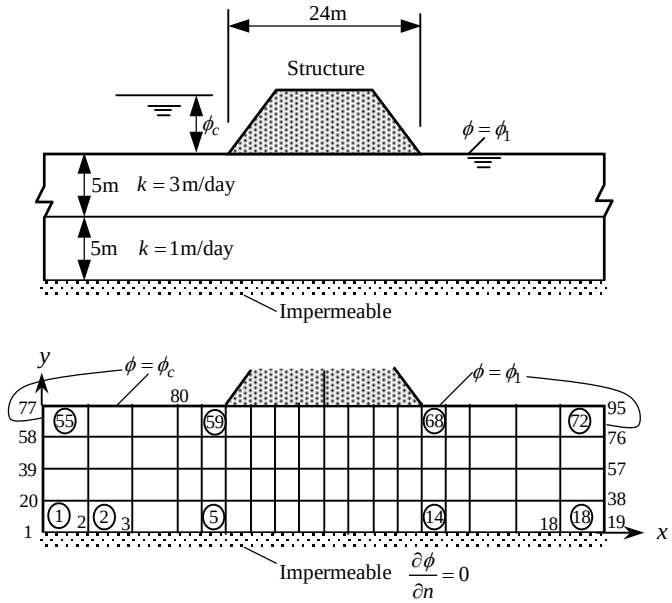

Figure P8.40

Solution: For this problem, the primary variable is specified at nodes 1, 20, 39, 58 and 77-81 (ϕ_c) and 19, 38, 57, 76 and 91-95 (ϕ_1). There are no specified non-zero secondary variables.

Problem 8.41: Formulate the problem of the flow about an elliptical cylinder using the (a) stream function and (b) velocity potential. The geometry and boundary conditions are shown in Fig. P8.41.

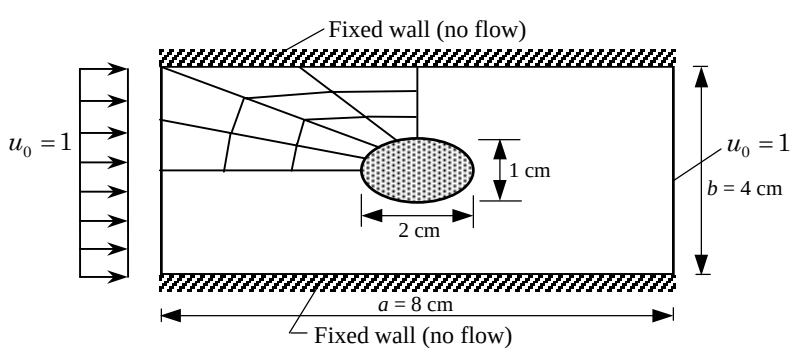

Figure P8.41

PROPRIETARY MATERIAL. © The McGraw-Hill Companies, Inc. All rights reserved.

Solution: This problem is similar to that in Example 8.5.5.

(a) *Stream function formulation* On the left boundary, the primary variable (ψ) is specified to be $\psi = yu_0$ on the left boundary, $\psi = 2u_0$ on the top wall, and $\psi = 0$ on the bottom wall as well as on the elliptical boundary.

(b) *Velocity potential formulation* On the left boundary, the primary variable (ϕ) is specified to be $\phi = 0$ on the right boundary. The secondary variable $\frac{\partial \phi}{\partial n}$ is specified to be zero at the top and bottom walls as well as on the elliptical boundary; it is equal to $-u_0$ on the left boundary.

Problem 8.42: Repeat Problem 8.41 for the domain shown in Fig. P8.42.

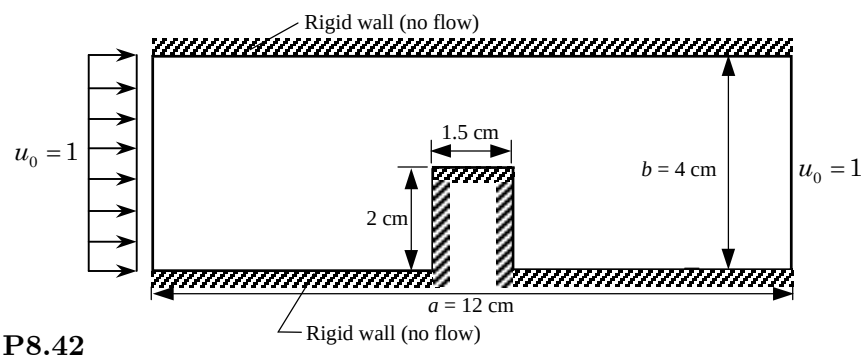

Figure P8.42

Solution: By symmetry, only one half of the domain needs to be modeled.

(a) *Stream function formulation* On the left boundary, the primary variable (ψ) is specified to be $\psi = yu_0$ on the left boundary, $\psi = 4u_0$ on the top wall, and $\psi = 0$ on the bottom wall as well as on the rectangular boundary.

(b) *Velocity potential formulation* On the left boundary, the primary variable (ϕ) is specified to be $\phi = 0$ on the right boundary. The secondary variable $\frac{\partial \phi}{\partial n}$ is specified to be zero at the top and bottom walls as well as on the rectangular boundary; it is equal to $-u_0$ on the left boundary.

Problem 8.43: The Prandtl theory of torsion of a cylindrical member leads to

$$-\nabla^2 u = 2G\theta \quad \text{in} \quad \Omega; \quad u = 0 \quad \text{on } \Gamma$$

where Ω is the cross section of the cylindrical member being twisted, Γ is the boundary of Ω, G is the shear modulus of the material of the member, θ is the angle of twist, and u is the stress function. Solve the equation for the case in which Ω is a circular section (see Fig. P8.43) using the mesh of linear triangular elements. Compare the finite-element solution with the exact solution (valid for elliptical sections with axes

PROPRIETARY MATERIAL. ©The McGraw-Hill Companies, Inc. All rights reserved.

a and b):

$$u = \frac{G\theta a^2 b^2}{a^2 + b^2}\left(1 - \frac{x^2}{a^2} - \frac{y^2}{b^2}\right)$$

Use $a = 1$, $b = 1$, and $f_0 = 2G\theta = 10$.

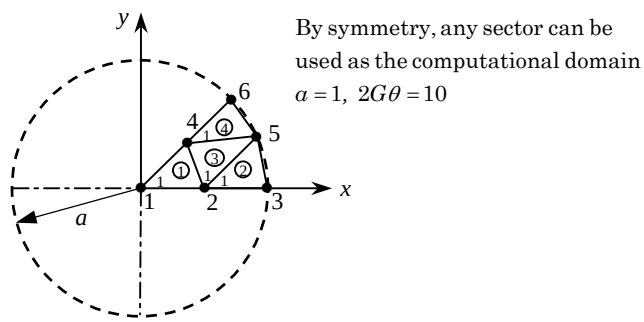

Figure P8.43

Solution: For the mesh shown in a quadrant, the specified degrees of freedom are: $U_3 = U_5 = U_6 = 0$, and the values at nodes 1, 2 and 4 are to be determined. The condensed equations are

$$\begin{aligned} K_{11}U_1 + K_{12}U_2 + K_{14}U_4 &= F_1 \\ K_{21}U_1 + K_{22}U_2 + K_{24}U_4 &= F_2 \\ K_{41}U_1 + K_{42}U_2 + K_{44}U_4 &= F_4 \end{aligned}$$

where

$$\begin{aligned} &K_{11} = K_{11}^1,\ K_{12} = K_{12}^1,\ K_{14} = K_{13}^1,\ \ K_{22} = K_{22}^1 + K_{11}^2 + K_{11}^3 \\ &K_{24} = K_{23}^1 + K_{13}^3,\ K_{44} = K_{33}^1 + K_{33}^3 + K_{11}^4 \\ &F_1 = \frac{f_0 A_1}{3},\ F_2 = \frac{f_0}{3}(A_1 + A_2 + A_3),\ F_4 = \frac{f_0}{3}(A_1 + A_3 + A_4) \end{aligned}$$

and A_i is the area of the ith element and $f_0 = 2G\theta = 10$. The condensed equations are given by

$$\begin{bmatrix} 0.4142 & -0.2071 & -0.2071 \\ -0.2071 & 1.8969 & -1.1141 \\ -0.2071 & -1.1141 & 1.8969 \end{bmatrix} \begin{Bmatrix} U_1 \\ U_2 \\ U_4 \end{Bmatrix} = \begin{Bmatrix} 0.2946 \\ 0.9567 \\ 0.9567 \end{Bmatrix}$$

The solution of these equations is: $U_1 = 2.6292$, $U_2 = 1.9179$, $U_4 = 1.9179$. The exact solution at these is given by $u_1 = 2.5$, $u_2 = 1.875$, $u_4 = 1.875$.

Problem 8.44: Repeat Problem 8.43 for an elliptical section member (see Fig. P8.44). Use $a = 1$ and $b = 1.5$.

PROPRIETARY MATERIAL. ©The McGraw-Hill Companies, Inc. All rights reserved.

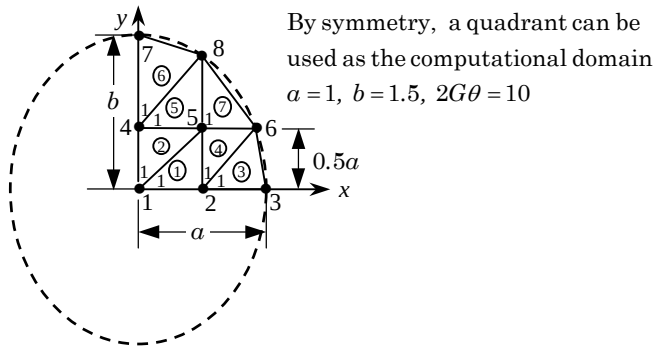

Figure P8.44

Solution: Use the mesh shown in Fig. P8.44 and note that the nodes 6, 7, and 8 lie on the parabola; the specified degrees of freedom are: $U_3 = U_6 = U_7 = U_8 = 0$, and the values at nodes 1, 2, 4, and 5 are to be determined. The condensed equations are

$$\begin{aligned}
&K_{11}U_1 + K_{12}U_2 + K_{14}U_4 + K_{15}U_5 = F_1\\
&K_{21}U_1 + K_{22}U_2 + K_{25}U_5 = F_2\\
&K_{41}U_1 + K_{44}U_4 + K_{45}U_5 = F_4\\
&K_{51}U_1 + K_{52}U_2 + K_{54}U_4 + K_{55}U_5 = F_5
\end{aligned}$$

where

$$\begin{aligned}
&K_{11} = K_{11}^1 + K_{11}^2,\ K_{12} = K_{12}^1,\ K_{14} = K_{13}^2,\quad K_{15} = K_{13}^1 + K_{12}^2\\
&K_{22} = K_{22}^1 + K_{11}^3 + K_{11}^4,\quad K_{44} = K_{33}^2 + K_{11}^5 + K_{11}^6,\quad K_{45} = K_{32}^2 + K_{12}^5\\
&K_{55} = K_{33}^1 + K_{22}^2 + K_{33}^4 + K_{22}^5 + K_{11}^7,\quad F_1 = \frac{f_0}{3}(A_1 + A_2)\\
&F_2 = \frac{f_0}{3}(A_1 + A_3 + A_4),\ F_4 = \frac{f_0}{3}(A_2 + A_5 + A_6)\\
&F_5 = \frac{f_0}{3}(A_1 + A_2 + A_4 + A_5 + A_7)
\end{aligned}$$

and A_i is the area of the ith element and $f_0 = 2G\theta = 10$. The solution of the condensed equations yield $U_1 = 3.6389$, $U_2 = 2.5448$, $U_4 = 3.0663$, $U_5 = 2.0565$. The exact solution at these nodes is $u_1 = 3.4615$, $u_2 = 2.5961$, $u_4 = 3.0769$, $u_5 = 2.2115$.

Problem 8.45: Repeat Prob. 8.43 for the case in which Ω is an equilateral triangle (see Fig. P8.45). The exact solution is given by

$$u = -G\theta\left[\frac{1}{2}\left(x^2 + y^2\right) - \frac{1}{2}a\left(x^3 - 3xy^2\right) - \frac{2}{27}a^2\right]$$

PROPRIETARY MATERIAL. ©The McGraw-Hill Companies, Inc. All rights reserved.

Take $a = 1$ and $f_0 = 2G\theta = 10$. Give the finite element equation for node 5.

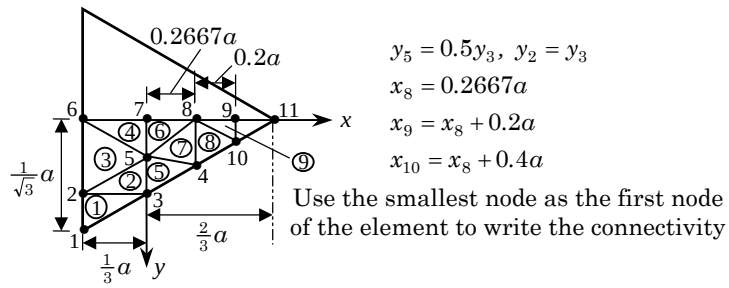

Figure P8.45

Solution: The coordinate y can be computed from the equation

$$0 = \frac{1}{2}\left(x^2 + y^2\right) - \frac{1}{2}a\left(x^3 - 3xy^2\right) - \frac{2}{27}a^2$$

for any given x. The known primary degrees of freedom are

$$U_1 = U_2 = U_3 = U_4 = U_6 = U_{10} = U_{11} = 0$$

The condensed system of equations is 5×5 for the unknowns U_5, U_7, U_8 and U_9. The finite element equation for node is

$$K_{55}U_5 + K_{57}U_7 + K_{58}U_8 = F_5$$

where

$$K_{55} = K_{33}^2 + K_{22}^3 + K_{11}^4 + K_{33}^5 + K_{11}^6 + K_{33}^7, \quad K_{57} = K_{12}^4 + K_{13}^6$$
$$K_{58} = K_{12}^6 + K_{32}^7, \quad F_5 = \frac{f_0}{3}\left(A_2 + A_3 + A_4 + A_5 + A_6 + A_7\right)$$

Problem 8.46: Consider the torsion of a hollow square cross section member. The stress function Ψ is required to satisfy the Poisson equation (8.5.60) and the following boundary conditions:

$$\Psi = 0 \quad \text{on the outer boundary;} \quad \Psi = 2r^2 \quad \text{on the inner boundary}$$

where r is the ratio of the outside dimension to the inside dimension, $r = 6a/2a$. Formulate the problem for finite element analysis using the mesh shown in Fig. P8.46.

PROPRIETARY MATERIAL. ©The McGraw-Hill Companies, Inc. All rights reserved.

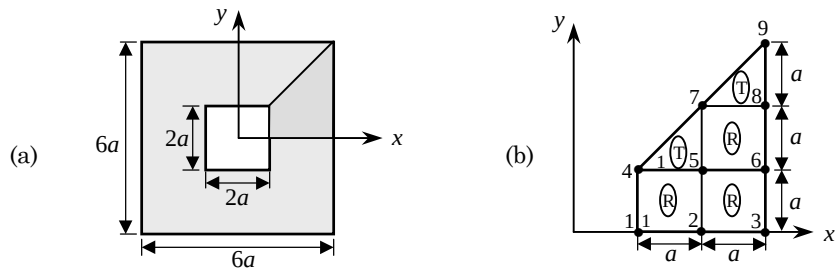

Figure P8.46

Solution: The ratio of outside to inside dimensions is 3. Hence, $\Psi = 18$. The value of Ψ at nodes 3, 6, 8 and 9 is zero, and at nodes 1 and 4 it is 18. Thus the unknown values are at nodes 2, 5, and 7. We have

$$
\begin{aligned}
&K_{22}U_2 + K_{25}U_5 = -K_{21}U_1 - K_{24}U_4 \\
&K_{52}U_2 + K_{55}U_5 + K_{57}U_7 = -K_{51}U_1 - K_{54}U_4 \\
&K_{75}U_5 + K_{77}U_7 = -K_{74}U_4
\end{aligned}
$$

where

$$K_{21} = K_{21}^R,\ K_{22} = K_{11}^R + K_{22}^R,\ K_{24} = K_{24}^R,\ K_{25} = K_{23}^R + K_{14}^R$$

$$K_{51} = K_{31}^R,\ K_{54} = K_{34}^R + K_{21}^T,\ K_{55} = K_{11}^R + K_{33}^R + K_{44}^R + K_{22}^T,\ K_{57} = K_{14}^R + K_{23}^T$$

and the coefficient matrices associated with rectangular (R) and triangular (T) elements are

$$[K^T] = \frac{1}{2}\begin{bmatrix} 1 & -1 & 0 \\ -1 & 2 & -1 \\ 0 & -1 & 1 \end{bmatrix}, \quad [K^R] = \frac{1}{6}\begin{bmatrix} 4 & -1 & -2 & -1 \\ -1 & 4 & -1 & -2 \\ -2 & -1 & 4 & -1 \\ -1 & -2 & -1 & 4 \end{bmatrix}$$

are the element matrices associated with the triangular element (right-angle is numbered as node 2) and rectangular element. The source coefficients for these elements are ($a = b$):

$$f_i^T = \frac{2ab}{6}, \quad f_i^R = \frac{2ab}{4}$$

PROPRIETARY MATERIAL. ©The McGraw-Hill Companies, Inc. All rights reserved.

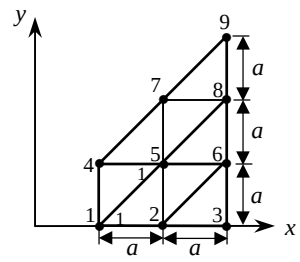

Figure P8.46(b)

Solution: For the case of the mesh of triangles, all element matrices are the same and equal to $[K^T]$ of Problem 8.46. The finite element equations associated with nodes 2, 5 and 7 are

$$K_{22}U_2 + K_{25}U_5 = -K_{21}U_1$$
$$K_{52}U_2 + K_{55}U_5 + K_{57}U_7 = -K_{51}U_1 - K_{54}U_4$$
$$K_{75}U_5 + K_{77}U_7 = -K_{74}U_4$$

with

$$K_{21} = K_{21}^T,\ K_{22} = K_{22}^T + K_{11}^T + K_{33}^T,\ K_{25} = K_{23}^T + K_{32}^T$$
$$K_{51} = K_{13}^T + K_{31}^T,\ K_{54} = K_{12}^T + K_{21}^T$$
$$K_{55} = 2\left(K_{11}^T + K_{33}^T + K_{22}^T\right),\ K_{57} = K_{23}^T + K_{32}^T$$

The condensed equations are given by

$$\begin{bmatrix} 2.0 & -1.0 & 0.0 \\ -1.0 & 4.0 & -1.0 \\ 0.0 & -1.0 & 0.5 \end{bmatrix} \begin{Bmatrix} U_2 \\ U_5 \\ U_7 \end{Bmatrix} = \begin{Bmatrix} 1.0 \\ 0.0 \\ 18.0 \end{Bmatrix} + \begin{Bmatrix} 1.0 \\ 2.0 \\ 1.0 \end{Bmatrix}$$

The solution of these equations is: $U_2 = 9.25,\ U_5 = 8.5,\ U_7 = 4.75$.

Problem 8.48: The membrane shown in Fig. P8.48 is subjected to uniformly distributed load of intensity $f_0 = 1$ N/m^2. Write the condensed equations for the unknown displacements.

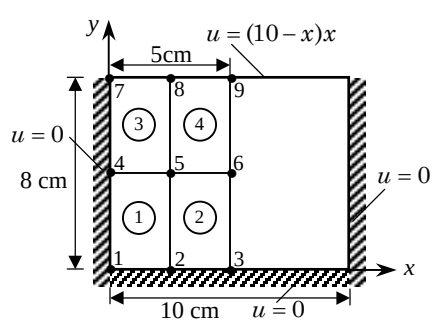

Figure P8.48

PROPRIETARY MATERIAL. ©The McGraw-Hill Companies, Inc. All rights reserved.

Solution: For 2×2 mesh of linear rectangular elements, the only unknown nodal values are U_5 and U_6. All elements are identical, with the same element cofficient matrix. The equations governing the unknown nodal values are:

$$K_{55}U_5 + K_{56}U_6 = 4\frac{f_0 ab}{4} - (K_{58}U_8 + K_{59}U_9)$$
$$K_{56}U_5 + K_{66}U_6 = 2\frac{f_0 ab}{4} - (K_{68}U_8 + K_{69}U_9)$$

where $U_8 = 0.1875$ m and $U_9 = 0.25$ m. Using the element matrix in Eq. (8.2.54) ($a = 0.025$ m and $b = 0.04$ m), we can write the above equations as

$$\begin{bmatrix} 2.9667 & -0.8583 \\ -0.8583 & 1.4833 \end{bmatrix} \begin{Bmatrix} U_5 \\ U_6 \end{Bmatrix} = 10^{-2} \begin{Bmatrix} 0.10 \\ 0.05 \end{Bmatrix} + \begin{Bmatrix} 0.07083 \\ 0.05495 \end{Bmatrix} = \begin{Bmatrix} 0.07183 \\ 0.05545 \end{Bmatrix}$$

The solution of these equations is $U_5 = 4.2072$ cm and $U_6 = 6.1726$ cm.

Problem 8.49: The circular membrane shown in Fig. P8.49 is subjected to uniformly distributed load of intensity f_0 (in N/m^2). Write the condensed equations for the unknown displacements.

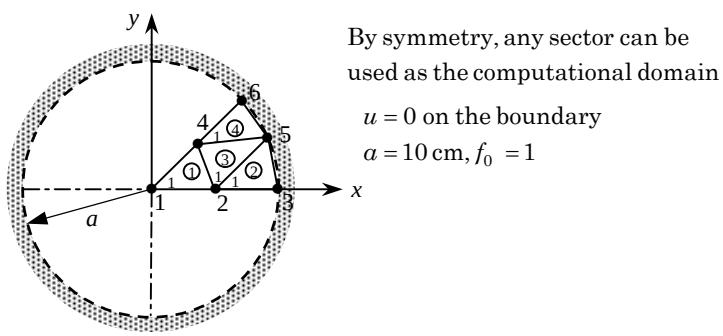

Figure P8.49

Solution: This problem is similar to that solved in Problem 8.43. For the mesh shown in a quadrant, the specified degrees of freedom are: $U_3 = U_5 = U_6 = 0$, and the values at nodes 1, 2 and 4 are to be determined. The condensed equations are

$$K_{11}U_1 + K_{12}U_2 + K_{14}U_4 = F_1$$
$$K_{21}U_1 + K_{22}U_2 + K_{24}U_4 = F_2$$
$$K_{41}U_1 + K_{42}U_2 + K_{44}U_4 = F_4$$

where

$$K_{11} = K_{11}^1,\ K_{12} = K_{12}^1,\ K_{14} = K_{13}^1,\quad K_{22} = K_{22}^1 + K_{11}^2 + K_{11}^3$$
$$K_{24} = K_{23}^1 + K_{13}^3,\ K_{44} = K_{33}^1 + K_{33}^3 + K_{11}^4$$
$$F_1 = \frac{f_0 A_1}{3},\ F_2 = \frac{f_0}{3}(A_1 + A_2 + A_3),\ F_4 = \frac{f_0}{3}(A_1 + A_3 + A_4)$$

PROPRIETARY MATERIAL. ©The McGraw-Hill Companies, Inc. All rights reserved.

and A_i is the area of the ith element.

The condensed equations are given by

$$\begin{bmatrix} 0.4142 & -0.2071 & -0.2071 \\ -0.2071 & 1.8968 & -1.1141 \\ -0.2071 & -1.1141 & 1.8969 \end{bmatrix} \begin{Bmatrix} U_1 \\ U_2 \\ U_4 \end{Bmatrix} = 10^{-3} f_0 \begin{Bmatrix} 0.2946 \\ 0.9567 \\ 0.9567 \end{Bmatrix}$$

The solution of these equations is: $U_1 = 0.2629 \times 10^{-2} f_0$ m, $U_2 = 0.1918 \times 10^{-2} f_0$ m, $U_4 = U_2$.

Problem 8.50: Determine the critical time step for the transient analysis (with $\alpha \leq \frac{1}{2}$) of the problem

$$\frac{\partial u}{\partial t} - \nabla^2 u = 1 \quad \text{in } \Omega; \quad u = 0 \quad \text{in } \Omega \text{ at } t = 0$$

by determining the maximum eigenvalue of the problem

$$-\nabla^2 u = \lambda u \quad \text{in } \Omega; \quad u = 0 \quad \text{on } \Gamma$$

The domain is a square of 1 unit. Use (a) one triangular element in the octant, (b) 4 linear elements in the octanta, and (c) a 2×2 mesh of linear rectangular elements in a quadrant (see Fig. P8.50). Determine the critical time step for the forward difference scheme.

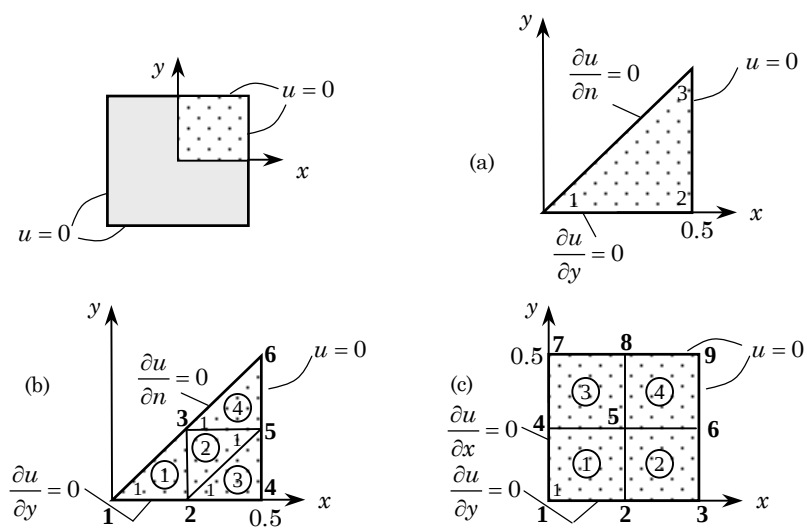

Figure P8.50

(a) The finite element equations of a right-angle triangular element of sides a and b for the given equation are ($a = b = 0.5$; see Example 8.6.1)

$$\frac{1}{96} \begin{bmatrix} 2 & 1 & 1 \\ 1 & 2 & 1 \\ 1 & 1 & 2 \end{bmatrix} \begin{Bmatrix} \dot{U}_1 \\ \dot{U}_2 \\ \dot{U}_3 \end{Bmatrix} + \frac{1}{2} \begin{bmatrix} 1 & -1 & 0 \\ -1 & 2 & -1 \\ 0 & -1 & 1 \end{bmatrix} \begin{Bmatrix} U_1 \\ U_2 \\ U_3 \end{Bmatrix} = \begin{Bmatrix} Q_1 \\ Q_2 \\ Q_3 \end{Bmatrix}$$

PROPRIETARY MATERIAL. ©The McGraw-Hill Companies, Inc. All rights reserved.

The boundary conditions are: $U_2 = U_3 = 0$ and $Q_1 = 0$. The eigenvlue problem associated with this equation is

$$\left(-\frac{\lambda}{96}\begin{bmatrix}2 & 1 & 1\\ 1 & 2 & 1\\ 1 & 1 & 2\end{bmatrix} + \frac{1}{2}\begin{bmatrix}1 & -1 & 0\\ -1 & 2 & -1\\ 0 & -1 & 1\end{bmatrix}\right)\begin{Bmatrix}U_1\\ 0\\ 0\end{Bmatrix} = \begin{Bmatrix}0\\ Q_2\\ Q_3\end{Bmatrix}$$

The condensed equation $-\lambda/48 + 1/2 = 0$ gives $\lambda = 24$. The critical time step is $\Delta t_{\text{cr}} = 2/\lambda = 0.0833$.

(b) Using the mesh of linear triangular elements shown in Fig. P8.50(b), we obtain the following condensed equations ($a = b = 0.25$)

$$\left(-\frac{\lambda}{384}\begin{bmatrix}2 & 1 & 1\\ 1 & 6 & 2\\ 1 & 2 & 6\end{bmatrix} + \frac{1}{2}\begin{bmatrix}1 & -1 & 0\\ -1 & 4 & -2\\ 0 & -2 & 4\end{bmatrix}\right)\begin{Bmatrix}U_1\\ U_2\\ U_3\end{Bmatrix} = \begin{Bmatrix}0\\ 0\\ 0\end{Bmatrix}$$

The roots of the resulting characterstic polynomial are (obtained using an eigenvalue solver): $\lambda_1 = 21.6582$, $\lambda_2 = 152.793$, $\lambda_3 = 305.549$. Hence, the critical time step for conditionally stable scheme like the forward difference scheme ($\alpha = 0.0$) is $\Delta t_{cr} = \frac{2}{\lambda_{max}} = 6.5456 \times 10^{-3}$.

(c) Using the 2×2 mesh of linear rectangular elements (each element is a square of side $a = 0.25$) shown in Fig. P8.50(c), we obtain the following assembled equations

$$\left(-\frac{\lambda}{576}\begin{bmatrix}4 & 2 & 2 & 1\\ 2 & 8 & 1 & 2\\ 2 & 1 & 8 & 2\\ 1 & 2 & 2 & 16\end{bmatrix} + \frac{1}{6}\begin{bmatrix}4 & -1 & -1 & -2\\ -1 & 8 & 2 & -1\\ -1 & 2 & 8 & -1\\ -2 & -1 & -1 & 16\end{bmatrix}\right)\begin{Bmatrix}U_1\\ U_2\\ U_4\\ U_5\end{Bmatrix} = \begin{Bmatrix}0\\ 0\\ 0\\ 0\end{Bmatrix}$$

The roots of the resulting characterstic polynomial are: $\lambda_1 = 38.607$, $\lambda_2 = 82.286$, $\lambda_3 = 126.279$, and $\lambda_4 = 236.815$. Hence, the critical time step for the forward difference scheme is $\Delta t_{cr} = \frac{2}{\lambda_{max}} = 8.445 \times 10^{-3}$.

Problem 8.51: Write the condensed equations for the transient problem in Prob. 8.50 for the α-family of approximation. Use the mesh shown in Fig. P8.50(b).

Solution: Using the mesh shown in Figure 8.12b of page 325, we obtain the following condensed equations for the time-dependent case:

$$\frac{1}{384}\begin{bmatrix}2 & 1 & 1\\ 1 & 6 & 2\\ 1 & 2 & 6\end{bmatrix}\begin{Bmatrix}\dot{U}_1\\ \dot{U}_2\\ \dot{U}_4\end{Bmatrix} + \frac{1}{2}\begin{bmatrix}1 & -1 & 0\\ -1 & 4 & -2\\ 0 & -2 & 4\end{bmatrix}\begin{Bmatrix}U_1\\ U_2\\ U_4\end{Bmatrix} = \begin{Bmatrix}0.041667\\ 0.125\\ 0.125\end{Bmatrix}$$

The α-family of approximation results in Eqs. (8.6.10a, b), where $[M]$ and $[K]$ are obvious from the above equation.

PROPRIETARY MATERIAL. ©The McGraw-Hill Companies, Inc. All rights reserved.

Problem 8.52: Write the condensed equations for the time-dependent analysis of the circular membrane in Problem 8.49.

Solution: For the mesh given in Fig. P8.60, the condensed equations are given by (the mass matrix coefficients are to be computed for each element to obtain the condensed mass matrix)

$$10^{-4}\begin{bmatrix} 1.473 & 0.736 & 0.736 \\ 0.736 & 4.784 & 1.595 \\ 0.736 & 1.595 & 4.784 \end{bmatrix}\begin{Bmatrix} \ddot{U}_1 \\ \ddot{U}_2 \\ \ddot{U}_4 \end{Bmatrix} + \begin{bmatrix} 0.4142 & -0.2071 & -0.2071 \\ -0.2071 & 1.8969 & -1.1141 \\ -0.2071 & -1.1141 & 1.8969 \end{bmatrix}\begin{Bmatrix} U_1 \\ U_2 \\ U_4 \end{Bmatrix}$$

$$= \begin{Bmatrix} 0.02946 \\ 0.09567 \\ 0.09567 \end{Bmatrix}$$

The Newmark family of approximation results in Eqs. (8.6.20a, b), where $[M]$ and $[K]$ are clear from the above equation.

Problem 8.53: Determine the fundamental natural frequency of the rectangular membrane in Problem 8.48.

Solution: For 2×2 mesh of linear rectangular elements shown in Fig. P8.48, the only unknown nodal values are U_5 and U_6. All other nodal values as well as the loads are zero for a natural vibration analysis (and the problem becomes one in Example 8.6.3) The eigenvalue problem for natural frequencies becomes:

$$\left(-\lambda\begin{bmatrix} M_{55} & M_{56} \\ M_{65} & M_{66} \end{bmatrix} + \begin{bmatrix} K_{55} & K_{56} \\ K_{65} & K_{66} \end{bmatrix}\right)\begin{Bmatrix} U_5 \\ U_6 \end{Bmatrix} = \begin{Bmatrix} 0 \\ 0 \end{Bmatrix}$$

where $\lambda = \omega^2$, square of the natural frequency, ω. Numerical form of the above equation is

$$\left(-10^{-3}\lambda\begin{bmatrix} 0.4444 & 0.1111 \\ 0.1111 & 0.4444 \end{bmatrix} + \begin{bmatrix} 2.9667 & -0.8583 \\ -0.8583 & 1.4833 \end{bmatrix}\right)\begin{Bmatrix} U_5 \\ U_6 \end{Bmatrix} = \begin{Bmatrix} 0 \\ 0 \end{Bmatrix}$$

The eigenvalues (square of the frequencies) are $\lambda_1 = 2,913.66$, and $\lambda_2 = 14,550.6$. Thus, the fundamental frequency is $\omega_1 = 53.978$. The exact value from Example 8.6.3 is 50.290.

Problem 8.54: Determine the critical time step based on the forward difference scheme for the time-dependent analysis of the circular membrane in Problem 8.49.

Solution: Using the results of Problem 8.52, we obtain the following eigenvalue problem:

$$\left(-10^{-4}\lambda\begin{bmatrix} 1.473 & 0.736 & 0.736 \\ 0.736 & 4.784 & 1.595 \\ 0.736 & 1.595 & 4.784 \end{bmatrix} + \begin{bmatrix} 0.4142 & -0.2071 & -0.2071 \\ -0.2071 & 1.8969 & -1.1141 \\ -0.2071 & -1.1141 & 1.8969 \end{bmatrix}\right)\begin{Bmatrix} U_1 \\ U_2 \\ U_4 \end{Bmatrix}$$

PROPRIETARY MATERIAL. ©The McGraw-Hill Companies, Inc. All rights reserved.

$$= \begin{Bmatrix} 0 \\ 0 \\ 0 \end{Bmatrix}$$

The eigenvalues (square of the frequencies) are $\lambda_1 = 611.90$, $\lambda_2 = 4,688.72$ and $\lambda_3 = 9,441.68$. Hence, the critical time step for the forward difference scheme is $\Delta t_{cr} = \frac{2}{\lambda_{max}} = 0.212 \times 10^{-3}$.

Problem 8.55: (*Central difference method*) Consider the following matrix differential equation in time:

$$[M]\{\ddot{U}\} + [C]\{\dot{U}\} + [K]\{U\} = \{F\}$$

where the superposed dot indicates differentiation with respect to time. Assume

$$\{\ddot{U}\}_n = \frac{1}{(\Delta t)^2}(\{U\}_{n-1} - 2\{U\}_n + \{U\}_{n+1})$$
$$\{\dot{U}\}_n = \frac{1}{2(\Delta t)}(\{U\}_{n+1} - \{U\}_{n-1})$$

and derive the algebraic equations for the solution of $\{U\}_{n+1}$ in the form

$$[A]\{U\}_{n+1} = \{F\}_n - [B]\{U\}_n - [D]\{U\}_{n-1}$$

Define $[A]$, $[B]$, and $[D]$ in terms of $[M]$, $[C]$, and $[K]$.

Solution: Premultiply the first equation (of the approximation) by $[M]_n$ and the second one by $[C]_n$, and add the resulting equations. Then substitute for $\{\ddot{U}\}_n$ and $\{\dot{U}\}_n$ from the given equation of motion. Collecting the coefficients, the derived equation is obtained with,

$$[A] = \left(\frac{2}{\Delta t^2}[M]_n + \frac{1}{2\Delta t}[C]_n\right)$$
$$[B] = \left([K]_n - \frac{2}{\Delta t^2}[M]_n\right)$$
$$[D] = \left(\frac{1}{\Delta t^2}[M]_n - \frac{1}{2\Delta t}[C]_n\right)$$

Problem 8.56: Consider the first-order differential equation in time

$$a\frac{du}{dt} + bu = f$$

Using linear approximation, $u(t) = u_1\psi_1(t) + u_2\psi_2(t)$, $\psi_1 = 1 - t/\Delta t$, and $\psi_2 = t/\Delta t$, derive the associated algebraic equation and compare with that obtained using the α-family of approximation.

PROPRIETARY MATERIAL. ©The McGraw-Hill Companies, Inc. All rights reserved.

Solution: The weighted-integral statement is given by

$$0 = \int_0^{\Delta t} w \left(a\frac{du}{dt} + bu - f \right) dt$$

Substituting the interpolation for $u = u_n\psi_n + u_{n+1}\psi_{n+1}$ and taking $w = \psi_1 = \psi_n$ and $w = \psi_2 = \psi_{n+1}$, we obtain the equations for the time interval $[t_n, t_{n+1}]$:

$$\left(\frac{a}{2}\begin{bmatrix} -1 & 1 \\ -1 & 1 \end{bmatrix} + \frac{b\Delta t}{6}\begin{bmatrix} 2 & 1 \\ 1 & 2 \end{bmatrix} \right) \begin{Bmatrix} u_n \\ u_{n+1} \end{Bmatrix} = \frac{\Delta t}{6}\begin{bmatrix} 2 & 1 \\ 1 & 2 \end{bmatrix} \begin{Bmatrix} f_n \\ f_{n+1} \end{Bmatrix}$$

where f is also interpolated as $f = f_n\psi_n + f_{n+1}\psi_{n+1}$. Now we assume that the solution at time t_n is known and we wish to determine that at t_{n+1}. Thus we solve the second of the two equations for u_{n+1} in terms of u_n, t_n, and t_{n+1}:

$$\left(a + \frac{2}{3}b\Delta t \right) u_{n+1} = \left(a - \frac{1}{3}b\Delta t \right) u_n = \frac{\Delta t}{3}\left(f_n + 2f_{n+1} \right) \qquad (i)$$

Next let us apply the α-family of approximation to the equation. We obtain

$$\left(a + \alpha\Delta t b \right) u_{n+1} = \left[a - (1-\alpha)\Delta t b \right] u_n + \Delta t \left[(1-\alpha) f_n + \alpha f_{n+1} \right] \qquad (ii)$$

Comparing Eq. (i) with Eq. (ii), we note that they are the same for $\alpha = 2/3$. Thus, the Galerkin method is a subset of the α-family of approximation.

Problem 8.57: (*Space-time element*) Consider the differential equation

$$c\frac{\partial u}{\partial t} - \frac{\partial}{\partial x}\left(a\frac{\partial u}{\partial x} \right) = f \quad \text{for} \quad 0 < x < L, \quad 0 \le t \le T$$

with

$$u(0,t) = u(L,t) = 0 \quad \text{for} \quad 0 \le t \le T \quad u(x,0) = u_0(x) \quad \text{for} \quad 0 < x < L$$

where $c = c(x)$, $a = a(x)$, $f = f(x,t)$, and u_0 are given functions. Consider the rectangular domain defined by

$$\Omega = \{(x,t) : 0 < x < L, \quad 0 \le t \le T\}$$

A finite-element discretization of Ω by rectangles is a time-space rectangular element (with y replaced by t). Give a finite-element formulation of the equation over a time-space element, and discuss the *mathematical/practical* limitations of such a formulation. Compute the element matrices for a linear element.

PROPRIETARY MATERIAL. ©The McGraw-Hill Companies, Inc. All rights reserved.

Solution: The finite element model *over a rectangular element* is given by $[K]\{u\} = \{F\}$, where

$$K_{ij} = \int_0^{\Delta t}\int_{x_a}^{x_b}\left(c\ \psi_i\frac{\partial\psi_j}{\partial t} + a\frac{\partial\psi_i}{\partial x}\frac{\partial\psi_j}{\partial x}\right)dxdt \qquad (i)$$

$$F_i = \int_0^{\Delta t}\left(a\frac{\partial u}{\partial x}\psi_i\right)\Big|_{x=x_a}^{x=x_b}dt + \int_{x_a}^{x_b}\int_0^{\Delta t} f\ \psi_i\, dxdt \qquad (ii)$$

For the case in which a and c are constant, and ψ_i are the linear interpolation functions of a (time-space) rectangular element,

$$\psi_1 = \left(1-\frac{x}{\Delta x}\right)\left(1-\frac{t}{\Delta t}\right),\ \psi_2 = \frac{x}{\Delta x}\left(1-\frac{t}{\Delta t}\right)$$
$$\psi_3 = \frac{x}{\Delta x}\frac{t}{\Delta t},\ \psi_4 = \left(1-\frac{x}{\Delta x}\right)\frac{t}{\Delta t} \qquad (iii)$$

the element matrix can be readily evaluated. Indeed, we have

$$[K^e] = a[S^{11}] + c[S^{02}] \qquad (iv)$$

where $[S^{11}]$ is given in Eq. (8.2.52) and $[S^{02}]$ is given in the soolution to Problem 8.10. We have

$$[K^e] = a\frac{\Delta t}{6\Delta x}\begin{bmatrix} 2 & -2 & -1 & 1 \\ -2 & 2 & 1 & -1 \\ -1 & 1 & 2 & -2 \\ 1 & -1 & -2 & 2 \end{bmatrix} + c\frac{\Delta x}{12}\begin{bmatrix} -2 & -1 & 1 & 2 \\ -1 & -2 & 2 & 1 \\ -1 & -2 & 2 & 1 \\ -2 & -1 & 1 & 2 \end{bmatrix}$$

or

$$[K] = \frac{\Delta x}{12}\begin{bmatrix} -2c+4ar & -c-4ar & c-2ar & 2c+2ar \\ -c-4ar & -2c+4ar & 2c+2ar & c-2ar \\ -c-2ar & -2c+2ar & 2c+4ar & c-4ar \\ -2c+2ar & -c-2ar & c-4ar & 2c+4ar \end{bmatrix} \qquad (v)$$

where $r = \Delta t/(\Delta x)^2$.

Problem 8.58: (*Space-time finite element*) Consider the time-dependent problem

$$\frac{\partial^2 u}{\partial x^2} = c\frac{\partial u}{\partial t}, \quad \text{for } 0 < x < 1, \quad t > 0$$

$$u(0,t) = 0, \quad \frac{\partial u}{\partial x}(1,t) = 1, \quad u(x,0) = x$$

Use linear rectangular elements in the (x,t)-plane to model the problem. Note that the finite-element model is given by $[K^e]\{u^e\} = \{Q^e\}$, where

$$K_{ij}^e = \int_0^{\Delta t}\int_{x_a}^{x_b}\left(\frac{\partial\psi_i^e}{\partial x}\frac{\partial\psi_j^e}{\partial x} + c\psi_i\frac{\partial\psi_j}{\partial t}\right)\ dx\ dt$$

PROPRIETARY MATERIAL. ©The McGraw-Hill Companies, Inc. All rights reserved.

$$Q_1^e = \left(-\int_0^{\Delta t} \frac{\partial u}{\partial x}\, dt \right) \Big|_{x=x_a}, \quad Q_2^e = \left(\int_0^{\Delta t} \frac{\partial u}{\partial x}\, dt \right) \Big|_{x=x_b}$$

Solution: For one space-time element mesh, we have the equations

$$\frac{\Delta x}{12} \begin{bmatrix} -2c+4r & -c-4r & c-2r & 2c+2r \\ -c-4r & -2c+4r & 2c+2r & c-2r \\ -c-2r & -2c+2r & 2c+4r & c-4r \\ -2c+2r & -c-2r & c-4r & 2c+4r \end{bmatrix} \begin{Bmatrix} U_1 \\ U_2 \\ U_3 \\ U_4 \end{Bmatrix} = \begin{Bmatrix} Q_1 \\ Q_2 \\ Q_3 \\ Q_4 \end{Bmatrix} \tag{1}$$

The "boundary conditions" are: $U_1 = 0$, $U_2 = \Delta x$, $U_4 = 0$, $Q_3 = \Delta t$. Note that we have no condition given at $t = \Delta t$. This amounts to assuming that $\partial u/\partial t = 0$. The value at the node 3 (i.e., $U_3 = u(\Delta x, \Delta t)$) can be determined easily from Eq. (1),

$$\frac{\Delta x}{12} \left[(-2c+2r)U_2 + (2c+4r)U_3 \right] = Q_3$$

or

$$\left[2c + 4\frac{\Delta t}{(\Delta x)^2} \right] U_3 = 14\frac{\Delta t}{\Delta x} + 2c\Delta x$$

For $c = c_0 r$, we have the result,

$$U_3 = \frac{14 + 2c_0}{4 + 2c_0} \Delta x$$

The α-family of approximation yields the equation

$$\left(\frac{c\Delta x}{6} \begin{bmatrix} 2 & 1 \\ 1 & 2 \end{bmatrix} + \frac{\alpha \Delta t}{\Delta x} \begin{bmatrix} 1 & -1 \\ -1 & 1 \end{bmatrix} \right) \begin{Bmatrix} U_{1n+1} \\ U_{2n+1} \end{Bmatrix}$$
$$= \left(\frac{c\Delta x}{6} \begin{bmatrix} 2 & 1 \\ 1 & 2 \end{bmatrix} - \frac{(1-\alpha)\Delta t}{\Delta x} \begin{bmatrix} 1 & -1 \\ -1 & 1 \end{bmatrix} \right) \begin{Bmatrix} U_{1n} \\ U_{2n} \end{Bmatrix} + \Delta t \begin{Bmatrix} Q_1 \\ Q_2 \end{Bmatrix}$$

Using $U_1 = 0, Q_2 = 1$ and $U_2^{n+1} = \Delta x$, we obtain

$$\left(c\frac{\Delta x}{3} + \alpha \frac{\Delta t}{\Delta x} \right) U_2^{n+1} = \left(-(1-\alpha)\frac{\Delta t}{\Delta x} + c\frac{\Delta x}{3} \right) \Delta x + \Delta t$$

For $c = c_0 r$, we have the result, $U_3 = \Delta x$.

While the two results differ quite a bit, it should not be taken seriously in view of the coarse mesh taken and the special boundary and initial conditions used. In general, the space-time finite elements have a natural drawback in redefining the initial-boundary value problem as an equivalent boundary value problem.

PROPRIETARY MATERIAL. ©The McGraw-Hill Companies, Inc. All rights reserved.

Problem 8.59: The collocation time approximation methods are defined by the following relations:

$$\{\ddot{u}\}_{n+\alpha} = (1-\alpha)\{\ddot{u}\}_n + \alpha\{\ddot{u}\}_{n+1}$$

$$\{\dot{u}\}_{n+\alpha} = \{\dot{u}\}_n + \alpha\Delta t[(1-\gamma)\{\ddot{u}\}_n + \gamma\{\ddot{u}\}_{n+\alpha}]$$

$$\{u\}_{n+\alpha} = \{u\}_n + \alpha\Delta t\{\dot{u}\}_n + \frac{\alpha(\Delta t)^2}{2}[(1-2\beta)\{\ddot{u}\}_n + 2\beta\{\ddot{u}\}_{n+\alpha}]$$

The collocation scheme contains two of the well-known schemes: $\alpha = 1$ gives the Newmark's scheme; $\beta = \frac{1}{6}$ and $\gamma = \frac{1}{2}$ gives the Wilson scheme. The collocation scheme is unconditionally stable, second-order accurate for the following values of the parameters:

$$\alpha \geq 1, \quad \gamma = \frac{1}{2}, \quad \frac{\alpha}{2(1+\alpha)} \geq \beta \geq \frac{2\alpha^2 - 1}{4(2\alpha^3 - 1)}$$

Formulate the algebraic equations associated with the matrix differential equation

$$[M]\{\ddot{u}\} + [C]\{\dot{u}\} + [K]\{u\} = \{F\}$$

using the collocation scheme.

Solution: Consider the equation

$$[M]\{\ddot{u}\} + [C]\{\dot{u}\} + [K]\{u\} = \{F\} \tag{1}$$

and the equations of the collocation scheme

$$\{\ddot{u}\}_{s+\alpha} = (1-\alpha)\{\ddot{u}\}_s + \alpha\{\ddot{u}\}_{s+1} \tag{2}$$

$$\{\dot{u}\}_{s+\alpha} = \{\dot{u}\}_s + \alpha\Delta t\,[(1-\gamma)\{\ddot{u}\}_s + \gamma\{\ddot{u}\}_{s+\alpha}] \tag{3}$$

$$\{u\}_{s+\alpha} = \{u\}_s + \alpha\Delta t\{\dot{u}\}_s + \alpha\frac{(\Delta t)^2}{2}\,[(1-2\beta)\{\ddot{u}\}_s + 2\beta\{\ddot{u}\}_{s+\alpha}] \tag{4}$$

Like in Problem 6.23, we formulate the final equation for the acceleration vector. This is done by writing Eq. (1) for $t = t_{s+\alpha}$ and substituting for the acceleration, velocity, and displacement at $t_{s+\alpha}$ from Eqs. (2), (3), and (4), respectively. In using Eqs. (3) and (4), the acceleration at $t_{s+\alpha}$ is replaced by Eq. (2). We obtain

$$[\hat{H}]_{s+\alpha}\{\ddot{u}\}_{s+1} = \{\hat{F}\}_{s+\alpha} - [\hat{M}]_{s+\alpha}\{\ddot{u}\}_s - [\hat{C}]_{s+\alpha}\{\dot{u}\}_s - [K]_{s+\alpha}\{u\}_s \tag{5}$$

where

$$[\hat{H}]_{s+\alpha} = \alpha\left([M]_{s+\alpha} + c_1[C]_{s+\alpha} + c_2[K]_{s+\alpha}\right)$$

$$[\hat{M}]_{s+\alpha} = ((1-\alpha)[M]_{s+\alpha} + c_3[C]_{s+\alpha} + c_4[K]_{s+\alpha})$$

PROPRIETARY MATERIAL. ©The McGraw-Hill Companies, Inc. All rights reserved.

$$[\hat{C}]_{s+\alpha} = [C]_{s+\alpha} + \alpha\Delta t[K]_{s+\alpha},\ \{\hat{F}\}_{s+\alpha} = (1-\alpha)\{F\}_s + \alpha\{F\}_{s+1}$$
$$c_1 = \alpha\gamma\Delta t,\ c_2 = \alpha\beta(\Delta t)^2,\ c_3 = \alpha(1-\alpha\gamma)\Delta t,\ (0.5-\alpha\beta)\alpha(\Delta t)^2 \tag{6}$$

Once the acceleration is known, Eqs. (3) and (4) can be used to compute the velocity and displacement at time t_{s+1}.

Problem 8.60: Consider the following pair of coupled partial differential equations:

$$-\frac{\partial}{\partial x}\left(a\frac{\partial u}{\partial x}\right) - \frac{\partial}{\partial y}\left[b\left(\frac{\partial u}{\partial y} + \frac{\partial v}{\partial x}\right)\right] + \frac{\partial u}{\partial t} - f_x = 0 \tag{1}$$

$$-\frac{\partial}{\partial x}\left[b\left(\frac{\partial u}{\partial y} + \frac{\partial v}{\partial x}\right)\right] - \frac{\partial}{\partial y}\left(c\frac{\partial v}{\partial y}\right) + \frac{\partial v}{\partial t} - f_y = 0 \tag{2}$$

where u and v are the dependent variables (unknown functions), a, b and c are known functions of x and y, and f_x and f_y are known functions of position (x, y) and time t.

(a) Use the three-step procedure on each equation with a different weight function for each equation (say, w_1 and w_2) to develop the (semidiscrete) weak form.

(b) Assume finite element approximation of (u, v) in the following form

$$u(x,y) = \sum_{j=1}^{n} \psi_j(x,y)U_j(t)\ ,\quad v(x,y) = \sum_{j=1}^{n} \psi_j(x,y)V_j(t) \tag{3}$$

and develop the (semidiscrete) finite element model in the form

$$0 = \sum_{j=1}^{n} M_{ij}^{11}\dot{U}_j + \sum_{j=1}^{n} K_{ij}^{11}U_j + \sum_{j=1}^{n} K_{ij}^{12}V_j - F_i^1$$
$$0 = \sum_{j=1}^{n} M_{ij}^{22}\dot{V}_j + \sum_{j=1}^{n} K_{ij}^{21}U_j + \sum_{j=1}^{n} K_{ij}^{22}V_j - F_i^2 \tag{4}$$

You must define the algebraic form of the element coefficients $K_{ij}^{11},\ K_{ij}^{12},\ F_i^1$ etc.

(c) Give the fully discretized finite element model of the model (in the standard form; you are not required to derive it).

Solution:

(a) The weak forms are given by

$$\begin{aligned} 0 &= \int_{\Omega^e} w_1\left\{-\frac{\partial}{\partial x}\left(a\frac{\partial u}{\partial x}\right) - \frac{\partial}{\partial y}\left[b\left(\frac{\partial u}{\partial y} + \frac{\partial v}{\partial x}\right)\right] + \frac{\partial u}{\partial t} - f_x\right\} dxdy \\ &= \int_{\Omega^e}\left\{a\frac{\partial w_1}{\partial x}\frac{\partial u}{\partial x} + \frac{\partial w_1}{\partial y}\left[b\left(\frac{\partial u}{\partial y} + \frac{\partial v}{\partial x}\right)\right] + w_1\frac{\partial u}{\partial t} - w_1 f_x\right\} dxdy \\ &\quad + \oint_{\Gamma^e} w_1 t_x\ ds \end{aligned} \tag{5}$$

PROPRIETARY MATERIAL. ©The McGraw-Hill Companies, Inc. All rights reserved.

$$
\begin{aligned}
0 &= \int_{\Omega^e} w_2 \left\{ -\frac{\partial}{\partial x}\left[b\left(\frac{\partial u}{\partial y}+\frac{\partial v}{\partial x}\right)\right] - \frac{\partial}{\partial y}\left(c\frac{\partial v}{\partial y}\right) + \frac{\partial v}{\partial t} - f_y \right\} dxdy \\
&= \int_{\Omega^e} \left\{ \frac{\partial w_2}{\partial x}\left[b\left(\frac{\partial u}{\partial y}+\frac{\partial v}{\partial x}\right)\right] + c\frac{\partial w_2}{\partial y}\frac{\partial v}{\partial y} + w_2\frac{\partial v}{\partial t} - w_2 f_y \right\} dxdy \\
&\quad + \oint_{\Gamma^e} w_2 t_y \; ds
\end{aligned} \tag{6}
$$

where

$$
t_x = a\frac{\partial u}{\partial x}n_x + \left[b\left(\frac{\partial u}{\partial y}+\frac{\partial v}{\partial x}\right)\right] n_y, \quad t_y = \left[b\left(\frac{\partial u}{\partial y}+\frac{\partial v}{\partial x}\right)\right] n_x + c\frac{\partial v}{\partial y}n_y \tag{7}
$$

(b) The finite element model is given by Eq. (4) with the following coefficients:

$$
\begin{aligned}
M_{ij}^{11} &= \int_{\Omega^e} \psi_i \psi_j \; dxdy \\
M_{ij}^{22} &= \int_{\Omega^e} \psi_i \psi_j \; dxdy \\
K_{ij}^{11} &= \int_{\Omega^e} \left(a\frac{\partial \psi_i}{\partial x}\frac{\partial \psi_j}{\partial x} + b\frac{\partial \psi_i}{\partial y}\frac{\partial \psi_j}{\partial y}\right) dxdy \\
K_{ij}^{12} &= \int_{\Omega^e} b\frac{\partial \psi_i}{\partial y}\frac{\partial \psi_j}{\partial x} \; dxdy = K_{ji}^{21} \\
K_{ij}^{22} &= \int_{\Omega^e} \left(b\frac{\partial \psi_i}{\partial x}\frac{\partial \psi_j}{\partial x} + c\frac{\partial \psi_i}{\partial y}\frac{\partial \psi_j}{\partial y}\right) dxdy \\
F_i^1 &= \int_{\Omega^e} f_x \psi_i \; dxdy + \oint_{\Gamma^e} t_x \psi_i \; ds \\
F_i^2 &= \int_{\Omega^e} f_y \psi_i \; dxdy + \oint_{\Gamma^e} t_y \psi_i \; ds
\end{aligned} \tag{8}
$$

(c) The pair of equations in (4) can be written in matrix form as

$$
\begin{bmatrix} [M^{11}] & [0] \\ [0] & [M^{22}] \end{bmatrix} \begin{Bmatrix} \{\dot{U}\} \\ \{\dot{V}\} \end{Bmatrix} + \begin{bmatrix} [K^{11}] & [K^{12}] \\ [K^{21}] & [K^{22}] \end{bmatrix} \begin{Bmatrix} \{U\} \\ \{V\} \end{Bmatrix} = \begin{Bmatrix} \{F^1\} \\ \{F^2\} \end{Bmatrix}
$$

or

$$
[M]\{\dot{\Delta}\} + [K]\{\Delta\} = \{F\} \tag{9}
$$

which is in the standard form of a parabolic equation [see Eq. (8.6.6b)]. Hence, the fully discretized finite element model is given by Eqs. (8.6.10a) and (8.6.10b).

PROPRIETARY MATERIAL. © The McGraw-Hill Companies, Inc. All rights reserved.

PROPRIETARY AND CONFIDENTIAL

This Manual is the proprietary property of The McGraw-Hill Companies, Inc. ("McGraw-Hill") and protected by copyright and other state and federal laws. By opening and using this Manual the user agrees to the following restrictions, and if the recipient does not agree to these restrictions, the Manual should be promptly returned unopened to McGraw-Hill: **This Manual is being provided only to authorized professors and instructors for use in preparing for the classes using the affiliated textbook. No other use or distribution of this Manual is permitted. This Manual may not be sold and may not be distributed to or used by any student or other third party. No part of this Manual may be reproduced, displayed or distributed in any form or by any means, electronic or otherwise, without the prior written permission of the McGraw-Hill.**

Chapter 9

INTERPOLATION FUNCTIONS, NUMERICAL INTEGRATION, AND MODELING CONSIDERATIONS

Problem 9.1: Show that the interpolation functions for the three-node equilateral triangular element given in Fig. P9.1 are

$$\psi_1 = \frac{1}{2}\left(1 - \xi - \frac{1}{\sqrt{3}}\eta\right), \quad \psi_2 = \frac{1}{2}\left(1 + \xi - \frac{1}{\sqrt{3}}\eta\right), \quad \psi_3 = \frac{1}{\sqrt{3}}\eta$$

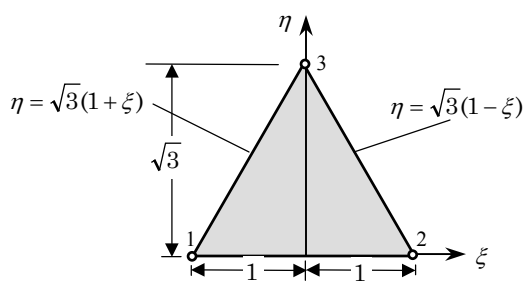

Figure P9.1

Solution: Since ψ_1 must vanish on line connecting nodes 2 and 3, it must be of the form

$$\psi_1(\xi, \eta) = c_1\left[\eta - \sqrt{3}\,(1 - \xi)\right]$$

Since $\psi_1(-1, 0) = 1$, we obtain $c_1 = -1/2\sqrt{3}$. Thus, we have

$$\psi_1(\xi, \eta) = c_1\left[\eta - \sqrt{3}\,(1 - \xi)\right] = \frac{1}{2}\left(1 - \xi - \frac{1}{\sqrt{3}}\eta\right)$$

Similarly, ψ_2 should be of the form $\psi_2(\xi, \eta) = c_2\left[\eta - \sqrt{3}\,(1 + \xi)\right]$ and it should be equal to unity at node 2, giving $c_2 = -1/2\sqrt{3}$. Hence, we have

$$\psi_2(\xi, \eta) = c_2\left[\eta - \sqrt{3}\,(1 + \xi)\right] = \frac{1}{2}\left(1 + \xi - \frac{1}{\sqrt{3}}\eta\right)$$

Finally, we know that ψ_3 must vanish on line $\eta = 0$. Hence, it is of the form

$$\psi_3(\xi, \eta) = c_3\eta \quad \rightarrow \quad \psi_3(\xi, \eta) = \frac{\eta}{\sqrt{3}}$$

PROPRIETARY MATERIAL. ©The McGraw-Hill Companies, Inc. All rights reserved.

Problem 9.2: Show that the interpolation functions that involve the term $\xi^2 + \eta^2$ for the five-node rectangular element shown in Fig. P9.2 are given by

$$\begin{aligned}
\psi_1 &= 0.25(-\xi - \eta + \xi\eta) + 0.125(\xi^2 + \eta^2) \\
\psi_2 &= 0.25(\xi - \eta - \xi\eta) + 0.125(\xi^2 + \eta^2) \\
\psi_3 &= 0.25(\xi + \eta + \xi\eta) + 0.125(\xi^2 + \eta^2) \\
\psi_4 &= 0.25(-\xi + \eta - \xi\eta) + 0.125(\xi^2 + \eta^2) \\
\psi_5 &= 1 - 0.5(\xi^2 + \eta^2)
\end{aligned}$$

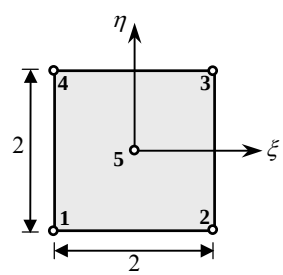

Figure P9.2

Solution: The interpolation functions are of the form

$$\psi_i(\xi, \eta) = a_i + b_i\xi + c_i\eta + d_i\xi\eta + e_i(\xi^2 + \eta^2)$$

For example, using the interpolation property of ψ_1, we obtain five sets of algebraic relations, which can be expressed in matrix form as

$$\begin{bmatrix} 1 & 0 & 0 & 0 & 0 \\ 1 & -1 & -1 & 1 & 2 \\ 1 & 1 & -1 & -1 & 2 \\ 1 & 1 & 1 & 1 & 2 \\ 1 & -1 & 1 & -1 & 2 \end{bmatrix} \begin{Bmatrix} a_1 \\ b_1 \\ c_1 \\ d_1 \\ e_1 \end{Bmatrix} = \begin{Bmatrix} 0 \\ 1 \\ 0 \\ 0 \\ 0 \end{Bmatrix}$$

The determinant of this matrix is 32. Using Cramer's rule, we can solve the matrix equations for the constants: $a_1 = 0, b_1 = -8/32 = -0.25, c_1 = -0.25, d_1 = 0.25$, and $e_1 = 0.125$. Thus we have

$$\psi_1(\xi, \eta) = 0.25(-\xi - \eta + \xi\eta) + 0.125(\xi^2 + \eta^2)$$

Similarly, the other functions can be determined.

Problem 9.3: Calculate the interpolation functions $\psi_i(x, y)$ for the quadratic triangular element shown in Fig. P9.3. *Hint:* Use Eq. (9.2.16), where L_i are given by Eq. (8.2.25).

PROPRIETARY MATERIAL. ©The McGraw-Hill Companies, Inc. All rights reserved.

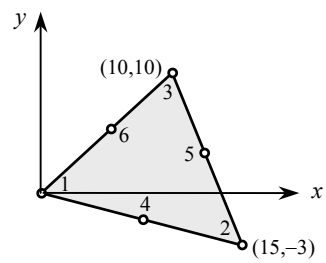

Figure P9.3

Solution: Using the procedure described in Example 9.2.1, we obtain

$$\psi_1 = L_1(2L_1 - 1),\ \psi_2 = L_2(2L_2 - 1),\ \psi_3 = L_3(2L_3 - 1)$$

$$\psi_4 = 4L_1L_2,\ \psi_5 = 4L_2L_3,\ \psi_6 = 4L_1L_3$$

where L_i $(i = 1, 2, 3)$ are the linear interpolation functions ψ_i of Eq. (8.2.25). The coefficients α_i, β_i and γ_i for the element shown are

$$\alpha_1 = 150 - (-30) = 180,\ \alpha_2 = 0,\ \alpha_3 = 0,\ \beta_1 = -13,\ \beta_2 = 10$$

$$\beta_3 = 3,\ \gamma_1 = -5,\ \gamma_2 = -10,\ \gamma_3 = 15$$

The interpolation functions become $(2A = \alpha_1 + \alpha_2 + \alpha_3)$

$$L_1 = \frac{1}{180}(180 - 13x - 5y), \quad L_2 = \frac{1}{180}(10x - 10y), \quad L_3 = \frac{1}{180}(3x + 15y)$$

Hence, the quadratic function ψ_1 for node 1 of the given element is

$$\psi_1(x, y) = L_1(2L_1 - 1) = \frac{1}{180 \times 90}(180 - 13x - 5y)(90 - 13x - 5y)$$

Similarly, we obtain

$$\begin{aligned}
\psi_2(x, y) &= L_2(2L_2 - 1) = \frac{1}{162}(x - y)(-9 + x - y) \\
\psi_3(x, y) &= L_3(2L_3 - 1) = \frac{1}{1800}(x + 5y)(-30 + x + 5y) \\
\psi_4(x, y) &= 4L_1L_2 = \frac{1}{810}(180 - 13x - 5y)(x - y) \\
\psi_5(x, y) &= 4L_2L_3 = \frac{1}{1080}(x - y)(x + 5y) \\
\psi_6(x, y) &= 4L_3L_1 = \frac{1}{10800}(180 - 13x - 5y)(x + 5y)
\end{aligned}$$

PROPRIETARY MATERIAL. ©The McGraw-Hill Companies, Inc. All rights reserved.

Problem 9.4: Determine the interpolation function ψ_{14} in terms of the area coordinates, L_i for the quartic triangular element shown in Fig. P9.4.

Solution: Using Eq. (9.2.14), we obtain the 4th degree polynomial ($k = 5$ and $n = 15$). First, note that ψ_{14} must vanish along lines $L_1 = 0$, $L_2 = 0$ and $L_3 = 0$. It must also vanish on line $L_2 = 1/4$. Thus

$$\psi_{14} = \frac{L_1 - 0}{\frac{1}{4} - 0}\frac{L_2 - 0}{\frac{2}{4} - 0}\frac{L_3 - 0}{\frac{1}{4} - 0}\frac{L_2 - \frac{1}{4}}{\frac{2}{4} - \frac{1}{4}} = 32L_1L_2L_3(4L_2 - 1)$$

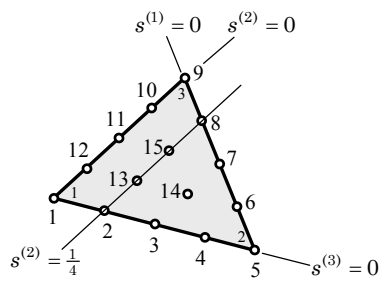

Figure P9.4

Problem 9.5: Derive the interpolation function of a corner node in a cubic serendipity element.

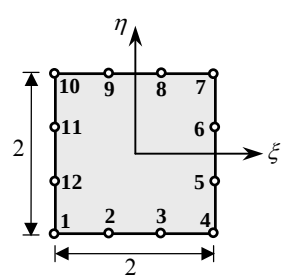

Figure P9.5

Solution: First we note that the polynomials used for rectangular serendipity elements should not contain terms under the cone of Figure 9.2.5. For the element under consideration, the polynomial form is given in Eq. (9.2.32). Now consider node 1 of Figure 9.2.8. The function ψ_1 must vanish on lines $\xi = 1$ and $\eta = 1$. In addition, it should vanish at nodes 2, 3, 5 and 7. For any corner node, the interpolation function is of the form

$$\psi_i(\xi, \eta) = (1 + \xi_i\xi)(1 + \eta_i\eta)(a_i + b_i\xi^2 + c_i\eta^2), \quad i = 1, 2, 9 \text{ or } 12$$

PROPRIETARY MATERIAL. ©The McGraw-Hill Companies, Inc. All rights reserved.

where (ξ_i, η_i) denote the local coordinates of the corner nodes. For node 1, we have $\xi_1 = -1$ and $\eta_1 = -1$, and ψ_1 has the form

$$\psi_1(\xi, \eta) = (1 - \xi)(1 - \eta)(a_1 + b_1\xi^2 + c_1\eta^2)$$

We must determine the constants a_1, b_1, and c_1 using the conditions,

$$\psi_1(-1, -1) = 1, \quad \psi_1(-\frac{1}{3}, -1) = 0, \quad \psi_1(-1, -\frac{1}{3}) = 0$$

These conditions give the relations

$$a_1 + b_1 + c_1 = \frac{1}{4}, \; a_1 + \frac{b_1}{9} + c_1 = 0, \; a_1 + b_1 + \frac{c_1}{9} = 0$$

whose solution is: $a_1 = -10/32, b_1 = c_1 = 9/32$, and the interpolation function ψ_1 becomes

$$\psi_1(\xi, \eta) = \frac{1}{32}(1 - \xi)(1 - \eta)[-10 + 9(\xi^2 + \eta^2)]$$

For a node intermediate to the corner nodes, the interpolation functions take a different form. For nodes 2 and 3, for example, ψ must vanish at $\xi = -1$, $\xi = 1$ and $\eta = 1$:

$$\psi_i(\xi, \eta) = (1 - \xi^2)(1 - \eta)(a_i + b_i\xi), \quad i = 2 \text{ or } 3$$

and for nodes 5 and 7, ψ must vanish at $\xi = 1$, $\eta = -1$ and $\eta = 1$.

$$\psi_i(\xi, \eta) = (1 - \xi)(1 - \eta^2)(a_i + b_i\eta), \quad i = 5 \text{ or } 7$$

The constants a_i and b_i are to be determined using the interpolation property. As an example, consider node 2. We have

$$\psi_2(\xi, \eta) = (1 - \xi^2)(1 - \eta)(a_2 + b_2\xi)$$

The a_2 and b_2 are to be determined from the conditions,

$$\psi_2(-\frac{1}{3}, -1) = 1, \quad \psi_2(\frac{1}{3}, -1) = 0$$

which give $a_2 = -b_2/3 = 9/32$. Hence,

$$\psi_2(\xi, \eta) = \frac{9}{32}(1 - \xi^2)(1 - \eta)(1 - 3\xi)$$

Problem 9.6: Consider the five-node element shown in Fig. P9.6. Using the basic linear and quadratic interpolations along the coordinate directions ξ and η, derive

PROPRIETARY MATERIAL. ©The McGraw-Hill Companies, Inc. All rights reserved.

the interpolation functions for the element. Note that the element can be used as a transition element connecting four-node elements to eight- or nine-node elements.

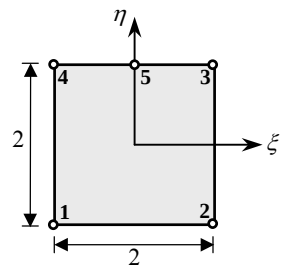

Figure P9.6

Solution: First, we construct the interpolation function associated with node 5. It should vanish at $\xi = 1$, $\xi = -1$, and $\eta = -1$. Hence, it should be of the form

$$\psi_5(\xi, \eta) = c_5(1 - \xi)(1 + \xi)(1 + \eta)$$

The constant c_5 is determined from the condition $\psi_5(0, 1) = 1$. We have $c_5 = 1/2$.

$$\psi_5(\xi, \eta) = \frac{1}{2}(1 - \xi^2)(1 + \eta)$$

For any corner node of the bilinear element, the interpolation function is of the form

$$\hat{\psi}_i(\xi, \eta) = (1 + \xi_i\xi)(1 + \eta_i\eta)$$

where (ξ_i, η_i) denote the local coordinates of the corner nodes:

$$(\xi_1, \eta_1) = (-1, -1),\ (\xi_2, \eta_2) = (1, -1),\ (\xi_3, \eta_3) = (1, 1),\ (\xi_4, \eta_4) = (-1, 1)$$

These should be corrected to vanish at node 5: $(\xi_5, \eta_5) = (0, 1)$. The bilinear functions $\hat{\psi}_1$ and $\hat{\psi}_2$ already satisfy this property [*i.e.*, vanish at point (0,1)]. Thus, $\psi_1 = \hat{\psi}_1, \psi_2 = \hat{\psi}_2$, and we need to correct only $\hat{\psi}_3$ and $\hat{\psi}_4$ so that they vanish at the point (0,1). These functions take a value of 0.5 at node 5, while ψ_5 takes a value of unity. Therefore, $0.5 \times \psi_5$ should be subtracted from $\hat{\psi}_3$ and $\hat{\psi}_4$ to obtain the required functions. The final result is

$$\psi_1 = \frac{1}{4}(1 - \eta)(1 - \xi),\ \psi_2 = \frac{1}{4}(1 + \xi)(1 - \eta)$$

$$\psi_3 = \frac{1}{4}(1 + \xi)(1 + \eta)\xi,\ \psi_4 = -\frac{1}{4}(1 - \xi)(1 + \eta)\xi,\ \psi_5 = \frac{1}{2}(1 - \xi^2)(1 + \eta)$$

PROPRIETARY MATERIAL. ©The McGraw-Hill Companies, Inc. All rights reserved.

Problem 9.7: (*Nodeless variables*) Consider the four-node rectangular element with interpolation of the form

$$u \sum_{i-1}^{4} u_i \psi_i + \sum_{i=1}^{4} c_i \phi_i$$

where u_i are the nodal values and c_i are arbitrary constants. Determine the form of ψ_i and ϕ_i for the element.

Solution: Since u_i is the value of u at the $i-$th node of the element, the second part should be identically zero at the nodes. This implies, for non–zero values of the parameters $(c_1, c_2, c_3, c_4$, that $(\phi_1, \phi_2, \phi_3, \phi_4)$ should take the value of zero at the $i-$th node, and be linearly independent. Thus, ψ_i, $(i = 1, 2, 3, 4)$ are the linear interpolation functions of the four–node rectangular element, and ϕ_i are the lowest order polynomials that satisfy the requirement, $\phi_i(\xi_j, \eta_j) = 0$ for any i and j. The following functions satisfy the requirement

$$\phi_1 = (1 - \xi^2),\ \phi_2 = (1 - \eta^2),\ \phi_3 = (1 - \xi^2)\eta,\ \phi_4 = \xi(1 - \eta^2)$$

Problems 9.8–9.10: Determine the Jacobian matrix and the transformation equations for the elements given in Fig. P9.8–P9.10.

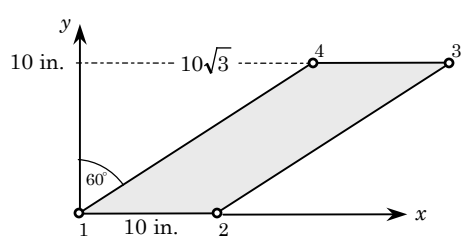

Figure P9.8

Solution to Problem 9.8: The transformation equations are

$$x = \sum_{i=1}^{4} x_i \psi_i = 13.66 + 5\xi + 8.66\eta, \quad y = \sum_{i=1}^{4} y_i \psi_i = 5(1 + \eta)$$

The Jacobian matrix can be computed using the definition or using Eq. (9.3.11b):

$$[J] = \begin{bmatrix} \frac{\partial x}{\partial \xi} & \frac{\partial y}{\partial \xi} \\ \frac{\partial x}{\partial \eta} & \frac{\partial y}{\partial \eta} \end{bmatrix} = \begin{bmatrix} \frac{\partial \hat{\psi}_1}{\partial \xi} & \frac{\partial \hat{\psi}_2}{\partial \xi} & \frac{\partial \hat{\psi}_3}{\partial \xi} & \frac{\partial \hat{\psi}_4}{\partial \xi} \\ \frac{\partial \hat{\psi}_1}{\partial \eta} & \frac{\partial \hat{\psi}_2}{\partial \eta} & \frac{\partial \hat{\psi}_3}{\partial \eta} & \frac{\partial \hat{\psi}_4}{\partial \eta} \end{bmatrix} \begin{bmatrix} x_1 & y_1 \\ x_2 & y_2 \\ x_3 & y_3 \\ x_4 & y_4 \end{bmatrix}$$

PROPRIETARY MATERIAL. ©The McGraw-Hill Companies, Inc. All rights reserved.

$$= \frac{1}{4}\begin{bmatrix} -(1-\eta) & (1-\eta) & (1+\eta) & -(1+\eta) \\ -(1-\xi) & -(1+\xi) & (1+\xi) & (1-\xi) \end{bmatrix} \begin{bmatrix} 0.0 & 0.0 \\ 10.0 & 0.0 \\ 27.32 & 10.0 \\ 17.32 & 10.0 \end{bmatrix}$$

$$= \begin{bmatrix} 5.0 & 0.0 \\ 8.66 & 5.0 \end{bmatrix}$$

Thus, the Jacobian is a positive number, $J = 25$.

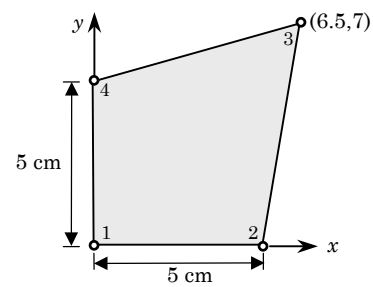

Figure P9.9

Solution to Problem 9.9: The coordinates of the element nodes are:

$$\begin{bmatrix} 0.0 & 0.0 \\ 5.0 & 0.0 \\ 6.5 & 7.0 \\ 0.0 & 5.0 \end{bmatrix}$$

The transformation equations are

$$x = \sum_{i=1}^{4} x_i\psi_i = \frac{1}{4}(1+\xi)(11.5+1.5\eta), \quad y = \sum_{i=1}^{4} y_i\psi_i = \frac{1}{4}(1+\eta)(12+2\xi)$$

The Jacobian matrix is given by

$$[J] = \begin{bmatrix} \frac{\partial x}{\partial \xi} & \frac{\partial y}{\partial \xi} \\ \frac{\partial x}{\partial \eta} & \frac{\partial y}{\partial \eta} \end{bmatrix} = \begin{bmatrix} 2.875+0.375\eta & 0.5+0.5\eta \\ 0.375+0.375\xi & 3.0+0.5\xi \end{bmatrix}$$

The Jacobian is

$$J = \frac{1}{8}(67.5+7.5\eta+10\xi)$$

which is positive for any (ξ, η) such that $-1 \le \xi \le 1$ and $-1 \le \eta \le 1$.

PROPRIETARY MATERIAL. ©The McGraw-Hill Companies, Inc. All rights reserved.

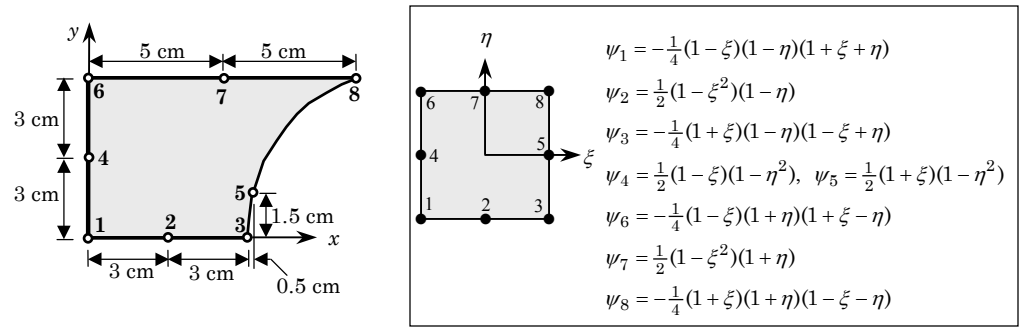

Figure P9.10

Solution to Problem 9.10: Note that the node numbering used in Figure P9.10 is the same as that used for the (master) element in Figure 9.2.8. The matrix of nodal coordinates is given by

$$\begin{bmatrix} 0.0 & 0.0 \\ 3.0 & 0.0 \\ 6.0 & 0.0 \\ 0.0 & 3.0 \\ 6.5 & 1.5 \\ 0.0 & 6.0 \\ 5.0 & 6.0 \\ 10.0 & 6.0 \end{bmatrix}$$

The transformation equations are

$$x = \sum_{i=1}^{8} x_i \hat{\psi}_i(\xi,\eta) = 3.25 + 3.25\xi + \eta + \xi\eta + 0.75\eta^2 + 0.75\xi\eta^2$$
$$y = \sum_{i=1}^{8} y_i \hat{\psi}_i(\xi,\eta) = 2.25 - 0.75\xi + 3\eta + 0.75\eta^2 + 0.75\xi\eta^2$$

The Jacobian matrix becomes

$$[J] = \begin{bmatrix} \frac{\partial x}{\partial \xi} & \frac{\partial y}{\partial \xi} \\ \frac{\partial x}{\partial \eta} & \frac{\partial y}{\partial \eta} \end{bmatrix} = \begin{bmatrix} 3.25 + \eta + 0.75\eta^2 & -0.75 + 0.75\eta^2 \\ (1+1.5\eta)(1+\xi) & 3.0 + 1.5\eta(1+\xi) \end{bmatrix}$$

The Jacobian is

$$J = 10.5 + 0.75\xi + 9\eta + 6\xi\eta + 3\eta^2 + 0.75\xi\eta^2$$

A plot of the Jacobian shows that $J = 0$ at $\xi = 1$ and $\eta = -1$ and $J > 0$ everywhere else.

PROPRIETARY MATERIAL. ©The McGraw-Hill Companies, Inc. All rights reserved.

Problem 9.11: Using the Gauss quadrature, determine the contribution of a constant distributed source to nodal points of the four-node finite element in Fig. P9.9.

Solution: The integral to be evaluated is

$$f_i^e = \int_{\Omega^e} f_0 \psi_i^e(x,y)\ dxdy = \int_{-1}^{1}\int_{-1}^{1} f_0 \psi^e(\xi,\eta) J\ d\xi d\eta$$

Note that the integrand is quadratic in ξ and η. Hence, a 2×2 Gauss rule would evaluate the integrand exactly. For example, we have (see Problem 9.9 for the Jacobian)

$$\begin{aligned}
f_1^e &= \int_{-1}^{1}\int_{-1}^{1} f_0 \frac{1}{4}(1-\xi)(1-\eta)\frac{1}{8}(67.5+7.5\eta+10\xi)\ d\xi d\eta \\
&= \frac{f_0}{32}\int_{-1}^{1}(1-\eta)\Big[(1-\frac{1}{\sqrt{3}})(67.5+7.5\eta+\frac{10}{\sqrt{3}}) \\
&\quad + (1+\frac{1}{\sqrt{3}})(67.5+7.5\eta-\frac{10}{\sqrt{3}})\Big]\ d\eta \\
&= \frac{f_0}{16}\int_{-1}^{1}(1-\eta)(67.5+7.5\eta-\frac{10}{3})\ d\eta \\
&= \frac{f_0}{16}\Big[(1-\frac{1}{\sqrt{3}})(67.5+\frac{7.5}{\sqrt{3}}-\frac{10}{3})+(1+\frac{1}{\sqrt{3}})(67.5-\frac{7.5}{\sqrt{3}}-\frac{10}{3})\Big] \\
&= \frac{f_0}{8}(67.5-\frac{7.5}{3}-\frac{10}{3}) \\
&= \frac{185}{24}f_0 = 7.70833 f_0
\end{aligned}$$

Similarly, the remaining three components can be computed:

$$f_1^e = 7.7083 f_0, \quad f_2^e = 8.5417 f_0, \quad f_3^e = 9.1667 f_0, \quad f_4^e = 8.3333 f_0$$

Problem 9.12: For a 12-node serendipity (cubic) element, as illustrated in Fig. P9.12, show that the Jacobian $J = J_{11}$ is

$$\begin{aligned}
J = {} & 0.4375 + 0.84375(b-a) + 0.5625\eta - 0.84375(b-a)\eta \\
& + 1.125\xi - 0.5625(a+b)\xi - 1.125\eta\xi + 0.5625(a+b)\eta\xi \\
& + 1.6875\xi^2 - 2.53125(b-a)\xi^2 - 1.6875\eta\xi^2 + 2.53125(b-a)\eta\xi^2
\end{aligned}$$

What can you conclude from the requirement $J > 0$?

PROPRIETARY MATERIAL. ©The McGraw-Hill Companies, Inc. All rights reserved.

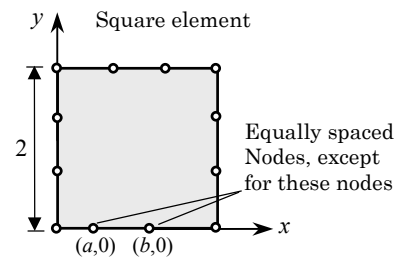

Figure P9.12

Solution: We have (after a lengthy algebra using *Maple*)

$$
\begin{aligned}
x &= 0.4375 + 0.28125(a+b) + 0.4375\xi + 0.5625\eta + 0.84375(b-a)\xi \\
&\quad - 0.28125(a+b)\eta + 0.5625\xi\eta + 0.84375(a-b)\xi\eta \\
&\quad + 0.5625\xi^2 - 0.28125(a+b)\xi^2 - 0.5625\eta\xi^2 + 0.28125(a+b)\eta\xi^2 \\
&\quad + 0.5625\xi^3 + 0.84375(a-b)\xi^3 - 0.5625\eta\xi^3 + 0.84375(b-a)\eta\xi^3 \\
y &= 1 + \eta
\end{aligned}
$$

Hence, the Jacobian is $J = J_{11}$ because $J_{12} = 0$ and $J_{22} = 1$

$$
\begin{aligned}
J = J_{11} &= 0.4375 + 0.84375(b-a) + 0.5625\eta - 0.84375(b-a)\eta \\
&\quad + 1.125\xi - 0.5625(a+b)\xi - 1.125\eta\xi + 0.5625(a+b)\eta\xi \\
&\quad + 1.6875\xi^2 - 2.53125(b-a)\xi^2 - 1.6875\eta\xi^2 + 2.53125(b-a)\eta\xi^2
\end{aligned}
$$

Note that

$$
\begin{aligned}
J(\xi, \eta = -1) &= -0.125 + 1.6875(b-a) + 2.25\xi - 1.125(a+b)\xi \\
&\quad + 3.375\xi^2 - 5.0625(b-a)\xi^2 \\
J(\xi, \eta = +1) &= 1.0
\end{aligned}
$$

Thus $J = J_{11} > 0$ ensures a unique transformation and preservation of the sense of the coordinate system in the master rectangular element, provided a and b are such that

$$
5.5 - 1.125(a+b) - 3.375(b-a) > 0 \quad \text{and} \quad 1.0 + 1.125(a+b) - 3.375(b-a) > 0
$$

The above inequalities place a restriction on the values of a and b. Clearly, for $a > 0.666667$ and $b = 1.333333$ (the usual location of the midside nodes), the inequalities are met (i.e., $J = 1 > 0$). A plot of the Jacobian shows, for example, that $J = 0$ when (i) $a = 0.27777 = 5/18$ and (ii) $b = 1$ and $J < 0$ for $a = 0.27777$ and any $b < 0.4745$.

PROPRIETARY MATERIAL. ©The McGraw-Hill Companies, Inc. All rights reserved.

Problem 9.13: Determine Jacobian of the eight-node rectangular element of Fig. P9.13 in terms of the parameter a.

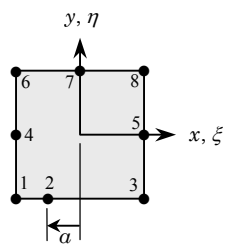

$$\psi_1 = -\tfrac{1}{4}(1-\xi)(1-\eta)(1+\xi+\eta)$$
$$\psi_2 = \tfrac{1}{2}(1-\xi^2)(1-\eta)$$
$$\psi_3 = -\tfrac{1}{4}(1+\xi)(1-\eta)(1-\xi+\eta)$$
$$\psi_4 = \tfrac{1}{2}(1-\xi)(1-\eta^2), \quad \psi_5 = \tfrac{1}{2}(1+\xi)(1-\eta^2)$$
$$\psi_6 = -\tfrac{1}{4}(1-\xi)(1+\eta)(1+\xi-\eta)$$
$$\psi_7 = \tfrac{1}{2}(1-\xi^2)(1+\eta)$$
$$\psi_8 = -\tfrac{1}{4}(1+\xi)(1+\eta)(1-\xi-\eta)$$

Figure P9.13

Solution: Using the coordinate system (x, y), which coincides with the natural coordinate system (ξ, η), we obtain

$$x = \xi - \frac{a}{2}(1-\xi^2)(1-\eta), \quad y = \eta$$

The Jacobian is given by $J = J_{11}$ ($J_{12} = 0$ and $J_{22} = 1$)

$$J = 1.0 + a(1-\eta)\xi$$

which is zero at (i) $(\xi, \eta) = (-1, -1)$ when $a = 0.5$ (left quarter point) and (ii) $(\xi, \eta) = (1, -1)$ when $a = -0.5$ (right quarter point). The Jacobian is negative when the node is placed inside a quarter point and the nearest corner node.

Problem 9.14: Determine the conditions on the location of node 3 of the quadrilateral element shown in Fig. P9.14. Show that the transformation equations are given by

$$x = \frac{1}{4}(1+\xi)\left[2(1-\eta) + a(1+\eta)\right]$$
$$y = \frac{1}{4}(1+\eta)\left[2(1-\xi) + b(1+\xi)\right]$$

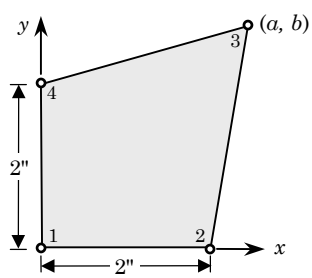

Figure P9.14

PROPRIETARY MATERIAL. © The McGraw-Hill Companies, Inc. All rights reserved.

Solution: The transformation equations are

$$x = \sum_{i=1}^{4} x_i \psi_i = \frac{1}{4}(1+\xi)\left[2(1-\eta) + a(1+\eta)\right]$$
$$y = \sum_{i=1}^{4} y_i \psi_i = \frac{1}{4}(1+\eta)\left[2(1-\xi) + b(1+\xi)\right]$$

The Jacobian matrix is

$$[J] = \frac{1}{4}\begin{bmatrix} -(1-\eta) & (1-\eta) & (1+\eta) & -(1+\eta) \\ -(1-\xi) & -(1+\xi) & (1+\xi) & (1-\xi) \end{bmatrix}\begin{bmatrix} 0 & 0 \\ 2 & 0 \\ a & b \\ 0 & 2 \end{bmatrix}$$
$$= \frac{1}{4}\begin{bmatrix} 2(1-\eta) + a(1+\eta) & (b-2)(1+\eta) \\ (a-2)(1+\xi) & 2(1-\xi) + b(1+\xi) \end{bmatrix}$$

The Jacobian is given by

$$J = \frac{1}{4}\left[a(1+\eta) + b(1+\xi) - 2(\xi+\eta)\right]$$

For positive Jacobian at the point (ξ, η)=(1,1), it follows that $a+b > 2$. In particular, $J = 0$ when $a = 0.5$, $b = 1.5$ and $\xi = \eta = 1.0$.

Problem 9.15: Determine the global derivatives of the interpolation functions for node 3 of the element shown in Fig. P9.9.

Solution: The inverse of the Jacobian matrix is given by

$$J^{-1} = \frac{1}{J}\begin{bmatrix} 3 + 0.5\xi & -0.5(1+\eta) \\ -0.375(1+\xi) & 2.875 + 0.375\eta \end{bmatrix}$$

Hence, the global derivatives of the interpolation functions for node 3 of the element in Figure P9.9 are

$$\frac{\partial \hat{\psi}_3}{\partial x} = \frac{5(1+\eta)}{8J}, \quad \frac{\partial \hat{\psi}_3}{\partial y} = \frac{5(1+\xi)}{8J}$$

where $J = (135 + 15\eta + 20\xi)/16$.

Problem 9.16: Let the transformation between the global coordinates (x, y) and local normalized coordinates (ξ, η) in a Lagrange element Ω_e be

$$x = \sum_{i=1}^{m} x_i \hat{\psi}_i(\xi, \eta), \qquad y = \sum_{i=1}^{m} y_i \hat{\psi}_i(\xi, \eta)$$

PROPRIETARY MATERIAL. ©The McGraw-Hill Companies, Inc. All rights reserved.

where (x_i^e, y_i^e) denote the global coordinates of the element nodes. The differential lengths in the two coordinates are related by

$$dx_e = \frac{\partial x_e}{\partial \xi} d\xi + \frac{\partial x_e}{\partial \eta} \partial \eta, \qquad dy_e = \frac{\partial y_e}{\partial \xi} \xi + \frac{\partial y_e}{\partial \eta} d\eta$$

or

$$\left\{ \begin{array}{c} dx_e \\ dy_e \end{array} \right\} = \left[\begin{array}{cc} \frac{\partial x_e}{\partial \xi} & \frac{\partial x_e}{\partial \eta} \\ \frac{\partial y_e}{\partial \xi} & \frac{\partial y_e}{\partial \eta} \end{array} \right] \left\{ \begin{array}{c} d\xi \\ d\eta \end{array} \right\} = [J] \left\{ \begin{array}{c} d\xi \\ d\eta \end{array} \right\}$$

In the finite element literature the transpose of $[\mathcal{T}]$ is called the Jacobian matrix, $[J]$. Show that the derivatives of the interpolation function $\psi_i^e(\xi, \eta)$ with respect to the global coordinates (x, y) are related to their derivatives with respect to the local coordinates (ξ, η) by

$$\left\{ \begin{array}{c} \frac{\partial \psi_i^e}{\partial x} \\ \frac{\partial \psi_i^e}{\partial y} \end{array} \right\} = [J]^{-1} \left\{ \begin{array}{c} \frac{\partial \psi_i^e}{\partial \xi} \\ \frac{\partial \psi_i^e}{\partial \eta} \end{array} \right\}$$

$$\left\{ \begin{array}{c} \frac{\partial^2 \psi_i^e}{\partial x^2} \\ \frac{\partial^2 \psi_i^e}{\partial y^2} \\ \frac{\partial^2 \psi_i^e}{\partial x \partial y} \end{array} \right\} = \left[\begin{array}{ccc} \left(\frac{\partial x_e}{\partial \xi}\right)^2 & \left(\frac{\partial y_e}{\partial \xi}\right)^2 & 2\frac{\partial x_e}{\partial \xi}\frac{\partial y_e}{\partial \xi} \\ \left(\frac{\partial x_e}{\partial \eta}\right)^2 & \left(\frac{\partial y_e}{\partial \eta}\right)^2 & 2\frac{\partial x_e}{\partial \eta}\frac{\partial y_e}{\partial \eta} \\ \frac{\partial x_e}{\partial \xi}\frac{\partial x_e}{\partial \eta} & \frac{\partial y_e}{\partial \xi}\frac{\partial y_e}{\partial \eta} & \frac{\partial x_e}{\partial \eta}\frac{\partial y_e}{\partial \xi} + \frac{\partial x_e}{\partial \xi}\frac{\partial y_e}{\partial \eta} \end{array} \right]^{-1}$$
$$\times \left(\left\{ \begin{array}{c} \frac{\partial^2 \psi_i^e}{\partial \xi^2} \\ \frac{\partial^2 \psi_i^e}{\partial \eta^2} \\ \frac{\partial^2 \psi_i^e}{\partial \xi \partial \eta} \end{array} \right\} - \left[\begin{array}{cc} \frac{\partial^2 x_e}{\partial \xi^2} & \frac{\partial^2 y_e}{\partial \xi^2} \\ \frac{\partial^2 x_e}{\partial \eta^2} & \frac{\partial^2 y_e}{\partial \eta^2} \\ \frac{\partial^2 x_e}{\partial \xi\, \partial \eta} & \frac{\partial^2 y_e}{\partial \xi \partial \eta} \end{array} \right] \left\{ \begin{array}{c} \frac{\partial \psi_i^e}{\partial x} \\ \frac{\partial \psi_i^e}{\partial y} \end{array} \right\} \right)$$

Problem 9.17: (*Continuation of Problem 9.16*) Show that the Jacobian can be computed from the equation

$$[J] = \left\{ \begin{array}{cccc} \frac{\partial \psi_1^e}{\partial \xi} & \frac{\partial \psi_2^e}{\partial \xi} & \cdots & \frac{\partial \psi_n^e}{\partial \xi} \\ \frac{\partial \psi_1^e}{\partial \eta} & \frac{\partial \psi_2^e}{\partial \eta} & \cdots & \frac{\partial \psi_n^e}{\partial \eta} \end{array} \right\} \left[\begin{array}{cc} x_1^e & y_1^e \\ x_2^e & y_2^e \\ \vdots & \vdots \\ x_n^e & y_n^e \end{array} \right]$$

Solution of Problems 16 and 17: Part of the Problem 9.16 and all of Problem 9.17 is already discussed in the problem statement. The same procedure as that used for the first derivatives can be used (i.e. chain rule of differentiation) for the second derivatives and arrive at the required result. For example, we have

$$\frac{\partial \psi_i}{\partial \xi} = \frac{\partial \psi_i}{\partial x}\frac{\partial x}{\partial \xi} + \frac{\partial \psi_i}{\partial y}\frac{\partial y}{\partial \xi}, \quad \frac{\partial \psi_i}{\partial \eta} = \frac{\partial \psi_i}{\partial x}\frac{\partial x}{\partial \eta} + \frac{\partial \psi_i}{\partial y}\frac{\partial y}{\partial \eta}$$

PROPRIETARY MATERIAL. ©The McGraw-Hill Companies, Inc. All rights reserved.

and

$$
\begin{aligned}
\frac{\partial^2\psi_i}{\partial\xi^2} &= \frac{\partial}{\partial\xi}\left(\frac{\partial\psi_i}{\partial x}\frac{\partial x}{\partial\xi}+\frac{\partial\psi_i}{\partial y}\frac{\partial y}{\partial\xi}\right)\\
&= \frac{\partial}{\partial\xi}\left(\frac{\partial\psi_i}{\partial x}\right)\frac{\partial x}{\partial\xi}+\frac{\partial\psi_i}{\partial x}\frac{\partial^2 x}{\partial\xi^2}+\frac{\partial}{\partial\xi}\left(\frac{\partial\psi_i}{\partial y}\right)\frac{\partial y}{\partial\xi}+\frac{\partial\psi_i}{\partial y}\frac{\partial^2 y}{\partial\xi^2}\\
&= \frac{\partial^2\psi_i}{\partial x^2}\left(\frac{\partial x}{\partial\xi}\right)^2+\frac{\partial^2\psi_i}{\partial x\partial y}\frac{\partial x}{\partial\xi}\frac{\partial y}{\partial\xi}+\frac{\partial\psi_i}{\partial x}\frac{\partial^2 x}{\partial\xi^2}\\
&+ \frac{\partial^2\psi_i}{\partial y^2}\left(\frac{\partial y}{\partial\xi}\right)^2+\frac{\partial^2\psi_i}{\partial x\partial y}\frac{\partial x}{\partial\xi}\frac{\partial y}{\partial\xi}+\frac{\partial\psi_i}{\partial y}\frac{\partial^2 y}{\partial\xi^2}
\end{aligned}
$$

Similarly, the second derivative with respect to η and the mixed derivative can be evaluated:

$$
\begin{aligned}
\frac{\partial^2\psi_i}{\partial\eta^2} &= \frac{\partial^2\psi_i}{\partial x^2}\left(\frac{\partial x}{\partial\eta}\right)^2+2\frac{\partial^2\psi_i}{\partial x\partial y}\frac{\partial x}{\partial\eta}\frac{\partial y}{\partial\eta}+\frac{\partial\psi_i}{\partial x}\frac{\partial^2 x}{\partial\eta^2}+\frac{\partial\psi_i}{\partial y}\frac{\partial^2 y}{\partial\eta^2}+\frac{\partial^2\psi_i}{\partial y^2}\left(\frac{\partial y}{\partial\eta}\right)^2\\
\frac{\partial^2\psi_i}{\partial\eta\partial\xi} &= \frac{\partial^2\psi_i}{\partial x^2}\frac{\partial x}{\partial\xi}\frac{\partial x}{\partial\eta}+\frac{\partial^2\psi_i}{\partial x\partial y}\left(\frac{\partial x}{\partial\eta}\frac{\partial y}{\partial\xi}+\frac{\partial x}{\partial\xi}\frac{\partial y}{\partial\eta}\right)+\frac{\partial^2\psi_i}{\partial y^2}\frac{\partial y}{\partial\xi}\frac{\partial y}{\partial\eta}\\
&+ \frac{\partial\psi_i}{\partial x}\frac{\partial^2 x}{\partial\eta\partial\xi}+\frac{\partial\psi_i}{\partial y}\frac{\partial^2 y}{\partial\eta\partial\xi}
\end{aligned}
$$

Since we need to write the global derivatives in terms of the local derivatives, set up the equations for the global derivatives from the above three equations. This will yield the required equations.

Problem 9.18: Find the Jacobian matrix for the nine-node quadrilateral element shown in Fig. P9.18. What is the determinant of the Jacobian matrix?

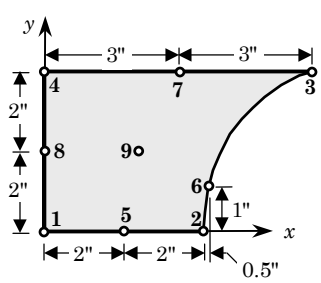

Figure P9.18

Solution: This problem is similar to one in Problem 9.10 (see Figure P9.10), except that it is a nine-node element used here. Once again we note that the node numbering used in Figure P9.14 is different from that used for the master element in Figure 9.6.

PROPRIETARY MATERIAL. ©The McGraw-Hill Companies, Inc. All rights reserved.

The matrix of nodal coordinates is

$$\begin{bmatrix} 0.0 & 0.0 \\ 2.0 & 0.0 \\ 4.0 & 0.0 \\ 0.0 & 2.0 \\ 2.5 & 2.0 \\ 4.5 & 1.0 \\ 0.0 & 4.0 \\ 3.0 & 4.0 \\ 6.0 & 4.0 \end{bmatrix}$$

The transformation equations are

$$x = \sum_{i=1}^{9} x_i \hat{\psi}_i(\xi,\eta) = \frac{1}{4}\left[10 + \xi(9 - \xi - 6\xi\eta) + 2\eta(1 - 2\xi) - 5\xi\eta^2(1+\xi)\right]$$
$$y = \sum_{i=1}^{9} y_i \hat{\psi}_i(\xi,\eta) = \frac{1}{2}(1+\eta)\left[4 - \xi(1+\xi)(1+\eta)\right]$$

The Jacobian matrix becomes

$$[J] = \begin{bmatrix} \frac{\partial x}{\partial \xi} & \frac{\partial y}{\partial \xi} \\ \frac{\partial x}{\partial \eta} & \frac{\partial y}{\partial \eta} \end{bmatrix}$$
$$= \frac{1}{4}\begin{bmatrix} 9 - 4\eta - 2\xi(1+6\eta) - 5\eta^2(1+2\xi) & -2(1+2\xi)(1+\eta)^2 \\ 2(1+\xi)(1-3\xi-5\xi\eta) & 8 - 4\xi(1+\xi)(1+\eta) \end{bmatrix}$$

The Jacobian is

$$J = 4.75 - 3.25\xi - 1.5\eta - 8.5\xi\eta - 3.5\xi^2 - 2.25\eta^2 - 5.25\xi\eta^2 - 5\eta\xi^2$$
$$- \xi^3 - 2\xi^3\eta - 1.5\xi^2\eta^2 - \xi^3\eta^2$$

Problem 9.19: For the eight-node element shown in Fig. P9.19, show that the x-coordinate along the side 1–2 is related to the ξ-coordinate by the relation

$$x = -\tfrac{1}{2}\xi(1-\xi)x_1^e + \tfrac{1}{2}\xi(1+\xi)x_2^e + (1-\xi^2)x_5^e$$

and that the relations

$$\xi = 2\left(\frac{x}{a}\right)^{1/2} - 1, \qquad \frac{\partial x}{\partial \xi} = (xa)^{1/2}$$

PROPRIETARY MATERIAL. ©The McGraw-Hill Companies, Inc. All rights reserved.

hold. Also, show that

$$
\begin{aligned}
u_h(x,0) &= -\left[2\left(\frac{x}{a}\right)^{1/2}-1\right]\left[1-\left(\frac{x}{a}\right)^{1/2}\right]u_1^e \\
&\quad + \left[-1+2\left(\frac{x}{a}\right)^{1/2}\right]\left(\frac{x}{a}\right)^{1/2}u_2^e + 4\left[\left(\frac{x}{a}\right)^{1/2}-\frac{x}{a}\right]u_5^e \\
\left.\frac{\partial u_h}{\partial x}\right|_{(x,0)} &= -\frac{1}{(xa)^{1/2}}\left\{\frac{1}{2}\left[3-4\left(\frac{x}{a}\right)^{1/2}\right]u_1^e + \frac{1}{2}\left[-1+4\left(\frac{x}{a}\right)^{1/2}\right]u_2^e\right. \\
&\quad \left. +2\left[1-2\left(\frac{x}{a}\right)^{1/2}\right]u_5^e\right\}
\end{aligned}
$$

Thus, $\partial u_h/\partial x$ grows at a rate of $(xa)^{-1/2}$ as x approaches zero along the side 1–2. In other words, we have a $x^{-1/2}$ singularity at node 1. Such elements are used to fracture mechanics problems.

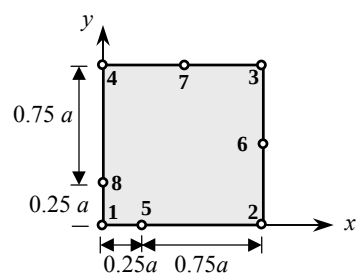

Figure P9.19

Solution: The transformation equation for x is given by

$$
\begin{aligned}
x &= x_1 \cdot \frac{1}{4}(1-\xi)(1-\eta)(-1-\xi-\eta) + x_5 \cdot \frac{1}{2}(1-\xi^2)(1-\eta) \\
&\quad + x_2 \cdot \frac{1}{4}(1+\xi)(1-\eta)(-1+\xi-\eta)|\eta=-1
\end{aligned}
$$

Substituting $x_1 = 0, x_2 = a, x_5 = a/4$, we obtain

$$
x = \frac{a}{4}(1-\xi^2) + \frac{a}{2}\xi(1+\xi)
$$

The roots of the above equation are

$$
(\xi)_1 = 2\sqrt{\frac{x}{a}} - 1, \quad (\xi)_2 = -2\sqrt{\frac{x}{a}} - 1
$$

The second root is not admissible here. Differentiating ξ with respect to x, we obtain $\partial\xi/\partial x = 1/\sqrt{ax}$.

PROPRIETARY MATERIAL. ©The McGraw-Hill Companies, Inc. All rights reserved.

New Problem 9.1: Determine the interpolation functions for the rectangular element shown in Fig. NP9.1. *Hint:* Make use of the one-dimensional interpolation functions and the interpolation properties.

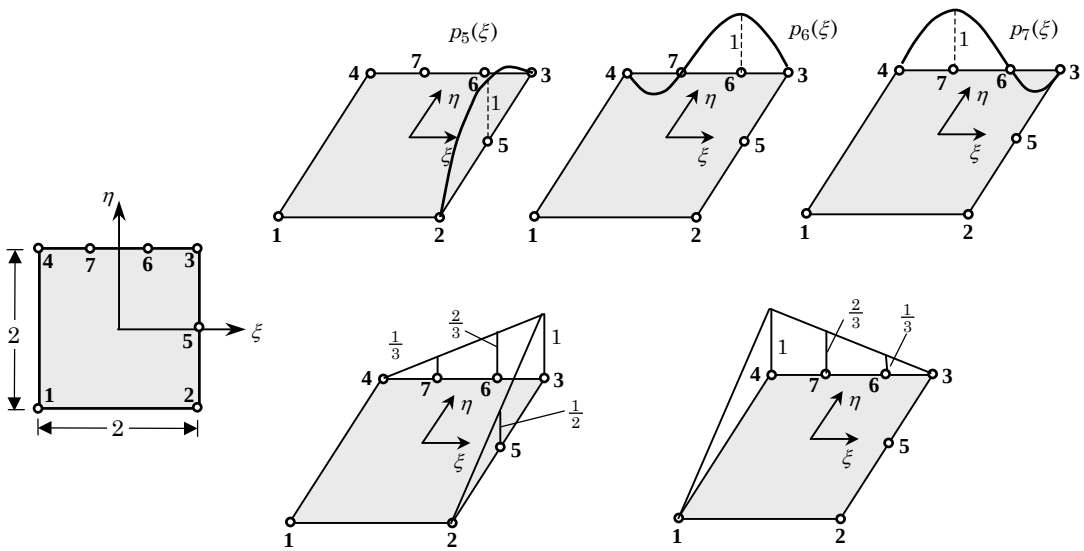

Figure NP.1

Solution: First, note the following interpolation functions associated with nodes 5, 6, and 7:

$$p_5(\eta) = (1-\eta^2), \quad p_6(\xi) = \frac{27}{16}(1-\xi^2)\left(\frac{1}{3}+\xi\right), \quad p_7(\xi) = \frac{27}{16}(1-\xi^2)\left(\frac{1}{3}-\xi\right)$$

Then the interpolation functions associated with nodes 5, 6, and 7 can be written as

$$\psi_5(\xi,\eta) = p_5\left[\frac{1}{2}(1+\xi)\right], \quad \psi_6(\xi,\eta) = p_6(\xi)\left[\frac{1}{2}(1+\eta)\right], \quad \psi_7(\xi,\eta) = p_7(\xi)\left[\frac{1}{2}(1+\eta)\right]$$

The interpolation functions associated with the corner nodes can be constructed as follows:

$$\psi_1(\xi,\eta) = \frac{1}{4}(1+\xi)(1+\eta), \quad \psi_2(\xi,\eta) = \frac{1}{4}(1+\xi)(1-\eta) - \frac{1}{2}\psi_5(\xi,\eta)$$
$$\psi_3(\xi,\eta) = \frac{1}{4}(1-\xi)(1-\eta) - \frac{1}{2}\psi_5(\xi,\eta) - \frac{2}{3}\psi_6(\xi,\eta) - \frac{1}{3}\psi_7(\xi,\eta)$$
$$\psi_4(\xi,\eta) = \frac{1}{4}(1-\xi)(1+\eta) - \frac{1}{3}\psi_6(\xi,\eta) - \frac{2}{3}\psi_7(\xi,\eta)$$

PROPRIETARY MATERIAL. ©The McGraw-Hill Companies, Inc. All rights reserved.

PROPRIETARY AND CONFIDENTIAL

This Manual is the proprietary property of The McGraw-Hill Companies, Inc. ("McGraw-Hill") and protected by copyright and other state and federal laws. By opening and using this Manual the user agrees to the following restrictions, and if the recipient does not agree to these restrictions, the Manual should be promptly returned unopened to McGraw-Hill: **This Manual is being provided only to authorized professors and instructors for use in preparing for the classes using the affiliated textbook. No other use or distribution of this Manual is permitted. This Manual may not be sold and may not be distributed to or used by any student or other third party. No part of this Manual may be reproduced, displayed or distributed in any form or by any means, electronic or otherwise, without the prior written permission of the McGraw-Hill.**

Chapter 10

FLOWS OF VISCOUS INCOMPRESSIBLE FLUIDS

Problem 10.1: Consider Eqs. (10.1) and (10.2) in cylindrical coordinates (r, θ, z). For axisymmetric flows of viscous incompressible fluids (i.e., flow field is independent of θ coordinate), we have

$$\rho\frac{\partial u}{\partial t} = \frac{1}{r}\frac{\partial}{\partial r}(r\sigma_{rr}) - \frac{\sigma_{\theta\theta}}{r} + \frac{\partial \sigma_{rz}}{\partial z} + f_r \tag{i}$$

$$\rho\frac{\partial w}{\partial t} = \frac{1}{r}\frac{\partial}{\partial r}(r\sigma_{rz}) + \frac{\partial \sigma_{zz}}{\partial z} + f_z \tag{ii}$$

$$\frac{1}{r}\frac{\partial}{\partial r}(ru) + \frac{\partial w}{\partial z} = 0 \tag{iii}$$

where

$$\begin{aligned} \sigma_{rr} &= -P + 2\mu\frac{\partial u}{\partial r}, \quad \sigma_{\theta\theta} = -P + 2\mu\frac{u}{r} \\ \sigma_{zz} &= -P + 2\mu\frac{\partial w}{\partial z}, \quad \sigma_{rz} = \mu\left(\frac{\partial u}{\partial z} + \frac{\partial w}{\partial r}\right) \end{aligned} \tag{iv}$$

Develop the semidiscrete finite element model of the equation by the pressure-velocity formulation.

Solution:

Weak Forms The weak forms of the three equations are

$$0 = 2\pi\int_{\Omega^e} w_1\left[\rho\frac{\partial u}{\partial t} - \frac{1}{r}\frac{\partial}{\partial r}(r\sigma_{rr}) + \frac{\sigma_{\theta\theta}}{r} - \frac{\partial \sigma_{rz}}{\partial z} - f_r\right] r dr dz \tag{1a}$$

$$\begin{aligned} &= 2\pi\int_{\Omega^e}\left[\rho w_1\frac{\partial u}{\partial t} + \frac{\partial w_1}{\partial r}\sigma_r + w_1\frac{\sigma_\theta}{r} + \frac{\partial w_1}{\partial z}\sigma_{rz} - w_1 f_r\right] r dr dz \\ &\quad - 2\pi\oint_{\Gamma^e} w_1 t_r r\, ds, \quad t_r = \sigma_r n_r + \sigma_{rz} n_z \end{aligned} \tag{1b}$$

$$0 = 2\pi\int_{\Omega^e} w_2\left[\rho\frac{\partial w}{\partial t} - \frac{1}{r}\frac{\partial}{\partial r}(r\sigma_{rz}) - \frac{\partial \sigma_{zz}}{\partial z} - f_z\right] r dr dz \tag{2a}$$

$$\begin{aligned} &= 2\pi\int_{\Omega^e}\left[\rho w_2\frac{\partial w}{\partial t} + \frac{\partial w_2}{\partial r}\sigma_{rz} + \frac{\partial w_2}{\partial z}\sigma_z - w_2 f_z\right] r dr dz \\ &\quad - 2\pi\oint_{\Gamma^e} w_2 t_z r\, ds, \quad t_z = \sigma_{rz} n_r + \sigma_{zz} n_z \end{aligned} \tag{2b}$$

PROPRIETARY MATERIAL. ©The McGraw-Hill Companies, Inc. All rights reserved.

$$0 = 2\pi \int_{\Omega^e} w_3 \left[-\frac{1}{r}\frac{\partial}{\partial r}(ru) - \frac{\partial w}{\partial z} \right] r dr dz \tag{3a}$$

$$= 2\pi \int_{\Omega^e} \left[-w_3 \frac{\partial}{\partial r}(ru) - r w_3 \frac{\partial w}{\partial z} \right] dr dz \tag{3b}$$

Semi-Discrete Finite Element Model For the interpolation of the form

$$u(r,z) = \sum_{j=1}^{m} u_j \psi_j(r,z), \quad w(r,z) = \sum_{j=1}^{m} w_j \psi_j(r,z), \quad P(r,z) = \sum_{j=1}^{n} P_j \phi_j(r,z) \tag{4}$$

the finite element model is given by

$$\begin{bmatrix} [M^{11}] & [0] & [0] \\ [0] & [M^{22}] & [0] \\ [0] & [0] & [M^{33}] \end{bmatrix} \begin{Bmatrix} \{\ddot{u}\} \\ \{\ddot{v}\} \\ \{\ddot{P}\} \end{Bmatrix} + \begin{bmatrix} [K^{11}] & [K^{12}] & [K^{13}] \\ [K^{12}]^{\mathrm{T}} & [K^{22}] & [K^{23}] \\ [K^{13}]^{\mathrm{T}} & [K^{23}]^{\mathrm{T}} & [K^{33}] \end{bmatrix} \begin{Bmatrix} \{u\} \\ \{v\} \\ \{P\} \end{Bmatrix}$$

$$= \begin{Bmatrix} \{F^1\} \\ \{F^2\} \\ \{F^3\} \end{Bmatrix} \tag{5}$$

$$\begin{aligned}
M_{ij}^{11} &= M_{ij}^{22} = 2\pi \int_{\Omega^e} \rho \psi_i \psi_j \; r dr dz \\
K_{ij}^{11} &= 2\pi \int_{\Omega^e} \mu \left[2\left(\frac{\partial \psi_i}{\partial r}\frac{\partial \psi_j}{\partial r} + \frac{\psi_i}{r}\frac{\psi_j}{r} \right) + \frac{\partial \psi_i}{\partial z}\frac{\partial \psi_j}{\partial z} \right] r dr dz \\
K_{ij}^{12} &= 2\pi \int_{\Omega^e} \mu \frac{\partial \psi_i}{\partial z}\frac{\partial \psi_j}{\partial r} \; r dr dz \\
K_{ij}^{13} &= -2\pi \int_{\Omega^e} \left(r\frac{\partial \psi_i}{\partial r}\phi_j + \psi_i \phi_j \right) dr dz \\
K_{ij}^{22} &= 2\pi \int_{\Omega^e} \mu \left(\frac{\partial \psi_i}{\partial r}\frac{\partial \psi_j}{\partial r} + 2\frac{\partial \psi_i}{\partial z}\frac{\partial \psi_j}{\partial z} \right) r dr dz \\
K_{ij}^{23} &= -2\pi \int_{\Omega^e} \frac{\partial \psi_i}{\partial z}\phi_j \; r dr dz, \quad K_{ij}^{33} = 0, \quad F_i^3 = 0 \\
F_i^1 &= 2\pi \int_{\Omega^e} f_r \psi_i \; r dr dz + 2\pi \oint_{\Gamma^e} \psi_i t_r \; r ds \\
F_i^2 &= 2\pi \int_{\Omega^e} f_z \psi_i \; r dr dz + 2\pi \oint_{\Gamma^e} \psi_i t_z \; r ds
\end{aligned} \tag{5}$$

Fully-Discretized Finite Element Model Equation (5) is of the general form

$$[M]\{\ddot{\Delta}\} + [K]\{\Delta\} = \{F\} \tag{7a}$$

PROPRIETARY MATERIAL. ©The McGraw-Hill Companies, Inc. All rights reserved.

where

$$\{\Delta\} = \left\{ \begin{array}{c} \{u\} \\ \{v\} \\ \{P\} \end{array} \right\} \tag{7b}$$

Then it follows that [see Eqs. (11.32)–(11.33b)]:

$$[\hat{K}]\{\Delta\}_{s+1} = \{\hat{F}\}_{s,s+1} \tag{8}$$

where

$$[\hat{K}] = [M] + a_1[K] \tag{9}$$

$$\{\hat{F}\} = ([M] - a_2[K])\{\Delta\}_s + a_1\{F\}_{s+1} + a_2\{F\}_s$$

$$a_1 = \alpha\Delta t, \quad a_2 = (1-\alpha)\Delta t \tag{10}$$

Problem 10.2: Develop the semidiscrete finite element model of the equations in Problem 10.1 using the penalty function formulation.

Solution: For the finite element model, we begin with the weak forms of the first equation. Adding Eqs. (1b) and (2b)

$$\begin{aligned} 0 =& 2\pi \int_{\Omega^e} \left[\rho w_1 \frac{\partial u}{\partial t} + 2\mu \left(\frac{\partial w_1}{\partial r}\frac{\partial u}{\partial r} + \frac{w_1}{r}\frac{u}{r} \right) + \mu \frac{\partial w_1}{\partial z}\left(\frac{\partial u}{\partial z} + \frac{\partial w}{\partial r} \right) - w_1 f_r \right] r dr dz \\ &+ 2\pi \int_{\Omega^e} \left[\rho w_2 \frac{\partial w}{\partial t} + \frac{\partial w_2}{\partial r}\left(\frac{\partial u}{\partial z} + \mu \frac{\partial w}{\partial r} \right) + 2\mu \frac{\partial w_2}{\partial z}\frac{\partial w}{\partial z} - w_2 f_z \right] r dr dz \\ &- 2\pi \oint_{\Gamma^e} (w_1 t_r + w_2 t_z)\, r ds - \int_{\Omega^e} \left(\frac{\partial w_1}{\partial r} + \frac{w_1}{r} + \frac{\partial w_2}{\partial z} \right) P\, r dr dz \end{aligned} \tag{1}$$

Since w_1 and w_2 satisfy the incompressibility constraint

$$\frac{1}{r}\frac{\partial}{\partial r}(r w_1) + \frac{\partial w_2}{\partial z} = 0 \tag{2}$$

we can set

$$\int_{\Omega^e} \left(\frac{\partial w_1}{\partial r} + \frac{w_1}{r} + \frac{\partial w_2}{\partial z} \right) P\, r dr dz = \int_{\Omega^e} \left[\frac{1}{r}\frac{\partial}{\partial r}(r w_1) + \frac{\partial w_2}{\partial z} \right] P\, r dr dz = 0 \tag{3}$$

Next we add the following expression due to the constraint (2) to Eq. (1):

$$\gamma \int_{\Omega^e} \left(\frac{\partial w_1}{\partial r} + \frac{w_1}{r} + \frac{\partial w_2}{\partial z} \right) \left(\frac{\partial u}{\partial r} + \frac{u}{r} + \frac{\partial w}{\partial z} \right) r dr dz \tag{4}$$

This amounts to replacing P with

$$P = -\gamma \left(\frac{\partial u}{\partial r} + \frac{u}{r} + \frac{\partial w}{\partial z} \right) \tag{5}$$

PROPRIETARY MATERIAL. ©The McGraw-Hill Companies, Inc. All rights reserved.

The finite element model based on Eq. (1)+Eq. (4) is the same as that in Eq. (11.30) of the textbook with the coefficients

$$\begin{aligned}
\bar{K}_{ij}^{11} =& K_{ij}^{11} + 2\pi\gamma \int_{\Omega^e} \left(\frac{\partial\psi_i}{\partial r} + \frac{\psi_i}{r}\right)\left(\frac{\partial\psi_j}{\partial r} + \frac{\psi_j}{r}\right) rdrdz \\
\bar{K}_{ij}^{12} =& K_{ij}^{12} + 2\pi\gamma \int_{\Omega^e} \left(\frac{\partial\psi_i}{\partial r} + \frac{\psi_i}{r}\right)\frac{\partial\phi_j}{\partial z} rdrdz \\
\bar{K}_{ij}^{22} =& K_{ij}^{22} + 2\pi\gamma \int_{\Omega^e} \frac{\partial\phi_i}{\partial z}\frac{\partial\phi_j}{\partial z} rdrdz
\end{aligned} \tag{6}$$

Problem 10.3: Write the fully discretized finite element equations of the finite element models in Problems 10.1 and 10.2. Use the α-family of approximation.

Solution: The fully discretized models readily follow from Eqs. (10.5.30)–(10.5.32).

Problem 10.4: The equations governing unsteady slow flow of viscous, incompressible fluids in the (x, y) plane can be expressed in terms of vorticity ζ and stream function ψ:

$$\rho\frac{\partial\zeta}{\partial t} - \mu\nabla^2\zeta = 0, \quad -2\zeta - \nabla^2\psi = 0$$

Develop the semidiscrete finite element model of the equations. Discuss the meaning of the secondary variables. Use α-family of approximation to reduce the ordinary differential equations to algebraic equations.

Solution: The weak forms of the equations are given by

$$0 = \int_{\Omega^e} w_1 \left(\rho\frac{\partial\zeta}{\partial t} - \mu\nabla^2\zeta\right) dv \tag{1a}$$

$$= \int_{\Omega^e} \left(\rho w_1\frac{\partial\zeta}{\partial t} + \nabla w_1 \cdot \nabla\zeta\right) dv - \oint_{\Gamma^e} w_1\mu\frac{\partial\zeta}{\partial n} ds \tag{1b}$$

$$0 = \int_{\Omega^e} w_2 \left(\zeta - \nabla^2\psi\right) dv \tag{2a}$$

$$= \int_{\Omega^e} \left(w_2\zeta + \nabla w_2 \cdot \nabla\psi\right) dv - \oint_{\Gamma^e} w_2\frac{\partial\psi}{\partial n} ds \tag{2b}$$

Suppose that $w_0^s(x)$ and $\phi^s(x)$ are approximated as

$$\zeta(\mathbf{x}) \approx \sum_{j=1}^{m} \varphi_j(\mathbf{x})u_j \ , \quad \psi(\mathbf{x}) \approx \sum_{j=1}^{n} \psi_j(\mathbf{x})v_j \tag{3}$$

where u_j are the nodal values of ζ and v_j are nodal values of ψ. The finite element model is given by

$$\begin{bmatrix} [M] & [0] \\ [0] & [0] \end{bmatrix} \begin{Bmatrix} \{\dot{u}\} \\ \{\dot{v}\} \end{Bmatrix} + \begin{bmatrix} [A] & [0] \\ [B] & [C] \end{bmatrix} \begin{Bmatrix} \{u\} \\ \{v\} \end{Bmatrix} = \begin{Bmatrix} \{P\} \\ \{Q\} \end{Bmatrix} \tag{4}$$

PROPRIETARY MATERIAL. ©The McGraw-Hill Companies, Inc. All rights reserved.

where

$$M_{ij} = \int_{\Omega^e} \rho\varphi_i\varphi_j \; dv \; , \quad A_{ij} = \int_{\Omega^e} \mu\nabla\varphi_i \cdot \nabla\varphi_j \; dv$$
$$B_{ij} = \int_{\Omega^e} \psi_i\varphi_j \; dv \; , \quad C_{ij} = \int_{\Omega^e} \nabla\psi_i \cdot \nabla\psi_j \; dv$$
$$P_i = \oint_{\Gamma^e} q_n^1\varphi_i \; ds \; , \quad Q_i = \oint_{\Gamma^e} q_n^2\psi_i \; ds \tag{5}$$

$$q_n^1 = \mu\frac{\partial\zeta}{\partial n}, \quad q_n^2 = \frac{\partial\psi}{\partial n} \tag{6}$$

Problems 10.5–10.7 For the viscous flow problems given in Figs. P10.5–P10.7, give the specified primary and secondary degrees of freedom and their values.

General comments The specified primary and secondary variables are clearly indicated in the figures, and therefore they are obvious. In general, both velocity components are zero on fixed walls, and shear stress is zero along the line of symmetry (see the discussion in the text). Nodes on the inlet have zero vertical velocities and specified horizontal velocities.

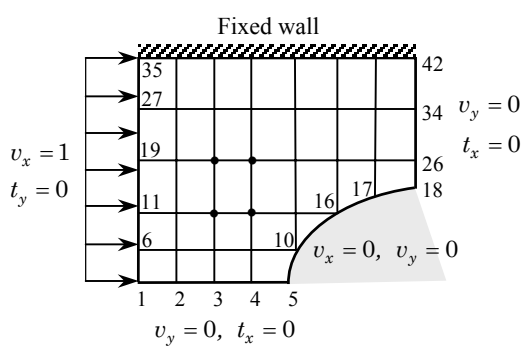

Figure P10.5

Solution of Problem 10.5: Horizontal velocity v_x is known as unity at nodes 1, 6, 11, 19 and 27; vertical velocity v_y is zero at nodes 1, 2, 3, 4, and 5, 10, 16, 17, 18 and 35 through 42; horizontal velocity is zero at nodes 5, 10, 16, 17, 18, 26, 34 and 42. The specified secondary variables are all zero: $F_y = 0$ at nodes 1, 6, 11, 19, 27; $F_y = 0$ at nodes 1, 2, 3, 4, 26 and 34.

Solution of Problem 10.6: Horizontal velocity v_x is known as zero at nodes 1–8, 15, 22, 29, 36, and 43–49; vertical velocity v_y is zero at nodes 1–7 and it is $v_y = -1$ at nodes 43 through 49; The specified secondary variables are all zero: $F_y = 0$ at nodes 1, 8, 15, 22, 29 and 36; $F_x = F_y = 0$ at nodes 7, 14, 21, 28, 35 and 42.

PROPRIETARY MATERIAL. ©The McGraw-Hill Companies, Inc. All rights reserved.

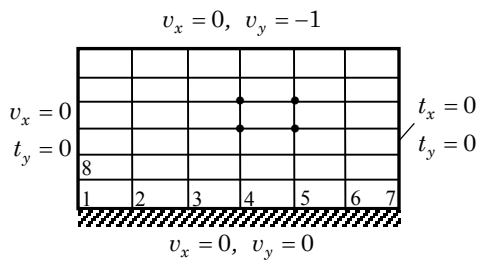

Figure P10.6

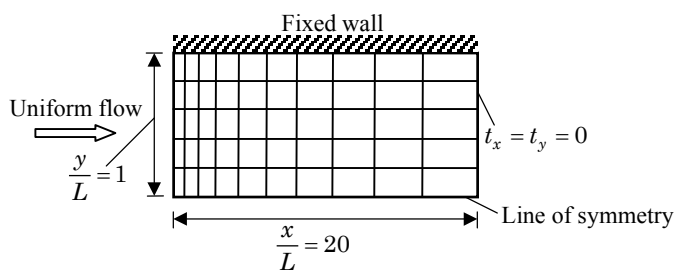

Figure P10.7

Solution of Problem 10.7: Vertical velocity component v_y and horizontal stress t_x must be zero along the horizontal line of symmetry. Rest of the boundary conditions are obvious.

Problem 10.8: Consider the flow of a viscous incompressible fluid in a square cavity (Fig. P10.8). The flow is induced by the movement of the top wall (or lid) with a velocity $v_x = \sin \pi x$. For a 5×4 mesh of linear elements, give the primary and secondary degrees of freedom.

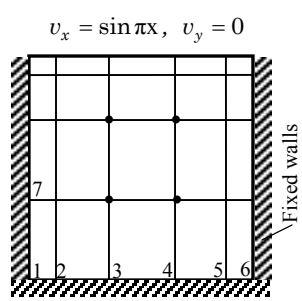

Figure P10.8

PROPRIETARY MATERIAL. © The McGraw-Hill Companies, Inc. All rights reserved.

Solution: All boundary conditions are on the primary variables. Except for the top, all velocity componenst aloing the fixed walls are zero; along the top wall, $v_y = 0$ and $v_x(x) = \sin \pi x$.

Problem 10.9: Consider the flow of a viscous incompressible fluid in a 90° plane tee. Using the symmetry and the mesh shown in Fig. P10.9. Write the specified primary and secondary variables for the computational domain.

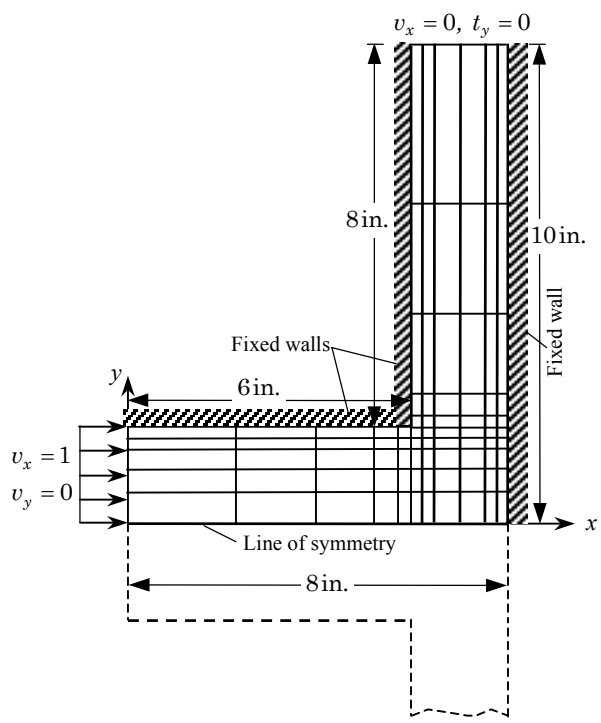

Figure P10.9

Solution: Vertical velocity component v_y and horizontal stress t_x must be zero along the horizontal line of symmetry. Rest of the boundary conditions are obvious from the figure (e.g., both velocity components are zero along the fixed wall).

Problem 10.10: Repeat Problem 10.9 for the geometry shown in Fig. P10.10.

Solution: Both velocity components are zero along the fixed wall; The velocities at the left boundary are specified to be $v_x = 1$ and $v_y = 0$ (fully-developed flow); The velocity $v_y = 0$ at the right boundary. All specified secondary variables are zero ($F_x = 0$ at the right boundary).

PROPRIETARY MATERIAL. ©The McGraw-Hill Companies, Inc. All rights reserved.

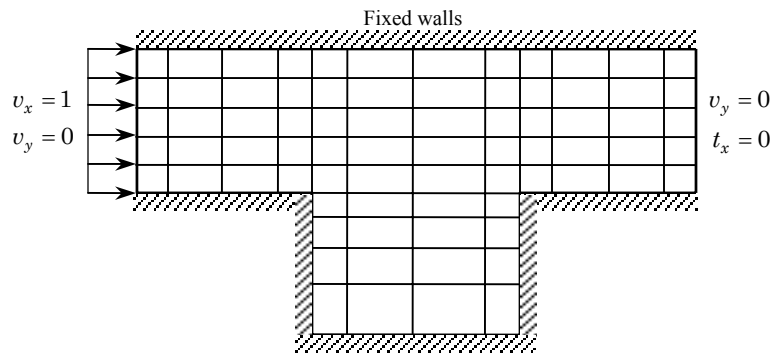

Figure P10.10

New Problem 10.1: Consider the problem of (linear) bending of beams according to the Euler–Bernoulli beam theory. The principle of minimum total potential energy states that if the beam is in equilibrium then the total potential energy associated with the equilibrium configuration is the minimum; i.e., the equilibrium displacements are those which make the total potential energy a minimum. Thus, solving the equations governing the equilibrium of the Euler–Bernoulli beam is equivalent to minimizing the total potential energy

$$\Pi(u_0, w_0) = \int_{x_a}^{x_b} \left[\frac{EA}{2} \left(\frac{du_0}{dx} \right)^2 + \frac{EI}{2} \left(\frac{d^2 w_0}{dx^2} \right)^2 \right] dx - \int_{x_a}^{x_b} (f u_0 + q w_0) \; dx \tag{1}$$

where u_0 and w_0 are the axial and transverse displacements. The necessary condition for the minimum of a functional is that its first variation be zero: $\delta\Pi = 0$, which yields the governing equations of equilibrium. As you know, the statement $\delta\Pi = 0$ is the same as the weak forms of the governing equations of the Euler–Bernoulli beam theory. The weak form requires Hermite cubic interpolation of the transverse deflection w_0. Now suppose that we wish to relax the continuity required of the interpolation used for $w_0(x)$ by introducing the relation

$$\frac{dw_o}{dx} = \varphi(x) \tag{2}$$

Then the total potential energy functional takes the form

$$\Pi(u_0, w_0, \varphi) = \int_{x_a}^{x_b} \left[\frac{EA}{2} \left(\frac{du_0}{dx} \right)^2 + \frac{EI}{2} \left(\frac{d\varphi}{dx} \right)^2 \right] dx - \int_{x_a}^{x_b} (f u_0 + q w_0) \; dx \tag{3}$$

PROPRIETARY MATERIAL. ©The McGraw-Hill Companies, Inc. All rights reserved.

Since the functional now contains only the first derivative of u_0 and φ, Lagrange (minimum, linear) interpolation can be used. Thus the original problem is replaced with the following mathematical problem: ♣ Minimize $\Pi(u_0, w_0, \varphi)$ in Eq. (3) subjected to the constraint

$$\frac{dw_0}{dx} - \varphi(x) = 0 \tag{4}$$

Develop the penalty function formulation of the constrained problem by deriving (a) the weak form and (b) the finite element model.

Note: Much of the above discussion provides a background for the problem. The statements beginning with the symbol ♣ are all that you need to answer.

Solution: The penalty functional is given by

$$\begin{aligned}\Pi_P(u_0, w_0, \varphi) = &\int_{x_a}^{x_b} \left[\frac{EA}{2}\left(\frac{du_0}{dx}\right)^2 + \frac{EI}{2}\left(\frac{d\varphi}{dx}\right)^2\right] dx \\ &- \int_{x_a}^{x_b} (fu_0 + qw_0)\ dx + \frac{\gamma}{2}\int_{x_a}^{x_b}\left(\frac{dw_0}{dx} - \varphi(x)\right)^2 dx\end{aligned} \tag{5}$$

The weak forms are given by setting $\delta_u I = 0$, $\delta_w I = 0$ and $\delta_\phi I = 0$:

$$0 = \int_{x_a}^{x_b}\left(EA\frac{d\delta u_0}{dx}\frac{du_0}{dx} - f\delta u_0\right) dx \tag{6a}$$

$$0 = \int_{x_a}^{x_b}\left[\gamma\left(\frac{dw_0}{dx} - \varphi\right)\frac{d\delta w_0}{dx} - q\delta w_0\right] dx \tag{6b}$$

$$0 = \int_{x_a}^{x_b}\left[EI\frac{d\varphi}{dx}\frac{d\delta\varphi}{dx} - \gamma\left(\frac{dw_0}{dx} - \varphi\right)\delta\varphi\right] dx \tag{6c}$$

where $(\delta u_0, \delta w_0, \delta\varphi)$ can be viewed as the weight functins (w_1, w_2, w_3).

The finite element model is given by setting

$$\begin{aligned} u_0(x) &\approx \sum_{j=1}^{m} u_j \psi_j^{(1)}(x), \quad w_1 \equiv \delta u_0 = \psi_i^{(1)} \\ w_0(x) &\approx \sum_{j=1}^{n} w_j \psi_j^{(2)}(x), \quad w_2 \equiv \delta w_0 = \psi_i^{(2)} \\ \varphi(x) &\approx \sum_{j=1}^{p} X_j \psi_j^{(3)}(x), \quad w_3 \equiv \delta\varphi = \psi_i^{(3)} \end{aligned} \tag{7}$$

We have

$$\begin{bmatrix} [K^{11}] & [K^{12}] & [K^{13}] \\ [K^{12}]^{\mathrm{T}} & [K^{22}] & [K^{23}] \\ [K^{13}]^{\mathrm{T}} & [K^{23}]^{\mathrm{T}} & [K^{33}] \end{bmatrix} \begin{Bmatrix} \{u\} \\ \{w\} \\ \{X\} \end{Bmatrix} = \begin{Bmatrix} \{F^1\} \\ \{F^2\} \\ \{F^3\} \end{Bmatrix} \tag{8}$$

PROPRIETARY MATERIAL. ©The McGraw-Hill Companies, Inc. All rights reserved.

where

$$
\begin{aligned}
K_{ij}^{11} &= \int_{x_a}^{x_b} EA \frac{d\psi_i^{(1)}}{dx} \frac{d\psi_j^{(1)}}{dx} dx, \quad K_{ij}^{12} = 0, \quad K_{ij}^{13} = 0 \\
K_{ij}^{22} &= \gamma \int_{x_a}^{x_b} \frac{d\psi_i^{(2)}}{dx} \frac{d\psi_j^{(2)}}{dx}, \quad K_{ij}^{23} = -\gamma \int_{x_a}^{x_b} \frac{d\psi_i^{(2)}}{dx} \psi_j^{(3)} dx \\
K_{ij}^{33} &= \int_{x_a}^{x_b} \left(EI \frac{d\psi_i^{(3)}}{dx} \frac{d\psi_j^{(3)}}{dx} + \gamma \psi_i^{(3)} \psi_j^{(3)} \right) dx \\
F_i^1 &= \int_{x_a}^{x_b} f \psi_i^{(1)} \, dx, \quad F_i^2 = \int_{x_a}^{x_b} q \psi_i^{(2)} \, dx, \quad F_i^3 = 0
\end{aligned} \tag{9}
$$

PROPRIETARY AND CONFIDENTIAL

This Manual is the proprietary property of The McGraw-Hill Companies, Inc. ("McGraw-Hill") and protected by copyright and other state and federal laws. **This Manual is being provided only to authorized professors and instructors for use in preparing for the classes using the affiliated textbook. No other use or distribution of this Manual is permitted. This Manual may not be sold and may not be distributed to or used by any student or other third party. No part of this Manual may be reproduced, displayed or distributed in any form or by any means, electronic or otherwise, without the prior written permission of the McGraw-Hill.**

Chapter 11

PLANE ELASTICITY

Problems 11.1–11.3: Compute the contribution of the surface forces to the global force degrees of freedom in the plane elasticity problems given in Figs. P11.1–P11.3. Give nonzero forces for at least two global nodes.

Problems 11.4–11.6: Give the connectivity matrices and the specified primary degrees of freedom for the plane elasticity problems given in Figs. P11.1–P11.3. Give only the first three rows of the connectivity matrix.

General Note: A pin-type connection implies that both components u_x and u_y displacement are zero, whereas a roller support indicates the displacement u_n normal to the wall is zero. In the following problems U_i and V_i denote the horizontal and vertical displacements, respectively, at the global ith node of the mesh, and F_i^x and F_i^y denotes the horizontal and vertical forces, respectively, at the global ith node of the mesh.

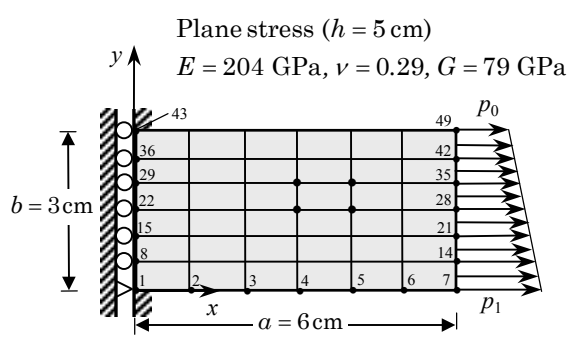

Figure P11.1

Solution to Problems 11.1 and 11.4: The specified primary degrees of freedom (i.e., displacements) are:

$$U_1 = V_1 = 0,\ U_{43} = V_{43} = 0,\ U_8 = 0,\ U_{15} = 0,\ U_{22} = 0,\ U_{29} = 0,\ U_{36} = 0$$

PROPRIETARY MATERIAL. © The McGraw-Hill Companies, Inc. All rights reserved.

The specified secondary degrees of freedom (i.e., forces) with zero magnitudes are:

$$F_2^x = F_2^y = 0,\ F_3^x = F_3^y = 0,\ F_4^x = F_4^y = 0,\ F_5^x = F_5^y = 0,\ F_6^x = F_6^y = 0$$

$$F_7^y = 0,\ F_{44}^x = F_{44}^y = 0,\ F_{45}^x = F_{45}^y = 0,\ F_{46}^x = F_{46}^y = 0$$

$$F_{47}^x = F_{47}^y = 0,\ F_{48}^x = F_{48}^y = 0,\ F_{49}^y = 0$$

The nonzero (horizontal) forces at nodes 7, 14, 21, 28, 35, 42 and 49 can be computed as follows. The procedure to calculate the nodal forces is the same as that used for the calculation of nodal sources in Chapter 8 for single-variable problems, except that the nodal values must be decomposed into the x and y components. Since the distributed force is along the x coordinate, all nodal computed nodal forces are along the x coordinate. Assume that p_0 and p_1 have the units of N/m (if they are taken as N/m^2, the final nodal values should be multiplied with the factor $h = 5 \times 10^{-2}$m).

Note that a linearly varying force q of the type

$$q(s) = q_1^e + (q_2^e - q_1^e)(\frac{s}{L_e})$$

over an element 'e' of length L_e, acting perpendicular to the length of the element, results in the nodal values of

$$\begin{aligned} F_1^e =& \frac{q_1^e L_e}{2} + \frac{(q_2^e - q_1^e)L_e}{2} \times \frac{1}{3} = \frac{q_1^e L_e}{3} + \frac{q_2^e L_e}{6} \\ F_2^e =& \frac{q_1^e L_e}{2} + \frac{(q_2^e - q_1^e)L_e}{2} \times \frac{2}{3} = \frac{q_1^e L_e}{6} + \frac{q_2^e L_e}{3} \end{aligned}$$

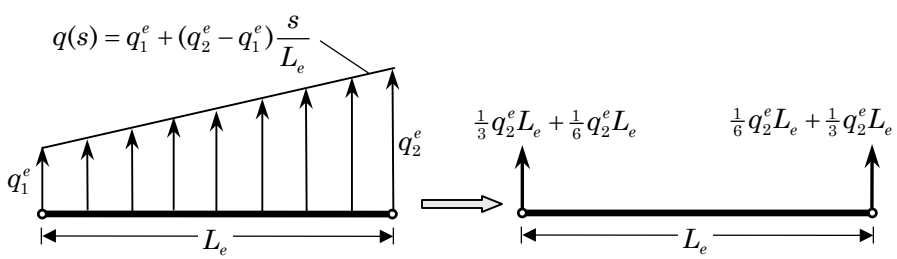

The above result can be used to find the nodal forces of the problem at hand. First note that the variation of $q(s)$ is $q(s) = p_1 + (p_0 - p_1)s/3$, which can be used to determine q_1^e and q_2^e of each line element ($L_e = 0.5$). For example, the element between global nodes 7 and 14 has the values: $q_1^{(1)} = p_1$ and $q_2^{(1)} = 5p_1/6 + p_0/6$. Similarly, the

PROPRIETARY MATERIAL. ©The McGraw-Hill Companies, Inc. All rights reserved.

next element has the values: $q_1^{(2)} = q_2^{(1)} = 5p_1/6+p_0/6$ and $q_2^{(2)} = q_1^{(3)} = 2p_1/3+p_0/3$. Hence, the horizontal forces at nodes 7 and 14, for example, are

$$\begin{aligned} F_7^x =& \frac{p_1}{6} + \frac{5p_1+p_0}{72} = \frac{17p_1+p_0}{72} \\ F_{14}^x =& \left(\frac{p_1}{12} + \frac{5p_1+p_0}{36}\right) + \left(\frac{5p_1+p_0}{36} + \frac{2p_1+p_0}{36}\right) = \frac{5p_1+p_0}{12} \end{aligned}$$

Similarly, other values can be calculated

Alternatively, the nonzero (horizontal) forces at nodes 7, 14, 21, etc. can be computed using the definition

$$Q_i^e = \int_{y_b}^{y_a} t_x(y)\psi_1^e(y)\ dy$$

where Q_i^e denotes the nodal force at node i of the element 'e', ψ_i^e denote the interpolation functions of the element, and y is the global coordinate (with origin at node 7). In the global coordinate system, with origin at node 7, the interpolation functions are given by

$$\psi_1^e(y) = \frac{y_b - y}{L_e}, \quad \psi_2^e(y) = \frac{y - y_a}{L_e}$$

First, we note that the horizontal traction t_x for the problem at hand is given by $q(y) = p_1 + (p_0 - p_1)y/3$. Then we have

$$\begin{aligned} F_7^x = Q_7^x =& \int_0^{0.5} q(y)\psi_1^{(1)}(y)\ dy = \int_0^{0.5} \left[p_1 + \frac{p_0-p_1}{3}y\right](1-2y)\ dy \\ =& \frac{p_1}{4} + \frac{p_0-p_1}{72} = \frac{17p_1+p_0}{72} \\ F_{14}^x = Q_{14}^x =& \int_0^{0.5} t_x(y)\psi_2^{(1)}(y)\ dy + \int_{0.5}^1 t_x(y)\psi_1^{(2)}(y)\ dy \\ =& \int_0^{0.5} \left[p_1 + \frac{p_0-p_1}{3}y\right](2y)dy + \int_{0.5}^1 \left[p_1 + \frac{p_0-p_1}{3}y\right] 2(1-y)dy \\ =& \frac{p_1}{4} + \frac{p_0-p_1}{36} + \left[\frac{p_1}{4} + 2\left(\frac{p_0-p_1}{18}\right)\right] = \frac{5p_1+p_0}{12} \end{aligned}$$

etc.

The connectivity matrix is given by (all that matters is the counterclockwise local node numbering; the elements are numbered as in FEM2D mesh generator)

$$[B] = \begin{bmatrix} 1 & 2 & 9 & 8 \\ 2 & 3 & 10 & 9 \\ 3 & 4 & 11 & 10 \\ \dots & \dots & \dots & \dots \\ 8 & 9 & 16 & 15 \end{bmatrix}$$

PROPRIETARY MATERIAL. ©The McGraw-Hill Companies, Inc. All rights reserved.

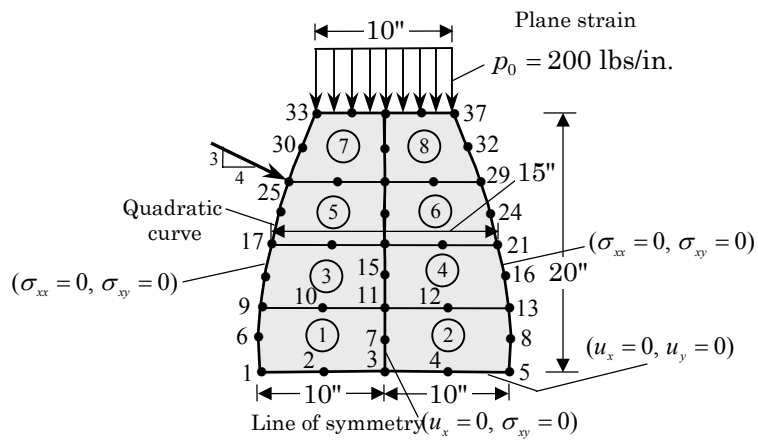

Figure P11.2

Solution to Problems 11.2 and 11.5: The specified displacements are:

$$U_1 = V_1 = 0,\ U_2 = V_2 = 0,\ U_3 = V_3 = 0,\ U_4 = V_4 = 0,\ U_5 = V_5 = 0$$

The specified nonzero forces are:

$$F^x_{25} = \frac{4}{5}F_0 = 800 \text{ lbs.} \quad F^y_{25} = -\frac{3}{5}F_0 = 600 \text{ lbs.}$$

$$F^y_{33} = -\frac{p_0 h}{6},\ F^y_{34} = -\frac{4p_0 h}{6},\ F^y_{35} = -\frac{2p_0 h}{6},\ F^y_{36} = -\frac{4p_0 h}{6},\ F^y_{37} = -\frac{p_0 h}{6}$$

The connectivity matrix is given by

$$[B] = \begin{bmatrix} 1 & 3 & 11 & 9 & 2 & 7 & 10 & 6 \\ 3 & 5 & 13 & 11 & 4 & 8 & 12 & 7 \\ 9 & 11 & 19 & 17 & 10 & 15 & 18 & 14 \\ & \cdots & \cdots & & \cdots & \cdots & & \end{bmatrix}$$

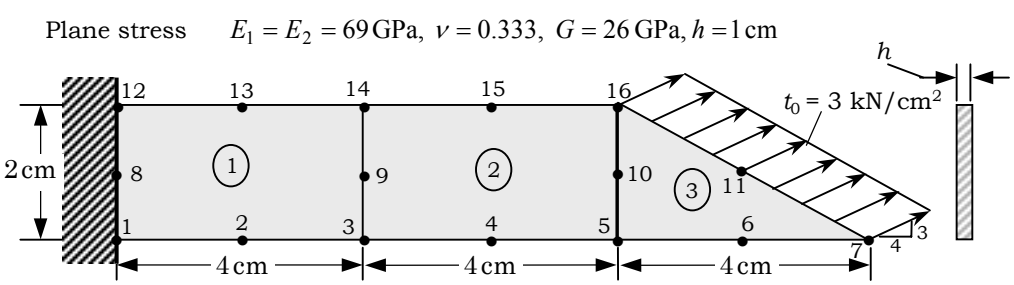

Figure P11.3

PROPRIETARY MATERIAL. © The McGraw-Hill Companies, Inc. All rights reserved.

Solution to Problems 11.3 and 11.6: The specified displacements are

$$U_1 = V_1 = 0, \quad U_8 = V_8 = 0, \quad U_{12} = V_{12} = 0$$

The nonzero specified forces are ($a = 2\sqrt{5}$, $\cos\alpha = 4/5$ and $\sin\alpha = 3/5$)

$$F_7^x = \frac{t_0 ha}{6}\cos\alpha, \; F_7^y = \frac{t_0 ha}{6}\sin\alpha, \; F_{11}^x = \frac{4t_h 0a}{6}\cos\alpha$$
$$F_{11}^y = \frac{4t_h 0a}{6}\sin\alpha, \quad F_{16}^x = \frac{t_h 0a}{6}\cos\alpha, \quad F_{16}^y = \frac{t_h 0a}{6}\sin\alpha$$

The connectivity matrix is given by

$$[B] = \begin{bmatrix} 1 & 3 & 14 & 12 & 2 & 9 & 13 & 8 \\ 3 & 5 & 16 & 14 & 4 & 10 & 15 & 9 \\ 5 & 7 & 16 & 6 & 11 & 10 & \times & \times \end{bmatrix}$$

Problem 11.7: Consider the cantilevered beam of length 6 cm, height 2 cm, thickness 1 cm, and material properties $E = 3 \times 10^7$ N/cm^2 and $\nu = 0.3$, and subjected to a bending moment of 600 N cm at the free end, (as shown in P11.7). Replace the moment by an equivalent distributed force at $x = 6$ cm, and model the domain by a nonuniform 10×4 mesh of linear rectangular elements and quadratic rectangular elements. Identify the special displacements and global forces.

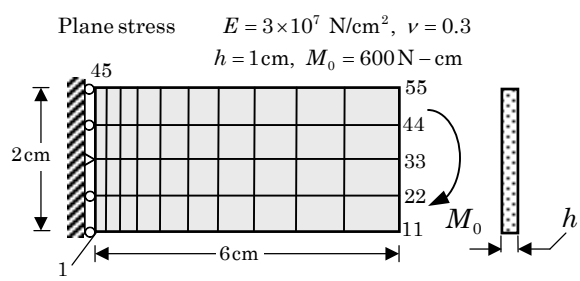

Figure P11.7

Solution: The specified displacements are:

$$U_1 = 0, \; U_6 = V_6 = 0, \; U_{11} = 0$$

The specified nonzero forces are at nodes 11, 22, 33, 44 and 55. To calculate the magnitude, assume that the force causing the moment is linear with y:

$$\sigma_{xx} = \sigma_0 \frac{2y}{b}$$

PROPRIETARY MATERIAL. ©The McGraw-Hill Companies, Inc. All rights reserved.

where the origin of the (x, y) coordinate system is taken at node 23, with x coordinate horizontal and y coordinate vertical, and $b = 2$cm is the dimension along the $y-$coordinate. Then we have

$$M_0 = \int_{-\frac{b}{2}}^{\frac{b}{2}} \sigma_{xx} y \; dy = \frac{\sigma_0 b^2}{6}$$

Hence $\sigma_0 = \frac{6M_0}{b^2} = 900\text{N/cm}^2$. Then we can calculate the forces at nodes

$$F_{11}^x = \int_{-b/2}^{-b/4} \sigma_{xx}\psi_1^1 dy = -\int_{-b/2}^{b/4} \sigma_{xx}(1 + 4y/b)dy = -\frac{5\sigma_0 b}{48} = -187.50\text{N}$$

$$F_{22}^x = \int_{-b/2}^{-b/4} \sigma_{xx}(4y/b + 2)dy - \int_{-b/4}^{0} \sigma_{xx}(4y/b)dy = -\frac{\sigma_0 b}{12} - \frac{\sigma_0 b}{24} = -225 \text{ N}$$

$$F_{33}^x = \int_{-b/4}^{0} \sigma_{xx}(4y/b + 1)dy + \int_{0}^{b/4} \sigma_{xx}(1 - 4y/b)dy = -\frac{\sigma_0 b}{48} + \frac{\sigma_0}{48} = 0 \text{ N}$$

By antisymmetry, we have $F_{44}^x = -F_{22}^x$ and $F_{55}^x = -F_{11}^x$.

Problem 11.8: Consider the ("transition") element shown in Fig. P11.8. Define the generalized displacement vector of the element by

$$\{u\} = \{u_1, v_1, \Theta_1, u_2, v_2, u_3, v_3\}^T$$

and represent the displacement components u and v by

$$u = \psi_1 u_1 + \psi_2 u_2 + \psi_3 u_3 + \frac{b}{2}\eta\psi_1\theta_1, \quad v = \psi_1 v_1 + \psi_2 v_2 + \psi_3 v_3$$

where ψ_1 is the interpolation function for the beam, and ψ_2 and ψ_3 are the interpolation functions for nodes 2 and 3:

$$\psi_1 = \frac{1}{2}(1 - \xi), \quad \psi_2 = \frac{1}{4}(1 + \xi)(1 - \eta), \quad \psi_3 = \frac{1}{4}(1 + \xi)(1 + \eta)$$

Derive the stiffness matrix for the element.

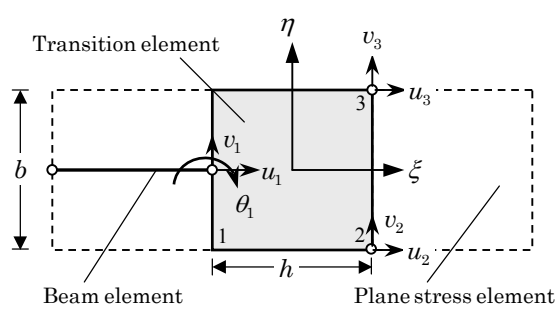

Figure P11.8

PROPRIETARY MATERIAL. ©The McGraw-Hill Companies, Inc. All rights reserved.

Solution: The individual beam and plane elasticity (plane stress) element are shown in the figure below. Both the plan stress and beam elements have the same height b (not depicted in the figure below). Let us introduce the following nodal displacement vector:

$$\mathbf{\Delta} = \{u_1 \ v_1 = w_2 \ \theta_2 = \Theta_1 \ u_2 \ v_2 \ u_3 \ v_3\}^{\mathrm{T}}$$

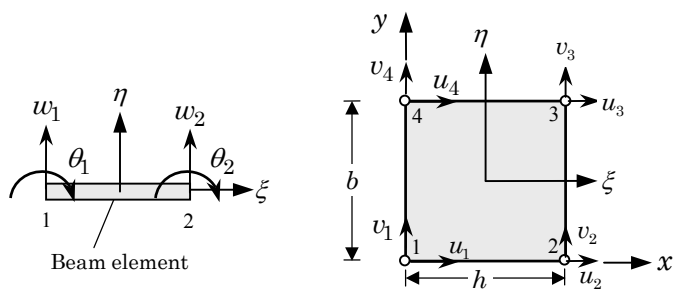

Plane stress element

The interpolation functions associated with nodes 2 and 3 are those of the plane stress element and they are

$$\psi_2(\xi,\eta) = \frac{1}{4}(1+\xi)(1-\eta), \quad \psi_3(\xi,\eta) = \frac{1}{4}(1+\xi)(1+\eta) \tag{1}$$

Node 3 of Fig. P11.8 is a beam node that is connected to the plane stress element. Its interpolation function is

$$\psi_1(\xi,\eta) = \frac{1}{2}(1-\xi)$$

The finite element approximation of the displacements (u_x, u_y) of the transition element are of the form

$$u_x = u_1\psi_1 + \frac{b}{2}\eta\psi_1\Theta_1 + u_2\psi_2 + u_3\psi_3, \quad u_y = v_1\psi_1 + v_2\psi_2 + v_3\psi_3 \tag{2}$$

Then $\mathbf{\Psi}$ of Eq. (11.4.2) becomes

$$\begin{aligned} \mathbf{\Psi} &= \begin{bmatrix} \psi_1 & 0 & 0.5b\eta\psi_1 & \psi_2 & 0 & \psi_3 & 0 \\ 0 & \psi_1 & 0 & 0 & \psi_2 & 0 & \psi_3 \end{bmatrix} \\ \mathbf{\Delta} &= \{\, u_1 \quad v_1 \quad \Theta_1 \quad u_2 \quad v_2 \quad u_3 \quad v_3 \,\}^{\mathrm{T}} \end{aligned} \tag{3}$$

The coordinate transformation is given by the usual expression, with the coordinates $x_1 = x_4 = 0$, $x_2 = x_3 = h$, $y_1 = y_2 = 0$, and $y_3 = y_4 = b$:

$$x = \sum_{i=1}^{4} x_i\psi_i = \frac{h}{2}(1+\xi), \quad y = \sum_{i=1}^{4} y_i\psi_i = \frac{b}{2}(1+\eta) \tag{4}$$

PROPRIETARY MATERIAL. ©The McGraw-Hill Companies, Inc. All rights reserved.

Note that the Jacobian matrix and its inverse are

$$\mathbf{J} = \begin{bmatrix} \frac{\partial x}{\partial \xi} & \frac{\partial y}{\partial \xi} \\ \frac{\partial x}{\partial \eta} & \frac{\partial y}{\partial \eta} \end{bmatrix} = \begin{bmatrix} \frac{h}{2} & 0 \\ 0 & \frac{b}{2} \end{bmatrix}, \quad \mathbf{J}^{-1} = \begin{bmatrix} \frac{2}{h} & 0 \\ 0 & \frac{2}{b} \end{bmatrix}$$

and the transformation between (x, y) and (ξ, η) is given by

$$\begin{Bmatrix} \frac{\partial \psi_i^e}{\partial x} \\ \frac{\partial \psi_i^e}{\partial y} \end{Bmatrix} = [J]^{-1} \begin{Bmatrix} \frac{\partial \psi_i^e}{\partial \xi} \\ \frac{\partial \psi_i^e}{\partial \eta} \end{Bmatrix} = \begin{bmatrix} \frac{2}{h} & 0 \\ 0 & \frac{2}{b} \end{bmatrix} \begin{Bmatrix} \frac{\partial \psi_i^e}{\partial \xi} \\ \frac{\partial \psi_i^e}{\partial \eta} \end{Bmatrix} \tag{5}$$

Finally, matrix $\mathbf{B}$ required to evaluate the stiffness matrix in (11.4.9) can be computed using Eq. (11.4.4):

$$\begin{aligned}
\mathbf{B} = \mathbf{D}\mathbf{\Psi} &= \begin{bmatrix} \frac{\partial}{\partial x} & 0 \\ 0 & \frac{\partial}{\partial y} \\ \frac{\partial}{\partial y} & \frac{\partial}{\partial x} \end{bmatrix} \begin{bmatrix} \psi_1 & 0 & 0.5b\eta\psi_1 & \psi_2 & 0 & \psi_3 & 0 \\ 0 & \psi_1 & 0 & 0 & \psi_2 & 0 & \psi_3 \end{bmatrix} \\
&= \begin{bmatrix} \frac{2}{h}\frac{\partial}{\partial \xi} & 0 \\ 0 & \frac{2}{b}\frac{\partial}{\partial \eta} \\ \frac{2}{b}\frac{\partial}{\partial \eta} & \frac{2}{h}\frac{\partial}{\partial \xi} \end{bmatrix} \begin{bmatrix} \psi_1 & 0 & 0.5b\eta\psi_1 & \psi_2 & 0 & \psi_3 & 0 \\ 0 & \psi_1 & 0 & 0 & \psi_2 & 0 & \psi_3 \end{bmatrix} \\
&= \begin{bmatrix} -\frac{1}{h} & 0 & -\frac{b}{2h}\eta & \frac{1}{2h}(1-\eta) & 0 & \frac{1}{2h}(1+\eta) & 0 \\ 0 & 0 & 0 & 0 & -\frac{1}{2b}(1+\xi) & 0 & \frac{1}{2b}(1+\xi) \\ 0 & -\frac{1}{h} & \frac{1}{2}(1-\xi) & -\frac{1}{2b}(1+\xi) & \frac{1}{2h}(1-\eta) & \frac{1}{2b}(1+\xi) & \frac{1}{2h}(1+\eta) \end{bmatrix}
\end{aligned} \tag{6}$$

Problem 11.9: Consider a square, isotropic, elastic body of thickness h shown in Fig. P11.9. Suppose that the displacements are approximated by

$$u_x(x, y) = (1 - x)yu_x^1 + x(1 - y)u_x^2, \quad u_y(x, y) = 0$$

Assuming that the body is in a plane state of stress, derive the 2×2 stiffness matrix for the unit square

$$[K] \begin{Bmatrix} u_x^1 \\ u_x^2 \end{Bmatrix} = \begin{Bmatrix} F_1 \\ F_2 \end{Bmatrix}$$

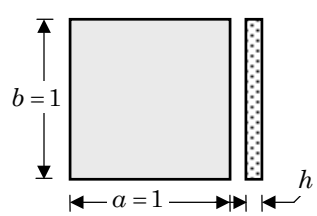

Figure P11.9

PROPRIETARY MATERIAL. © The McGraw-Hill Companies, Inc. All rights reserved.

Solution: The interpolation functions are $\psi_1(x,y) = (1-x)y, \quad \psi_2 = (1-y)x$. Obviously, the 2D element has just 2 nodes (diagonally opposite sides of the unit square) The element stiffness matrix is given by

$$[K] = \frac{(\alpha+\beta)h}{6}\begin{bmatrix} 2 & -1 \\ -1 & 2 \end{bmatrix}, \quad \alpha = \frac{E}{1-\nu^2}, \ \beta = \frac{E}{2(1+\nu)}$$

Problems 11.10–11.14: For the plane elasticity problems shown in Figs. P11.10–11.16, give the boundary degrees of freedom and compute the contribution of the specified forces to the nodes.

Solution to Problem 11.10: Note that the element is a quadratic element. The distributed force per unit length (along the $y-$axis) is $\tau_0 = 3h$ kN/cm, where thickness of the body is $h = 1$ cm. The specified non-zero nodal loads are (height $b = 2$ cm)

$$F_7^y = \frac{\tau_0 b}{6} = 1,000\text{N}, \quad F_{11}^y = \frac{4\tau_0 b}{6} = 4,000\text{N}, \quad F_{18}^y = \frac{\tau_0 b}{6} = 1,000\text{N}$$

The specified nodal displacements are

$$U_1 = V_1 = U_8 = V_8 = U_{12} = V_{12} = 0$$

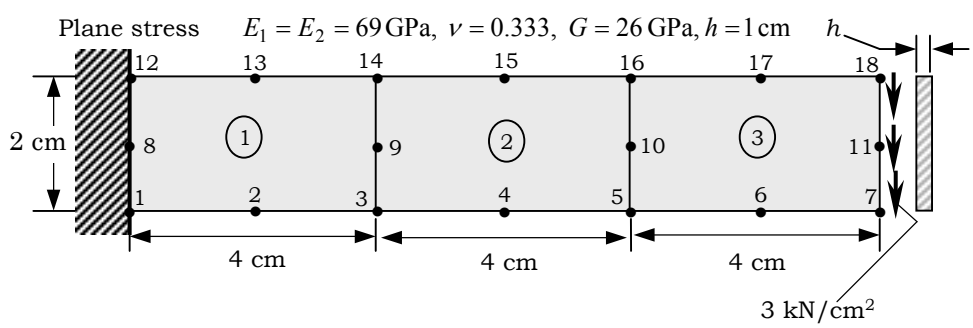

Figure P11.10

Solution to Problem 11.11: This has two parts. For (a), $u_x = 0$ along the vertical line of symmetry and $u_y = 0$ along the horizontal line of symmetry. The specified nonzero forces are computed using the formula

$$F_I^x = -\frac{p_0 h}{2}, \quad F_J^x = -p_0 h$$

where I is an end node, J is an interior node, and h is the element length along the force.

PROPRIETARY MATERIAL. ©The McGraw-Hill Companies, Inc. All rights reserved.

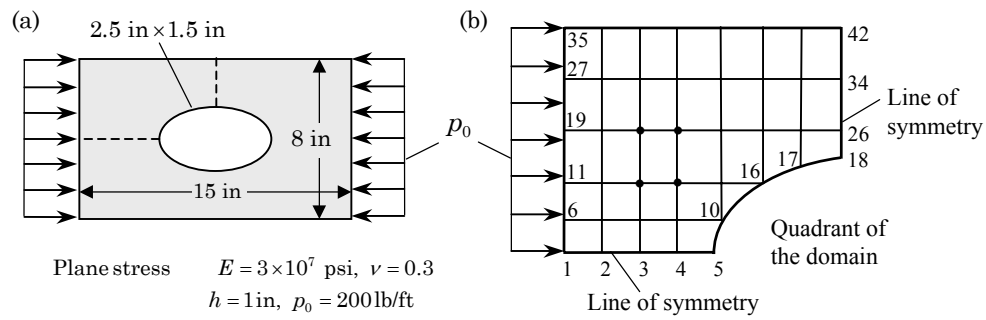

Figure P11.11

For (b), $u_x = 0$ along the vertical line of symmetry (i.e., nodes 18, 26, 34 and 42) and $u_y = 0$ along the horizontal line of symmetry (i.e., nodes 1 through 5). The specified nonzero forces are computed using the formula

$$F_I^x = -\frac{p_0 h}{2}, \quad F_J^x = -p_0 h$$

where I is an end node ($I = 1$ and 35), J is an interior node ($J = 6$, 11, 19 and 27), and h is the element length along the force.

Solution to Problem 11.12: The specified displacements are obvious from the figure ($U_1 = V_1 = \cdots = U_9 = V_9 = 0$). The nonzero specified forces are ($h = 0.75$ m)

$$F_{37}^y = -\frac{0.75 p_0}{2} = -37.5 \text{ kN}, \; F_{38}^y = -75 \text{ kN}, \; F_{39}^y = -75 \text{ kN}$$

$$F_{40}^y = -75 \text{ kN}, \; F_{41}^y = -37.5 \text{ kN}$$

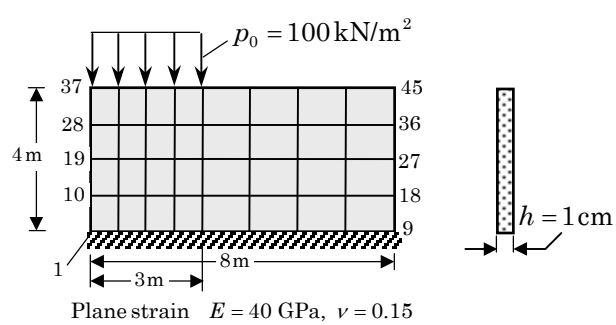

Figure P11.12

PROPRIETARY MATERIAL. © The McGraw-Hill Companies, Inc. All rights reserved.

Solution to Problem 11.13: By symmetry, the displacement component u_x on $x = 0$ is zero and the displacement component u_y on $y = 0$ is zero. Hence, the known displacements are

$$V_1 = V_2 = V_3 = V_4 = 0, \quad U_{14} = U_{15} = U_{16} = 0$$

The non-zero known forces are

$$F_4^x = \frac{p_0 hb}{4}, \quad F_8^x = \frac{p_0 hb}{2}, \quad F_{19}^x = \frac{p_0 hb}{4}$$

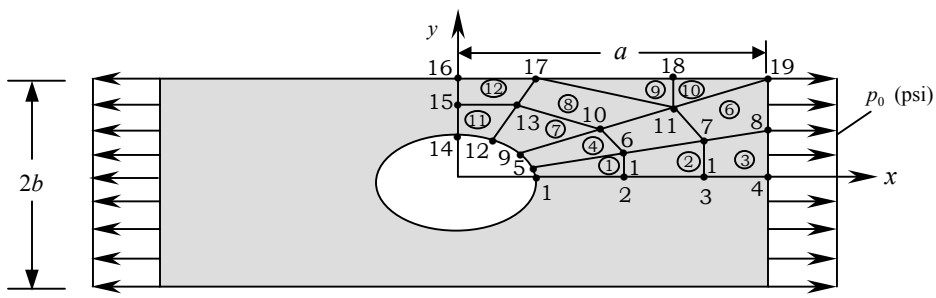

One quadrant of the domain is used in the finite element analysis (isotropic plate of thickness h)

Figure P11.13

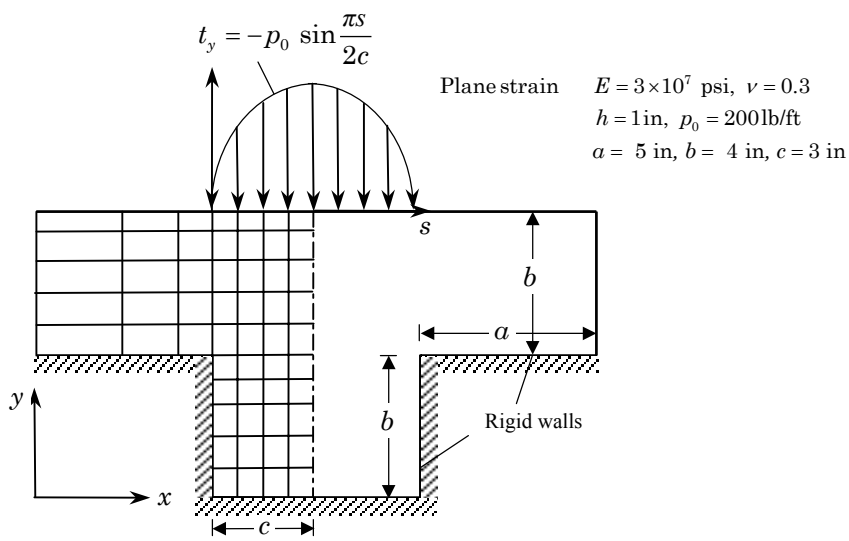

Figure P11.14

PROPRIETARY MATERIAL. © The McGraw-Hill Companies, Inc. All rights reserved.

Solution to Problem 11.14: The horizontal displacement u_x along the line of symmetry must be zero. Both displacement components are zero along the fixed walls. The only nonzero forces are at the five nodes under the sinusoidal load. They can be computed using

$$F^e_{yi} = \int_{s_a}^{s_b} t_y(s)\psi^e_i(s)\ ds$$

where ψ^e_i are the 1-D interpolation functions

$$\psi_1(s) = \frac{s_b - s}{h_e}, \quad \psi_2(s) = \frac{s - s_a}{h_e}$$

The following integrals are useful

$$\int \sin as\ ds = -\frac{1}{a}\cos as, \quad \int s\sin as\ ds = \frac{1}{a^2}\sin as - \frac{s}{a}\cos as$$

We obtain ($a = \pi/2c$)

$$\begin{aligned}
F^e_{y1} &= -\frac{p_0}{h_e}\int_{s_a}^{s_b} \sin as\,(s_b - s)\ ds = -\frac{p_0}{h_e}\left[-\frac{s_b}{a}\cos as - \frac{1}{a^2}\sin as + \frac{s}{a}\cos as\right]_{s_a}^{s_b} \\
&= -\frac{p_0}{h_e}\left[-\frac{4c^2}{\pi^2}\left(\sin\frac{\pi s_b}{2c} - \sin\frac{\pi s_a}{2c}\right) + \frac{2c}{\pi}\left(s_b\cos\frac{\pi s_b}{2c} - s_a\cos\frac{\pi s_a}{2c}\right)\right. \\
&\quad \left. - \frac{2cs_b}{\pi}\left(\cos\frac{\pi s_b}{2c} - \cos\frac{\pi s_a}{2c}\right)\right] \\
F^e_{y2} &= -\frac{p_0}{h_e}\int_{s_a}^{s_b} \sin as\,(s - s_a)\ ds = -\frac{p_0}{h_e}\left[\frac{1}{a^2}\sin as - \frac{s}{a}\cos as + \frac{s_a}{a}\cos as\right]_{s_a}^{s_b} \\
&= -\frac{p_0}{h_e}\left[\frac{4c^2}{\pi^2}\left(\sin\frac{\pi s_b}{2c} - \sin\frac{\pi s_a}{2c}\right) - \frac{2c}{\pi}\left(s_b\cos\frac{\pi s_b}{2c} - s_a\cos\frac{\pi s_a}{2c}\right)\right. \\
&\quad \left. + \frac{2cs_a}{\pi}\left(\cos\frac{\pi s_b}{2c} - \cos\frac{\pi s_a}{2c}\right)\right]
\end{aligned}$$

The global forces are obtained as

$$F_{y1} = F^1_{1y}, \quad F_{y2} = F^1_{2y} + F^2_{1y}, \quad \ldots$$

PROPRIETARY AND CONFIDENTIAL

This Manual is the proprietary property of The McGraw-Hill Companies, Inc. ("McGraw-Hill") and protected by copyright and other state and federal laws. **This Manual may not be sold and may not be distributed to or used by any student or other third party. No part of this Manual may be reproduced, displayed or distributed in any form or by any means, electronic or otherwise, without the prior written permission of the McGraw-Hill.**

PROPRIETARY MATERIAL. © The McGraw-Hill Companies, Inc. All rights reserved.

Chapter 12

BENDING OF ELASTIC PLATES

Problem 12.1: Investigate the displacement and slope compatibility of the nonconforming rectangular element CPT(N). *Hint:* Use the edge connecting nodes 1 and 2 and check if the displacement w and slopes $\partial w/\partial x$ and $\partial w/\partial y$ are continuous.

Solution: Consider the interface 1–2 between element A and element B (see the figure below). The displacement w and slopes $\theta_x = \partial w/\partial x$ and $\theta_y = \partial w/\partial y$ along this edge are [from Eq. (12.2.24)]

$$
\begin{aligned}
w(x,0) &= a_1 + a_2 x + a_5 x^2 + a_9 x^3 \\
\left(\frac{\partial w}{\partial x}\right)_{y=0} &= a_2 + 2a_5 x + 3a_9 x^2 \\
\left(\frac{\partial w}{\partial y}\right)_{y=0} &= a_3 + a_4 x + a_7 x^2 + a_{11} x^3
\end{aligned}
$$

Since there are four degrees of freedom, (w, θ_x) at each node, along the edge 1–2, w is uniquely determined by the four conditions from both elements and therefore it is continuous across the interface. Thus, a_1, a_2, a_5 and a_9 are uniquely determined in terms of w_1, w_2, θ_{x1} and θ_{x2}. This also implies that θ_x is also uniquely defined along the interface. This cannot be said about θ_y since the expression for θ_y contains 4 constants that are not determined by the four degrees of freedom $(w_1, \theta_{x1}, w_2, \theta_{x2})$. There are only two other conditions, namely $(\theta_{y1}, \theta_{y2})$, available at the two nodes on the interface 1–2, whereas there are 4 constants. Thus, the slope θ_y normal to the edge 1–2 is not uniquely defined along the edge 1–2.

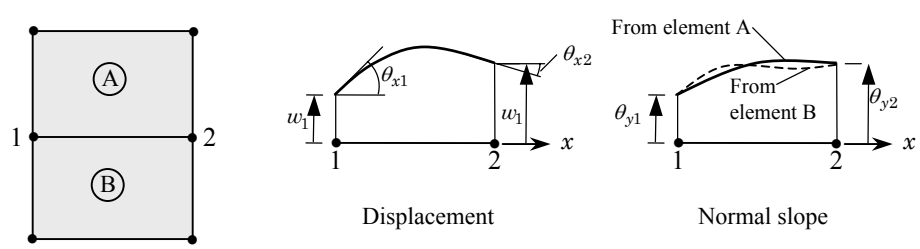

PROPRIETARY MATERIAL. © The McGraw-Hill Companies, Inc. All rights reserved.

Problems 12.2–12.10: For the plate bending problems (CPT and SDT) given in Figs. P12.2–P12.10, give the specified primary and secondary degrees of freedom and their values for the meshes shown. The dashed lines in the figures indicate simply supported boundary conditions Use E, ν, h, a, and b in formulating the data. You are required to give values of the loads for at least a couple of representative loads.

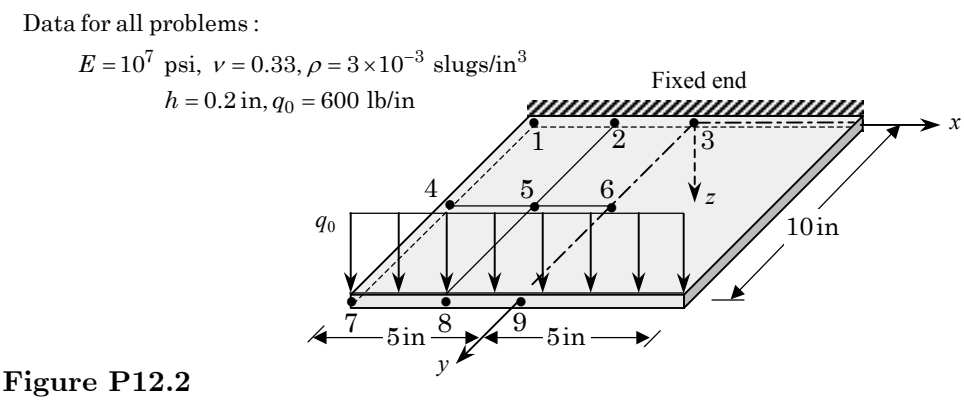

Figure P12.2

Solution to Problem 12.2: For CPT, use $\frac{\partial w}{\partial x}$ in place of ϕ_x and $\frac{\partial w}{\partial y}$ in place of ϕ_y.

Use symmetry about $x = 0$ line. All primary degrees of freedom are zero along the $y = 0$ line (fixed edge); $w = 0$ and $\frac{\partial w}{\partial x}$ or $\phi_x = 0$ along the symmetry line (i.e., $x = 0$ line). Nodal forces at the $y = 10$ in. line for FSDT are given by $\frac{q_0 h}{2}$ at the outside nodes and $q_0 h$ at the inner nodes, h is the element length parallel to the x-axis). Thus, we have $F_7 = F_9 = 750$ lb and $F_8 = 1,500$ lb.

For $CPT(N)$ we have (using the load vector of the Euler–Bernoulli beam element) $F_7 = F_9 = 750$ lb, $F_8 = 1,500$ lb, $M_{x7} = -312.5$ lb-in., $M_{y8} = 0$ lb-in., and $M_{x9} = 312.5$ lb-in.

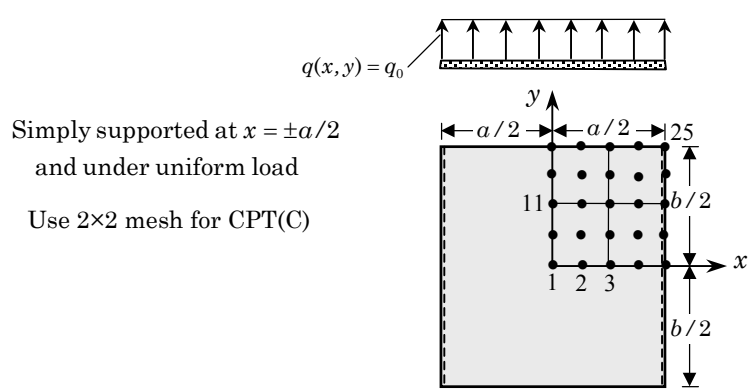

Figure P12.3

PROPRIETARY MATERIAL. ©The McGraw-Hill Companies, Inc. All rights reserved.

Solution to Problem 12.3: The specified displacement degrees of freedom are

$$w_3 = w_6 = w_7 = w_8 = w_9 = 0; \quad \theta_{x1} = \theta_{x4} = \theta_{x7} = \theta_{x8} = \theta_{x9} = 0$$
$$\theta_{y1} = \theta_{y2} = \theta_{y3} = \theta_{y6} = \theta_{y9} = 0, \quad \theta_{xy1} = 0$$

For SDT, use ϕ_x in place of $\theta_x = \frac{\partial w}{\partial x}$ and ϕ_y in place of $\theta_y = \frac{\partial w}{\partial y}$ in place of ϕ_y.

In SDT, the load vector of uniformly loaded nine-node element can be obtained from the tensor product of the load vectors of 1-D quadratic elements. The load vector of a 1-D quadratic element of length h_x with uniform load q_0 is

$$\frac{q_0 h_x}{6}\begin{Bmatrix} 1 \\ 4 \\ 1 \end{Bmatrix}$$

Hence the load vector for a nine-node quadratic element with uniform load is

$$\frac{q_0 h_x}{6}\begin{Bmatrix} 1 \\ 4 \\ 1 \end{Bmatrix}\frac{h_y}{6}\begin{Bmatrix} 1 \\ 4 \\ 1 \end{Bmatrix}^{\mathrm{T}} = \frac{q_0 h_x h_y}{36}\begin{bmatrix} 1 & 4 & 1 \\ 4 & 16 & 4 \\ 1 & 4 & 1 \end{bmatrix}$$

Thus, for the SDT, the loads at different nodes are ($h_x = a/4$ and $h_y = b/4$)

$$F_1 = \frac{q_0 ab}{576}, \quad F_2 = \frac{4q_0 ab}{576}, \quad F_3 = \frac{2q_0 ab}{576}, \quad F_4 = \frac{4q_0 ab}{576}, \quad F_5 = \frac{q_0 ab}{576}$$
$$F_6 = \frac{4q_0 ab}{576}, \quad F_7 = \frac{16q_0 ab}{576}, \quad F_8 = \frac{8q_0 ab}{576}, \quad F_9 = \frac{16q_0 ab}{576}, \quad F_{10} = \frac{4q_0 ab}{576}$$
$$F_{11} = \frac{2q_0 ab}{576}, \quad F_{12} = \frac{8q_0 ab}{576}, \quad F_{13} = \frac{4q_0 ab}{576}, \quad F_{14} = \frac{8q_0 ab}{576}, \quad F_{15} = \frac{2q_0 ab}{576}$$

etc.

For the CPT(C) element, the given mesh must be interpreted as a 2×2 mesh of four-node elements (a total of nine nodes). The load vector of uniformly loaded four-node element (of sides h_x and h_y) can be obtained from the tensor product of the load vectors of 1-D Euler–Bernoulli beam elements. The load vector of an Euler–Bernoulli beam element of length h_x with uniform load q_0 is (the rotations used in plate bending do not include the negative sign)

$$\frac{q_0 h_x}{12}\begin{Bmatrix} 6 \\ h_x \\ 6 \\ -h_x \end{Bmatrix}$$

Hence, the load vector for a four-node Hermite cubic element with uniform load is

$$\frac{q_0 h_x}{12}\begin{Bmatrix} 6 \\ h_x \\ 6 \\ -h_x \end{Bmatrix}\frac{h_y}{12}\begin{Bmatrix} 6 \\ h_y \\ 6 \\ -h_y \end{Bmatrix}^{\mathrm{T}} = \frac{q_0 h_x h_y}{144}\begin{bmatrix} 36 & 6h_y & 36 & -6h_y \\ 6h_x & h_x h_y & 6h_x & -h_x h_y \\ 36 & 6h_y & 36 & -6h_y \\ -6h_x & -h_x h_y & -6h_x & h_x h_y \end{bmatrix}$$

PROPRIETARY MATERIAL. ©The McGraw-Hill Companies, Inc. All rights reserved.

The 2×2 submatrix of coefficients (there are four such submatrices) correspoind to the four degrees (Q_n, M_x, M_y, M_{xy}) of freedom at the node. Thus, at node 1 we have ($h_x = a/4$ and $h_y = b/4$)

$$Q_1 = \frac{q_0 ab}{64}, \quad M_{x1} = \frac{q_0 a^2 b}{64 \times 24}, \quad M_{y1} = \frac{q_0 ab^2}{64 \times 24}, \quad M_{xy1} = \frac{q_0 a^2 b^2}{256 \times 144}$$

At node 2 we have

$$Q_2 = \frac{72 q_0 ab}{16 \times 144}, \quad M_{x2} = 0, \quad M_{y2} = -\frac{12 q_0 ab^2}{64 \times 144}, \quad M_{xy2} = 0$$

At node 5, we have

$$Q_5 = \frac{4 \times 36 q_0 ab}{16 \times 144}, \quad M_{x5} = 0, \quad M_{y5} = 0, \quad M_{xy5} = 0$$

and so on.

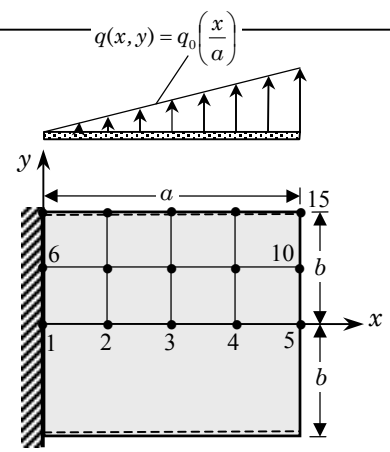

Simply supported at $y = \pm b/2$
and under linearly varying load

Figure P12.4

Solution to Problem 12.4: The specified primary degrees of freedom in CPT(C) are

$$w_1 = w_6 = w_{11} = 0, \quad \theta_{y1} = \theta_{y6} = \theta_{y11} = \theta_{y12} = \theta_{y13} = \theta_{y14} = \theta_{y15} = 0$$
$$\theta_{x1} = \theta_{x2} = \theta_{x3} = \theta_{x4} = \theta_{x5} = \theta_{x6} = \theta_{x11} = 0$$

For SDT replace θ_x with ϕ_y and θ_y with ϕ_y.

As for the load vector, we have a load that varies linearly with the x-ccordinate. On a typical element, the load varies in the natural coordinate system as (see the figure below)

$$q(\xi, \eta) = q_1 \psi_1(\xi) + q_2 \psi_2(\xi), \quad \psi_1(\xi) = \frac{1}{2}(1 - \xi), \quad \psi_2(\xi) = \frac{1}{2}(1 + \xi)$$

PROPRIETARY MATERIAL. ©The McGraw-Hill Companies, Inc. All rights reserved.

Thus, the load vector components at nodes 1 and 2 of the SDT element are ($F_4^e = F_1^e$ and $F_2^e = F_4^e$)

$$F_1^e = \frac{h_y}{2}\left(\frac{q_1^e h_x}{2} + \frac{(q_2^e - q_1^e)h_x}{6}\right) = \frac{h_y}{2}\left(\frac{q_1^e h_x}{3} + \frac{q_2^e h_x}{6}\right)$$
$$F_2^e = \frac{h_y}{2}\left(\frac{q_1^e h_x}{2} + \frac{2(q_2^e - q_1^e)h_x}{6}\right) = \frac{h_y}{2}\left(\frac{q_1^e h_x}{6} + \frac{q_2^e h_x}{3}\right)$$

For example, we have

$$F_1 = 0.5F_6 = F_{11} = \frac{q_0 h_y}{2}\left(\frac{h_x h_x}{6a}\right) = \frac{q_0 ab}{384}$$
$$F_2 = 0.5F_7 = F_{12} = \frac{q_0 h_y}{2}\left(\frac{h_x h_x}{3a}\right) + \frac{q_0 h_y}{2}\left(\frac{h_x h_x}{3a} + \frac{h_x h_x}{3a}\right) = \frac{q_0 ab}{64}$$
$$F_3 = 0.5F_8 = F_{13} = \frac{q_0 h_y}{2}\left(\frac{h_x h_x}{6a} + \frac{2h_x h_x}{3a}\right) + \frac{q_0 h_y}{2}\left(\frac{2h_x h_x}{3a} + \frac{3h_x h_x}{6a}\right)$$
$$= \frac{q_0 ab}{32}$$

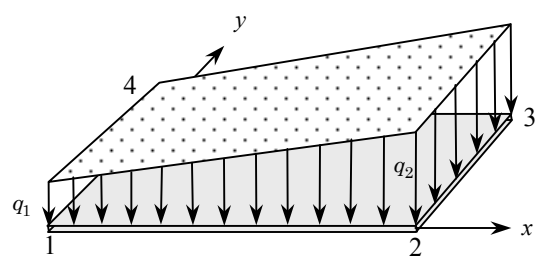

For the CPT(N) element, the load vector can be computed using the load vector of a Euler–Bernoulli beam element foir linearly varying load (see Example 5.2.1). We have

$$\frac{q_0 h_x}{a}\begin{Bmatrix} 9h_x + 30x_a \\ h_x(2h_x + 5x_a) \\ 21h_x + 30x_a \\ -h_x(3h_x + 5x_a) \end{Bmatrix} \frac{h_y}{12}\begin{Bmatrix} 6 \\ h_y \\ 6 \\ -h_y \end{Bmatrix}^{\mathrm{T}}$$
$$= \frac{q_0 h_x h_y}{12a}\begin{bmatrix} 6(9h_x + 30x_a) & h_y(9h_x + 30x_a) & 6(9h_x + 30x_a) & -h_y(9h_x + 30x_a) \\ 6h_x(2h_x + 5x_a) & h_y h_x(2h_x + 5x_a) & -6h_x(2h_x + 5x_a) & h_y h_x(2h_x + 5x_a) \\ 6(21h_x + 30x_a) & h_y(21h_x + 30x_a) & 6(21h_x + 30x_a) & -h_y(21h_x + 30x_a) \\ 6h_x(3h_x + 5x_a) & h_y h_x(3h_x + 5x_a) & 6h_x(3h_x + 5x_a) & -h_y h_x(3h_x + 5x_a) \end{bmatrix}$$

Hence, the loads at node 1, for example, are

$$Q_1 = \frac{9q_0 ab}{64}, \quad M_{x1} = \frac{q_0 a^2 b}{128}, \quad M_{y1} = \frac{3q_0 ab^2}{64}, \quad M_{xy1} = \frac{q_0 a^2 b^2}{1536}$$

PROPRIETARY MATERIAL. ©The McGraw-Hill Companies, Inc. All rights reserved.

Solution to Problem 12.5: The boundary conditions on the primary variables are

$$w_3 = w_6 = w_9 = 0, \quad \theta_{y1} = \theta_{y2} = \theta_{y3} = 0, \quad \theta_{x7} = \theta_{y8} = \theta_{y9} = 0$$

The tangential moment $M_{r\theta} = 0$ can be prescribed only as a multipoint constraint (between M_n and M_s).

The specified forces in SDT are

$$F_1 = \frac{Q_0 L_{14}}{2}, \quad F_4 = \frac{Q_0 L_{14}}{2} + \frac{Q_0 L_{47}}{2}, \quad F_7 = \frac{Q_0 L_{47}}{2}$$

where L_{ij} denote the distance between node i and node j of the mesh. The loads for the CPT(N) can be computed using the load vector of the Euler–Bernoulli beam element, where L_{ij} replaces the element length.

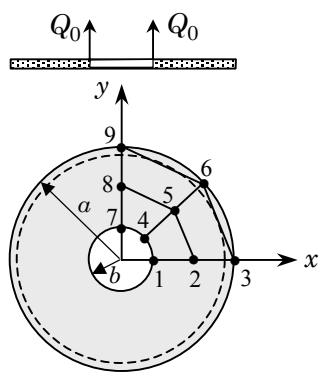

Simply supported at $r = a$
and under line load at $r = b$

Figure P12.5

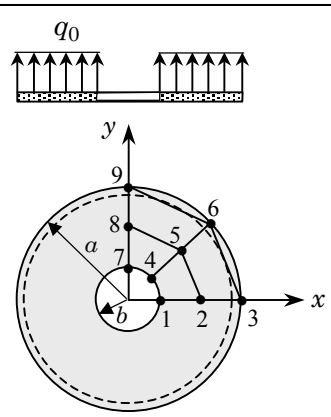

Simply supported at $r = a$
and under uniform load

Figure P12.6

PROPRIETARY MATERIAL. © The McGraw-Hill Companies, Inc. All rights reserved.

Solution to Problem 12.6: The boundary conditions on the primary variables are (same as in Problem 12.5)

$$w_3 = w_6 = w_9 = 0, \quad \theta_{y1} = \theta_{y2} = \theta_{y3} = 0, \quad \theta_{x7} = \theta_{y8} = \theta_{y9} = 0$$

The tangential moment $M_{r\theta} = 0$ can be prescribed only as multipoint constraints (between M_n and M_s).

The specified forces in SDT are

$$F_1 = \frac{q_0 A_1}{4}, \quad F_2 = \frac{q_0 A_1}{4} + \frac{q_0 A_2}{4}, \quad F_3 = \frac{q_0 A_2}{4}, \quad F_5 = \frac{q_0(A_1 + A_2 + A_3 + A_4)}{4}$$

and so on. Here A_i denote the areas of the quadrilateral elements. The loads for the CPT(N) can be computed using the load vector definition and they must be evaluated only numerically.

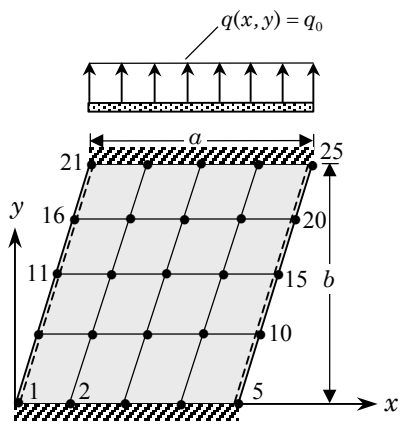

Simply supported along the slant edge
and under uniform load

Figure P12.7

Solution to Problem 12.7: The boundary conditions on the primary variables are

$$w_i = \theta_{xi} = \theta_{yi} = 0, \quad \text{for} \quad i = 1, 2, \ldots, 5 \quad \text{and} \quad i = 21, 22, \ldots, 25$$

The tangential moment $M_{ns} = 0$ along the slant edges can be prescribed only as multipoint constraints.

The specified forces in SDT can be obatined by first noting that

$$q_i^e = \frac{q_0 A_i}{4}, \quad \text{where } A_i \text{ is the areaf the } i\text{th element}$$

PROPRIETARY MATERIAL. ©The McGraw-Hill Companies, Inc. All rights reserved.

Then the forces can be easily obtained by inspection of the mesh; for example, we have

$$F_1 = q_1^1, \quad F_2 = q_2^1 + q_1^2, \quad F_7 = q_3^1 + q_4^2 + q_2^5 + q_1^6$$

and so on. The loads for the CPT(N) can be computed using the load vector definition and they must be evaluated only numerically.

Solution to Problem 12.8: The boundary conditions on the primary variables are

$$w_i = \theta_{xi} = \theta_{yi} = 0, \quad \text{for } i = 3, 6, 9; \quad \theta_{y1} = \theta_{y2} = 0$$
$$\theta_{x1} = \theta_{x4} = \theta_{x7} = \theta_{x8} = 0; \quad w_7 = w_8 = 0$$

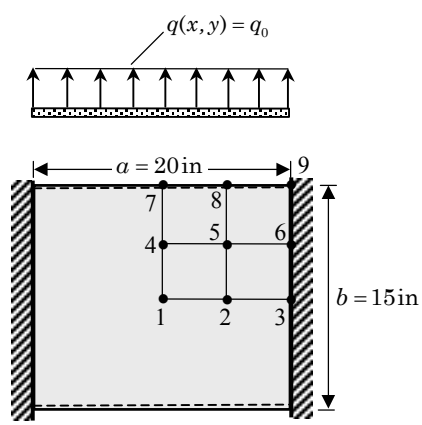

$E_1 = 30 \times 10^6$ psi, $E_2 = 0.75 \times 10^6$ psi,
$\nu_{12} = 0.25, G_{12} = 0.375 \times 10^6$ psi
$h = 2$ in, $q_0 = 100$ lb/in

Figure P12.8

The specified forces at the nodes in CPT(N) can be determined as in Problem 12.2. For SDT, they are

$$F_1 = \frac{q_0 h_x h_y}{4}, \quad F_2 = \frac{q_0 h_x h_y}{2}, \quad F_4 = \frac{q_0 h_x h_y}{2}, \quad F_1 = q_0 h_x h_y$$

where $h_x = 5$ in. and $h_y = 3.75$ in.

PROPRIETARY MATERIAL. ©The McGraw-Hill Companies, Inc. All rights reserved.

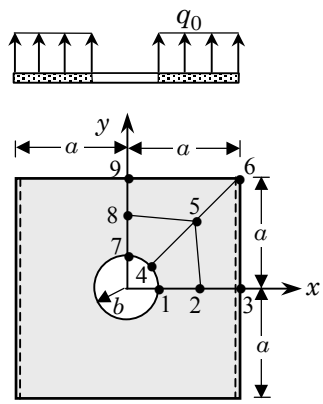

Simply supported at $y = \pm a/2$
and under uniform load

Figure P12.9

Solution to Problem 12.10: The boundary conditions on the primary variables are

$$w_i = \theta_{xi} = \theta_{yi} = 0, \quad \text{for } i = 1, 7, 14, 21$$
$$\theta_{y1} = \theta_{y2} = \theta_{y3} = \theta_{y4} = \theta_{y5} = \theta_{y6} = 0$$

The specified forces at the nodes in SDT and CPT(N) can be determined as in Problem 12.8.

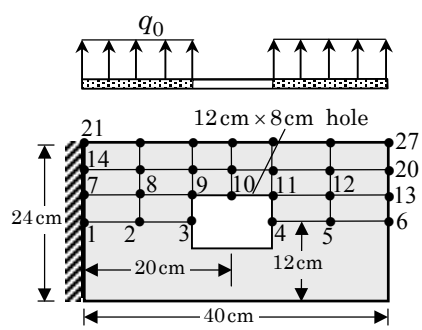

Under uniform load
$E = 200$ GPa, $\nu = 0.3$
$h = 1$ cm, $q_0 = 60$ kN/m^2

Figure P12.10

PROPRIETARY MATERIAL. © The McGraw-Hill Companies, Inc. All rights reserved.

PROPRIETARY AND CONFIDENTIAL

This Manual is the proprietary property of The McGraw-Hill Companies, Inc. ("McGraw-Hill") and protected by copyright and other state and federal laws. By opening and using this Manual the user agrees to the following restrictions, and if the recipient does not agree to these restrictions, the Manual should be promptly returned unopened to McGraw-Hill: **This Manual is being provided only to authorized professors and instructors for use in preparing for the classes using the affiliated textbook. No other use or distribution of this Manual is permitted. This Manual may not be sold and may not be distributed to or used by any student or other third party. No part of this Manual may be reproduced, displayed or distributed in any form or by any means, electronic or otherwise, without the prior written permission of the McGraw-Hill.**

Chapter 13

COMPUTER IMPLEMENTATION OF TWO-DIMENSIONAL PROBLEMS

Note that most of the problems may be analyzed using FEM2D. The results obtained from the program should be evaluated for their accuracy in the light of analytical solutions for qualitative understanding of the solution of the problem. New problems can be generated from those given here by changing the problem data, mesh, type of element, etc. For time-dependent problems, the time step and number of time steps should be chosen such that the solution pattern is established or a steady state is reached. When specific material properties are not given, use values such that the solution can be interpreted as the nondimensional solution of the problem.

Additional Note: Solutions to only selected problems are included here for two reasons: (1) it will take lot of space to include the computer input data and output files for each of the problem; (2) many problems are similar and there is only a change of data.

Problems 13.1 and 13.2: Investigate the convergence of solutions to Problem 8.18 using 2×2, 4×4, and 8×8 meshes of linear triangular elements, and compare the results (in graphical or tabular form) with the analytical solution.

Solution: Input file for the 8×8 mesh of triangles is presented in Box 13.1 and the results are summarized in Table 13.1.

Table 13.1: Comparison of the finite element solutions $u(0, y)$ with the analytical solution.

	Triangular elem.			Rectangular elem.			Analytical
y	Mesh T2	Mesh T4	Mesh T8	Mesh R2	Mesh R4	Mesh R8	Solution
0.125	−−	−−	0.0355	−−	−−	0.0343	0.0351
0.250	−−	0.0797	0.0764	−−	0.0703	0.0740	0.0757
0.375	−−	−−	0.1291	−−	−−	0.1255	0.1280
0.500	0.2303	0.2080	0.2015	0.1520	0.1895	0.1969	0.2002
0.625	−−	−−	0.3050	−−	−−	0.2996	0.3034
0.750	−−	0.4630	0.4554	−−	0.4410	0.4499	0.4538
0.875	−−	−−	0.6758	−−	−−	0.6716	0.6746

PROPRIETARY MATERIAL. ©The McGraw-Hill Companies, Inc. All rights reserved.

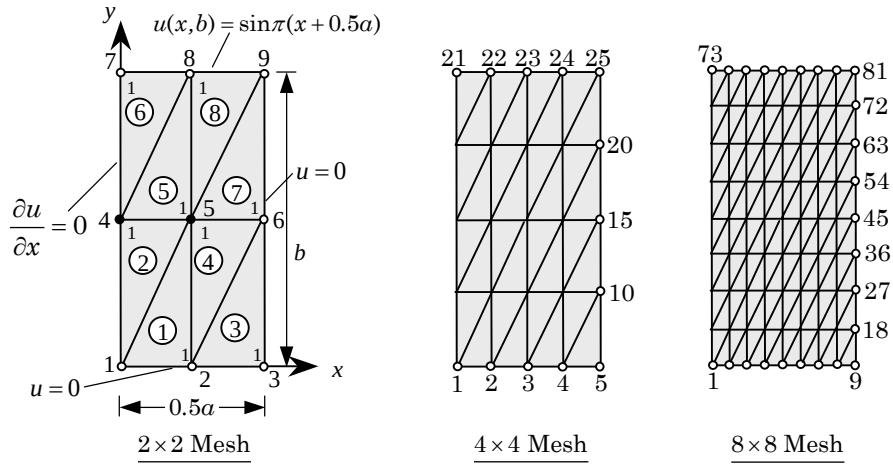

Box 13.1: Input data for program FEM2D (shown only for 8 × 8 mesh of triangles).

```
Prob 13.1:  Laplace equation on a square (Problem 8.18: 8 by 8 mesh)
   0   2   0   0                                ITYPE,IGRAD,ITEM,NEIGN
   0   3   1   0                                IELTYP,NPE,MESH,NPRNT
   8   8                                        NX,NY
   0.0  0.0625 0.0625 0.0625 0.0625
        0.0625 0.0625 0.0625 0.0625             X0,DX(I)
   0.0  0.125  0.125  0.125  0.125
        0.125  0.125  0.125  0.125              Y0,DY(I)
   25                                           NSPV
   1 1     2 1     3 1     4 1     5 1     6 1     7 1
   8 1     9 1    18 1    27 1    36 1    45 1    54 1
  63 1    72 1    73 1    74 1    75 1    76 1    77 1
  78 1    79 1    80 1    81 1                  ISPV(I,J)
   0.0     0.0     0.0     0.0     0.0     0.0     0.0
   0.0     0.0     0.0     0.0     0.0     0.0     0.0
   0.0     0.0     1.0   0.98079 0.92388 0.83147 0.7071
 0.55557 0.38268 0.19510   0.0                   VSPV(I)
   0                                            NSSV
   1.0   0.0  0.0                               A10, A1X, A1Y
   1.0   0.0  0.0                               A20, A2X, A2Y
   0.0                                          A00
   0                                            ICONV
   0.0  0.0  0.0                                F0,  FX,  FY
```

It is clear that meshes of triangular elements give more accurate results for the number of nodes. This is due to the fact that there are two triangles per a rectangle, thereby provides greater flexibility in approximating the solution. Also, note that the solution predicted by triangles converges from the top while that provided by the rectangular elements converges from the bottom. This means that the triangle underestimates the "stiffness" while the rectangular element overestimates it.

PROPRIETARY MATERIAL. ©The McGraw-Hill Companies, Inc. All rights reserved.

Problem 13.5: Investigate the convergence of the solution to Problem 8.23 using 2×2, 4×4, and 8×8 meshes of linear triangular elements and equivalent meshes of quadratic triangular elements.

Solution: If FEM2D is to generate the mesh, we must use the total domain. If the mesh can be read in, then one can exploit the diagonal symmetry of the problem. Here we use the option to generate the mesh by the program FEM2D. The input data and partial output for 4×4 mesh of quadratic triangular elements is presented in Box 13.5.

Box 13.5: Input data and partial output for program FEM2D (shown only for 4×4 mesh of quadratic triangles).

```
Prob. 13.5 Laplace equation on a square (Problem 8.18: 4 by 4 T6 mesh)
 0   2   0   0                                ITYPE,IGRAD,ITEM,NEIGN
 0   6   1   0                                IELTYP,NPE,MESH,NPRNT
 4   4                                        NX,NY
 0.0  0.25  0.25  0.25  0.25                  X0,DX(I)
 0.0  0.25  0.25  0.25  0.25                  Y0,DY(I)
 32                                           NSPV
 1 1     2 1     3 1     4 1     5 1     6 1     7 1
 8 1     9 1    10 1    18 1    19 1    27 1    28 1
36 1    37 1    45 1    46 1    54 1    55 1    63 1
64 1    72 1    73 1    74 1    75 1    76 1    77 1
78 1    79 1    80 1    81 1                  ISPV(I,J)
 0.0      0.015625 0.0625  0.140625 0.25   0.390625
 0.5625   0.765625 1.0     0.015625 0.875  0.0625
 0.75     0.140625 0.625   0.25     0.5    0.390625
 0.375    0.5625   0.25    0.765625 0.125  1.0
 0.875    0.75     0.625   0.5      0.375  0.25
 0.125    0.0                                 VSPV(I)
 0                                            NSSV
 1.0   0.0  0.0                               A10, A1X, A1Y
 1.0   0.0  0.0                               A20, A2X, A2Y
 0.0                                          A00
 0                                            ICONV
 2.0   0.0  0.0                               F0,  FX,  FY
```

Node	x	y	$u(x,y)$
11	0.12500E+00	0.12500E+00	0.11449E+00
12	0.25000E+00	0.12500E+00	0.19773E+00
13	0.37500E+00	0.12500E+00	0.28288E+00
14	0.50000E+00	0.12500E+00	0.37869E+00
15	0.62500E+00	0.12500E+00	0.48802E+00
16	0.75000E+00	0.12500E+00	0.61111E+00
17	0.87500E+00	0.12500E+00	0.74359E+00

PROPRIETARY MATERIAL. ©The McGraw-Hill Companies, Inc. All rights reserved.

Problem 13.6: Repeat Problem 13.5 using rectangular elements.

Solution: The input data and partial output for 4×4 mesh of quadratic rectagular elements is presented in Box 13.6.

Box 13.6: Input data and partial output for program FEM2D (shown only for 4×4 mesh of quadratic rectangles).

```
Prob. 13.6 Laplace equation on a square (Problem 8.18: 4 by 4 Q9 mesh)
 0   2   0   0                                  ITYPE,IGRAD,ITEM,NEIGN
 2   9   1   0                                  IELTYP,NPE,MESH,NPRNT
 4   4                                          NX,NY
 0.0  0.25  0.25  0.25  0.25                    X0,DX(I)
 0.0  0.25  0.25  0.25  0.25                    Y0,DY(I)
 32                                             NSPV
 1 1     2 1     3 1     4 1     5 1     6 1     7 1
 8 1     9 1    10 1    18 1    19 1    27 1    28 1
36 1    37 1    45 1    46 1    54 1    55 1    63 1
64 1    72 1    73 1    74 1    75 1    76 1    77 1
78 1    79 1    80 1    81 1                    ISPV(I,J)
 0.0      0.015625 0.0625  0.140625 0.25   0.390625
 0.5625   0.765625 1.0     0.015625 0.875  0.0625
 0.75     0.140625 0.625   0.25     0.5    0.390625
 0.375    0.5625   0.25    0.765625 0.125  1.0
 0.875    0.75     0.625   0.5      0.375  0.25
 0.125    0.0                                   VSPV(I)
 0                                              NSSV
 1.0   0.0  0.0                                 A10, A1X, A1Y
 1.0   0.0  0.0                                 A20, A2X, A2Y
 0.0                                            A00
 0                                              ICONV
 2.0   0.0  0.0                                 F0,  FX,  FY
```

Node	x	y	$u(x,y)$
11	0.12500E+00	0.12500E+00	0.11646E+00
12	0.25000E+00	0.12500E+00	0.19820E+00
13	0.37500E+00	0.12500E+00	0.28335E+00
14	0.50000E+00	0.12500E+00	0.37888E+00
15	0.62500E+00	0.12500E+00	0.48838E+00
16	0.75000E+00	0.12500E+00	0.61144E+00
17	0.87500E+00	0.12500E+00	0.74492E+00
20	0.12500E+00	0.25000E+00	0.19820E+00
21	0.25000E+00	0.25000E+00	0.29914E+00
22	0.37500E+00	0.25000E+00	0.38343E+00
23	0.50000E+00	0.25000E+00	0.46224E+00
24	0.62500E+00	0.25000E+00	0.54055E+00
25	0.75000E+00	0.25000E+00	0.61861E+00
26	0.87500E+00	0.25000E+00	0.69170E+00

PROPRIETARY MATERIAL. ©The McGraw-Hill Companies, Inc. All rights reserved.

Problem 13.7: Analyze the axisymmetric problem in Problem 8.26 using 4×1 and 8×1 linear rectangular elements, and compare the solution with the exact solution.

Solution: The input data and partial output for the two meshes are presented in Boxes 13.7(a) and 13.7(b). The exact solution is in the solution to Problem 8.26. The exact values at $r = 0.0, 0.005, 0.01, 0.015$, and 0.02 are $T_1 = 150.0$, $T_2 = 146.875$, $T_3 = 137.50$, and $T_4 = 121.875$.

Box 13.7(a): Input data and partial output for program FEM2D for 4×1 mesh of rectangles.

```
Prob 13.7:  An axisymmetric problem (4x1 mesh of rectangles)
   0   2   0   0                        ITYPE,IGRAD,ITEM,NEIGN
   1   4   1   1                        IELTYP,NPE,MESH,NPRNT
   4   1                                NX, NY
   0.0  0.005  0.005  0.005  0.005      X0, DX(I)
   0.0  1.0                             Y0, DY(1)
   2                                    NSPV
   5 1    10 1                          ISPV(I,J)
   100.0  100.0                         VSPV(I)
   0                                    NSSV
   0.0   20.0  0.0                      A10, A1X, A1Y
   0.0   20.0  0.0                      A20, A2X, A2Y
   0.0                                  A00
   0                                    ICONV
   0.0  1.0E07  0.0                     F0,  FX,  FY
```

Node	x-coord.	y-coord.	Primary DOF
1	0.00000E+00	0.00000E+00	0.15175E+03
2	0.50000E-02	0.00000E+00	0.14758E+03
3	0.10000E-01	0.00000E+00	0.13786E+03
4	0.15000E-01	0.00000E+00	0.12202E+03
5	0.20000E-01	0.00000E+00	0.10000E+03
6	0.00000E+00	0.10000E+01	0.15175E+03
7	0.50000E-02	0.10000E+01	0.14758E+03
8	0.10000E-01	0.10000E+01	0.13786E+03
9	0.15000E-01	0.10000E+01	0.12202E+03
10	0.20000E-01	0.10000E+01	0.10000E+03

PROPRIETARY MATERIAL. ©The McGraw-Hill Companies, Inc. All rights reserved.

Box 13.7(b): Input data and partial output for program FEM2D for 8×1 mesh of rectangles.

```
Prob 13.7:  An axisymmetric problem (8x1 mesh of rectangles)
0   2   0   0                          ITYPE,IGRAD,ITEM,NEIGN
1   4   1   2                          IELTYP,NPE,MESH,NPRNT
8   1                                  NX, NY
0.0  0.0025  0.0025  0.0025  0.0025
     0.0025  0.0025  0.0025  0.0025   X0, DX(I)
0.0  1.0                               Y0, DY(1)
2                                      NSPV
9 1    18 1                            ISPV(I,J)
100.0  100.0                           VSPV(I)
0                                      NSSV
0.0   20.0  0.0                        A10, A1X, A1Y
0.0   20.0  0.0                        A20, A2X, A2Y
0.0                                    A00
0                                      ICONV
0.0  1.0E07  0.0                       F0,  FX,  FY
```

Node	x-coord.	y-coord.	Primary DOF
1	0.00000E+00	0.00000E+00	0.15053E+03
2	0.25000E-02	0.00000E+00	0.14948E+03
3	0.50000E-02	0.00000E+00	0.14705E+03
4	0.75000E-02	0.00000E+00	0.14310E+03
5	0.10000E-01	0.00000E+00	0.13759E+03
6	0.12500E-01	0.00000E+00	0.13053E+03
7	0.15000E-01	0.00000E+00	0.12191E+03
8	0.17500E-01	0.00000E+00	0.11174E+03
9	0.20000E-01	0.00000E+00	0.10000E+03
10	0.00000E+00	0.10000E+01	0.15053E+03
11	0.25000E-02	0.10000E+01	0.14948E+03
12	0.50000E-02	0.10000E+01	0.14705E+03
13	0.75000E-02	0.10000E+01	0.14310E+03
14	0.10000E-01	0.10000E+01	0.13759E+03
15	0.12500E-01	0.10000E+01	0.13053E+03
16	0.15000E-01	0.10000E+01	0.12191E+03
17	0.17500E-01	0.10000E+01	0.11174E+03
18	0.20000E-01	0.10000E+01	0.10000E+03

PROPRIETARY MATERIAL. ©The McGraw-Hill Companies, Inc. All rights reserved.

Problem 13.9: Analyze Problem 8.18 for eigenvalues (take $c = 1.0$), using a 4×4 uniform mesh of triangular elements. Calculate the critical time step for a parabolic equation.

Solution: The input data file and edited output for the problem are presented in Box 13.9. The critical time step is $\Delta t_{\text{cr}} = 2/920.9 = 2.172 \times 10^{-3}$.

Box 13.9: Input data and edited output for 4×4 mesh of triangles (eigenvalue problem).

```
Prob 13.9:  Eigenvalues of a Laplace equation (4by4 T3 mesh)
    0   2   1   1                        ITYPE,IGRAD,ITEM,NEIGN
    12  1                                NVALU, NVCTR
    0   3   1   0                        IELTYP,NPE,MESH,NPRNT
    4   4                                NX,NY
    0.0  0.125 0.125 0.125 0.125         X0,DX(I)
    0.0  0.25  0.25  0.25  0.25          Y0,DY(I)
    13                                   NSPV
    1 1  2 1  3 1   4 1  5 1  10 1  15 1
   20 1 21 1 22 1  23 1 24 1  25 1       ISPV(I,J)
    1.0   0.0  0.0                       A10, A1X, A1Y
    1.0   0.0  0.0                       A20, A2X, A2Y
    0.0                                  A00
    0                                    ICONV
    1.0  0.0  0.0                        C0,  CX,  CY

    S O L U T I O N :
        Number of Jacobi iterations ..... NROT = 217
        E I G E N V A L U E (  1) =   0.920904E+03
        E I G E N V A L U E (  2) =   0.869250E+03
        E I G E N V A L U E (  3) =   0.742104E+03
        E I G E N V A L U E (  4) =   0.626822E+03
        E I G E N V A L U E (  5) =   0.496488E+03
        E I G E N V A L U E (  6) =   0.372089E+03
        E I G E N V A L U E (  7) =   0.323778E+03
        E I G E N V A L U E (  8) =   0.198632E+03
        E I G E N V A L U E (  9) =   0.147678E+03
        E I G E N V A L U E ( 10) =   0.122005E+03
        E I G E N V A L U E ( 11) =   0.634863E+02
        E I G E N V A L U E ( 12) =   0.216955E+02
        E I G E N V E C T O R :
0.21660E+01  0.19704E+01  0.14881E+01  0.79420E+00  0.30128E+01
0.27839E+01  0.21305E+01  0.11526E+01  0.20937E+01  0.19650E+01
0.15239E+01  0.83579E+00
```

PROPRIETARY MATERIAL. ©The McGraw-Hill Companies, Inc. All rights reserved.

Problem 13.10: Analyze Problem 8.18 using a 4×4 mesh of triangles for transient response. Assume zero initial conditions. Use $\alpha = 0.5$ and $\Delta t = 0.001$. Investigate the stability of the solution when $\alpha = 0.0$ and $\Delta t = 0.0025$. The number of time steps should be such that the solution reaches its peak value or a steady state.

Solution: From Problem 13.9, it is clear that for 4×4 mesh of linear triangles, the critical time step for conditionally stable schemes is $\Delta t_{\text{cr}} = 0.00217$. So, we may wish to investigate the instability of the forward difference scheme ($\alpha = 0$) using $\Delta t = 0.0025$. The results of the forward difference scheme and Crank-Nicolson scheme are included in Figs. 13.10(a) and 13.10(b).

(a)

(b)

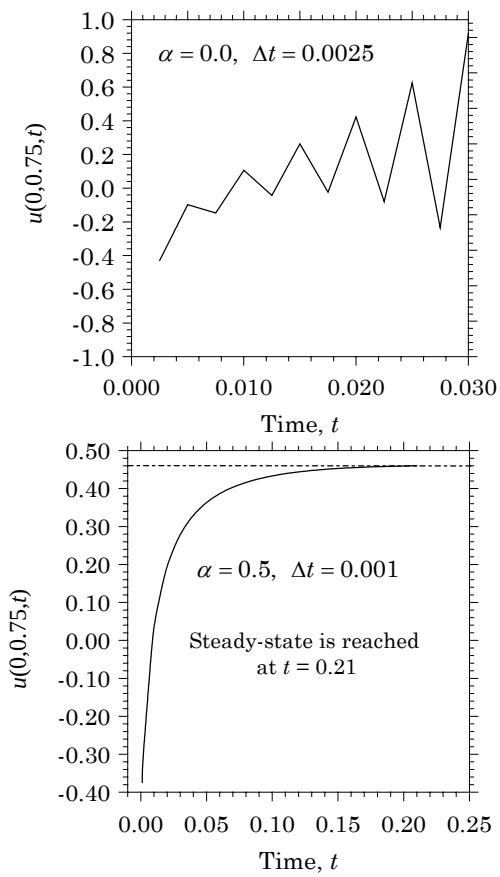

Fig. 13.10: (a) Transient response showing instability of the forward difference scheme. (b) Transient response reaching steady state with Crank-Nicolson scheme.

PROPRIETARY MATERIAL. ©The McGraw-Hill Companies, Inc. All rights reserved.

Problem 13.13: Analyze the heat transfer problem in Problem 8.28 using an 8×16 mesh of linear triangular elements and an equivalent mesh of linear rectangular elements.

Solution: Using the symmetry considerations, we model the 2×8 cm domain with 8×16 mesh of linear triangles as well as rectangles. The problem has no specified primary variables, one nonzero specified secondary variable at node 117 of heat $Q_{117} = 125$ W, and eight elements at the top row have convection boundary. The input files and modified outputs are presented in Boxes 13.13a and 13.13b.

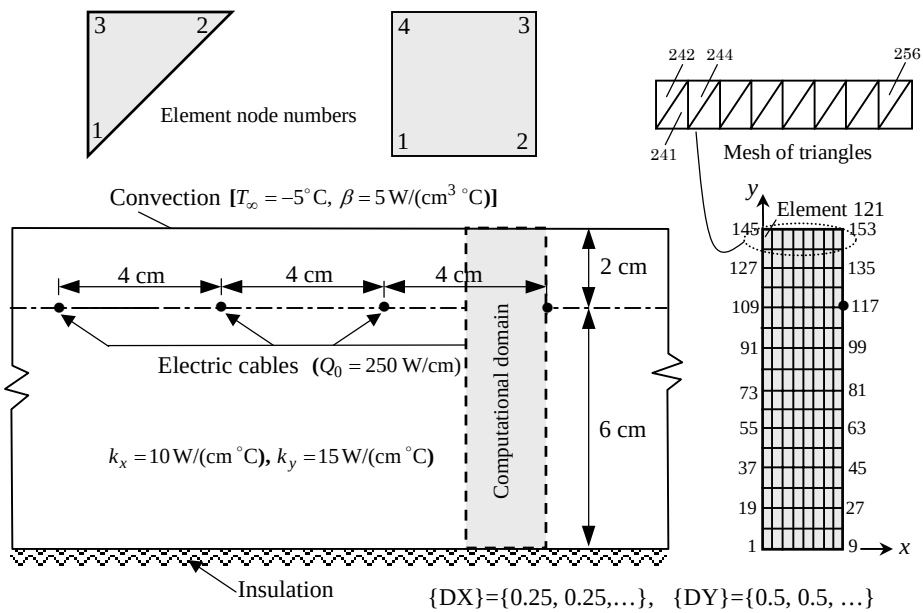

Box 13.13a: Input data and edited output for 8×16 mesh of triangles.

```
 Prob 8.28:  Heat transfer in a medium with cables (triangles)
 0   2   0   0                                ITYPE,IGRAD,ITEM,NEIGN
 0   3   1   0                                IELTYP,NPE,MESH,NPRNT
 8  16                                        NX, NY
 0.0  0.25 0.25 0.25 0.25 0.25 0.25
      0.25 0.25                                X0, DX(I)
 0.0  0.5  0.5  0.5  0.5  0.5  0.5  0.5  0.5
      0.5  0.5  0.5  0.5  0.5  0.5  0.5  0.5  Y0, DY(I)
 0                                             NSPV
 1                                             NSSV
 117  1                                        ISSV(1,1), ISSV(1,2)
125.0                                          VSSV(1)
 10.0   0.0  0.0                               A10, A1X, A1Y
 15.0   0.0  0.0                               A20, A2X, A2Y
 0.0                                           A00
```

PROPRIETARY MATERIAL. ©The McGraw-Hill Companies, Inc. All rights reserved.

(Table 13.13a continued from the previous page)

```
1                                                ICONV
8                                                NBE
242  2  3  5.0  -5.0
244  2  3  5.0  -5.0
246  2  3  5.0  -5.0
248  2  3  5.0  -5.0
250  2  3  5.0  -5.0
252  2  3  5.0  -5.0
254  2  3  5.0  -5.0
256  2  3  5.0  -5.0                            IBE, INOD, BETA, TINF
0.0  0.0   0.0                                  F0,  FX,  FY
```

Node	x-coord.	y-coord.	Primary DOF
1	0.00000E+00	0.00000E+00	0.15830E+02
9	0.20000E+01	0.00000E+00	0.15837E+02
18	0.20000E+01	0.50000E+00	0.15837E+02
90	0.20000E+01	0.45000E+01	0.16361E+02
117	0.20000E+01	0.60000E+01	0.23163E+02
126	0.20000E+01	0.65000E+01	0.16247E+02
145	0.00000E+00	0.80000E+01	0.71123E+01
153	0.20000E+01	0.80000E+01	0.79344E+01

.

Box 13.13b: Partial input data and edited output for 8×16 mesh of rectangles.

```
Prob 8.28:  Heat transfer in a medium with cables (rectangles)
0   2   0   0                                   ITYPE,IGRAD,ITEM,NEIGN
1   4   1   0                                   IELTYP,NPE,MESH,NPRNT
8  16                                            NX, NY
. . . . . . . . . . .
1                                                ICONV
8                                                NBE
121  4  3  5.0  -5.0
122  4  3  5.0  -5.0
123  4  3  5.0  -5.0
124  4  3  5.0  -5.0
125  4  3  5.0  -5.0
126  4  3  5.0  -5.0
127  4  3  5.0  -5.0
128  4  3  5.0  -5.0                            IBE, INOD, BETA, TINF
0.0  0.0   0.0                                  F0,  FX,  FY
```

Node	x-coord.	y-coord.	Primary DOF
1	0.00000E+00	0.00000E+00	0.15831E+02
9	0.20000E+01	0.00000E+00	0.15836E+02
18	0.20000E+01	0.50000E+00	0.15836E+02
90	0.20000E+01	0.45000E+01	0.16301E+02
117	0.20000E+01	0.60000E+01	0.24932E+02
126	0.20000E+01	0.65000E+01	0.15532E+02
145	0.00000E+00	0.80000E+01	0.71346E+01
153	0.20000E+01	0.80000E+01	0.78876E+01

PROPRIETARY MATERIAL. ©The McGraw-Hill Companies, Inc. All rights reserved.

Problem 13.15: Analyze Problem 8.30 for nodal temperatures and heat flow across the boundaries. Use the following data: $k = 30$ W/(m °C), $\beta = 60$ W/(m^2 ° C), $T_\infty = 0$°C, $T_0 = 100$°C, $q_0 = 2 \times 10^5$ W/m^2, $g_0 = 10^7$ W/m ^{3}, and $a = 1$ cm.

Solution: The input data and partial output are included in Box 13.15.

Box 13.15: Input data and edited output for Prob. 8.30.

```
 Prob 8.30:  Heat transfer in a square region (rectangles)
 0   2   0   0                    ITYPE,IGRAD,ITEM,NEIGN
 1   4   1   2                    IELTYP,NPE,MESH,NPRNT
 2   2                            NX, NY
 0.0  0.01  0.01                  X0, DX(I)
 0.0  0.01  0.01                  Y0, DY(I)
 3                                NSPV
 3 1   6 1   9 1                  ISPV(I,J)
100.0 100.0 100.0                 VSPV(I)
 3                                NSSV
 1 1   4 1   7 1                  ISSV(I,J)
1.0E3  2.0E3 1.0E3                VSSV(I)
 30.0   0.0  0.0                  A10, A1X, A1Y
 30.0   0.0  0.0                  A20, A2X, A2Y
 0.0                              A00
 1                                ICONV
 2                                NBE
 3  3  4  60.0  0.0
 4  3  4  60.0  0.0               IBE, INOD, BETA, TINF
1.0E07  0.0  0.0                  F0,  FX,  FY
```

Node	x-coord.	y-coord.	Primary DOF
1	0.00000E+00	0.00000E+00	0.29706E+03
2	0.10000E-01	0.00000E+00	0.21458E+03
3	0.20000E-01	0.00000E+00	0.10000E+03
4	0.00000E+00	0.10000E-01	0.29598E+03
5	0.10000E-01	0.10000E-01	0.21383E+03
6	0.20000E-01	0.10000E-01	0.10000E+03
7	0.00000E+00	0.20000E-01	0.29215E+03
8	0.10000E-01	0.20000E-01	0.21088E+03
9	0.20000E-01	0.20000E-01	0.10000E+03

x-coord.	y-coord.	a22(du/dy)	-a11(du/dx)	Flux Mgntd	Orientation
0.5000E-02	0.5000E-02	-0.2749E+04	0.2469E+06	0.2469E+06	90.64
0.1500E-01	0.5000E-02	-0.1128E+04	0.3426E+06	0.3426E+06	90.19
0.5000E-02	0.1500E-01	-0.1016E+05	0.2451E+06	0.2453E+06	92.37
0.1500E-01	0.1500E-01	-0.4424E+04	0.3371E+06	0.3371E+06	90.75

PROPRIETARY MATERIAL. ©The McGraw-Hill Companies, Inc. All rights reserved.

Problem 13.17: Analyze Problem 8.35 for nodal temperature and heat flows across the boundary . Take $k = 5$ W/(m °C).

Solution: The input data and partial output are included in Box 13.17.

Box 13.17: Input data and edited output for Prob. 8.35.

```
Prob 8.35:  Heat transfer in a square region (rectangles)
   0   2   0   0                    ITYPE,IGRAD,ITEM,NEIGN
   1   4   1   2                    IELTYP,NPE,MESH,NPRNT
   4   2                            NX, NY
   0.0  0.02  0.02  0.02  0.02      X0, DX(I)
   0.0  0.01  0.01                  Y0, DY(I)
   3                                NSPV
   1 1   6 1   11 1                 ISPV(I,J)
  300.0 300.0 300.0                 VSPV(I)
   0                                NSSV
   5.0   0.0  0.0                   A10, A1X, A1Y
   5.0   0.0  0.0                   A20, A2X, A2Y
   0.0                              A00
   1                                ICONV
   10                               NBE
   1  1  2  40.0  20.0
   2  1  2  40.0  20.0
   3  1  2  40.0  20.0
   4  1  2  40.0  20.0
   4  2  3  40.0  20.0
   5  3  4  40.0  20.0
   6  3  4  40.0  20.0
   7  3  4  40.0  20.0
   8  3  4  40.0  20.0
   8  3  4  40.0  20.0              IBE, INOD, BETA, TINF
   0.0  0.0  0.0                    F0,  FX,  FY
```

Node	x-coord.	y-coord.	Primary DOF
1	0.00000E+00	0.00000E+00	0.30000E+03
2	0.20000E-01	0.00000E+00	0.17544E+03
3	0.40000E-01	0.00000E+00	0.11089E+03
4	0.60000E-01	0.00000E+00	0.75481E+02
5	0.80000E-01	0.00000E+00	0.61251E+02
6	0.00000E+00	0.10000E-01	0.30000E+03
7	0.20000E-01	0.10000E-01	0.18415E+03
8	0.40000E-01	0.10000E-01	0.11403E+03
9	0.60000E-01	0.10000E-01	0.77269E+02
10	0.80000E-01	0.10000E-01	0.63053E+02
11	0.00000E+00	0.20000E-01	0.30000E+03
12	0.20000E-01	0.20000E-01	0.17542E+03
13	0.40000E-01	0.20000E-01	0.11112E+03
14	0.60000E-01	0.20000E-01	0.73434E+02
15	0.80000E-01	0.20000E-01	0.59596E+02

PROPRIETARY MATERIAL. ©The McGraw-Hill Companies, Inc. All rights reserved.

Problem 13.18: Consider heat transfer in a rectangular domain with a central heated circular cylinder (see Fig. P13.19 for the geometry). Analyze the problem using the mesh of linear quadrilateral elements shown in Fig. 13.4.2(b).

Solution: The input data and partial output are included in Box 13.18.

Box 13.18: Input data and edited output for Problem 13.18.

```
Problem 13.18: Heat transfer from a circular cylinder
   0   2   0   0                                ITYPE,IGRAD,ITEM,NEIGN
   1   4   2   0                                IELTYP,NPE,MESH,NPRNT
  16  25                                        NEM, NNM
   5                                            NRECL
   1   5  1  0.0  0.0   0.03       0.0       6.0  NOD1,NODL,NODINC, ...
   6  10  1  0.0  0.01  0.0307612  0.0038268 6.0
  11  15  1  0.0  0.02  0.0329289  0.007071  6.0
  16  20  1  0.02 0.02  0.0361732  0.0092388 6.0
  21  25  1  0.04 0.02  0.04       0.01      6.0
   4                                            NRECEL
   1    4    1    1    4      1  2   7   6      NEL1,NELL,IELINC, NODINC
   5    8    1    1    4      6  7  12  11
   9   12    1    1    4     11 12  17  16
  13   16    1    1    4     16 17  22  21
   3                                            NSPV
   1 1     6 1     11 1                         ISPV(I,J)
   300.0  300.0   300.0                         VSPV(I)
   0                                            NSSV
   10.0  0.0  0.0                               A10, A1X, A1Y
   10.0  0.0  0.0                               A20, A2X, A2Y
   0.0                                          A00
   1                                            ICONV
   4                                            NBE
   4   2  3  40.0  20.0
   8   2  3  40.0  20.0
  12   2  3  40.0  20.0
  16   2  3  40.0  20.0                         IBE, INOD, BETA, TINF
   0.0  0.0  0.0                               F0,  FX,  FY
```

Node	x-coord.	y-coord.	Primary DOF
2	0.12857E-01	0.00000E+00	0.28987E+03
3	0.22143E-01	0.00000E+00	0.28229E+03
4	0.27857E-01	0.00000E+00	0.27717E+03
5	0.30000E-01	0.00000E+00	0.27506E+03
8	0.22705E-01	0.54436E-02	0.28200E+03
9	0.28564E-01	0.42677E-02	0.27678E+03
10	0.30761E-01	0.38268E-02	0.27456E+03
15	0.32929E-01	0.70710E-02	0.27334E+03
20	0.36173E-01	0.92388E-02	0.27190E+03
21	0.40000E-01	0.20000E-01	0.27365E+03
22	0.40000E-01	0.15714E-01	0.27354E+03
23	0.40000E-01	0.12619E-01	0.27255E+03
24	0.40000E-01	0.10714E-01	0.27141E+03
25	0.40000E-01	0.10000E-01	0.27084E+03

PROPRIETARY MATERIAL. ©The McGraw-Hill Companies, Inc. All rights reserved.

Problem 13.19: Analyze the heat transfer problem in Fig. P8.31 with (a) 2×2 and (b) 4×4 meshes of linear rectangular elements.

Solution: The input data and partial output are included in Box 13.19.

Box 13.19: Input data and edited output for Problem 13.19.

```
 Prob 8.31:  Heat transfer in a square region (rectangles)
  0   2   0   0                                ITYPE,IGRAD,ITEM,NEIGN
  1   4   1   2                                IELTYP,NPE,MESH,NPRNT
  2   2                                        NX, NY
  0.0  0.15  0.15                              X0, DX(I)
  0.0  0.15  0.15                              Y0, DY(I)
  5                                            NSPV
  1 1   2 1   3 1   6 1   9 1                  ISPV(I,J)
 10.0  10.0   40.0  40.0  40.0                 VSPV(I)
  0                                            NSSV
  5.0   0.0  0.0                               A10, A1X, A1Y
  5.0   0.0  0.0                               A20, A2X, A2Y
  0.0                                          A00
  1                                            ICONV
  2                                            NBE
  1  1  4  28.0  0.0
  3  1  4  28.0  0.0                           IBE, INOD, BETA, TINF
  0.0  0.0  0.0                                F0,  FX,  FY
```

$k = 5\,\mathrm{W/(m\,^\circ C)},\ \beta = 28\,\mathrm{W/(m^2\,^\circ C)}$

$T_\infty = 0\,^\circ\mathrm{C},\ T_3 = T_6 = T_9 = 40\,^\circ\mathrm{C},$

$T_1 = T_2 = 10\,^\circ\mathrm{C},\ \ a = 0.15\,\mathrm{m}$

S O L U T I O N :

Node	x-coord.	y-coord.	Primary DOF
1	0.00000E+00	0.00000E+00	0.10000E+02
2	0.15000E+00	0.00000E+00	0.10000E+02
3	0.30000E+00	0.00000E+00	0.40000E+02
4	0.00000E+00	0.15000E+00	0.10681E+02
5	0.15000E+00	0.15000E+00	0.23618E+02
6	0.30000E+00	0.15000E+00	0.40000E+02
7	0.00000E+00	0.30000E+00	0.13055E+02
8	0.15000E+00	0.30000E+00	0.25207E+02
9	0.30000E+00	0.30000E+00	0.40000E+02

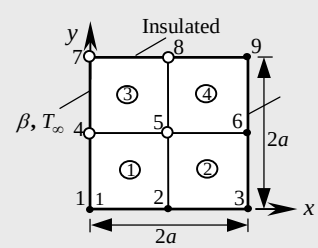

The orientation of gradient vector is measured fromthe positive x-axis

x-coord.	y-coord.	a22(du/dy)	-a11(du/dx)	Flux Mgntd	Orientation
0.7500E-01	0.7500E-01	0.2383E+03	-0.2156E+03	0.3214E+03	-42.14
0.2250E+00	0.7500E-01	0.2270E+03	-0.7730E+03	0.8057E+03	-73.64
0.7500E-01	0.2250E+00	0.6604E+02	-0.4181E+03	0.4233E+03	-81.02
0.2250E+00	0.2250E+00	0.2648E+02	-0.5196E+03	0.5203E+03	-87.08

PROPRIETARY MATERIAL. ©The McGraw-Hill Companies, Inc. All rights reserved.

Problem 13.21: Analyze the problem in Fig. P8.32 with (a) 3×3, and (b) 6×6 meshes of linear rectangular elements. Take $k = 10$ W/(m °C).

Solution: The input data and partial output are included in Box 13.21.

Box 13.21: Input data and edited output for Problem 13.21.

```
Prob 8.32:  Heat transfer in a square region (rectangles)
   0   2   0   0                          ITYPE,IGRAD,ITEM,NEIGN
   1   4   1   2                          IELTYP,NPE,MESH,NPRNT
   3   3                                  NX, NY
   0.0  0.333333  0.333333  0.333333      X0, DX(I)
   0.0  0.333333  0.333333  0.333333      Y0, DY(I)
   12                                     NSPV
   1 1   2 1   3 1   4 1   5 1   8 1
   9 1  12 1  13 1  14 1  15 1  16 1
  250.0 250.0 250.0 250.0 150.0 50.0
  150.0  50.0 150.0   0.0   0.0 50.0
   0
  10.0   0.0  0.0
  10.0   0.0  0.0
   0.0
   0
   0.0  0.0  0.0
```

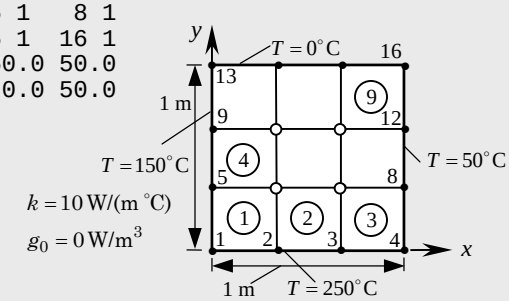

Node	x-coord.	y-coord.	Primary DOF
6	0.33333E+00	0.33333E+00	0.17222E+03
7	0.66667E+00	0.33333E+00	0.15000E+03
8	0.10000E+01	0.33333E+00	0.50000E+02
9	0.00000E+00	0.66667E+00	0.15000E+03
10	0.33333E+00	0.66667E+00	0.10556E+03
11	0.66667E+00	0.66667E+00	0.72222E+02
12	0.10000E+01	0.66667E+00	0.50000E+02
13	0.00000E+00	0.10000E+01	0.15000E+03
14	0.33333E+00	0.10000E+01	0.00000E+00
15	0.66667E+00	0.10000E+01	0.00000E+00
16	0.10000E+01	0.10000E+01	0.50000E+02

x-coord.	y-coord.	a22(du/dy)	-a11(du/dx)	Flux Mgntd	Orientation
0.1667E+00	0.1667E+00	-0.2667E+04	-0.3333E+03	0.2687E+04	-172.87
0.5000E+00	0.1667E+00	-0.2667E+04	0.3333E+03	0.2687E+04	172.87
0.8333E+00	0.1667E+00	-0.4500E+04	0.1500E+04	0.4743E+04	161.57
0.1667E+00	0.5000E+00	-0.1000E+04	0.3333E+03	0.1054E+04	161.57
0.5000E+00	0.5000E+00	-0.2167E+04	0.8333E+03	0.2321E+04	158.96
0.8333E+00	0.5000E+00	-0.1167E+04	0.1833E+04	0.2173E+04	122.47
0.1667E+00	0.8333E+00	-0.1583E+04	0.2917E+04	0.3319E+04	118.50
0.5000E+00	0.8333E+00	-0.2667E+04	0.5000E+03	0.2713E+04	169.38
0.8333E+00	0.8333E+00	-0.1083E+04	-0.4167E+03	0.1161E+04	-158.96

PROPRIETARY MATERIAL. ©The McGraw-Hill Companies, Inc. All rights reserved.

13.24 Analyze the problem in Fig. P8.35 for transient response using (*a*) $\alpha = 0$ and (*b*) $\alpha = 0.5$. Use $c = \rho c_p = 1.0$.

Solution: In order to determine the critical time step, first we find the eigenvalues of the problem. The input data files and partial output for the eigenvalue and transient analysis are included in Boxes 13.24a and 13.24b.

Box 13.24a: Input data and edited output for the eigenvalue analysis of Problem 13.24.

```
Prob 8.35a:  Eigenvalues of Problem 8.35 (rectangles)
   0   2   1   1                    ITYPE,IGRAD,ITEM,NEIGN
  12   0                            NVALU, NVCTR
   1   4   1   2                    IELTYP,NPE,MESH,NPRNT
   4   2                            NX, NY
   0.0  0.02  0.02  0.02  0.02      X0, DX(I)
   0.0  0.01  0.01                  Y0, DY(I)
   3                                NSPV
   1 1   6 1   11 1                 ISPV(I,J)
   5.0   0.0  0.0                   A10, A1X, A1Y
   5.0   0.0  0.0                   A20, A2X, A2Y
   0.0                              A00
   1                                ICONV
   10                               NBE
   1  1  2  40.0  20.0
   2  1  2  40.0  20.0
   3  1  2  40.0  20.0
   4  1  2  40.0  20.0
   4  2  3  40.0  20.0
   5  3  4  40.0  20.0
   6  3  4  40.0  20.0
   7  3  4  40.0  20.0
   8  3  4  40.0  20.0
   8  3  4  40.0  20.0               IBE, INOD, BETA, TINF
   1.0  0.0  0.0                    C0,  CX,  CY
```

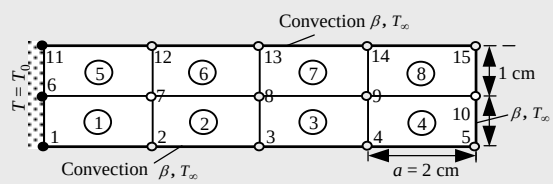


```
S O L U T I O N :
```

$$\boxed{\Delta t_{\text{cr}} = \frac{2}{\lambda_{\max}} = 2.67 \times 10^{-6}}$$

```
Number of Jacobi iterations ..... NROT = 178

E I G E N V A L U E (  1) =   0.750377E+06
E I G E N V A L U E (  2) =   0.678560E+06
E I G E N V A L U E (  3) =   0.634478E+06
E I G E N V A L U E (  4) =   0.616934E+06
E I G E N V A L U E (  5) =   0.300201E+06
E I G E N V A L U E (  6) =   0.228506E+06
E I G E N V A L U E (  7) =   0.184303E+06
E I G E N V A L U E (  8) =   0.166798E+06
E I G E N V A L U E (  9) =   0.140265E+06
E I G E N V A L U E ( 10) =   0.694258E+05
E I G E N V A L U E ( 11) =   0.246351E+05
E I G E N V A L U E ( 12) =   0.716251E+04
```

PROPRIETARY MATERIAL. © The McGraw-Hill Companies, Inc. All rights reserved.

Box 13.24b: Input data and edited output for the transient analysis of Problem 13.24.

```
Prob 8.35b:  Transient analysis of Problem 8.35 (rectangles)
   0   2   1   0                    ITYPE,IGRAD,ITEM,NEIGN
   1   4   1   0                    IELTYP,NPE,MESH,NPRNT
   4   2                            NX, NY
   0.0  0.02  0.02  0.02  0.02      X0, DX(I)
   0.0  0.01  0.01                  Y0, DY(I)
   3                                NSPV
   1 1   6 1   11 1                 ISPV(I,J)
  300.0 300.0 300.0                 VSPV(I)
   0                                NSSV
   5.0   0.0  0.0                   A10, A1X, A1Y
   5.0   0.0  0.0                   A20, A2X, A2Y
   0.0                              A00
   1                                ICONV
   10                               NBE
   1  1  2  40.0  20.0
   2  1  2  40.0  20.0
   3  1  2  40.0  20.0
   4  1  2  40.0  20.0
   4  2  3  40.0  20.0
   5  3  4  40.0  20.0
   6  3  4  40.0  20.0
   7  3  4  40.0  20.0
   8  3  4  40.0  20.0
   8  3  4  40.0  20.0               IBE, INOD, BETA, TINF
   0.0  0.0  0.0                    F0,  FX,  FY
   1.0  0.0  0.0                    C0,  CX,  CY
   500  501  10    0                NTIME,NSTP,INTVL,INTIAL
   1.0E-06   0.0  0.5  1.0E-4       DT,ALFA,GAMA,EPSLN
```

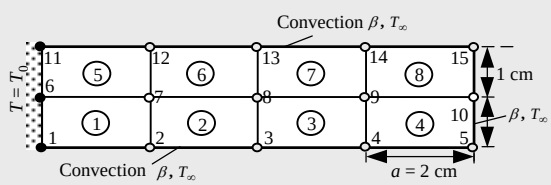


```
*TIME* = 0.10000E-05     Time Step Number =  1

Node    x-coord.      y-coord.    Primary DOF

  1   0.00000E+00   0.00000E+00   0.30000E+03
  2   0.20000E-01   0.00000E+00  -0.80008E+02
  3   0.40000E-01   0.00000E+00   0.21954E+02
  4   0.60000E-01   0.00000E+00  -0.58868E+01
  5   0.80000E-01   0.00000E+00   0.36334E+01
 10   0.80000E-01   0.10000E-01   0.29023E+01
 15   0.80000E-01   0.20000E-01   0.37299E+01

*TIME* = 0.10000E-04     Time Step Number = 10

  1   0.00000E+00   0.00000E+00   0.30000E+03
  2   0.20000E-01   0.00000E+00  -0.74458E+01
  3   0.40000E-01   0.00000E+00  -0.63061E+01
  4   0.60000E-01   0.00000E+00   0.39980E+01
  5   0.80000E-01   0.00000E+00   0.62873E+00
 10   0.80000E-01   0.10000E-01  -0.38760E+00
 15   0.80000E-01   0.20000E-01   0.11335E+01
```

PROPRIETARY MATERIAL. © The McGraw-Hill Companies, Inc. All rights reserved.

(Box 13.24b is continued from the previous page; $\alpha = 0$)

```
*TIME* = 0.40000E-04     Time Step Number = 40
   1   0.00000E+00   0.00000E+00   0.30000E+03
   2   0.20000E-01   0.00000E+00   0.86300E+02
   3   0.40000E-01   0.00000E+00   0.74688E+01
   4   0.60000E-01   0.00000E+00   0.72856E+00
   5   0.80000E-01   0.00000E+00   0.55114E+01
  10   0.80000E-01   0.10000E-01   0.48108E+01
  15   0.80000E-01   0.20000E-01   0.60875E+01

*TIME* = 0.10000E-03     Time Step Number =100
   1   0.00000E+00   0.00000E+00   0.30000E+03
   2   0.20000E-01   0.00000E+00   0.13695E+03
   3   0.40000E-01   0.00000E+00   0.52757E+02
   4   0.60000E-01   0.00000E+00   0.17355E+02
   5   0.80000E-01   0.00000E+00   0.10216E+02
  10   0.80000E-01   0.10000E-01   0.96855E+01
  15   0.80000E-01   0.20000E-01   0.10433E+02

*TIME* = 0.20000E-03     Time Step Number =200
   1   0.00000E+00   0.00000E+00   0.30000E+03
   2   0.20000E-01   0.00000E+00   0.16020E+03
   3   0.40000E-01   0.00000E+00   0.84988E+02
   4   0.60000E-01   0.00000E+00   0.45326E+02
   5   0.80000E-01   0.00000E+00   0.32576E+02
  10   0.80000E-01   0.10000E-01   0.33055E+02
  15   0.80000E-01   0.20000E-01   0.31928E+02

*TIME* = 0.30000E-03     Time Step Number =300
   1   0.00000E+00   0.00000E+00   0.30000E+03
   2   0.20000E-01   0.00000E+00   0.16830E+03
   3   0.40000E-01   0.00000E+00   0.98472E+02
   4   0.60000E-01   0.00000E+00   0.60636E+02
   5   0.80000E-01   0.00000E+00   0.46961E+02
  10   0.80000E-01   0.10000E-01   0.48102E+02
  15   0.80000E-01   0.20000E-01   0.45804E+02

*TIME* = 0.40000E-03     Time Step Number =400
   1   0.00000E+00   0.00000E+00   0.30000E+03
   2   0.20000E-01   0.00000E+00   0.17199E+03
   3   0.40000E-01   0.00000E+00   0.10486E+03
   4   0.60000E-01   0.00000E+00   0.68234E+02
   5   0.80000E-01   0.00000E+00   0.54261E+02
  10   0.80000E-01   0.10000E-01   0.55740E+02
  15   0.80000E-01   0.20000E-01   0.52850E+02

*TIME* = 0.50000E-03     Time Step Number =500
   1   0.00000E+00   0.00000E+00   0.30000E+03
   2   0.20000E-01   0.00000E+00   0.17376E+03
   3   0.40000E-01   0.00000E+00   0.10795E+03
   4   0.60000E-01   0.00000E+00   0.71948E+02
   5   0.80000E-01   0.00000E+00   0.57842E+02
  10   0.80000E-01   0.10000E-01   0.59487E+02
  15   0.80000E-01   0.20000E-01   0.56307E+02
```

PROPRIETARY MATERIAL. © The McGraw-Hill Companies, Inc. All rights reserved.

(Box 13.24b is continued from the previous two pages; $\alpha = 0.5$)

```
*TIME* = 0.10000E-05     Time Step Number =  1
   1   0.00000E+00   0.00000E+00   0.30000E+03
   2   0.20000E-01   0.00000E+00  -0.75048E+02
   3   0.40000E-01   0.00000E+00   0.19257E+02
   4   0.60000E-01   0.00000E+00  -0.48145E+01
   5   0.80000E-01   0.00000E+00   0.28232E+01
  10   0.80000E-01   0.10000E-01   0.22798E+01
  15   0.80000E-01   0.20000E-01   0.29189E+01

*TIME* = 0.10000E-04     Time Step Number = 10
   1   0.00000E+00   0.00000E+00   0.30000E+03
   2   0.20000E-01   0.00000E+00  -0.61555E+01
   3   0.40000E-01   0.00000E+00  -0.56611E+01
   4   0.60000E-01   0.00000E+00   0.35382E+01
   5   0.80000E-01   0.00000E+00   0.90864E+00
  10   0.80000E-01   0.10000E-01  -0.10142E+00
  15   0.80000E-01   0.20000E-01   0.13939E+01

*TIME* = 0.10000E-03     Time Step Number =100
   1   0.00000E+00   0.00000E+00   0.30000E+03
   2   0.20000E-01   0.00000E+00   0.13679E+03
   3   0.40000E-01   0.00000E+00   0.52687E+02
   4   0.60000E-01   0.00000E+00   0.17478E+02
   5   0.80000E-01   0.00000E+00   0.10408E+02
  10   0.80000E-01   0.10000E-01   0.98865E+01
  15   0.80000E-01   0.20000E-01   0.10619E+02

*TIME* = 0.20000E-03     Time Step Number =200
   1   0.00000E+00   0.00000E+00   0.30000E+03
   2   0.20000E-01   0.00000E+00   0.16014E+03
   3   0.40000E-01   0.00000E+00   0.84912E+02
   4   0.60000E-01   0.00000E+00   0.45283E+02
   5   0.80000E-01   0.00000E+00   0.32556E+02
  10   0.80000E-01   0.10000E-01   0.33034E+02
  15   0.80000E-01   0.20000E-01   0.31909E+02

*TIME* = 0.30000E-03     Time Step Number =300
   1   0.00000E+00   0.00000E+00   0.30000E+03
   2   0.20000E-01   0.00000E+00   0.16826E+03
   3   0.40000E-01   0.00000E+00   0.98412E+02
   4   0.60000E-01   0.00000E+00   0.60570E+02
   5   0.80000E-01   0.00000E+00   0.46900E+02
  10   0.80000E-01   0.10000E-01   0.48039E+02
  15   0.80000E-01   0.20000E-01   0.45746E+02

*TIME* = 0.50000E-03     Time Step Number =500
   1   0.00000E+00   0.00000E+00   0.30000E+03
   2   0.20000E-01   0.00000E+00   0.17374E+03
   3   0.40000E-01   0.00000E+00   0.10793E+03
   4   0.60000E-01   0.00000E+00   0.71914E+02
   5   0.80000E-01   0.00000E+00   0.57809E+02
  10   0.80000E-01   0.10000E-01   0.59452E+02
  15   0.80000E-01   0.20000E-01   0.56275E+02
```

PROPRIETARY MATERIAL. ©The McGraw-Hill Companies, Inc. All rights reserved.

13.25 Analyze the axisymmetric problem in Fig. P8.26 using the Crank–Nicolson method. Use an 8×1 mesh of linear rectangular elements and $c = \rho c_p = 3.6 \times 10^6$ J/(m^3·K).

Solution: The eigenvalue analysis gives $\Delta t_{\text{cr}} = 0.1698$. Input data and partial output are included in Boxes 13.25a and 13.25b.

Box 13.25a: Input data and edited output for the eigenvalue analysis of Problem 13.25.

```
Prob 8.26a  Eigenvalue of an axisymmetric problem
0   2   1   1                        ITYPE,IGRAD,ITEM,NEIGN
16  0
1   4   1   2                        IELTYP,NPE,MESH,NPRNT
8   1                                NX, NY
0.0  0.0025  0.0025  0.0025  0.0025
     0.0025  0.0025  0.0025  0.0025 X0, DX(I)
0.0  1.0                              Y0, DY(1)
2                                     NSPV
9 1    18 1                           ISPV(I,J)
0.0   20.0  0.0                       A10, A1X, A1Y
0.0   20.0  0.0                       A20, A2X, A2Y
0.0                                   A00
0                                     ICONV
0.     3.6E06     0.0                 C0,  CX,  CY
S O L U T I O N :

       Number of Jacobi iterations ..... NROT = 225

       E I G E N V A L U E (  1) =   0.117769E+02
       E I G E N V A L U E (  2) =   0.117768E+02
       E I G E N V A L U E (  3) =   0.893008E+01
       E I G E N V A L U E (  4) =   0.389702E+01
       E I G E N V A L U E (  5) =   0.620594E+01
       E I G E N V A L U E (  6) =   0.893014E+01
       E I G E N V A L U E (  7) =   0.620601E+01
       E I G E N V A L U E (  8) =   0.389696E+01
       E I G E N V A L U E (  9) =   0.112116E+01
       E I G E N V A L U E ( 10) =   0.223250E+01
       E I G E N V A L U E ( 11) =   0.223256E+01
       E I G E N V A L U E ( 12) =   0.434475E+00
       E I G E N V A L U E ( 13) =   0.112109E+01
       E I G E N V A L U E ( 14) =   0.434542E+00
       E I G E N V A L U E ( 15) =   0.804288E-01
       E I G E N V A L U E ( 16) =   0.804954E-01
```

$$\boxed{\Delta t_{\text{cr}} = \frac{2}{11.7769} = 0.1698}$$

PROPRIETARY MATERIAL. ©The McGraw-Hill Companies, Inc. All rights reserved.

Box 13.25b: Input data and edited output for the transient analysis of Problem 13.25.

```
Prob 8.26b  Transient analysis of an axisymmetric problem
0   2   1   0                          ITYPE,IGRAD,ITEM,NEIGN
1   4   1   0                          IELTYP,NPE,MESH,NPRNT
8   1                                  NX, NY
0.0  0.0025  0.0025  0.0025  0.0025
     0.0025  0.0025  0.0025  0.0025   X0, DX(I)
0.0  1.0                               Y0, DY(1)
2                                      NSPV
9 1    18 1                            ISPV(I,J)
100.0  100.0                           VSPV(I)
0                                      NSSV
0.0   20.0  0.0                        A10, A1X, A1Y
0.0   20.0  0.0                        A20, A2X, A2Y
0.0                                    A00
0                                      ICONV
0.0  1.0E07  0.0                       F0,  FX,  FY
0.0  3.6E06  0.0                        C0,  CX,  CY
500  501  10     0               NTIME,NSTP,INTVL,INTIAL
0.2  0.5  0.5  1.0E-5            DT,ALFA,GAMA,EPSLN

    *TIME* = 0.10000E+02     Time Step Number = 50

     Node    x-coord.      y-coord.    Primary DOF

       1   0.00000E+00   0.00000E+00   0.53769E+02
       2   0.25000E-02   0.00000E+00   0.55406E+02
       3   0.50000E-02   0.00000E+00   0.59123E+02
       4   0.75000E-02   0.00000E+00   0.64867E+02
       5   0.10000E-01   0.00000E+00   0.72184E+02
       6   0.12500E-01   0.00000E+00   0.80371E+02
       7   0.15000E-01   0.00000E+00   0.88488E+02
       8   0.17500E-01   0.00000E+00   0.95424E+02
       9   0.20000E-01   0.00000E+00   0.10000E+03

    *TIME* = 0.90000E+02     Time Step Number =450

       1   0.00000E+00   0.00000E+00   0.15037E+03
       2   0.25000E-02   0.00000E+00   0.14933E+03
       3   0.50000E-02   0.00000E+00   0.14691E+03
       4   0.75000E-02   0.00000E+00   0.14297E+03
       5   0.10000E-01   0.00000E+00   0.13749E+03
       6   0.12500E-01   0.00000E+00   0.13045E+03
       7   0.15000E-01   0.00000E+00   0.12186E+03
       8   0.17500E-01   0.00000E+00   0.11171E+03
       9   0.20000E-01   0.00000E+00   0.10000E+03

Reached steady-state at this time
```

PROPRIETARY MATERIAL. ©The McGraw-Hill Companies, Inc. All rights reserved.

Problem 13.27: Repeat Problem 13.26 with the mesh of linear triangular elements shown in Fig. 8.3.8.

Solution: Input data and partial output are included in Boxes 13.27a and 13.27b, respectively.

Box 13.27a: Input data for the ground water flow problem of Problem 13.27.

```
Problem 13.27: Ground water flow problem (triangles)
   0   1   0   0                          ITYPE,IGRAD,ITEM,NEIGN
   0   3   2   1                          IELTYP,NPE,MESH,NPRNT
  64   45                                             NEM,NNM
   9                                                 NRECL
   1    5    1    0.0    0.0    600.0     0.0    1.0 NOD1,NODL,...
   6   10    1    0.0   87.5    600.0   175.0    1.0
  11   15    1    0.0  175.0    600.0   350.0    1.0
  16   20    1    0.0  262.5    600.0   525.0    1.0
  21   25    1    0.0  350.0    600.0   700.0    1.0
  26   30    1    0.0  525.0    600.0   787.5    1.0
  31   35    1    0.0  700.0    600.0   875.0    1.0
  36   40    1    0.0  875.0    600.0   962.5    1.0
  41   45    1    0.0 1050.0    600.0  1050.0    1.0
  16                                       NRECEL
   1    7    2    1    3      1   2   6    NEL1,NELL,IELINC,NODINC,..
   2    8    2    1    3      2   7   6
   9   15    2    1    3      6   7  11
  10   16    2    1    3      7  12  11
  17   23    2    1    3     11  12  16
  18   24    2    1    3     12  17  16
  25   31    2    1    3     16  17  21
  26   32    2    1    3     17  22  21
  33   39    2    1    3     21  22  26
  34   40    2    1    3     22  27  26
  41   47    2    1    3     26  27  31
  42   48    2    1    3     27  32  31
  49   55    2    1    3     31  32  36
  50   56    2    1    3     32  37  36
  57   63    2    1    3     36  37  41
  58   64    2    1    3     37  42  41
  5                                        NSPV
 41 1  42 1  43 1  44 1  45 1              ISPV
 100.0 100.0 100.0 100.0 100.0             VSPV
  6                                        NSSV
  21 1   22 1   23 1   24 1   25 1   33 1  ISSV(I,J)
 45.069 90.139 90.139 90.139 45.069 -200.0 VSSV(I)
   1.75  0.0  0.0                          A10, A1X, A1Y
   1.0   0.0  0.0                          A20, A2X, A2Y
   0.0                                     A00
   0                                       ICONV
   0.0  0.0  0.0                           F0, FX, FY
```

PROPRIETARY MATERIAL. ©The McGraw-Hill Companies, Inc. All rights reserved.

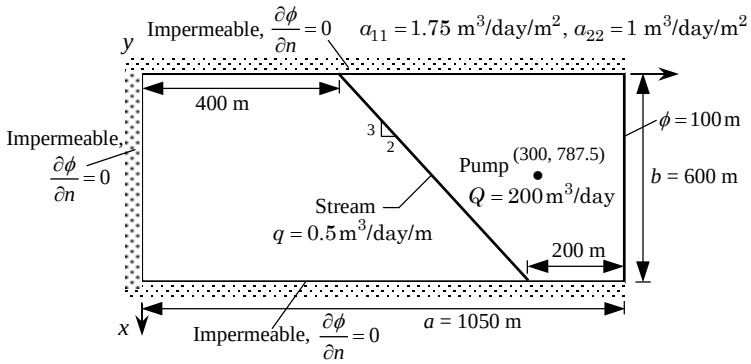

Box 13.27b: Edited output for the ground water flow problem of Problem 13.27.

Node	x-coord.	y-coord.	Primary DOF
1	0.00000E+00	0.00000E+00	0.33097E+03
2	0.15000E+03	0.00000E+00	0.32998E+03
3	0.30000E+03	0.00000E+00	0.32788E+03
4	0.45000E+03	0.00000E+00	0.32598E+03
5	0.60000E+03	0.00000E+00	0.32523E+03
10	0.60000E+03	0.17500E+03	0.32330E+03
15	0.60000E+03	0.35000E+03	0.31538E+03
20	0.60000E+03	0.52500E+03	0.29556E+03
21	0.00000E+00	0.35000E+03	0.35206E+03
22	0.15000E+03	0.43750E+03	0.33574E+03
23	0.30000E+03	0.52500E+03	0.31120E+03
24	0.45000E+03	0.61250E+03	0.28367E+03
25	0.60000E+03	0.70000E+03	0.25282E+03
26	0.00000E+00	0.52500E+03	0.29531E+03
27	0.15000E+03	0.59063E+03	0.26855E+03
28	0.30000E+03	0.65625E+03	0.23939E+03
29	0.45000E+03	0.72188E+03	0.21890E+03
30	0.60000E+03	0.78750E+03	0.19783E+03
31	0.00000E+00	0.70000E+03	0.21492E+03
32	0.15000E+03	0.74375E+03	0.19083E+03
33	0.30000E+03	0.78750E+03	0.14004E+03
34	0.45000E+03	0.83125E+03	0.16513E+03
35	0.60000E+03	0.87500E+03	0.15799E+03
36	0.00000E+00	0.87500E+03	0.14902E+03
37	0.15000E+03	0.89688E+03	0.13931E+03
38	0.30000E+03	0.91875E+03	0.13034E+03
39	0.45000E+03	0.94063E+03	0.13121E+03
40	0.60000E+03	0.96250E+03	0.12729E+03
41	0.00000E+00	0.10500E+04	0.10000E+03
42	0.15000E+03	0.10500E+04	0.10000E+03
43	0.30000E+03	0.10500E+04	0.10000E+03
44	0.45000E+03	0.10500E+04	0.10000E+03
45	0.60000E+03	0.10500E+04	0.10000E+03

PROPRIETARY MATERIAL. © The McGraw-Hill Companies, Inc. All rights reserved.

Problem 13.31: Analyze the flow around cylinder of elliptical cross-section (see Fig. P8.41). Use the symmetry and an appropriate mesh of linear triangular elements. Use the stream function approach.

Solution: Here we use the mesh of linear triangles from Fig. 8.5.10. Input data and partial output are included in Boxes 13.31a and 13.31b, respectively.

Box 13.31a: Input data for the flow around an elliptic cylinder of Problem 13.31.

```
Prob 13.31: Flow around an elliptic cylinder (Stream function-Triangles)
   0   2   0   0                                   ITYPE,IGRAD,ITEM,NEIGN
   0   3   2   1                                   IELTYP,NPE,MESH,NPRNT
  60  42                                           NEM, NNM
   7                                               NRECL
   1    6    1    0.0    0.0    3.0       0.0       0.3164  NOD1,NODL,...
   7   12    1    0.0    0.6667 3.034074  0.12941   0.3164
  13   18    1    0.0    1.3333 3.133975  0.25      0.3164
  19   24    1    0.0    2.0    3.292893  0.35355   0.3164
  25   30    1    1.3333 2.0    3.5       0.4330    0.3164
  31   36    1    2.6667 2.0    3.74118   0.48296   0.3164
  37   42    1    4.0    2.0    4.0       0.5       0.3164
  12                                               NRECEL
   1    9    2    1    3      1  2   8             NEL1,NELL,IELINC,NODINC
   2   10    2    1    3      1  8   7
  11   19    2    1    3      7  8  14
  12   20    2    1    3      7 14  13
  21   29    2    1    3     13 14  20
  22   30    2    1    3     13 20  19
  31   39    2    1    3     19 20  25
  32   40    2    1    3     20 26  25
  41   49    2    1    3     25 26  31
  42   50    2    1    3     26 32  31
  51   59    2    1    3     31 32  37
  52   60    2    1    3     32 38  37
  18                                               NSPV
   1 1   2 1   3 1   4 1   5 1  6 1  12 1  18 1
  24 1  30 1  36 1  42 1   7 1 13 1  19 1  25 1
  31 1  37 1                                       ISPV(I,J)
   0.0   0.0   0.0   0.0   0.0     0.0     0.0
   0.0   0.0   0.0   0.0   0.0   0.6667  1.3333
   2.0   2.0   2.0   2.0                           VSPV(I)
   0                                               NSSV
   1.0  0.0  0.0                                   A10, A1X, A1Y
   1.0  0.0  0.0                                   A20, A2X, A2Y
   0.0                                             A00
   0                                               ICONV
   0.0  0.0  0.0                                   F0,  FX,  FY
```

PROPRIETARY MATERIAL. ©The McGraw-Hill Companies, Inc. All rights reserved.

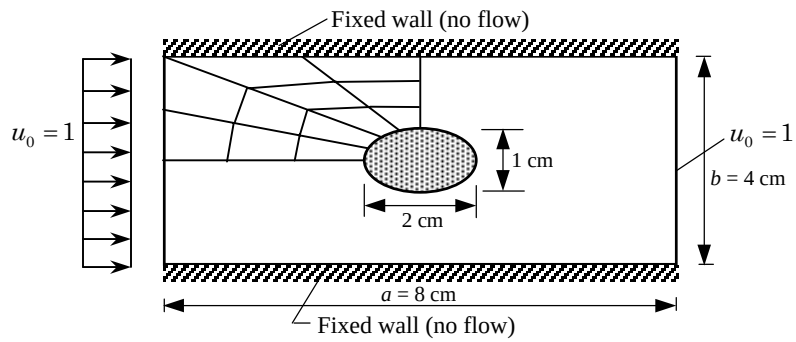

Box 13.31b: Edited output for the flow around an elliptic cylinder of Problem 13.31.

S O L U T I O N :

Node	x-coord.	y-coord.	Primary DOF
7	0.00000E+00	0.66670E+00	0.66670E+00
8	0.29170E+00	0.61504E+00	0.61367E+00
9	0.74096E+00	0.53549E+00	0.53175E+00
10	0.13478E+01	0.42803E+00	0.41956E+00
11	0.21121E+01	0.29267E+00	0.27278E+00
13	0.00000E+00	0.13333E+01	0.13333E+01
14	0.30130E+00	0.12292E+01	0.12276E+01
15	0.76535E+00	0.10687E+01	0.10635E+01
16	0.13921E+01	0.85209E+00	0.83773E+00
17	0.21817E+01	0.57917E+00	0.53821E+00
19	0.00000E+00	0.20000E+01	0.20000E+01
20	0.31658E+00	0.18417E+01	0.18415E+01
21	0.80416E+00	0.15979E+01	0.15949E+01
22	0.14627E+01	0.12686E+01	0.12537E+01
23	0.22923E+01	0.85384E+00	0.79541E+00
26	0.15416E+01	0.18493E+01	0.18450E+01
27	0.18624E+01	0.16173E+01	0.16001E+01
28	0.22958E+01	0.13039E+01	0.12524E+01
29	0.28416E+01	0.90915E+00	0.74952E+00
32	0.27700E+01	0.18542E+01	0.18330E+01
33	0.29291E+01	0.16295E+01	0.15691E+01
34	0.31440E+01	0.13261E+01	0.11951E+01
35	0.34147E+01	0.94393E+00	0.68802E+00
38	0.40000E+01	0.18558E+01	0.18217E+01
39	0.40000E+01	0.16337E+01	0.15440E+01
40	0.40000E+01	0.13337E+01	0.11610E+01
41	0.40000E+01	0.95579E+00	0.65865E+00

PROPRIETARY MATERIAL. ©The McGraw-Hill Companies, Inc. All rights reserved.

Problem 13.33: Analyze the torsion of a member of circular cross-section (see Fig. P8.43) for the state of shear stress distribution. Investigate the accuracy with mesh refinements (by subdividing the mesh in Fig. P8.43 with horizontal and vertical lines).

Solution: Here we use the mesh of linear triangles from Fig. P8.43. Input data and partial output are included in Boxes 13.33a and 13.33b, respectively.

Box 13.33a: Input data for the circular cross-section bar of Problem 13.33.

```
Prob 8.43:  Torsion of a circular cross-section bar (triangles)
   0   2   0   0                          ITYPE,IGRAD,ITEM,NEIGN
   0   3   0   2                          IELTYP,NPE,MESH,NPRNT
   4   6                                  NEM, NNM
   1   2   4
   2   3   5
   2   5   4
   4   5   6                              NOD(I,J)
   0.0 0.0  0.5 0.0  1.0 0.0  0.35355 0.35355
   0.92388  0.38268  0.7071  0.7071      GLXY(I,J)
   3                                      NSPV
   3 1   5 1   6 1                        ISPV(I,J)
  0.0    0.0   0.0                       VSPV(I)
   0                                      NSSV
  1.0   0.0  0.0                          A10, A1X, A1Y
  1.0   0.0  0.0                          A20, A2X, A2Y
   0.0                                    A00
   0                                      ICONV
   10.0  0.0  0.0                         F0,  FX,  FY
```

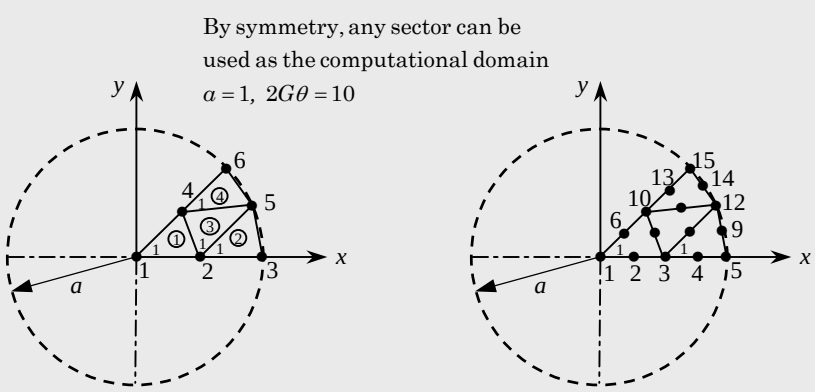

Mesh of 4 linear triangles Mesh of 4 quadratic triangles

PROPRIETARY MATERIAL. © The McGraw-Hill Companies, Inc. All rights reserved.

Box 13.33b: Edited output for the circular cross-section bar of Problem 13.33 for two different meshes.

S O L U T I O N (for the 4 linear element mesh):

Node	x-coord.	y-coord.	Primary DOF
1	0.00000E+00	0.00000E+00	0.26292E+01
2	0.50000E+00	0.00000E+00	0.19179E+01
3	0.10000E+01	0.00000E+00	0.00000E+00
4	0.35355E+00	0.35355E+00	0.19179E+01
5	0.92388E+00	0.38268E+00	0.00000E+00
6	0.70710E+00	0.70710E+00	0.00000E+00

The orientation of gradient vector is measured from the positive x-axis

x-coord.	y-coord.	a22(du/dy)	-a11(du/dx)	Flux Mgntd	Orientation
0.2845E+00	0.1179E+00	-0.5892E+00	0.1423E+01	0.1540E+01	112.50
0.8080E+00	0.1276E+00	-0.7630E+00	0.3836E+01	0.3911E+01	101.25
0.5925E+00	0.2454E+00	-0.1364E+01	0.3293E+01	0.3565E+01	112.50
0.6615E+00	0.4811E+00	-0.2173E+01	0.3252E+01	0.3911E+01	123.75

S O L U T I O N (for the 4 quadratic element mesh):

Node	x-coord.	y-coord.	Primary DOF
1	0.00000E+00	0.00000E+00	0.24893E+01
2	0.25000E+00	0.00000E+00	0.23481E+01
3	0.50000E+00	0.00000E+00	0.18618E+01
4	0.75000E+00	0.00000E+00	0.10959E+01
5	0.10000E+01	0.00000E+00	0.00000E+00
6	0.17677E+00	0.17677E+00	0.23481E+01
7	0.46194E+00	0.19134E+00	0.18811E+01
8	0.73559E+00	0.14632E+00	0.10960E+01
9	0.98078E+00	0.19509E+00	0.00000E+00
10	0.35355E+00	0.35355E+00	0.18618E+01
11	0.62360E+00	0.41668E+00	0.10960E+01
12	0.92388E+00	0.38268E+00	0.00000E+00
13	0.53033E+00	0.53033E+00	0.10959E+01
14	0.83147E+00	0.55557E+00	0.00000E+00
15	0.70711E+00	0.70711E+00	0.00000E+00

$$[B] = \begin{bmatrix} 1 & 3 & 10 & 2 & 7 & 6 \\ 3 & 12 & 10 & 8 & 11 & 7 \\ 3 & 5 & 12 & 4 & 9 & 8 \\ 10 & 12 & 15 & 11 & 14 & 13 \end{bmatrix}$$

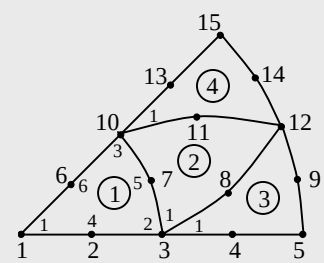

x-coord.	y-coord.	a22(du/dy)	-a11(du/dx)	Flux Mgntd	Orientation
0.3001E+00	0.1243E+00	-0.6209E+00	0.1499E+01	0.1623E+01	112.50
0.6119E+00	0.2535E+00	-0.1293E+01	0.3122E+01	0.3379E+01	112.50
0.8268E+00	0.1092E+00	-0.5720E+00	0.4143E+01	0.4182E+01	97.86
0.6619E+00	0.5074E+00	-0.2525E+01	0.3334E+01	0.4182E+01	127.14

PROPRIETARY MATERIAL. © The McGraw-Hill Companies, Inc. All rights reserved.

Problem 13.36: Analyze the rectangular membrane problem in Fig. P8.48 with 4×4 and 8×8 meshes of linear rectangular elements in the computational domain. Take $a_{11} = a_{22} = 1$ and $f_0 = 1$.

Solution: Input data and partial output are included in Box 13.36.

Box 13.36: Input data and edited output for the 4×4 mesh of linear rectangular elements.

```
Prob 13.36: Deflections of the membrane of Problem 8.48 (rectangles)
   0   2   0   0                                  ITYPE,IGRAD,ITEM,NEIGN
   1   4   1   2                                  IELTYP,NPE,MESH,NPRNT
   4   4                                          NX, NY
   0.0 0.0125 0.0125 0.0125 0.0125                DX(I)
   0.0 0.02  0.02  0.02  0.02                     DY(I)
   13                                             NSPV
   1 1   2 1   3 1   4 1   5 1   6 1  11 1
  16 1  21 1  22 1  23 1  24 1  25 1              ISPV(I,J)
   0.0   0.0   0.0   0.0   0.0   0.0  0.0
   0.0   0.0   0.109375  0.1875  0.234375  0.25 VSPV(I)
   0                                             NSSV
   1.0   0.0  0.0                                A10, A1X, A1Y
   1.0   0.0  0.0                                A20, A2X, A2Y
   0.0                                           A00
   0                                             ICONV
   1.0  0.0  0.0                                 F0,  FX,  FY
```

Node	x-coord.	y-coord.	Primary DOF
7	0.12500E-01	0.20000E-01	0.10669E-01
8	0.25000E-01	0.20000E-01	0.19647E-01
9	0.37500E-01	0.20000E-01	0.25612E-01
10	0.50000E-01	0.20000E-01	0.27705E-01
12	0.12500E-01	0.40000E-01	0.25698E-01
13	0.25000E-01	0.40000E-01	0.47286E-01
14	0.37500E-01	0.40000E-01	0.61702E-01
15	0.50000E-01	0.40000E-01	0.66745E-01
17	0.12500E-01	0.60000E-01	0.51737E-01
18	0.25000E-01	0.60000E-01	0.95449E-01
19	0.37500E-01	0.60000E-01	0.12351E+00
20	0.50000E-01	0.60000E-01	0.13312E+00
22	0.12500E-01	0.80000E-01	0.10938E+00
23	0.25000E-01	0.80000E-01	0.18750E+00
24	0.37500E-01	0.80000E-01	0.23438E+00
25	0.50000E-01	0.80000E-01	0.25000E+00

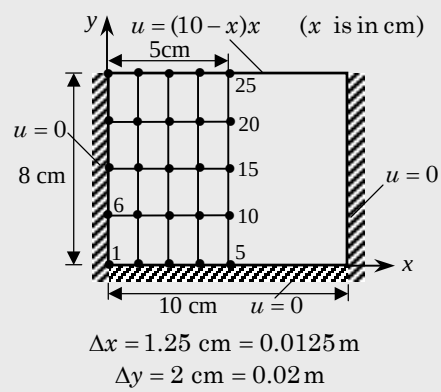

PROPRIETARY MATERIAL. © The McGraw-Hill Companies, Inc. All rights reserved.

Problem 13.37: Repeat Problem 13.36 with equivalent meshes of quadratic elements.

Solution: Input data and partial output are included in Box 13.37.

Box 13.37: Input data and edited output for the 2×2 mesh of nine-node rectangular elements.

```
Prob 13.37: Deflections of the membrane of Problem 8.48 (rectangles)
   0   2   0   0                                ITYPE,IGRAD,ITEM,NEIGN
   1   4   1   2                                IELTYP,NPE,MESH,NPRNT
   4   4                                        NX, NY
   0.0 0.025 0.025                              DX(I)
   0.0 0.04  0.04                               DY(I)
   13                                           NSPV
   1 1   2 1   3 1   4 1   5 1   6 1  11 1
  16 1  21 1  22 1  23 1  24 1  25 1            ISPV(I,J)
   0.0   0.0   0.0   0.0   0.0   0.0  0.0
   0.0   0.0   0.109375  0.1875  0.234375  0.25 VSPV(I)
   0                                            NSSV
   1.0   0.0  0.0                               A10, A1X, A1Y
   1.0   0.0  0.0                               A20, A2X, A2Y
   0.0                                          A00
   0                                            ICONV
   1.0  0.0  0.0                                F0,  FX,  FY
```

Node	x-coord.	y-coord.	Primary DOF
7	0.12500E-01	0.20000E-01	0.11083E-01
8	0.25000E-01	0.20000E-01	0.20366E-01
9	0.37500E-01	0.20000E-01	0.26477E-01
10	0.50000E-01	0.20000E-01	0.28619E-01
12	0.12500E-01	0.40000E-01	0.26859E-01
13	0.25000E-01	0.40000E-01	0.48751E-01
14	0.37500E-01	0.40000E-01	0.63252E-01
15	0.50000E-01	0.40000E-01	0.68306E-01
17	0.12500E-01	0.60000E-01	0.53199E-01
18	0.25000E-01	0.60000E-01	0.97014E-01
19	0.37500E-01	0.60000E-01	0.12487E+00
20	0.50000E-01	0.60000E-01	0.13443E+00
22	0.12500E-01	0.80000E-01	0.10938E+00
23	0.25000E-01	0.80000E-01	0.18750E+00
24	0.37500E-01	0.80000E-01	0.23438E+00
25	0.50000E-01	0.80000E-01	0.25000E+00

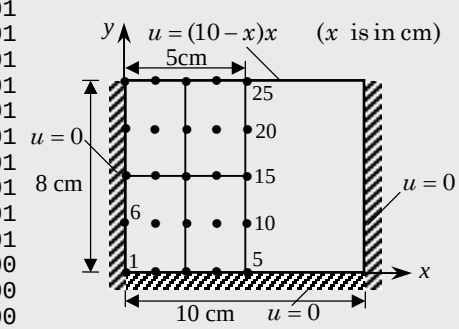

$\Delta x = 2.5$ cm $= 0.025$ m

$\Delta y = 4$ cm $= 0.04$ m

PROPRIETARY MATERIAL. © The McGraw-Hill Companies, Inc. All rights reserved.

Problem 13.38: Determine the eigenvalues of the rectangular membrane in Fig. P8.48 using a 4×4 mesh of linear rectangular elements in the half-domain. Use $c = 1.0$.

Solution: Input data and partial output are included in Box 13.38.

Box 13.38: Input data and edited output for the 4×4 mesh of linear rectangular elements.

```
 Prob 8.48:  Frequencies of a square membrane (rectangles)
 0   2   2   1                            ITYPE,IGRAD,ITEM,NEIGN
 12  0                                    NVALU, NVCTR
 1   4   1   2                            IELTYP,NPE,MESH,NPRNT
 4   4                                    NX, NY
 0.0 0.0125 0.0125 0.0125 0.0125          DX(I)
 0.0 0.02  0.02  0.02  0.02               DY(I)
 13                                       NSPV
 1 1   2 1   3 1   4 1   5 1   6 1  11 1
16 1  21 1  22 1  23 1  24 1  25 1        ISPV(I,J)
 1.0   0.0  0.0                           A10, A1X, A1Y
 1.0   0.0  0.0                           A20, A2X, A2Y
 0.0                                      A00
 0                                        ICONV
 1.0  0.0  0.0                            C0,  CX,  CY

 S O L U T I O N :

   Number of Jacobi iterations ..... NROT = 150

   Eigenvalue(  1) =   0.884549E+05   Frequency =  0.29741E+03

   Eigenvalue(  2) =   0.761512E+05   Frequency =  0.27596E+03

   Eigenvalue(  3) =   0.702742E+05   Frequency =  0.26509E+03

   Eigenvalue(  4) =   0.526383E+05   Frequency =  0.22943E+03

   Eigenvalue(  5) =   0.297534E+05   Frequency =  0.17249E+03

   Eigenvalue(  6) =   0.403291E+05   Frequency =  0.20082E+03

   Eigenvalue(  7) =   0.344521E+05   Frequency =  0.18561E+03

   Eigenvalue(  8) =   0.208052E+05   Frequency =  0.14424E+03

   Eigenvalue(  9) =   0.174488E+05   Frequency =  0.13209E+03

   Eigenvalue( 10) =   0.115714E+05   Frequency =  0.10757E+03

   Eigenvalue( 11) =   0.849973E+04   Frequency =  0.92194E+02

   Eigenvalue( 12) =   0.262268E+04   Frequency =  0.51212E+02
```

PROPRIETARY MATERIAL. ©The McGraw-Hill Companies, Inc. All rights reserved.

Problem 13.39: Determine the eigenvalues of the circular membrane problem in Fig. P8.49 with a mesh of four quadratic triangular elements. Use $c = 1.0$.

Solution: Input data and partial output are included in Box 13.39.

Box 13.39: Input data and edited output for the mesh of four quadratic elements.

```
Prob 13.39:  Vibrations of a circular membrane (quadratic triangles)
   0   2   2   1                                ITYPE,IGRAD,ITEM,NEIGN
  10   1
   0   6   0   0                                IELTYP,NPE,MESH,NPRNT
   4  15                                        NEM, NNM
   1   3  10  2  7  6
   3  12  10  8 11  7
   3   5  12  4  9  8
  10  12  15 11 14 13                           NOD(I,J)
   0.0     0.0      0.25    0.0      0.5     0.0
   0.75    0.0      1.0     0.0      0.17677 0.17677
   0.46194 0.19134  0.73559 0.14632  0.98078 0.19509
   0.35355 0.35355  0.62360 0.41668  0.92388 0.38268
   0.53033 0.53033  0.83147 0.55557  0.70711 0.70711  GLXY(I,J)
   5                                            NSPV
   5 1   9 1  12 1  14 1  15 1                  ISPV(I,J)
  1.0   0.0  0.0                                A10, A1X, A1Y
  1.0   0.0  0.0                                A20, A2X, A2Y
   0.0                                          A00
   0                                            ICONV
   1.0  0.0  0.0                               C0,  CX,  CY

    Eigenvalue(  1) =   0.587824E+03   Frequency =  0.24245E+02
    Eigenvalue(  2) =   0.554397E+03   Frequency =  0.23546E+02
    Eigenvalue(  3) =   0.489670E+03   Frequency =  0.22128E+02
    Eigenvalue(  4) =   0.280291E+03   Frequency =  0.16742E+02
    Eigenvalue(  9) =   0.313889E+02   Frequency =  0.56026E+01
    Eigenvalue( 10) =   0.579571E+01   Frequency =  0.24074E+01
```

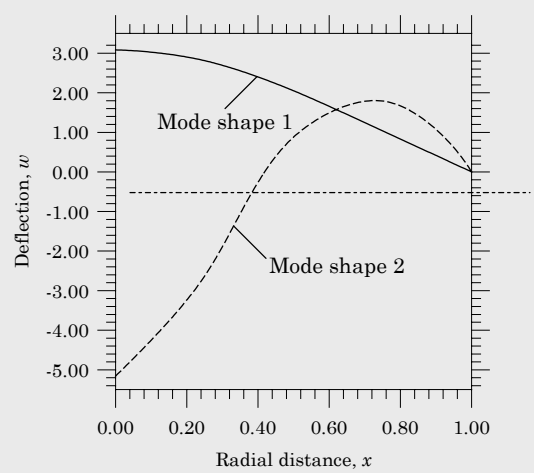

PROPRIETARY MATERIAL. © The McGraw-Hill Companies, Inc. All rights reserved.

Problem 13.40: Determine the transient response of the problem in Fig. P8.49 (see Problem 13.39). Assume zero initial conditions, $c = 1$ and $f_0 = 1$. Use $\alpha = \gamma = 0.5$, $\Delta t = 0.05$, and plot the center deflection versus time t for $t = 0$ to $t = 2.4$.

Solution: Input data and partial output are included in Boxes 13.40a and 13.40b.

Box 13.40a: Input data for the transient response of a circular membrane (mesh of four quadratic elements is used).

```
Prob 13.40: Transient analysis of a circular membrane (quadr tri)
   0   2   2   0                            ITYPE,IGRAD,ITEM,NEIGN
   0   6   0   0                            IELTYP,NPE,MESH,NPRNT
   4  15                                    NEM, NNM
   1   3  10  2  7  6
   3  12  10  8 11  7
   3   5  12  4  9  8
  10  12  15 11 14 13                       NOD(I,J)
   0.0     0.0      0.25    0.0      0.5     0.0
   0.75    0.0      1.0     0.0      0.17677 0.17677
   0.46194 0.19134  0.73559 0.14632  0.98078 0.19509
   0.35355 0.35355  0.62360 0.41668  0.92388 0.38268
   0.53033 0.53033  0.83147 0.55557  0.70711 0.70711  GLXY(I,J)
   5                                       NSPV
   5 1   9 1  12 1  14 1  15 1             ISPV(I,J)
   0.0   0.0   0.0  0.0    0.0             VSPV(I)
   0                                       NSSV
  1.0   0.0  0.0                           A10, A1X, A1Y
  1.0   0.0  0.0                           A20, A2X, A2Y
   0.0                                     A00
   0                                       ICONV
  1.0  0.0  0.0                            F0,  FX,  FY
  1.0  0.0  0.0                            C0,  CX,  CY
   50  51  1     0                        NTIME,NSTP,INTVL,INTIAL
   0.05  0.5  0.5  1.0E-5                  DT,ALFA,GAMA,EPSLN
```

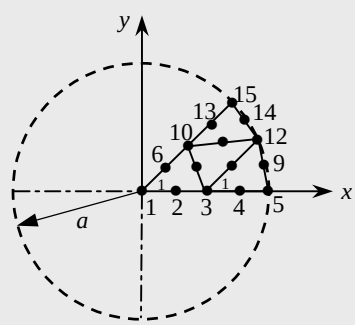

Mesh of 4 quadratic triangles

PROPRIETARY MATERIAL. ©The McGraw-Hill Companies, Inc. All rights reserved.

Box 13.40b: Edited output for the transient response of a circular membrane (mesh of four quadratic elements is used).

```
*TIME* = 0.50000E-01     Time Step Number =  1

    Node    x-coord.      y-coord.    Primary DOF

      1   0.00000E+00   0.00000E+00   0.50716E-03
      2   0.25000E+00   0.00000E+00   0.63430E-03
      3   0.50000E+00   0.00000E+00   0.41805E-03
      4   0.75000E+00   0.00000E+00   0.82401E-03
      5   0.10000E+01   0.00000E+00   0.00000E+00

*TIME* = 0.50000E+00     Time Step Number = 10
      1   0.00000E+00   0.00000E+00   0.10904E+00
      2   0.25000E+00   0.00000E+00   0.11163E+00
      3   0.50000E+00   0.00000E+00   0.11476E+00
      4   0.75000E+00   0.00000E+00   0.83341E-01
      5   0.10000E+01   0.00000E+00   0.00000E+00

*TIME* = 0.10000E+01     Time Step Number = 20
      1   0.00000E+00   0.00000E+00   0.48343E+00
      2   0.25000E+00   0.00000E+00   0.42507E+00
      3   0.50000E+00   0.00000E+00   0.30774E+00
      4   0.75000E+00   0.00000E+00   0.16717E+00
      5   0.10000E+01   0.00000E+00   0.00000E+00

*TIME* = 0.20000E+01     Time Step Number = 40
      1   0.00000E+00   0.00000E+00   0.22552E+00
      2   0.25000E+00   0.00000E+00   0.22546E+00
      3   0.50000E+00   0.00000E+00   0.18105E+00
      4   0.75000E+00   0.00000E+00   0.10533E+00
      5   0.10000E+01   0.00000E+00   0.00000E+00
```

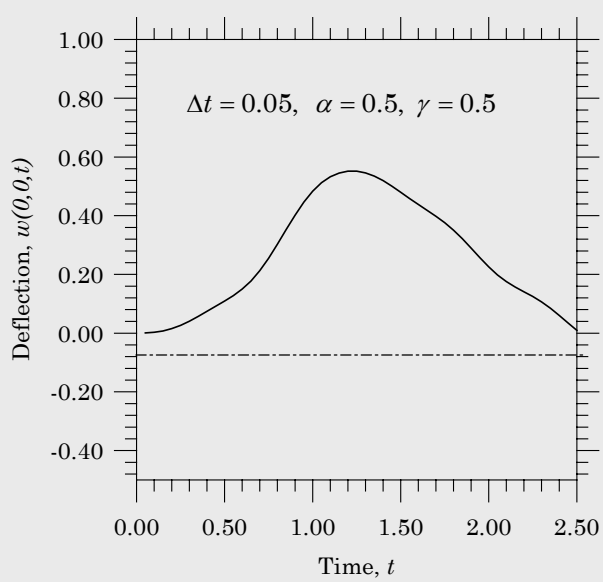

PROPRIETARY MATERIAL. © The McGraw-Hill Companies, Inc. All rights reserved.

Problem 13.41: Analyze the viscous flow problem in Problem 10.8 using an 8×8 mesh of linear rectangular elements. Plot the horizontal velocity $u(0.5, y)$ versus y, and the pressure along the top surface of the cavity. Investigate the effect of the penalty parameter on the solution (see Fig. P10.8).

Solution: Input data and partial output are included in Boxe 13.41. Also, see Fig. 13.41 for plots of the velocity $v_x(0.5, y)$ versus y and $P(x, 0.9375)$ versus x.

Box 13.41: Input data and partial output for the lid-driven cavity problem (uniform mesh of 8×8 rectangular elements is used).

```
Prob. 13.41: Steady flow of viscous incompressible fluid in a cavity
   1   1   0   0   0                          ITYPE,ISTRS,ITEM,NEIGN
   1   4   1   0                              IEL, NPE, MESH, NPRNT
   8   8                                      NX, NY
   0.0  0.125 0.125 0.125 0.125
        0.125 0.125 0.125 0.125               X0, DX(I)
   0.0  0.125 0.125 0.125 0.125
        0.125 0.125 0.125 0.125               Y0, DY(I)
   64                                         NSPV
    1 1    1 2    2 1    2 2    3 1    3 2    4 1    4 2    5 1    5 2
    6 1    6 2    7 1    7 2    8 1    8 2    9 1    9 2   10 1   10 2
   18 1   18 2   19 1   19 2   27 1   27 2   28 1   28 1   36 1   36 2
   37 1   37 2   45 1   45 2   46 1   46 2   54 1   54 2   55 1   55 2
   63 1   63 2   64 1   64 2   72 1   72 2   73 1   73 2   74 1   74 2
   75 1   75 2   76 1   76 2   77 1   77 2   78 1   78 2   79 1   79 2
   80 1   80 2   81 1   81 2
    0.0    0.0    0.0    0.0    0.0    0.0    0.0    0.0    0.0    0.0
    0.0    0.0    0.0    0.0    0.0    0.0    0.0    0.0    0.0    0.0
    0.0    0.0    0.0    0.0    0.0    0.0    0.0    0.0    0.0    0.0
    0.0    0.0    0.0    0.0    0.0    0.0    0.0    0.0    0.0    0.0
    0.0    0.0    0.0    0.0    0.0    0.0    0.0    0.0   0.38268 0.0
    0.7071 0.0   0.92388 0.0    1.0    0.0   0.92388 0.0   0.7071  0.0
   0.38268 0.0    0.0    0.0
   0                                          NSSV
   1.0   1.0E2                                AMU, PENLTY
   0.0   0.0   0.0                            F0, FX, FY
```

Node	x-coord.	y-coord.	Value of u	Value of v
5	0.50000E+00	0.00000E+00	0.00000E+00	0.00000E+00
14	0.50000E+00	0.12500E+00	-0.56878E-01	0.29798E-02
23	0.50000E+00	0.25000E+00	-0.10743E+00	-0.58367E-02
32	0.50000E+00	0.37500E+00	-0.13835E+00	0.69427E-03
41	0.50000E+00	0.50000E+00	-0.18925E+00	-0.57231E-02
50	0.50000E+00	0.62500E+00	-0.16489E+00	0.95842E-03
59	0.50000E+00	0.75000E+00	-0.61431E-01	-0.27417E-02
68	0.50000E+00	0.87500E+00	0.29025E+00	0.14788E-02
77	0.50000E+00	0.10000E+01	0.10000E+01	0.00000E+00

PROPRIETARY MATERIAL. ©The McGraw-Hill Companies, Inc. All rights reserved.

(a)

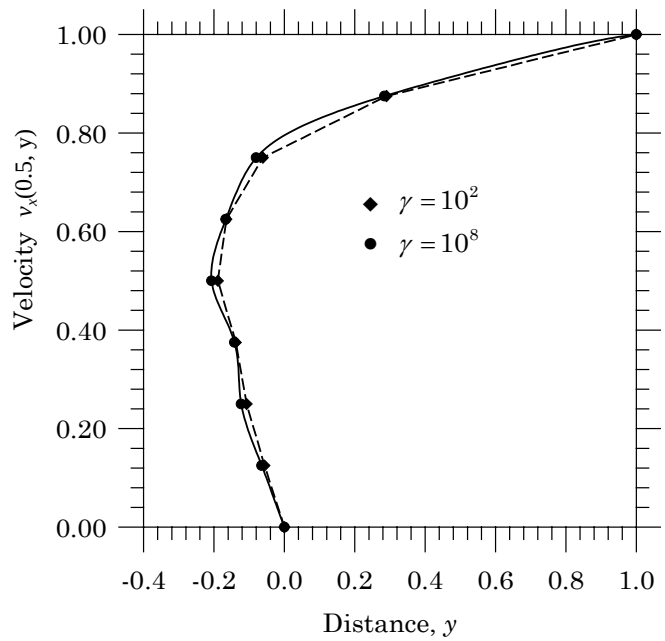

(b)

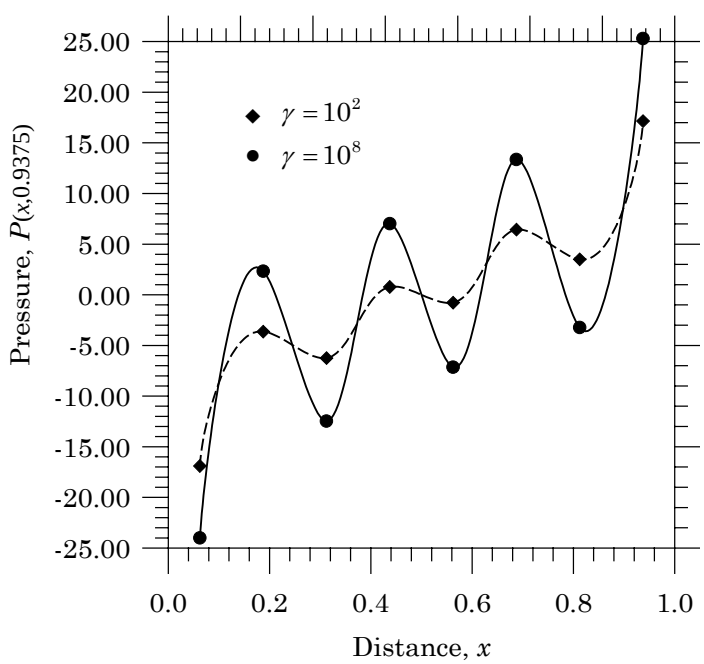

Figure 13.41: Plots of (a) velocity $v_x(0.5, y)$ versus y and (b) $P(x, 0.9375)$ versus x for the lid-driven cavity (uniform mesh of 8×8 rectangular elements is used).

PROPRIETARY MATERIAL. ©The McGraw-Hill Companies, Inc. All rights reserved.

Problem 13.46: Analyze the cavity problem in Problem 13.41 for its transient solution. Use $\rho = 1.0$, zero initial conditions, penalty parameter $\gamma = 10^8$, time parameter $\alpha = 0.5$, and a time step of $\Delta t = 0.005$ to capture the evolution of $v_x(0.5, y)$ with time.

Solution: Input data and partial output are included in Box 13.46.

Box 13.46: Input data and partial output for the transient analysis of the lid-driven cavity problem (uniform mesh of 8×8 rectangular elements).

```
Prob. 13.46: Transient analysis of the lid-driven cavity problem
1   1   1   0                                ITYPE,ISTRS,ITEM,NEIGN
1   4   1   0                                IEL, NPE, MESH, NPRNT
8   8                                        NX, NY
0.0  0.125 0.125 0.125 0.125
     0.125 0.125 0.125 0.125                 X0, DX(I)
0.0  0.125 0.125 0.125 0.125
     0.125 0.125 0.125 0.125                 Y0, DY(I)
64                                           NSPV
 1 1    1 2    2 1    2 2    3 1    3 2    4 1    4 2    5 1    5 2
 6 1    6 2    7 1    7 2    8 1    8 2    9 1    9 2   10 1   10 2
18 1   18 2   19 1   19 2   27 1   27 2   28 1   28 1   36 1   36 2
37 1   37 2   45 1   45 2   46 1   46 2   54 1   54 2   55 1   55 2
63 1   63 2   64 1   64 2   72 1   72 2   73 1   73 2   74 1   74 2
75 1   75 2   76 1   76 2   77 1   77 2   78 1   78 2   79 1   79 2
80 1   80 2   81 1   81 2
 0.0    0.0    0.0    0.0    0.0    0.0    0.0    0.0    0.0    0.0
 0.0    0.0    0.0    0.0    0.0    0.0    0.0    0.0    0.0    0.0
 0.0    0.0    0.0    0.0    0.0    0.0    0.0    0.0    0.0    0.0
 0.0    0.0    0.0    0.0    0.0    0.0    0.0    0.0    0.0    0.0
 0.0    0.0    0.0    0.0    0.0    0.0    0.0    0.0   0.38268 0.0
 0.7071 0.0   0.92388 0.0    1.0    0.0   0.92388 0.0   0.7071  0.0
0.38268 0.0    0.0    0.0
0                                            NSSV
1.0   1.0E8                                  AMU, PENLTY
0.0   0.0   0.0                              F0, FX, FY
1.0   0.0   0.0                              C0,  CX,  CY
20    21    1   0                            NTIME,NSTP,INTVL,INTIAL
0.005  0.5  0.5  1.0E-3                      DT,ALFA,GAMA,EPSLN
```

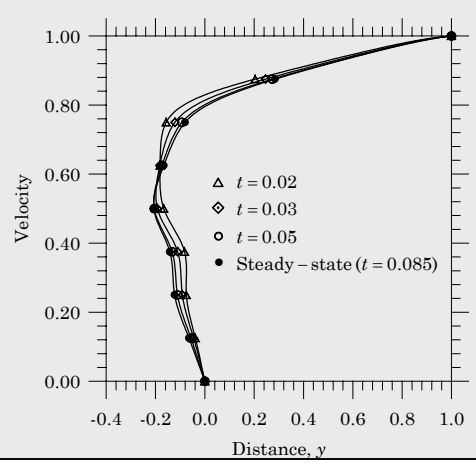

PROPRIETARY MATERIAL. © The McGraw-Hill Companies, Inc. All rights reserved.

Problem 13.48: Analyze the plane elasticity problem in Fig. P11.7 using 10×4 mesh of linear rectangular elements. Evaluate the results (i.e., displacements and stresses) qualitatively. Use the plane stress assumption.

Solution: The loads at nodes 11, 22, 44 and 55 were calculated in the solution to Problem 11.7. The input data and partial output are included in Boxes 13.48a through 13.48c. Note that the vertical deflection as per the classical beam theory is (for a beam fixed at the left end and subjected to pure bending moment at the right end)

$$u_y(x) = -\frac{M_0 x^2}{2EI} \quad \text{where} \quad I = \frac{hb^3}{12} = \frac{2}{3}$$

Hence, the vertical deflection at node 11 or 55 as per the beam theory is $u_y(6) = -0.54 \times 10^{-3}$cm. The elasticity solution predicted with the chosen mesh is $u_y(6, 0) = -0.5144 \times 10^{-3}$cm. Of course, the boundary conditions of elasticity are not quite the same as the "fixed" boundary condition used in arriving at the beam deflection.

Box 13.48a: Input data for the static analysis of the plane stress problem in Fig. P11.7 (nonuniform mesh of 10×4 rectangular elements is used).

```
Problem 13.48: Bending of a cantilever plate using elasticity eqs
  2   1   0   0                                ITYPE,IGRAD,ITEM,NEIGN
  1   4   1   0                                IELTYP,NPE,MESH,NPRNT
  10  4                                        NX, NY
  0.0 0.125 0.125 0.25 0.25 0.5 0.75 0.75
  1.0 1.0   1.25                               X0,DX(I)
  0.0 0.5  0.5  0.5  0.5                       Y0,DY(I)
  6                                            NSPV
  1  1   12 1   23 1   23 2   34 1   45 1      ISPV
  0.0    0.0    0.0    0.0    0.0    0.0      VSPV
  4                                            NSSV
  11  1   22  1  44  1  55  1                  ISSV
 -187.5  -225.0  225.0  187.5                 VSSV
  1                                            LNSTRS
  30.0E06  30.0E06  0.3  11.53846E06  1.0     E1,E2,ANU12,G12,THKNS
   0.0      0.0     0.0                        F0, FX, FY
```

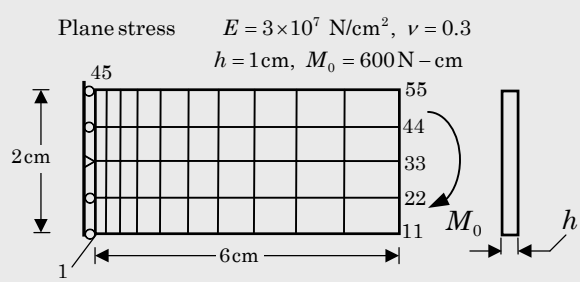

PROPRIETARY MATERIAL. ©The McGraw-Hill Companies, Inc. All rights reserved.

Box 13.48b: Deflections of the plane stress problem in Fig. P11.7 (nonuniform mesh of 10×4 rectangular elements is used).

Node	x-coord.	y-coord.	Value of u	Value of v
1	0.00000E+00	0.00000E+00	0.00000E+00	-0.44216E-05
2	0.12500E+00	0.00000E+00	-0.37352E-05	-0.46542E-05
3	0.25000E+00	0.00000E+00	-0.74728E-05	-0.53515E-05
4	0.50000E+00	0.00000E+00	-0.14897E-04	-0.81369E-05
5	0.75000E+00	0.00000E+00	-0.22359E-04	-0.12776E-04
6	0.12500E+01	0.00000E+00	-0.36942E-04	-0.27563E-04
7	0.20000E+01	0.00000E+00	-0.58041E-04	-0.63135E-04
8	0.27500E+01	0.00000E+00	-0.79386E-04	-0.11462E-03
9	0.37500E+01	0.00000E+00	-0.10646E-03	-0.20746E-03
10	0.47500E+01	0.00000E+00	-0.13396E-03	-0.32777E-03
11	0.60000E+01	0.00000E+00	-0.16520E-03	-0.51440E-03
12	0.00000E+00	0.50000E+00	0.00000E+00	-0.10905E-05
13	0.12500E+00	0.50000E+00	-0.18461E-05	-0.13241E-05
14	0.25000E+00	0.50000E+00	-0.36899E-05	-0.20262E-05
15	0.50000E+00	0.50000E+00	-0.73777E-05	-0.48223E-05
16	0.75000E+00	0.50000E+00	-0.11029E-04	-0.94826E-05
17	0.12500E+01	0.50000E+00	-0.18282E-04	-0.24330E-04
18	0.20000E+01	0.50000E+00	-0.29024E-04	-0.59949E-04
19	0.27500E+01	0.50000E+00	-0.39502E-04	-0.11150E-03
20	0.37500E+01	0.50000E+00	-0.53253E-04	-0.20443E-03
21	0.47500E+01	0.50000E+00	-0.66617E-04	-0.32466E-03
22	0.60000E+01	0.50000E+00	-0.84050E-04	-0.51167E-03
35	0.12500E+00	0.15000E+01	0.18461E-05	-0.13241E-05
36	0.25000E+00	0.15000E+01	0.36899E-05	-0.20262E-05
37	0.50000E+00	0.15000E+01	0.73777E-05	-0.48223E-05
38	0.75000E+00	0.15000E+01	0.11029E-04	-0.94826E-05
39	0.12500E+01	0.15000E+01	0.18282E-04	-0.24330E-04
40	0.20000E+01	0.15000E+01	0.29024E-04	-0.59949E-04
41	0.27500E+01	0.15000E+01	0.39502E-04	-0.11150E-03
42	0.37500E+01	0.15000E+01	0.53253E-04	-0.20443E-03
43	0.47500E+01	0.15000E+01	0.66617E-04	-0.32466E-03
44	0.60000E+01	0.15000E+01	0.84050E-04	-0.51167E-03
45	0.00000E+00	0.20000E+01	0.00000E+00	-0.44216E-05
46	0.12500E+00	0.20000E+01	0.37352E-05	-0.46542E-05
47	0.25000E+00	0.20000E+01	0.74728E-05	-0.53515E-05
48	0.50000E+00	0.20000E+01	0.14897E-04	-0.81369E-05
49	0.75000E+00	0.20000E+01	0.22359E-04	-0.12776E-04
50	0.12500E+01	0.20000E+01	0.36942E-04	-0.27563E-04
51	0.20000E+01	0.20000E+01	0.58041E-04	-0.63135E-04
52	0.27500E+01	0.20000E+01	0.79386E-04	-0.11462E-03
53	0.37500E+01	0.20000E+01	0.10646E-03	-0.20746E-03
54	0.47500E+01	0.20000E+01	0.13396E-03	-0.32777E-03
55	0.60000E+01	0.20000E+01	0.16520E-03	-0.51440E-03

PROPRIETARY MATERIAL. ©The McGraw-Hill Companies, Inc. All rights reserved.

Box 13.48c: Stresses in the plane stress problem in Fig. P11.7 (nonuniform mesh of 10×4 rectangular elements is used).

x-coord.	y-coord.	sigma-x	sigma-y	sigma-xy
0.6250E-01	0.2500E+00	-0.6701E+03	-0.1195E+01	0.2801E+00
0.1875E+00	0.2500E+00	-0.6702E+03	-0.1392E+01	0.8576E+00
0.3750E+00	0.2500E+00	-0.6670E+03	-0.8944E+00	0.1599E+01
0.6250E+00	0.2500E+00	-0.6674E+03	-0.1988E+01	0.2901E+01
0.1000E+01	0.2500E+00	-0.6553E+03	-0.8439E+00	0.4113E+01
0.1625E+01	0.2500E+00	-0.6363E+03	0.1668E+01	0.2497E+01
0.2375E+01	0.2500E+00	-0.6370E+03	-0.1882E+01	0.2429E+01
0.3250E+01	0.2500E+00	-0.6121E+03	0.1002E+01	0.2420E+01
0.4250E+01	0.2500E+00	-0.6127E+03	0.5985E+00	0.3200E+01
0.5375E+01	0.2500E+00	-0.5842E+03	0.2066E-01	-0.1109E+02
0.6250E-01	0.7500E+00	-0.2219E+03	-0.1148E+01	-0.2801E+00
0.1875E+00	0.7500E+00	-0.2216E+03	-0.1015E+01	-0.8576E+00
0.3750E+00	0.7500E+00	-0.2217E+03	-0.1320E+01	-0.1599E+01
0.6250E+00	0.7500E+00	-0.2194E+03	-0.1218E+01	-0.2901E+01
0.1000E+01	0.7500E+00	-0.2176E+03	-0.6825E-01	-0.4113E+01
0.1625E+01	0.7500E+00	-0.2148E+03	0.2441E+00	-0.2497E+01
0.2375E+01	0.7500E+00	-0.2094E+03	0.3678E+00	-0.2429E+01
0.3250E+01	0.7500E+00	-0.2066E+03	-0.1173E+01	-0.2420E+01
0.4250E+01	0.7500E+00	-0.1993E+03	0.3700E+01	-0.3200E+01
0.5375E+01	0.7500E+00	-0.2097E+03	-0.1637E+01	0.1109E+02
0.6250E-01	0.1250E+01	0.2219E+03	0.1148E+01	-0.2801E+00
0.1875E+00	0.1250E+01	0.2216E+03	0.1015E+01	-0.8576E+00
0.3750E+00	0.1250E+01	0.2217E+03	0.1320E+01	-0.1599E+01
0.6250E+00	0.1250E+01	0.2194E+03	0.1218E+01	-0.2901E+01
0.1000E+01	0.1250E+01	0.2176E+03	0.6825E-01	-0.4113E+01
0.1625E+01	0.1250E+01	0.2148E+03	-0.2441E+00	-0.2497E+01
0.2375E+01	0.1250E+01	0.2094E+03	-0.3678E+00	-0.2429E+01
0.3250E+01	0.1250E+01	0.2066E+03	0.1173E+01	-0.2420E+01
0.4250E+01	0.1250E+01	0.1993E+03	-0.3700E+01	-0.3200E+01
0.5375E+01	0.1250E+01	0.2097E+03	0.1637E+01	0.1109E+02
0.6250E-01	0.1750E+01	0.6701E+03	0.1195E+01	0.2801E+00
0.1875E+00	0.1750E+01	0.6702E+03	0.1392E+01	0.8576E+00
0.3750E+00	0.1750E+01	0.6670E+03	0.8944E+00	0.1599E+01
0.6250E+00	0.1750E+01	0.6674E+03	0.1988E+01	0.2901E+01
0.1000E+01	0.1750E+01	0.6553E+03	0.8439E+00	0.4113E+01
0.1625E+01	0.1750E+01	0.6363E+03	-0.1668E+01	0.2497E+01
0.2375E+01	0.1750E+01	0.6370E+03	0.1882E+01	0.2429E+01
0.3250E+01	0.1750E+01	0.6121E+03	-0.1002E+01	0.2420E+01
0.4250E+01	0.1750E+01	0.6127E+03	-0.5985E+00	0.3200E+01
0.5375E+01	0.1750E+01	0.5842E+03	-0.2066E-01	-0.1109E+02

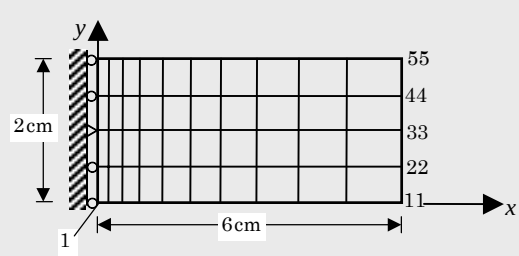

PROPRIETARY MATERIAL. © The McGraw-Hill Companies, Inc. All rights reserved.

Problem 13.60: Analyze the plane elasticity problem in Fig. P11.7 for natural frequencies. Use a density of $\rho = 0.0088$ kg/cm^3.

Solution: The input data and partial output are included in Box 13.60.

Box 13.60: Input data and partial output for the vibration analysis of the plane stress problem in Fig. P11.7 (nonuniform mesh of 10×4 rectangular elements is used).

```
Problem 13.60: Vibration of a cantilever plate using plane stress element
    2   1   2   1                                  ITYPE,IGRAD,ITEM,NEIGN
   10   0                                          NVALU, NVCTR
    1   4   1   0                                  IELTYP,NPE,MESH,NPRNT
    10  4                                          NX, NY
    0.0 0.125 0.125 0.25 0.25 0.5 0.75 0.75
    1.0 1.0   1.25                                 X0,DX(I)
    0.0 0.5  0.5  0.5  0.5                         Y0,DY(I)
    6                                              NSPV
    1  1   12 1   23 1   23 2   34 1   45 1        ISPV
    1                                              LNSTRS
    30.0E06  30.0E06  0.3  11.53846E06  1.0        E1,E2,ANU12,G12,THKNS
     0.0088   0.0     0.0                          C0, CX, CY

       ____________________________________________________________
             OUTPUT  from  program *** FEM2D *** by J. N. REDDY
       ____________________________________________________________
       MATERIAL PROPERTIES OF THE SOLID ANALYZED:

          Thickness of the body, THKNS ............=  0.1000E+01
          Modulus of elasticity, E1 ...............=  0.3000E+08
          Modulus of elasticity, E2 ...............=  0.3000E+08
          Poisson s ratio, ANU12 ..................=  0.3000E+00
          Shear modulus, G12 ......................=  0.1154E+08

       PARAMETERS OF THE DYNAMIC ANALYSIS:

          Coefficient, C0 .........................=  0.8800E-02
          Coefficient, CX .........................=  0.0000E+00
          Coefficient, CY .........................=  0.0000E+00

   (Only ten frequencies were requested - these are the highest ten)

     Eigenvalue(  1) =   0.126100E+13   Frequency =  0.11229E+07
     Eigenvalue(  2) =   0.123934E+13   Frequency =  0.11133E+07
     Eigenvalue(  3) =   0.121864E+13   Frequency =  0.11039E+07
     Eigenvalue(  4) =   0.120075E+13   Frequency =  0.10958E+07
     Eigenvalue(  5) =   0.119229E+13   Frequency =  0.10919E+07
     Eigenvalue(  6) =   0.887367E+12   Frequency =  0.94200E+06
     Eigenvalue(  7) =   0.875914E+12   Frequency =  0.93590E+06
     Eigenvalue(  8) =   0.774362E+12   Frequency =  0.87998E+06
     Eigenvalue(  9) =   0.773088E+12   Frequency =  0.87925E+06
     Eigenvalue( 10) =   0.531354E+12   Frequency =  0.72894E+06
```

PROPRIETARY MATERIAL. ©The McGraw-Hill Companies, Inc. All rights reserved.

Problem 13.67: Analyze the plate problem in Fig. P12.2 using (*a*) 2×4 and (*b*) 4×8 meshes of CPT(N) elements in the half-plate, and compare the maximum deflections and stresses. Use $E = 10^7$ psi, $\nu = 0.25$, $h = 0.25$ in. and $q_0 = 10$ lb/in.

Solution: Note that a plate strip of unit width along the x-axis may be modeled. The input data and partial output are included in Boxes 13.67a and 13.67b.

Box 13.67a: Input data and partial output for the plate problem in Fig. P12.2 (uniform mesh of 2×4 elements is used).

```
Problem 13.67a: Bending of a cantilever plate--CPT(N)
4   1   0   0                              ITYPE,IGRAD,ITEM,NEIGN
1   4   1   0                              IEL, NPE, MESH, NPRNT
2   4                                      NX, NY
0.0  2.5  2.5                              X0, DX(I)
0.0  2.5  2.5  2.5  2.5                    Y0, DY(I)
9                                          NSPV
1  1   1  2   1  3   2  1   2  2   2  3
3  1   3  2   3  3                         ISPV(I,J)
0.0    0.0    0.0    0.0    0.0    0.0
0.0    0.0    0.0                         VSPV(I)
3                                          NSSV
13  1  14  1  15  1                        ISSV(I,J)
12.5   25.0   12.5                        VSSV(I)
1.0E7 1.0E7 0.25 0.4E7 0.4E7 0.4E7 0.25    E1,E2,ANU12,G12,...
0.0   0.0   0.0                            F0, FX, FY
```

Node	x-coord.	y-coord.	deflec. w	x-rotation	y-rotation
4	0.00000E+00	0.25000E+01	0.19679E-01	0.31193E-02	0.19671E-01
5	0.25000E+01	0.25000E+01	0.22091E-01	0.75123E-16	0.20484E-01
6	0.50000E+01	0.25000E+01	0.19679E-01	-0.31193E-02	0.19671E-01
7	0.00000E+00	0.50000E+01	0.75492E-01	0.26409E-02	0.34988E-01
8	0.25000E+01	0.50000E+01	0.78068E-01	0.16786E-15	0.34732E-01
9	0.50000E+01	0.50000E+01	0.75492E-01	-0.26409E-02	0.34988E-01
10	0.00000E+00	0.75000E+01	0.15559E+00	0.16643E-02	0.44033E-01
11	0.25000E+01	0.75000E+01	0.15731E+00	0.27205E-15	0.43639E-01
12	0.50000E+01	0.75000E+01	0.15559E+00	-0.16643E-02	0.44033E-01
13	0.00000E+00	0.10000E+02	0.24768E+00	0.91430E-03	0.47094E-01
14	0.25000E+01	0.10000E+02	0.24878E+00	0.20634E-15	0.46846E-01
15	0.50000E+01	0.10000E+02	0.24768E+00	-0.91430E-03	0.47094E-01

x-coord.	y-coord.	sigma-x	sigma-y	sigma-xy
0.5283E+00	0.5283E+00	-0.1789E+04	-0.8624E+04	-0.1198E+04
0.5283E+00	0.1972E+01	-0.5910E+03	-0.7845E+04	-0.1498E+04
0.1972E+01	0.5283E+00	-0.2230E+04	-0.9562E+04	-0.4551E+02
0.1972E+01	0.1972E+01	-0.1294E+04	-0.7569E+04	-0.3459E+03

PROPRIETARY MATERIAL. © The McGraw-Hill Companies, Inc. All rights reserved.

Box 13.67b: Input data and partial output for the plate problem in Fig. P12.2 (uniform mesh of 4×8 CPT(N) elements is used).

```
Problem 13.67b: Bending of a cantilever plate--CPT(N)
   4   1   0   0                                ITYPE,IGRAD,ITEM,NEIGN
   1   4   1   0                                IEL, NPE, MESH, NPRNT
   4   8                                        NX, NY
   0.0  1.25  1.25  1.25  1.25                  X0, DX(I)
   0.0  1.25  1.25  1.25  1.25
        1.25  1.25  1.25  1.25                  Y0, DY(I)
   15                                           NSPV
   1  1   1  2   1  3   2  1   2  2   2  3
   3  1   3  2   3  3   4  1   4  2   4  3
   5  1   5  2   5  3                            ISPV(I,J)
   0.0    0.0    0.0    0.0    0.0    0.0
   0.0    0.0    0.0    0.0    0.0    0.0
   0.0    0.0    0.0                            VSPV(I)
   5                                            NSSV
   41  1  42  1  43  1  44  1  45  1             ISSV(I,J)
   6.25   12.5   12.5   12.5   6.25             VSSV(I)
   1.0E7 1.0E7 0.25 0.4E7 0.4E7 0.4E7 0.25      E1,E2,ANU12,G12,...
   0.0   0.0   0.0                              F0, FX, FY
```

Node	x-coord.	y-coord.	deflec. w	x-rotation	y-rotation
6	0.00000E+00	0.12500E+01	0.45692E-02	0.10728E-02	0.48607E-02
7	0.12500E+01	0.12500E+01	0.56632E-02	0.22657E-03	0.54417E-02
8	0.25000E+01	0.12500E+01	0.58457E-02	-0.34104E-15	0.56179E-02
9	0.37500E+01	0.12500E+01	0.56632E-02	-0.22657E-03	0.54417E-02
10	0.50000E+01	0.12500E+01	0.45692E-02	-0.10728E-02	0.48607E-02
15	0.50000E+01	0.25000E+01	0.19435E-01	-0.14134E-02	0.98734E-02
20	0.50000E+01	0.37500E+01	0.43563E-01	-0.14550E-02	0.14111E-01
25	0.50000E+01	0.50000E+01	0.75357E-01	-0.13065E-02	0.17546E-01
30	0.50000E+01	0.62500E+01	0.11323E+00	-0.10749E-02	0.20196E-01
35	0.50000E+01	0.75000E+01	0.15563E+00	-0.82104E-03	0.22069E-01
40	0.50000E+01	0.87500E+01	0.20100E+00	-0.59641E-03	0.23171E-01
41	0.00000E+00	0.10000E+02	0.24783E+00	0.46503E-03	0.23543E-01
42	0.12500E+01	0.10000E+02	0.24863E+00	0.30049E-03	0.23485E-01
43	0.25000E+01	0.10000E+02	0.24894E+00	-0.65314E-14	0.23473E-01
44	0.37500E+01	0.10000E+02	0.24863E+00	-0.30049E-03	0.23485E-01
45	0.50000E+01	0.10000E+02	0.24783E+00	-0.46503E-03	0.23543E-01

x-coord.	y-coord.	sigma-x	sigma-y	sigma-xy
0.2642E+00	0.2642E+00	-0.1557E+04	-0.7856E+04	-0.1596E+04
0.2642E+00	0.9858E+00	-0.6436E+03	-0.8642E+04	-0.2455E+04
0.9858E+00	0.2642E+00	-0.2176E+04	-0.9368E+04	-0.3455E+03
0.9858E+00	0.9858E+00	-0.1526E+04	-0.8578E+04	-0.1204E+04

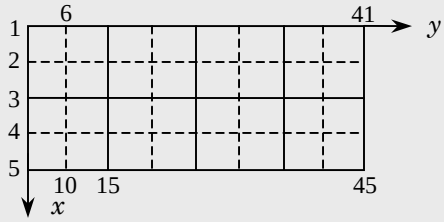

PROPRIETARY MATERIAL. © The McGraw-Hill Companies, Inc. All rights reserved.

Problem 13.69: Repeat Problem 13.67 with an 4×8 mesh of linear plate elements and a 2×4 mesh of nine-node quadratic plate elements based on the first-order plate theory.

Solution: The input data and partial output are included in Boxes 13.69a and 13.69b.

Box 13.69a: Input data and partial output for the plate problem in Fig. P12.2 (uniform mesh of 4×8 of Q4 elements is used).

```
Problem 13.69a: Bending of a cantilever plate--SDT
   3   1   0   0                              ITYPE,IGRAD,ITEM,NEIGN
   1   4   1   0                              IEL, NPE, MESH, NPRNT
   4   8                                      NX, NY
   0.0  1.25  1.25  1.25  1.25                X0, DX(I)
   0.0  1.25  1.25  1.25  1.25
        1.25  1.25  1.25  1.25                Y0, DY(I)
   15                                         NSPV
   1  1   1  2   1  3   2  1   2  2   2  3
   3  1   3  2   3  3   4  1   4  2   4  3
   5  1   5  2   5  3                         ISPV(I,J)
   0.0    0.0    0.0    0.0    0.0    0.0
   0.0    0.0    0.0    0.0    0.0    0.0
   0.0    0.0    0.0                         VSPV(I)
   5                                          NSSV
   41  1  42  1  43  1  44  1  45  1          ISSV(I,J)
   6.25   12.5   12.5   12.5   6.25          VSSV(I)
   1.0E7 1.0E7 0.25 0.4E7 0.4E7 0.4E7 0.25   E1,E2,ANU12,G12,...
   0.0   0.0   0.0                            F0, FX, FY
```

Node	x-coord.	y-coord.	deflec. w	x-rotation	y-rotation
10	0.50000E+01	0.12500E+01	0.44671E-02	0.17611E-02	-0.78276E-02
15	0.50000E+01	0.25000E+01	0.19099E-01	0.23954E-02	-0.15928E-01
20	0.50000E+01	0.37500E+01	0.43181E-01	0.24843E-02	-0.22636E-01
25	0.50000E+01	0.50000E+01	0.74983E-01	0.21559E-02	-0.28075E-01
30	0.50000E+01	0.62500E+01	0.11286E+00	0.17640E-02	-0.32297E-01
41	0.00000E+00	0.10000E+02	0.24742E+00	-0.68934E-03	-0.37657E-01
42	0.12500E+01	0.10000E+02	0.24815E+00	-0.47107E-03	-0.37669E-01
43	0.25000E+01	0.10000E+02	0.24845E+00	-0.18010E-14	-0.37563E-01
44	0.37500E+01	0.10000E+02	0.24815E+00	0.47107E-03	-0.37669E-01
45	0.50000E+01	0.10000E+02	0.24742E+00	0.68934E-03	-0.37657E-01

x-coord.	y-coord.	sigma-x sigma-xz	sigma-y sigma-yz	sigma-xy
0.6250E+00	0.6250E+00	-0.1319E+04 -0.7114E+02	-0.8449E+04 -0.7884E+02	-0.5037E+03
0.1875E+01	0.6250E+00	-0.2301E+04 -0.7114E+02	-0.9551E+04 0.1748E+03	-0.2611E+03
0.3125E+01	0.6250E+00	-0.2301E+04 0.7114E+02	-0.9551E+04 0.1748E+03	0.2611E+03
0.4375E+01	0.6250E+00	-0.1319E+04 0.7114E+02	-0.8449E+04 -0.7884E+02	0.5037E+03

PROPRIETARY MATERIAL. ©The McGraw-Hill Companies, Inc. All rights reserved.

Box 13.69b: Input data and partial output for the plate problem in Fig. P12.2 (uniform mesh of 2×4 of Q9 elements is used).

```
Problem 13.69b: Bending of a cantilever plate--FSDT
   3   1   0   0                              ITYPE,IGRAD,ITEM,NEIGN
   2   9   1   0                              IEL, NPE, MESH, NPRNT
   2   4                                      NX, NY
   0.0  2.5   2.5                             X0, DX(I)
   0.0  2.5   2.5  2.5  2.5                   Y0, DY(I)
   15                                         NSPV
   1  1   1  2   1  3   2  1   2  2   2  3
   3  1   3  2   3  3   4  1   4  2   4  3
   5  1   5  2   5  3                         ISPV(I,J)
   0.0    0.0    0.0    0.0    0.0    0.0
   0.0    0.0    0.0    0.0    0.0    0.0
   0.0    0.0    0.0                         VSPV(I)
   5                                          NSSV
   41  1  42  1  43  1  44  1  45  1          ISSV(I,J)
   6.25   12.5   12.5   12.5   6.25           VSSV(I)
   1.0E7 1.0E7 0.25 0.4E7 0.4E7 0.4E7 0.25    E1,E2,ANU12,G12,...
   0.0   0.0   0.0                            F0, FX, FY
```

Node	x-coord.	y-coord.	deflec. w	x-rotation	y-rotation
10	0.50000E+01	0.12500E+01	0.44331E-02	0.18711E-02	-0.80203E-02
15	0.50000E+01	0.25000E+01	0.19219E-01	0.24401E-02	-0.16063E-01
20	0.50000E+01	0.37500E+01	0.43537E-01	0.24463E-02	-0.22652E-01
25	0.50000E+01	0.50000E+01	0.75537E-01	0.21228E-02	-0.28099E-01
30	0.50000E+01	0.62500E+01	0.11358E+00	0.17336E-02	-0.32312E-01
40	0.50000E+01	0.87500E+01	0.20176E+00	0.85669E-03	-0.37089E-01
41	0.00000E+00	0.10000E+02	0.24885E+00	-0.32113E-03	-0.37601E-01
42	0.12500E+01	0.10000E+02	0.24934E+00	-0.41224E-03	-0.37695E-01
43	0.25000E+01	0.10000E+02	0.24972E+00	-0.30984E-13	-0.37504E-01
44	0.37500E+01	0.10000E+02	0.24934E+00	0.41224E-03	-0.37695E-01
45	0.50000E+01	0.10000E+02	0.24885E+00	0.32113E-03	-0.37601E-01

x-coord.	y-coord.	sigma-x sigma-xz	sigma-y sigma-yz	sigma-xy
0.5283E+00	0.5283E+00	-0.1224E+04 -0.5876E+02	-0.8471E+04 -0.5962E+02	-0.5521E+03
0.5283E+00	0.1972E+01	-0.2164E+03 -0.3272E+02	-0.7983E+04 0.3187E+02	-0.3795E+03
0.1972E+01	0.5283E+00	-0.2372E+04 -0.8276E+02	-0.9714E+04 0.1556E+03	-0.2572E+03
0.1972E+01	0.1972E+01	-0.1279E+04 -0.8725E+01	-0.7431E+04 0.6413E+02	-0.4473E+03

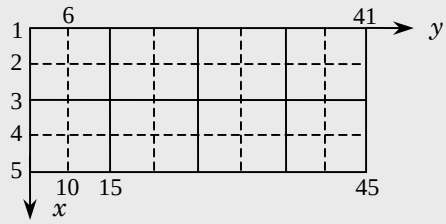

PROPRIETARY MATERIAL. © The McGraw-Hill Companies, Inc. All rights reserved.

Problem 13.70: Analyze the plate bending problem in Fig. P12.3 with the CPT (C) elements. Use the mesh shown in the figure, and take $E = 10^7$ psi, $\nu = 0.25$, $h = 0.25$ in. and $q_0 = 10$ lb/in^2.

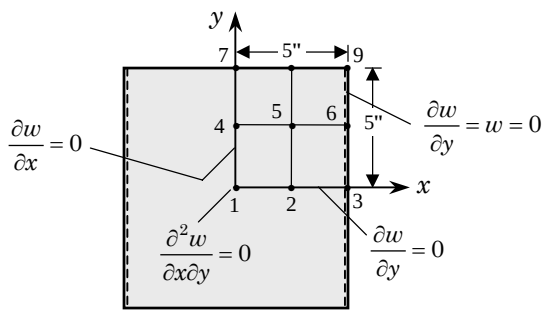

Solution: The input data and partial output are included in Box 13.70 for 2×2 mesh of CPT(C) elements. We take $a = b = 10$ in.

Box 13.70: Input data and partial output for the plate problem of Fig. P12.3.

```
    Problem 13.70: Bending of a square plate (Prob 12.3)--CPT(C)
    5   1   0   0                              ITYPE,IGRAD,ITEM,NEIGN
    1   4   1   0                              IEL, NPE, MESH, NPRNT
    2   2                                      NX, NY
    0.0  2.5   2.5                             X0, DX(I)
    0.0  2.5   2.5                             Y0, DY(I)
    12                                         NSPV
    1  2   1  3   1  4   2  3   3  1   3  3
    4  2   6  1   6  3   7  2   9  1   9  3   ISPV(I,J)
    0.0    0.0    0.0    0.0    0.0    0.0
    0.0    0.0    0.0    0.0    0.0    0.0
    0                                          NSSV
    1.0E7 1.0E7 0.25 0.4E7 0.4E7 0.4E7 0.25    E1,E2,ANU12,G12,…,THKNS
    10.0   0.0   0.0                           F0, FX, FY

Node    x-coord.      y-coord.     deflec. w    x-rotation    y-rotation

  1   0.00000E+00   0.00000E+00   0.10189E+00   0.00000E+00   0.00000E+00
  2   0.25000E+01   0.00000E+00   0.71852E-01  -0.28389E-01   0.00000E+00
  3   0.50000E+01   0.00000E+00   0.00000E+00  -0.40707E-01   0.00000E+00
  4   0.00000E+00   0.25000E+01   0.10507E+00   0.00000E+00   0.24985E-02
  5   0.25000E+01   0.25000E+01   0.73270E-01  -0.28671E-01   0.14430E-02
  6   0.50000E+01   0.25000E+01   0.00000E+00  -0.40833E-01   0.00000E+00
  7   0.00000E+00   0.50000E+01   0.11635E+00   0.00000E+00   0.73965E-04
  8   0.25000E+01   0.50000E+01   0.79587E-01  -0.30646E-01   0.43428E-02
  9   0.50000E+01   0.50000E+01   0.00000E+00  -0.44033E-01   0.00000E+00

        x-coord.     y-coord.     sigma-x      sigma-y     sigma-xy
      0.5283E+00   0.5283E+00   0.1284E+05   0.2055E+04   0.8893E+03
```

PROPRIETARY MATERIAL. ©The McGraw-Hill Companies, Inc. All rights reserved.

Problem 13.71: Analyze the plate bending problem in Fig. P12.4 with the CPT (C) elements. Use the mesh shown in the figure, and take $E = 10^7$ psi, $\nu = 0.25$, $h = 0.25$ in. and $q_0 = 10$ lb/in^2.

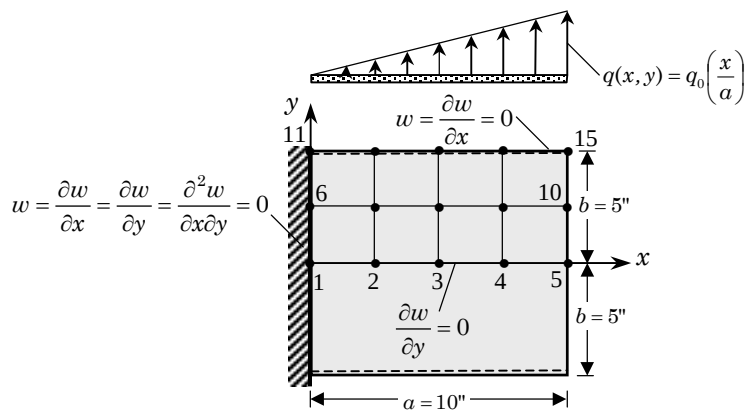

Solution: The input data and partial output are included in Box 13.71 for 4×2 mesh of CPT(C) elements. We take $a = 10$ in. and $b = 5$ in.

Box 13.71: Input data and partial output for the plate problem of Fig. P12.4.

```
    Problem 13.71: Bending of a rectangular plate--CPT(C)
    5   1   0   0                              ITYPE,IGRAD,ITEM,NEIGN
    1   4   1   0                              IEL, NPE, MESH, NPRNT
    4   2                                      NX, NY
    0.0  2.5   2.5   2.5   2.5                 X0, DX(I)
    0.0  2.5   2.5                             Y0, DY(I)
    24                                         NSPV
    1  1   1  2   1  3   1  4   2  3   3  3
    4  3   5  3   6  1   6  2   6  3   6  4
    11 1  11  2  11  3  11  4  12  1  12  2
    13 1  13  2  14  1  14  2  15  1  15  2   ISPV(I,J)
    0.0    0.0    0.0    0.0    0.0    0.0
    0.0    0.0    0.0    0.0    0.0    0.0
    0.0    0.0    0.0    0.0    0.0    0.0
    0.0    0.0    0.0    0.0    0.0    0.0    VSPV(I)
    0                                          NSSV
    1.0E7 1.0E7 0.25 0.4E7 0.4E7 0.4E7 0.25   E1,E2,ANU12,G12,...
    0.0   0.5   0.0                            F0, FX, FY
Node    x-coord.      y-coord.     deflec. w    x-rotation    y-rotation
  1   0.00000E+00   0.00000E+00   0.00000E+00   0.00000E+00   0.00000E+00
  2   0.25000E+01   0.00000E+00   0.48452E-02   0.43387E-02   0.00000E+00
  3   0.50000E+01   0.00000E+00   0.13736E-01   0.49391E-02   0.00000E+00
  4   0.75000E+01   0.00000E+00   0.22636E-01   0.43107E-02   0.00000E+00
  5   0.10000E+02   0.00000E+00   0.31321E-01   0.27373E-02   0.00000E+00

        x-coord.     y-coord.     sigma-x      sigma-y     sigma-xy
      0.5283E+00   0.5283E+00  -0.2276E+04  -0.4638E+03  -0.8866E+02
      0.9472E+01   0.1972E+01   0.5033E+03   0.2797E+04   0.1672E+04
      0.4472E+01   0.4472E+01   0.8189E+02   0.3101E+03   0.2266E+04
```

PROPRIETARY MATERIAL. ©The McGraw-Hill Companies, Inc. All rights reserved.

Problem 13.72: Analyze the plate bending problem in Fig. P12.8 with the CPT (C) elements. Use the data shown in the figure.

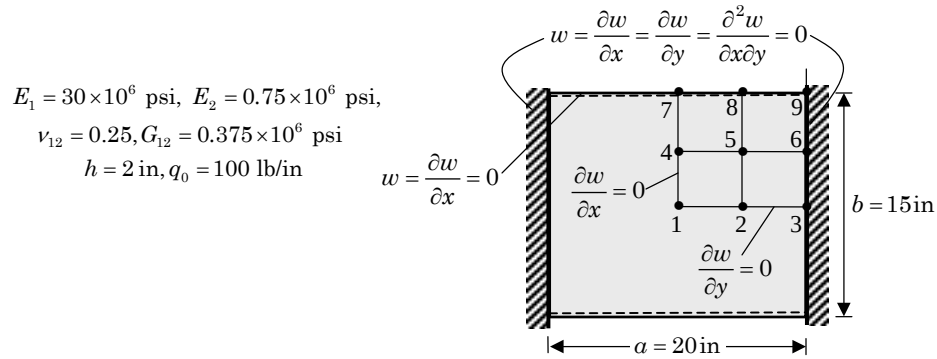

Solution: The input data and partial output are included in Box 13.72 for 2×2 mesh of CPT(C) elements.

Box 13.72: Input data and partial output for the plate problem of Fig. P12.8.

```
   Problem 13.72: Bending of a rectangular plate (Prob 12.8)--CPT(C)
   5   1   0   0                              ITYPE,IGRAD,ITEM,NEIGN
   1   4   1   0                              IEL, NPE, MESH, NPRNT
   2   2                                      NX, NY
   0.0  5.0   5.0                             X0, DX(I)
   0.0  3.75  3.75                            Y0, DY(I)
   21                                         NSPV
   1  2   1  3   1  4   2  3   3  1   3  2
   3  3   3  4   4  2   6  1   6  2   6  3
   6  4   7  1   7  2   8  1   8  2   9  1
   9  2   9  3   9  4                         ISPV(I,J)
   0.0    0.0    0.0    0.0    0.0    0.0
   0.0    0.0    0.0    0.0    0.0    0.0
   0.0    0.0    0.0    0.0    0.0    0.0
   0.0    0.0    0.0                         VSPV(I)
   0                                          NSSV
   30.0E6 0.75E6 0.25 0.375E6 0.375E6 0.375E6
    2.0                                  E1,E2,ANU12,G12,G13,G23,THKNS
   100.0  0.0   0.0                           F0, FX, FY

Node    x-coord.      y-coord.     deflec. w    x-rotation    y-rotation
  1   0.00000E+00   0.00000E+00   0.24556E-02   0.00000E+00   0.00000E+00
  2   0.50000E+01   0.00000E+00   0.13258E-02  -0.93499E-03   0.00000E+00
  3   0.10000E+02   0.00000E+00   0.00000E+00   0.00000E+00   0.00000E+00
  4   0.00000E+00   0.37500E+01   0.22172E-02   0.00000E+00  -0.79161E-03
  5   0.50000E+01   0.37500E+01   0.12060E-02  -0.82624E-03  -0.18107E-03

        x-coord.     y-coord.     sigma-x      sigma-y     sigma-xy
      0.8943E+01   0.7925E+00  -0.3918E+04  -0.2247E+02   0.2886E+01
      0.1057E+01   0.6708E+01  -0.1055E+04   0.1729E+03  -0.1011E+03
      0.6057E+01   0.6708E+01  -0.2332E+01   0.3950E+02  -0.1784E+03
```

PROPRIETARY MATERIAL. ©The McGraw-Hill Companies, Inc. All rights reserved.

Problem 13.73: Analyze the plate bending problem in Fig. P12.3 with the SDT elements. Use the mesh shown in the figure, and take $E = 10^7$ psi, $\nu = 0.25$, $h = 0.25$ in. and $q_0 = 10$ lb/in^2.

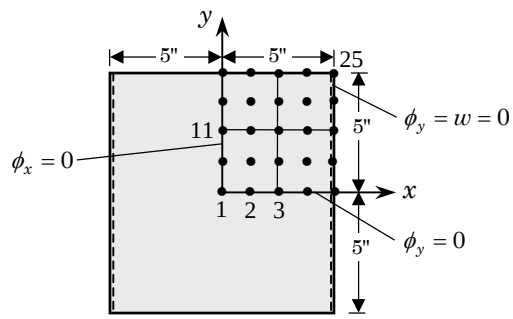

Solution: The input data and partial output are included in Box 13.73 for 2×2 mesh of quadratic SDT elements. We take $a = b = 10$ in.

Box 13.73: Input data and partial output for the plate problem of Fig. P12.3.

Node	x-coord.	y-coord.	deflec. w	x-rotation	y-rotation
1	0.00000E+00	0.00000E+00	0.93767E-01	0.00000E+00	0.00000E+00
2	0.12500E+01	0.00000E+00	0.86732E-01	0.10873E-01	0.00000E+00
3	0.25000E+01	0.00000E+00	0.66813E-01	0.20349E-01	0.00000E+00
4	0.37500E+01	0.00000E+00	0.36340E-01	0.27044E-01	0.00000E+00
5	0.50000E+01	0.00000E+00	0.00000E+00	0.29577E-01	0.00000E+00
6	0.00000E+00	0.12500E+01	0.94247E-01	0.00000E+00	-0.81810E-03
10	0.50000E+01	0.12500E+01	0.00000E+00	0.30301E-01	0.00000E+00
11	0.00000E+00	0.25000E+01	0.95918E-01	0.00000E+00	-0.18977E-02
15	0.50000E+01	0.25000E+01	0.00000E+00	0.30226E-01	0.00000E+00
16	0.00000E+00	0.37500E+01	0.99196E-01	0.00000E+00	-0.35244E-02
20	0.50000E+01	0.37500E+01	0.00000E+00	0.31893E-01	0.00000E+00
21	0.00000E+00	0.50000E+01	0.10514E+00	0.00000E+00	-0.61704E-02
22	0.12500E+01	0.50000E+01	0.97256E-01	0.12163E-01	-0.56916E-02
23	0.25000E+01	0.50000E+01	0.74931E-01	0.22775E-01	-0.44741E-02
24	0.37500E+01	0.50000E+01	0.40758E-01	0.30276E-01	-0.24484E-02
25	0.50000E+01	0.50000E+01	0.00000E+00	0.33118E-01	0.00000E+00

x-coord.	y-coord.	sigma-x sigma-xz	sigma-y sigma-yz	sigma-xy
0.5283E+00	0.5283E+00	0.1165E+05 -0.2085E+02	0.2126E+04 -0.6056E+01	0.5444E+02
0.4472E+01	0.4472E+01	0.2475E+04 -0.3055E+03	0.1225E+03 -0.1762E+01	0.1252E+04

PROPRIETARY MATERIAL. ©The McGraw-Hill Companies, Inc. All rights reserved.

Problem 13.76: Analyze the annular plate in Fig. P12.5 using a four element mesh of CPT(C) elements. Use $E = 10^7$ psi, $\nu = 0.25$, $a = 10$ in., $b = 5$ in., $h = 0.25$ in. and $Q_0 = 1$ lb/in.

Solution: The input data and partial output are included in Box 13.76. **There seems to be a problem with the CPT element as applied to circular plates.** It does not even preserve the symmetry expected (e.g., $w_1 = w_7$, $w_2 = w_8$, etc.) and the maximum deflection is only 60% of that predicted by the SDT element (see the solution to Problem 13.77).

Box 13.76: Input data and partial output for the annular plate problem of Fig. P12.5.

```
Prob 13.76: Bending of a an annular plate under an edge load -- CPT(C)
   5   1   0   0
   1   4   0   0
   4   9
   1   2  5  4
   2   3  6  5
   4   5  8  7
   5   6  9  8
   5.0     0.0     7.5     0.0    10.0     0.0
  3.5355  3.5355  5.3033  5.3033  7.07107 7.07107
   0.0     5.0     0.0     7.5     0.0    10.0
   9
   1 3  2 3  3 1  3 3  6 1  7 2  8 2  9 1  9 2
   0.0  0.0  0.0  0.0  0.0  0.0  0.0  0.0  0.0
   3
   1 1     4 1     7 1
   1.9635  3.927   1.9635
   1.0E7 1.0E7 0.25 0.4E7 0.4E7 0.4E7 0.25
   0.0   0.0   0.0
```

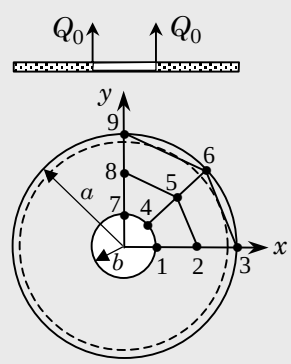

Node	x-coord.	y-coord.	deflec. w	x-rotation	y-rotation
1	0.50000E+01	0.00000E+00	0.61415E-02	-0.15437E-02	0.00000E+00
2	0.75000E+01	0.00000E+00	0.30838E-02	-0.15670E-02	0.00000E+00
3	0.10000E+02	0.00000E+00	0.00000E+00	-0.15629E-02	0.00000E+00
4	0.35355E+01	0.35355E+01	0.50665E-02	-0.12687E-02	-0.87643E-03
5	0.53033E+01	0.53033E+01	0.25292E-02	-0.12284E-02	-0.32587E-03
6	0.70711E+01	0.70711E+01	0.00000E+00	-0.12307E-02	0.86927E-04
7	0.00000E+00	0.50000E+01	0.22195E-02	0.00000E+00	-0.10787E-02
8	0.00000E+00	0.75000E+01	0.10317E-02	0.00000E+00	-0.61397E-03
9	0.00000E+00	0.10000E+02	0.00000E+00	0.00000E+00	0.23336E-03

PROPRIETARY MATERIAL. ©The McGraw-Hill Companies, Inc. All rights reserved.

Problem 13.77: Analyze the annular plate in Fig. P12.5 using a four element mesh of four-node SDT elements. Use $E = 10^7$ psi, $\nu = 0.25$, $a = 10$ in., $b = 5$ in., $h = 0.25$ in. and $Q_0 = 1$ lb/in.

Solution: The input data and partial output are included in Box 13.77.

Box 13.77: Input data and partial output for the annular plate problem of Fig. P12.5.

```
Prob 13.77: Bending of a an annular plate under an edge load (SDT)
3   1   0   0                                  ITYPE,IGRAD,ITEM,NEIGN
1   4   0   0                                  IELTYP,NPE,MESH,NPRNT
4   9                                          NEM, NNM
1   2  5  4
2   3  6  5
4   5  8  7
5   6  9  8                                    NOD(I,J)
5.0     0.0     7.5     0.0    10.0     0.0
3.5355  3.5355  5.3033  5.3033  7.07107 7.07107
0.0     5.0     0.0     7.5     0.0    10.0   GLXY(I,J)
9                                              NSPV
1 3  2 3  3 1  3 3  6 1  7 2  8 2  9 1  9 2   ISPV(I,J)
0.0  0.0  0.0  0.0  0.0  0.0  0.0  0.0  0.0   VSPV(I)
3                                              NSSV
1 1      4 1        7 1                       ISSV
1.9635  3.927    1.9635                 VSSV
1.0E7 1.0E7 0.25 0.4E7 0.4E7 0.4E7 0.25        E1,E2,...
0.0   0.0   0.0                                F0, FX, FY
```

Node	x-coord.	y-coord.	deflec. w	x-rotation	y-rotation
1	0.50000E+01	0.00000E+00	0.10636E-01	0.26574E-02	0.00000E+00
2	0.75000E+01	0.00000E+00	0.51550E-02	0.24775E-02	0.00000E+00
3	0.10000E+02	0.00000E+00	0.00000E+00	0.23526E-02	0.00000E+00
4	0.35355E+01	0.35355E+01	0.10636E-01	0.18791E-02	0.18791E-02
5	0.53033E+01	0.53033E+01	0.51550E-02	0.17518E-02	0.17518E-02
6	0.70711E+01	0.70711E+01	0.00000E+00	0.16635E-02	0.16635E-02
7	0.00000E+00	0.50000E+01	0.10636E-01	0.00000E+00	0.26574E-02
8	0.00000E+00	0.75000E+01	0.51550E-02	0.00000E+00	0.24775E-02
9	0.00000E+00	0.10000E+02	0.00000E+00	0.00000E+00	0.23526E-02

x-coord.	y-coord.	sigma-x sigma-xz	sigma-y sigma-yz	sigma-xy
0.5335E+01	0.2210E+01	0.1117E+03 -0.3641E+01	0.4530E+03 -0.1508E+01	-0.1707E+03
0.7469E+01	0.3094E+01	0.7314E+02 -0.2600E+01	0.3036E+03 -0.1077E+01	-0.1152E+03
0.2210E+01	0.5335E+01	0.4530E+03 -0.1508E+01	0.1117E+03 -0.3641E+01	-0.1707E+03
0.3094E+01	0.7469E+01	0.3036E+03 -0.1077E+01	0.7314E+02 -0.2600E+01	-0.1152E+03

PROPRIETARY MATERIAL. © The McGraw-Hill Companies, Inc. All rights reserved.

Problem 13.78: Analyze the plate problem in Fig. P12.2 for its transient response. Use a mesh of 2×4 CPT(N) elements and $E = 10^7$ psi, $\nu = 0.25$, $\rho = 1$ lb/in^3, $h = 0.25$ in., $q_0 = 10$ lb/in., $\Delta t = 0.05$ and $\alpha = \gamma = 0.5$.

Solution: The input data and partial output are included in Box 13.78. Plot of $w(5, 10, t) = w_{15}(t)$ versus t is presented in the figure.

Box 13.78: Input data file for the transient analysis of the plate problem of Fig. P12.2 (using the CPT(N) element).

```
Problem 13.78: Bending of a cantilever plate--CPT(N)
   4   1   2   0                              ITYPE,IGRAD,ITEM,NEIGN
   1   4   1   0                              IEL, NPE, MESH, NPRNT
   2   4                                      NX, NY
   0.0  2.5  2.5                              X0, DX(I)
   0.0  2.5  2.5  2.5  2.5                    Y0, DY(I)
   9                                          NSPV
   1  1   1  2   1  3   2  1   2  2   2  3
   3  1   3  2   3  3                         ISPV(I,J)
   0.0    0.0    0.0    0.0    0.0    0.0
   0.0    0.0    0.0                         VSPV(I)
   3                                          NSSV
   13  1  14  1  15  1                        ISSV(I,J)
   12.5   25.0   12.5                        VSSV(I)
   1.0E7 1.0E7 0.25 0.4E7 0.4E7 0.4E7 0.25   E1,E2,ANU12,G12,...
   0.0   0.0   0.0                            F0, FX, FY
   1.0   0.0   0.0                            C0, CX, CY
   50  51  1     0                   NTIME,NSTP,INTVL,INTIAL
   0.05  0.5  0.5  1.0E-5            DT,ALFA,GAMA,EPSLN
```

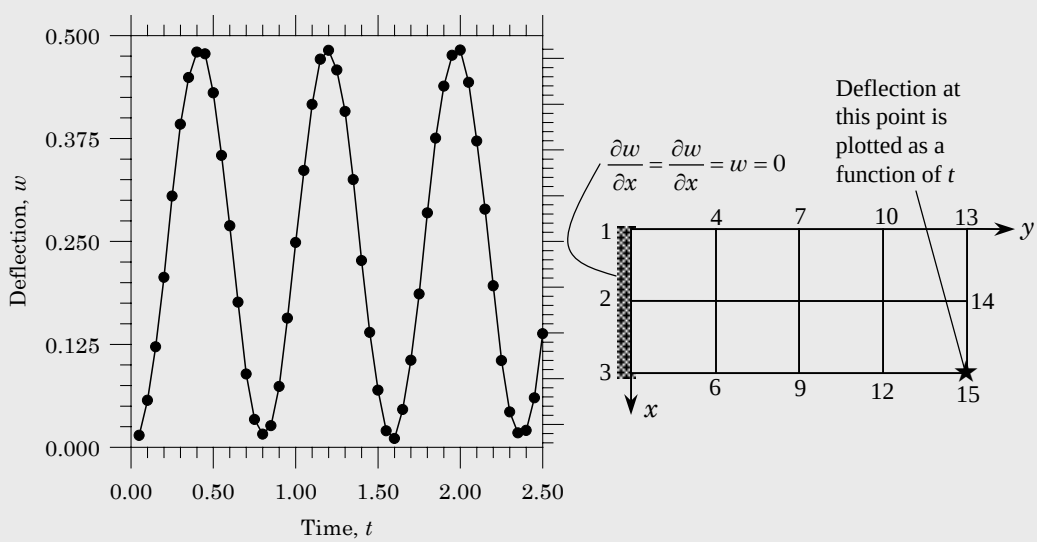

PROPRIETARY MATERIAL. © The McGraw-Hill Companies, Inc. All rights reserved.

Problem 13.80: Determine the transient response of the annular plate in Fig. P12.5 using four SDT elements, $\Delta t = 0.05$, $\rho = 1.0$ and $\alpha = \gamma = 0.5$. Plot the deflection at node 1 as a function of time for at least two periods.

Solution: The input data and partial output are included in Box 13.80. Plot of $w(5, 0, t)$ versus t is presented in the figure.

Box 13.80: Input data file for the transient analysis of annular plate problem of Fig. P12.5.

```
Prob 13.80: Transient analysis of an annular plate (SDT)
3   1   2   0                                ITYPE,IGRAD,ITEM,NEIGN
1   4   0   0                                IELTYP,NPE,MESH,NPRNT
4   9                                       NEM, NNM
    1   2  5  4
2   3  6  5
4   5  8  7
5   6  9  8                                  NOD(I,J)
5.0     0.0     7.5     0.0    10.0     0.0
3.5355  3.5355  5.3033  5.3033  7.07107 7.07107
0.0     5.0     0.0     7.5     0.0    10.0  GLXY(I,J)
9                                            NSPV
1 3  2 3  3 1  3 3  6 1  7 2  8 2  9 1  9 2  ISPV(I,J)
0.0  0.0  0.0  0.0  0.0  0.0  0.0  0.0  0.0  VSPV(I)
3                                            NSSV
1 1      4 1        7 1                      ISSV
1.9635  3.927    1.9635                      VSSV
1.0E7 1.0E7 0.25 0.4E7 0.4E7 0.4E7 0.25      E1,E2,...
0.0   0.0   0.0                              F0, FX, FY
1.0   0.0   0.0                              C0,  CX,  CY
50  51  1     0                    NTIME,NSTP,INTVL,INTIAL
0.05  0.5  0.5  1.0E-5             DT,ALFA,GAMA,EPSLN
```

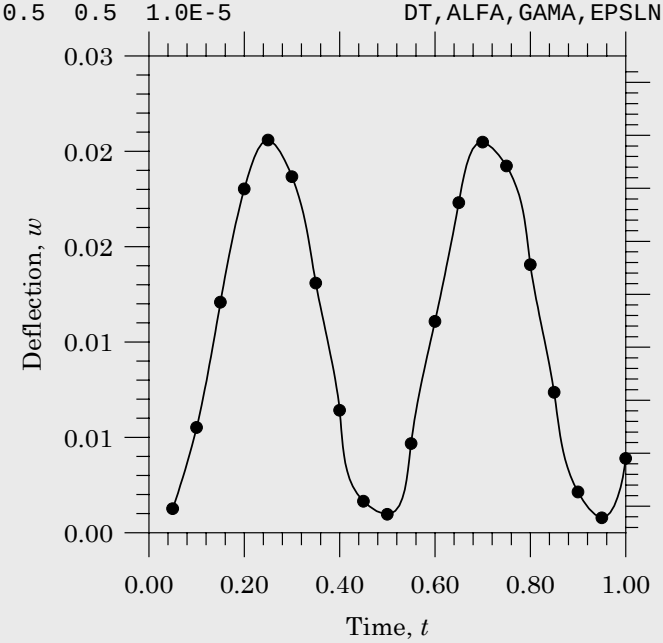

PROPRIETARY MATERIAL. ©The McGraw-Hill Companies, Inc. All rights reserved.

Chapter 14

PRELUDE TO ADVANCED TOPICS

Problem 14.1: Consider the second-order equation

$$-\frac{d}{dx}\left(a\frac{du}{dx}\right) = f \tag{1}$$

and rewrite it as a pair of first-order equations

$$-\frac{du}{dx} + \frac{P}{a} = 0, \quad -\frac{dP}{dx} - f = 0 \tag{2}$$

Construct the weighted-residual finite element model of the equations, and specialize it to the Galerkin model. Assume interpolation in the form

$$u = \sum_{j=1}^{m} u_j \psi_i(x), \quad P = \sum_{j=1}^{n} P_j \phi_j(x) \tag{3}$$

and use the equations in (2) in a sequence that yields symmetric element equations:

$$\begin{bmatrix} [K^{11}] & [K^{12}] \\ [K^{12}]^T & [K^{22}] \end{bmatrix} \begin{Bmatrix} \{u\} \\ \{P\} \end{Bmatrix} = \begin{Bmatrix} \{F^1\} \\ \{F^2\} \end{Bmatrix} \tag{iv}$$

The model can also be called a mixed model because (u, P) are of different kinds.

Solution: The element coefficients are

$$K_{ij}^{11} = 0, \quad K_{ij}^{21} = K_{ji}^{12}, \quad K_{ij}^{12} = \int_{x_a}^{x_b} \frac{d\psi_i}{dx}\frac{d\psi_j}{dx}\, dx$$

$$K_{ij}^{22} = \frac{1}{EI}\int_{x_a}^{x_b} \psi_i \psi_j \, dx, \quad F_i^2 = P_1\psi_i(x_a) + P_2\psi_i(x_b)$$

$$F_i^1 = \int_{x_a}^{x_b} f\psi_i \, dx + Q_1\psi_i(x_a) + Q_2\psi_i(x_b)$$

$$Q_1 = -\left.\frac{dM}{dx}\right|_{x=x_a}, \quad Q_2 = \left.\frac{dM}{dx}\right|_{x=x_b}, \quad P_1 = -\left.\frac{dw}{dx}\right|_{x=x_a}, \quad P_2 = \left.\frac{dw}{dx}\right|_{x=x_b}$$

PROPRIETARY MATERIAL. ©The McGraw-Hill Companies, Inc. All rights reserved.

Problem 14.2: Evaluate the coefficient matrices $[K^{\alpha\beta}]$ in Problem 14.1 for $a =$ constant and column vectors $\{F^\alpha\}$ for $f =$ constant. Assume that $\psi_i = \phi_i$ are the linear interpolation functions. Eliminate $\{P\}$ from the two sets of equations (iv) to obtain an equation of the form

$$[K]\{u\} = \{F\}$$

Compare the coefficient matrix $[K]$ and vector $\{F\}$ with those obtained with the weak form finite element model of (a). What conclusions can you draw?

Solution: The finite-element equations associated with Eq. (b) of Problem 14.1 are given by

$$\frac{1}{2}\begin{bmatrix} 1 & -1 \\ -1 & 1 \end{bmatrix}\begin{Bmatrix} P_1^e \\ P_2^e \end{Bmatrix} = \frac{f_e h_e}{2}\begin{Bmatrix} 1 \\ 1 \end{Bmatrix} + \begin{Bmatrix} Q_1^e \\ Q_2^e \end{Bmatrix}$$

$$\frac{1}{2}\begin{bmatrix} -1 & 1 \\ -1 & 1 \end{bmatrix}\begin{Bmatrix} u_1^e \\ u_2^e \end{Bmatrix} = \frac{h_e}{6a_e}\begin{bmatrix} 2 & 1 \\ 1 & 2 \end{bmatrix}\begin{Bmatrix} P_1^e \\ P_2^e \end{Bmatrix}$$

Problem 14.3: Develop the least-squares finite element model of (2) in Problem 14.1, and compute element coefficient matrices and vectors when $\psi_i = \phi_i$ are the linear interpolation functions.

Solution: The least-squares functional of the two equations in (2) is

$$I = \int_{x_a}^{x_b} \left[\left(-\frac{du}{dx} + \frac{P}{a} \right)^2 + \left(\frac{dP}{dx} + f \right)^2 \right] dx$$

Setting $\delta_u I = 0$ and $\delta_P I = 0$, we obtain the integral statements

$$\delta_u I = 2\int_{x_a}^{x_b} \left[-\frac{d\delta u}{dx}\left(-\frac{du}{dx} + \frac{P}{a} \right) \right] dx = 0 \tag{1}$$

$$\delta_P I = 2\int_{x_a}^{x_b} \left[\frac{\delta P}{a}\left(-\frac{du}{dx} + \frac{P}{a} \right) + \frac{d\delta P}{dx}\left(\frac{dP}{dx} + f \right) \right] dx = 0 \tag{2}$$

Substituting the approximations

$$u = \sum_{j=1}^{m} u_j \psi_i(x), \quad P = \sum_{j=1}^{n} P_j \phi_j(x) \tag{3}$$

into Eqs. (1) and (2), we obtain the finite element model

$$\begin{bmatrix} [K^{11}] & [K^{12}] \\ [K^{12}]^T & [K^{22}] \end{bmatrix}\begin{Bmatrix} \{u\} \\ \{P\} \end{Bmatrix} = \begin{Bmatrix} \{F^1\} \\ \{F^2\} \end{Bmatrix} \tag{4}$$

PROPRIETARY MATERIAL. ©The McGraw-Hill Companies, Inc. All rights reserved.

where the element coefficients are

$$
\begin{aligned}
K_{ij}^{11} &= \int_{x_a}^{x_b} \frac{d\psi_i}{dx}\frac{d\psi_j}{dx}\, dx \\
K_{ij}^{12} &= -\int_{x_a}^{x_b} \frac{1}{a}\frac{d\psi_i}{dx}\phi_j\, dx = K_{ji}^{21} \\
K_{ij}^{22} &= \int_{x_a}^{x_b} \left[\frac{1}{a^2}\phi_i\phi_j + \frac{d\phi_i}{dx}\frac{d\phi_j}{dx}\right] dx \\
F_i^1 &= 0, \quad F_i^2 = -\int_{x_a}^{x_b} \frac{d\phi_i}{dx} f(x)\, dx
\end{aligned} \tag{5}
$$

For the choice of linear interpolation functions for ψ_i and ϕ_i and elementwise constant value of a, the element coefficients in (5) are

$$
\begin{aligned}
&\mathbf{K}^{11} = \frac{1}{h_e}\begin{bmatrix} 1 & -1 \\ -1 & 1 \end{bmatrix}, \quad \mathbf{K}^{12} = \frac{1}{2a_e}\begin{bmatrix} 1 & 1 \\ -1 & -1 \end{bmatrix} \\
&\mathbf{K}^{22} = \frac{h_e}{6a_e^2}\begin{bmatrix} 2 & 1 \\ 1 & 2 \end{bmatrix} + \frac{1}{h_e}\begin{bmatrix} 1 & -1 \\ -1 & 1 \end{bmatrix}
\end{aligned} \tag{6}
$$

Problem 14.4: Solve the problem in Example 3.2.1 using two elements of the least-squares model developed in Problem 14.3. Compare the results with the exact solution and those of the weak form finite element model.

Solution: The governing equation of Example 3.2.1 is slightly more general than Eq. (1) of Problem 14.1. Hence, we consider the more general equation

$$
-\frac{d}{dx}\left(a\frac{du}{dx}\right) + cu = f \tag{1}
$$

and rewrite it as a pair of first-order equations

$$
-\frac{du}{dx} + \frac{P}{a} = 0, \quad -\frac{dP}{dx} + cu - f = 0 \tag{2}
$$

The least-squares functional becomes

$$
I = \int_{x_a}^{x_b} \left[\left(-\frac{du}{dx} + \frac{P}{a}\right)^2 + \left(-\frac{dP}{dx} + cu - f\right)^2\right] dx
$$

Setting $\delta_u I = 0$ and $\delta_P I = 0$, we obtain the integral statements

$$
\delta_u I = 2\int_{x_a}^{x_b} \left[-\frac{d\delta u}{dx}\left(-\frac{du}{dx} + \frac{P}{a}\right) + c\delta u\left(-\frac{dP}{dx} + cu - f\right)\right] dx = 0 \tag{3}
$$

$$
\delta_P I = 2\int_{x_a}^{x_b} \left[\frac{\delta P}{a}\left(-\frac{du}{dx} + \frac{P}{a}\right) - \frac{d\delta P}{dx}\left(-\frac{dP}{dx} + cu - f\right)\right] dx = 0 \tag{4}
$$

PROPRIETARY MATERIAL. ©The McGraw-Hill Companies, Inc. All rights reserved.

For this more general case, the finite element model (4) of Problem 14.3 is still valid with

$$
\begin{aligned}
K_{ij}^{11} &= \int_{x_a}^{x_b} \left(\frac{d\psi_i}{dx}\frac{d\psi_j}{dx} + c^2\psi_i\psi_j \right)\, dx \\
K_{ij}^{12} &= -\int_{x_a}^{x_b} \left(\frac{1}{a}\frac{d\psi_i}{dx}\phi_j + c\psi_i\frac{d\phi_j}{dx} \right) dx = K_{ji}^{21} \\
K_{ij}^{22} &= \int_{x_a}^{x_b} \left[\frac{1}{a^2}\phi_i\phi_j + \frac{d\phi_i}{dx}\frac{d\phi_j}{dx} \right] dx \\
F_i^1 &= \int_{x_a}^{x_b} c\psi_i f(x)\, dx, \quad F_i^2 = -\int_{x_a}^{x_b} \frac{d\phi_i}{dx} f(x)\, dx
\end{aligned} \tag{5}
$$

For the choice of linear interpolation functions for ψ_i and ϕ_i and elementwise constant values of a, c and f, the element coefficients in (5) are

$$
\begin{aligned}
\mathbf{K}^{11} &= \frac{1}{h_e}\begin{bmatrix} 1 & -1 \\ -1 & 1 \end{bmatrix} + \frac{c_e^2 h_e}{6}\begin{bmatrix} 2 & 1 \\ 1 & 2 \end{bmatrix} \\
\mathbf{K}^{12} &= \frac{1}{2a_e}\begin{bmatrix} 1 & 1 \\ -1 & -1 \end{bmatrix} + \frac{c_e}{2}\begin{bmatrix} 1 & -1 \\ 1 & -1 \end{bmatrix} \\
\mathbf{K}^{22} &= \frac{h_e}{6a_e^2}\begin{bmatrix} 2 & 1 \\ 1 & 2 \end{bmatrix} + \frac{1}{h_e}\begin{bmatrix} 1 & -1 \\ -1 & 1 \end{bmatrix}
\end{aligned} \tag{6}
$$

For the problem in Example 3.2.1, we have $a = 1$, $c = -1$ and $f(x) = -x^2$. Hence, the source vector is given by

$$
\begin{aligned}
F_i^1 &= -\int_{x_a}^{x_b} \psi_i(-x^2)\, dx \quad \rightarrow \quad \mathbf{F}^1 = \frac{1}{h_e}\left\{ \begin{matrix} \frac{x_b}{3}(x_b^3 - x_a^3) - \frac{1}{4}(x_b^4 - x_a^4) \\ -\frac{x_a}{3}(x_b^3 - x_a^3) + \frac{1}{4}(x_b^4 - x_a^4) \end{matrix} \right\} \\
F_i^2 &= -\int_{x_a}^{x_b} \frac{d\phi_i}{dx}(-x^2)\, dx \quad \rightarrow \quad \mathbf{F}^2 = -\frac{x_b^3 - x_a^3}{3h_e}\left\{ \begin{matrix} 1 \\ -1 \end{matrix} \right\}
\end{aligned}
$$

The element equations become

$$
\begin{bmatrix}
\frac{1}{h_e} + \frac{h_e}{3} & 0 & -\frac{1}{h_e} + \frac{h_e}{6} & 1 \\
0 & \frac{1}{h_e} + \frac{h_e}{3} & -1 & -\frac{1}{h_e} + \frac{h_e}{6} \\
-\frac{1}{h_e} + \frac{h_e}{6} & -1 & \frac{1}{h_e} + \frac{h_e}{3} & 0 \\
1 & -\frac{1}{h_e} + \frac{h_e}{6} & 0 & \frac{1}{h_e} + \frac{h_e}{3}
\end{bmatrix}
\begin{Bmatrix} u_1 \\ P_1 \\ u_2 \\ P_2 \end{Bmatrix}
=
\begin{Bmatrix} F_1^1 \\ F_1^2 \\ F_2^1 \\ F_2^2 \end{Bmatrix}
$$

Using $h_1 = h_2 = 0.5$, the element equations become

$$
\frac{1}{12}\begin{bmatrix}
26 & 0 & -23 & 12 \\
0 & 26 & -12 & -23 \\
-23 & -12 & 26 & 0 \\
12 & -23 & 0 & 26
\end{bmatrix}
\begin{Bmatrix} u_1 \\ P_1 \\ u_2 \\ P_2 \end{Bmatrix}
=
\begin{Bmatrix} F_1^1 \\ F_1^2 \\ F_2^1 \\ F_2^2 \end{Bmatrix}
$$

PROPRIETARY MATERIAL. ©The McGraw-Hill Companies, Inc. All rights reserved.

The assembled equations of the two-element mesh is

$$\frac{1}{12}\begin{bmatrix} 26 & 0 & -23 & 12 & 0 & 0 \\ 0 & 26 & -12 & -23 & 0 & 0 \\ -23 & -12 & 52 & 0 & -23 & 12 \\ 12 & -23 & 0 & 52 & -12 & -23 \\ 0 & 0 & -23 & -12 & 26 & 0 \\ 0 & 0 & 12 & -23 & 0 & 26 \end{bmatrix}\begin{Bmatrix} U_1 \\ U_2 \\ U_3 \\ U_4 \\ U_5 \\ U_6 \end{Bmatrix} = \frac{1}{96}\begin{Bmatrix} 1 \\ -8 \\ 14 \\ -48 \\ 17 \\ 56 \end{Bmatrix}$$

Using the boundary conditions $U_1 = U_5 = 0$, we obtain the condensed equations

$$\frac{1}{12}\begin{bmatrix} 26 & -12 & -23 & 0 \\ -12 & 52 & 0 & 12 \\ -23 & 0 & 52 & -23 \\ 0 & 12 & -23 & 26 \end{bmatrix}\begin{Bmatrix} U_2 \\ U_3 \\ U_4 \\ U_6 \end{Bmatrix} = \frac{1}{12}\begin{Bmatrix} -1.00 \\ 1.75 \\ -6.00 \\ 7.00 \end{Bmatrix}$$

whose solution is

$$U_2 = -0.11453, \quad U_3 = -0.04746, \quad U_4 = -0.06122, \quad U_6 = 0.23698$$

The two-element weak form solution for U_3 is $U_3 = -0.03977$. The exact value is $u(0.5) = 0.04076$.

Problem 14.5: Show that the mixed finite element model of the Euler–Bernoulli beam theory, (14.2.47a), is the same as that in Eq. (5.2.18) for the choice of linear interpolation of w and M.

Solution: For linear interpolation of w and M and element-wise constant values of EI, the element matrices in (14.2.47a) become

$$[K^e] = \frac{1}{h_e}\begin{bmatrix} 1 & -1 \\ -1 & 1 \end{bmatrix}, \quad [G^e] = \frac{h_e}{6E_eI_e}\begin{bmatrix} 2 & 1 \\ 1 & 2 \end{bmatrix}, \quad \{f^e\} = \begin{Bmatrix} f_1^e \\ f_2^e \end{Bmatrix}$$

$$[G^e]^{-1} = \frac{2E_eI_e}{h_e}\begin{bmatrix} 2 & -1 \\ -1 & 2 \end{bmatrix}, \quad [G^e]^{-1}[K^e]^{\mathrm{T}} = \frac{6E_eI_e}{h_e^2}\begin{bmatrix} 1 & -1 \\ -1 & 1 \end{bmatrix}$$

$$[K^e][G^e]^{-1}[K^e]^{\mathrm{T}} = \frac{12E_eI_e}{h_e^3}\begin{bmatrix} 1 & -1 \\ -1 & 1 \end{bmatrix}, \quad [G^e]^{-1}[K^e]^{\mathrm{T}} = \Big([K^e][G^e]^{-1}\Big)^{\mathrm{T}}$$

Hence, we have from Eq. (14.2.47a) the result

$$\frac{2E_eI_e}{h_e^3}\begin{bmatrix} 6 & -3h_e & -6 & -3h_e \\ -3h_e & 2h_e^2 & 3h_e & h_e^2 \\ -6 & 3h_e & 6 & 3h_e \\ -3h_e & h_e^2 & 3h_e & 2h_e^2 \end{bmatrix}\begin{Bmatrix} w_1^e \\ \Theta_1^e \\ w_2^e \\ \Theta_2^e \end{Bmatrix} = \begin{Bmatrix} q_1^e \\ 0 \\ q_2^e \\ 0 \end{Bmatrix} + \begin{Bmatrix} Q_1^e \\ Q_2^e \\ Q_3^e \\ Q_4^e \end{Bmatrix}$$

Interestingly, the stiffness matrix of the mixed finite element model with linear interpolation of both w and M is the same as that of the displacement finite element

PROPRIETARY MATERIAL. ©The McGraw-Hill Companies, Inc. All rights reserved.

model derived in Chapter 5 using the C^1 (Hermite cubic) interpolation. However, the load vector differs in the sense that the mixed model does not contain contributions of distributed load $q(x)$ to the nodal moment components.

Problem 14.6: Consider the pair of equations

$$\nabla u - \mathbf{q}/k = 0, \quad \nabla \cdot \mathbf{q} + f = 0 \quad \text{in} \quad \Omega$$

where u and $\mathbf{q}$ are the dependent variables, and k and f are given functions of position (x, y) in a two-dimensional domain Ω. Derive the finite element formulation of the equations in the form

$$\begin{bmatrix} [K^{11}] & [K^{12}] & [K^{13}] \\ & [K^{22}] & [K^{23}] \\ \text{symmetric} & & [K^{33}] \end{bmatrix} \begin{Bmatrix} \{u\} \\ \{q^1\} \\ \{q^2\} \end{Bmatrix} = \begin{Bmatrix} \{F^1\} \\ \{F^2\} \\ \{F^3\} \end{Bmatrix}$$

Caution: Do not eliminate the variable u from the given equations.

Solution: The weak form is

$$\begin{aligned} 0 &= \int_{\Omega_e} (\text{grad} w \cdot \mathbf{q} - wf)\, dxdy - \int_{\Gamma_e} wq_n \, ds = 0 \\ 0 &= \int_{\Omega_e} \mathbf{v} \cdot \left(\text{grad}\mathbf{u} - \frac{1}{k}\mathbf{q} \right) dxdy = 0 \end{aligned}$$

where $\mathbf{v} = (v_1, v_2)$ and w are test functions (or, variations in $\mathbf{q}$ and u, respectively), and $q_n = \hat{\mathbf{n}} \cdot \mathbf{q}$.

For the case when u, q_1, q_2 are interpolated by same ψ_i, we have

$$\begin{aligned} &K_{ij}^{11} = 0, \quad K_{ij}^{12} = \int_{\Omega_e} \frac{\partial \psi_i}{\partial x} \psi_j \, dxdy, \quad K_{ij}^{13} = \int_{\Omega_e} \frac{\partial \psi_i}{\partial y} \psi_j \, dxdy \\ &K_{ij}^{21} = K_{ji}^{12}, \quad K_{ij}^{22} = -\int_{\Omega_e} \frac{1}{k} \psi_i \psi_j \, dxdy, \quad K_{ij}^{23} = 0 \\ &K_{ij}^{31} = K_{ji}^{13}, \quad K_{ij}^{32} = 0, \quad K_{ij}^{33} = K_{ij}^{22} \\ &F_i^1 = \int_{\Gamma_e} \psi_i q_n \, ds, \quad F_i^2 = 0, \quad F_i^e = 0 \end{aligned}$$

Problem 14.7: Compute the element coefficient matrices $[K^{\alpha\beta}]$ and vectors $\{F^\alpha\}$ of Problem 14.6 using linear triangular elements for all variables. Assume that k is a constant.

Solution: The matrices $\mathbf{K}^{\alpha\beta}$ can be expressed in terms of $\mathbf{S}^{\alpha\beta}$ introduced in Eq. (8.2.39). We have

$$\mathbf{K}^{12} = \mathbf{S}^{10}, \quad \mathbf{K}^{13} = \mathbf{S}^{20}, \quad \mathbf{K}^{22} = -\frac{1}{k}\mathbf{S}^{00}$$

PROPRIETARY MATERIAL. ©The McGraw-Hill Companies, Inc. All rights reserved.

where $S_{ij}^{\alpha\beta}$ are given in Eq. (8.2.44) for a linear triangular element.

Problem 14.8: Repeat Problem 14.7 with linear rectangular elements.

Solution: The matrices $\mathbf{K}^{\alpha\beta}$ can be expressed in terms of $\mathbf{S}^{\alpha\beta}$ introduced in Eq. (8.2.39). We have

$$\mathbf{K}^{12} = \mathbf{S}^{10}, \quad \mathbf{K}^{13} = \mathbf{S}^{20}, \quad \mathbf{K}^{22} = -\frac{1}{k}\mathbf{S}^{00}$$

where $S_{ij}^{\alpha\beta}$ are given in Eq. (8.2.52) for a linear rectangular element, except that $\mathbf{S}^{10} = (\mathbf{S}^{01})^{\mathrm{T}}$ and $\mathbf{S}^{20} = (\mathbf{S}^{02})^{\mathrm{T}}$ are given in the solution to Problem 8.10.

Problem 14.9: Consider the following form of the governing equations of the classical plate theory:

$$-\left(\frac{\partial^2 M_{xx}}{\partial x^2} - 4D_{66}\frac{\partial^4 w}{\partial x^2 \partial y^2} + \frac{\partial^2 M_{yy}}{\partial y^2}\right) = q \qquad (a)$$

$$\frac{\partial^2 w}{\partial x^2} = -\left(\bar{D}_{22}M_{xx} + \bar{D}_{12}M_{yy}\right),$$

$$\frac{\partial^2 w}{\partial y^2} = -\left(\bar{D}_{12}M_{xx} + \bar{D}_{11}M_{yy}\right) \qquad (b)$$

where M_{xx} and M_{yy} are the bending moments, w is the transverse deflection, q is the distributed load, ν is the Poisson ratio, and

$$\bar{D}_{ij} = \frac{D_{ij}}{D_0}, \quad D_0 = D_{11}D_{22} - D_{12}^2$$

(a) Gove the weak form of the equations, and (b) assume approximation of the form

$$w = \sum_{i=1}^{4} w_i \psi_i^1, \quad M_{xx} = \sum_{i=1}^{2} M_{xi}\psi_i^2, \quad M_{yy} = \sum_{i=1}^{2} M_{yi}\psi_j^3$$

to develop the (mixed) finite element model in the form

$$\begin{bmatrix} [K^{11}] & [K^{12}] & [K^{13}] \\ & [K^{22}] & [K^{23}] \\ \text{symm.} & & [K^{33}] \end{bmatrix} \begin{Bmatrix} \{w\} \\ \{M_{xx}\} \\ \{M_{yy}\} \end{Bmatrix} = \begin{Bmatrix} \{F^1\} \\ \{F^2\} \\ \{F^3\} \end{Bmatrix}$$

Comment on the choice of the functions ψ_i^α for $\alpha = 1, 2, 3$.

PROPRIETARY MATERIAL. ©The McGraw-Hill Companies, Inc. All rights reserved.

Solution: The weak forms of Eqs. (a) and (b) over a typical element Ω_e are

$$
\begin{aligned}
0 &= \int_{\Omega_e} \left(\frac{\partial \delta w}{\partial x}\frac{\partial M_{xx}}{\partial x} + \frac{\partial \delta w}{\partial y}\frac{\partial M_{yy}}{\partial y} + 4D_{66}\frac{\partial^2 \delta w}{\partial x \partial y}\frac{\partial^2 w}{\partial x \partial y} - q\delta w \right) dxdy \\
&\quad - \oint_{\Gamma_e} \left[\delta w \bar{Q}_n - 2D_{66}\frac{\partial^2 w}{\partial x \partial y}\left(\delta\theta_x n_y + \delta\theta_y n_x\right) \right] ds \qquad (c) \\
0 &= \int_{\Omega_e} \left[\frac{\partial w}{\partial x}\frac{\partial \delta M_{xx}}{\partial x} - \delta M_{xx}\left(\bar{D}_{22}M_{xx} - \bar{D}_{12}M_{yy}\right) \right] dxdy \\
&\quad - \oint_{\Gamma_e} \delta M_{xx}\theta_x n_x \; ds \qquad (d) \\
0 &= \int_{\Omega_e} \left[\frac{\partial w}{\partial y}\frac{\partial \delta M_{yy}}{\partial y} - \delta M_{yy}\left(\bar{D}_{11}M_{yy} - \bar{D}_{12}M_{xx}\right) \right] dxdy \\
&\quad - \oint_{\Gamma_e} \delta M_{yy}\theta_y n_y \; ds \qquad (e)
\end{aligned}
$$

The primary and secondary variables of the formulation are

$$
w, \; M_{xx}, \; M_{yy}, \qquad (f)
$$

$$
V_n, \quad \theta_x n_x \equiv \frac{\partial w}{\partial x} n_x, \quad \theta_y n_y \equiv \frac{\partial w}{\partial y} n_y, \qquad (g)
$$

where V_n is the effective shear force (Kirchhoff free edge condition)

$$
V_n = Q_n + \frac{\partial M_{ns}}{\partial s}, \qquad Q_n = Q_x n_x + Q_y n_y \qquad (h)
$$

The finite element model of Eq. (d) and (e) is obtained by substituting the approximations of the form

$$
w = \sum_{i=1}^{r} w_i \psi_i^{(1)}, \quad M_{xx} = \sum_{i=1}^{s} M_{xi}\psi_i^{(2)}, \quad M_{yy} = \sum_{i=1}^{p} M_{yi}\psi_i^{(3)} \qquad (i)
$$

where $\psi_i^{(\alpha)}$, $(\alpha = 1, 2, 3, 4)$ are appropriate interpolation functions. We obtain

$$
\begin{bmatrix} [K^{11}] & [K^{12}] & [K^{13}] \\ & [K^{22}] & [K^{23}] \\ \text{symm.} & & [K^{33}] \end{bmatrix} \begin{Bmatrix} \{w\} \\ \{M_x\} \\ \{M_y\} \end{Bmatrix} = \begin{Bmatrix} \{F^1\} \\ \{F^2\} \\ \{F^3\} \end{Bmatrix} \qquad (j)
$$

where

$$
K_{ij}^{11} = 4D_{66}\int_{\Omega_e} \frac{\partial^2 \psi_i^1}{\partial x \partial y}\frac{\partial^2 \psi_i^1}{\partial x \partial y} dxdy, \quad i, j = 1, 2, \ldots, r,
$$

PROPRIETARY MATERIAL. ©The McGraw-Hill Companies, Inc. All rights reserved.

$$
\begin{aligned}
K_{ij}^{12} &= \int_{\Omega_e} \frac{\partial \psi_i^1}{\partial x}\frac{\partial \psi_j^2}{\partial x} dxdy, \quad i,j = 1,2,\ldots,r; \quad j = 1,2,\ldots,s, \\
K_{ij}^{13} &= \int_{\Omega_e} \frac{\partial \psi_i^1}{\partial y}\frac{\partial \psi_j^3}{\partial y} dxdy, \quad i,j = 1,2,\ldots,r; \quad j = 1,2,\ldots,p, \\
K_{ij}^{22} &= \int_{\Omega_e} (-\bar{D}_{22})\psi_i^2\psi_j^2 \; dxdy, \quad i,j = 1,2,\ldots,s, \\
K_{ij}^{23} &= \int_{\Omega_e} (-\bar{D}_{12})\psi_i^2\psi_j^3 \; dxdy, \quad i = 1,2,\ldots,s; \quad j = 1,2,\ldots,p, \\
K_{ij}^{33} &= \int_{\Omega_e} (-\bar{D}_{11})\psi_i^3\psi_j^3 \; dxdy, \quad i,j = 1,2,\ldots,p, \\
F_i^1 &= \int_{\Omega_e} q\psi_i^1 \; dxdy + \oint_{\Gamma_e} V_n\psi_i^1 \; ds, \quad i = 1,2,\ldots,r, \\
F_i^2 &= \oint_{\Gamma_e} \theta_x n_x \psi_i^2 \; ds, \quad i = 1,2,\ldots,s, \\
F_i^3 &= \oint_{\Gamma_e} \theta_y n_y \psi_i^3 \; ds, \quad i = 1,2,\ldots,p,
\end{aligned} \tag{k}
$$

An examination of the weak forms (d) and (e) show that the minimum continuity conditions of the interpolation functions ψ_i^α $(\alpha = 1,2,3)$ are

$$
\begin{aligned}
\psi_i^1 &= \text{ linear in } x \text{ and linear in } y \\
\psi_i^2 &= \text{ linear in } x \text{ and constant in } y \\
\psi_i^3 &= \text{ linear in } y \text{ and constant in } x \\
\psi_i^4 &= \text{ linear in } x \text{ and linear in } y
\end{aligned} \tag{i}
$$

Problem 14.10: Use the interpolation

$$
w = \sum_{i=1}^{4} w_i\psi_i^1, \quad M_{xx} = \sum_{i=1}^{2} M_{xi}\psi_i^2, \quad M_{yy} = \sum_{i=1}^{2} M_{yi}\psi_j^3
$$

with

$$
\psi_1^1 = \left(1 - \frac{x}{a}\right)\left(1 - \frac{y}{b}\right), \quad \psi_2^1 = \frac{x}{a}\left(1 - \frac{y}{b}\right), \quad \psi_3^1 = \frac{x}{a}\frac{y}{b}, \quad \psi_4^1 = \left(1 - \frac{x}{a}\right)\frac{y}{b}
$$

$$
\psi_1^2 = 1 - \frac{x}{a}, \quad \phi_2^2 = \frac{x}{a}, \quad \psi_1^3 = 1 - \frac{y}{b}, \quad \psi_2^3 = \frac{y}{b}
$$

for a rectangular element with sides a and b to evaluate the matrices $[K^{\alpha\beta}](\alpha, \beta = 1,2,3)$ in Problem 14.9.

PROPRIETARY MATERIAL. ©The McGraw-Hill Companies, Inc. All rights reserved.

Solution: We can select either

$$\psi_1^2 = 1 - \frac{\overline{x}}{a}, \quad \psi_2^2 = \frac{\overline{x}}{a}, \quad \psi_1^3 = 1 - \frac{\overline{y}}{b}, \quad \psi_2^3 = \frac{\overline{y}}{b} \tag{a}$$

and ψ_i^1 to be the bilinear interpolation functions, or

$$\psi_i^1 = \psi_i^2 = \psi_i^3 = \psi_i^4 = \text{bilinear functions of a rectangular element} \tag{b}$$

The corresponding rectangular elements are shown in Figure P14.10.

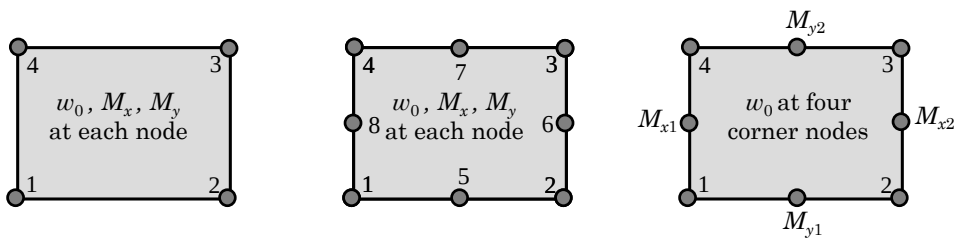

(a) Mixed model A (b) Mixed model B (c) Mixed model C

Figure P14.10: Mixed rectangular plate bending elements based on CPT. (a) Model A. (b) Model B. (c) Model C.

The numerical form of element matrices is

$$[K^{11}] = \frac{4D_{66}}{ab}\begin{bmatrix} 1 & -1 & 1 & -1 \\ -1 & 1 & -1 & 1 \\ 1 & -1 & 1 & -1 \\ -1 & 1 & -1 & 1 \end{bmatrix}, \quad [K^{12}] = \frac{b}{2a}\begin{bmatrix} 1 & -1 \\ -1 & 1 \\ -1 & 1 \\ 1 & -1 \end{bmatrix} = [K^{21}]^{\mathrm{T}}$$

$$[K^{13}] = [K^{31}]^{\mathrm{T}} = \frac{a}{2b}\begin{bmatrix} 1 & -1 \\ 1 & -1 \\ -1 & 1 \\ -1 & 1 \end{bmatrix}, \qquad [K^{22}] = -\frac{D_{22}ab}{6}\begin{bmatrix} 2 & 1 \\ 1 & 2 \end{bmatrix}$$

$$[K^{23}] = [K^{32}]\mathrm{T} = \frac{D_{12}ab}{4}\begin{bmatrix} 1 & 1 \\ 1 & 1 \end{bmatrix}, \qquad [K^{33}] = \frac{D_{11}}{D_{22}}[K^{22}]$$

Problem 14.11: Repeat Problem 14.10 for the case in which $\phi_i^1 = \phi_i^2 = \psi_i$.

Solution: $[K^{11}]$ is the same as in Problem 14.10. Also, we have

$$[K^{12}] = [K^{21}]^{\mathrm{T}} = [S^{11}], \quad [K^{13}] = [K^{31}]^{\mathrm{T}} = [S^{22}]$$
$$[K^{22}] = -D_{22}[S^{00}], \quad [K^{23}] = [K^{32}]^{\mathrm{T}} = D_{12}[S^{00}], \quad [K^{33}] = -D_{11}[S^{00}]$$

PROPRIETARY MATERIAL. ©The McGraw-Hill Companies, Inc. All rights reserved.

where $[S^{11}]$, $[S^{22}]$ and $[S^{00}]$ are defined in Eq. (8.2.52).

Problem 14.12: Evaluate the element matrices in (14.4.6b) by assuming that the nonlinear parts in the element coefficients are element-wise-constant.

Solution: We have

$$[K^{11}] = \frac{EA}{L}\begin{bmatrix} 1 & -1 \\ -1 & 1 \end{bmatrix}, \quad [K^{12}] = \frac{1}{2}[K^{21}] = \frac{EA}{L}\begin{bmatrix} 1 & 0 & -1 & 0 \\ -1 & 0 & 1 & 0 \end{bmatrix}$$

$$[K^{22}] = \frac{2EI}{L^3}\begin{bmatrix} 6 & -3L & -6 & -3L \\ -3L & 2L^2 & 3L & L^2 \\ -6 & 3L & 6 & 3L \\ -3L & L^2 & 3L & 2L^2 \end{bmatrix} + \frac{N}{30L}\begin{bmatrix} 36 & -3L & -36 & -3L \\ -3h & 4L^2 & 3L & -L^2 \\ -36 & 3L & 36 & 3L \\ -3L & -L^2 & 3L & 4L^2 \end{bmatrix}$$

where L is the length of the element and $N = 0.5(dw/dx$.

Problem 14.13: Give the finite element formulation of the following nonlinear equation over an element (x_a, x_b) :

$$-\frac{d}{dx}\left(u\frac{du}{dx}\right) + 1 = 0 \quad \text{for} \quad 0 < x < 1$$

$$\left(\frac{du}{dx}\right)\bigg|_{x=0} = 0, \quad u(1) = \sqrt{2}$$

Solution: The weak form is same as in the linear equation except that we have $a(x) = u(x)$: $[K(\bar{u})]\{u\} = \{F\}$ with [see Reddy (2004b)]

$$\begin{aligned} K_{ij}^e &= \int_{x_a}^{x_b}\left(\sum_{k=1}^{n} u_k^e \psi_k^e\right)\frac{d\psi_i^e}{dx}\frac{d\psi_j^e}{dx}\,dx \\ &= \sum_{k=1}^{n} u_k^e \int_{x_a}^{x_b} \psi_k^e \frac{d\psi_i^e}{dx}\frac{d\psi_j^e}{dx}\,dx \qquad (a) \\ F_i &= -\int_{x_a}^{x_b} \psi_i^e\,dx + Q_i \end{aligned}$$

For example, for linear approximation ($n = 2$) of $u(x)$, we have

$$\begin{aligned} K_{ij}^e &= \sum_{k=1}^{n} u_k^e \int_{x_a}^{x_b} \psi_k^e \frac{d\psi_i^e}{dx}\frac{d\psi_j^e}{dx}\,dx \\ &= \sum_{k=1}^{n} a_0^e u_k^e (-1)^{i+j}\frac{1}{h_e^2}\int_{x_a}^{x_b} \psi_k^e\,dx \\ &= (-1)^{i+j}\frac{a_0^e}{2h_e}\left(\sum_{k=1}^{n} u_k^e\right) = (-1)^{i+j}\frac{a_0^e}{2h_e}(u_1^e + u_2^e) \qquad (b) \end{aligned}$$

PROPRIETARY MATERIAL. ©The McGraw-Hill Companies, Inc. All rights reserved.

or

$$[K^e] = \frac{a_0^e(u_1^e + u_2^e)}{2h_e}\begin{bmatrix} 1 & -1 \\ -1 & 1 \end{bmatrix} \tag{c}$$

Further, the assembled equations associated with a mesh of two linear elements of equal length are (U_1, U_2, U_3 are the global nodal values)

$$\begin{aligned} &\frac{1}{2h}\begin{bmatrix} (U_1+U_2) & -(U_1+U_2) & 0 \\ -(U_1+U_2) & (U_1+2U_2+U_3) & -(U_2+U_3) \\ 0 & -(U_2+U_3) & (U_2+U_3) \end{bmatrix}\begin{Bmatrix} U_1 \\ U_2 \\ U_3 \end{Bmatrix} \\ &= \begin{Bmatrix} f_1^{(1)} \\ f_2^{(1)} + f_1^{(2)} \\ f_2^{(2)} \end{Bmatrix} + \begin{Bmatrix} Q_1^{(1)} \\ Q_2^{(1)} + Q_1^{(2)} \\ Q_2^{(2)} \end{Bmatrix} \end{aligned} \tag{d}$$

Problem 14.14: Compute the tangent coefficient matrix for the nonlinear problems in Problem 14.13. What restriction(s) should be placed on the initial guess vector?

Solution: By definition (14.4.17), we have [see Reddy (2004b)]

$$\begin{aligned} (K_T^e)_{ij} &\equiv \frac{\partial R_i^e}{\partial u_j^e} = \frac{\partial}{\partial u_j^e}\left(\sum_{m=1}^{n} K_{im}^e u_m^e - F_i^e\right) \\ &= \sum_{m=1}^{n}\left(\frac{\partial K_{im}^e}{\partial u_j^e}u_m^e + K_{im}^e\frac{\partial u_m^e}{\partial u_j^e}\right) = \sum_{m=1}^{n}\frac{\partial K_{im}^e}{\partial u_j^e}u_m^e + K_{ij}^e \end{aligned} \tag{a}$$

For the problem at hand, we have

$$\begin{aligned} (K_T)_{ij} &= \sum_{m=1}^{n}\frac{\partial K_{im}^e}{\partial u_j^e}u_m^e + K_{ij}^e \\ &= \sum_{m=1}^{n}\frac{\partial}{\partial u_j^e}\left(\int_{x_a}^{x_b} u_h\frac{d\psi_i^e}{dx}\frac{d\psi_m^e}{dx}dx\right)u_m^e + K_{ij}^e \\ &= \int_{x_a}^{x_b}\frac{\partial u_h}{\partial u_j^e}\frac{d\psi_i^e}{dx}\left(\sum_{m=1}^{n} u_m^e\frac{d\psi_m^e}{dx}\right)dx + K_{ij}^e \\ &= \int_{x_a}^{x_b}\frac{du_h}{dx}\frac{d\psi_i^e}{dx}\psi_j^e\,dx + K_{ij}^e \equiv \hat{K}_{ij}^e + K_{ij}^e \end{aligned} \tag{i}$$

where the identity

$$\sum_{m=1}^{n} u_m^e\frac{dL_m^e}{dx} = \frac{du_h}{dx}$$

is used in arriving at the last line. We have,

$$\hat{K}_{ij}^e = \int_{x_a}^{x_b}\frac{du_h}{dx}\frac{d\psi_i^e}{dx}\psi_j^e\,dx = \frac{u_2^e - u_1^e}{2}\int_{x_a}^{x_b}\frac{d\psi_i^e}{dx}\psi_j^e\,dx$$

PROPRIETARY MATERIAL. ©The McGraw-Hill Companies, Inc. All rights reserved.

or

$$\hat{\mathbf{K}}^e = \frac{u_2^e - u_1^e}{2h_e}\begin{bmatrix} -1 & -1 \\ 1 & 1 \end{bmatrix}$$

Thus, the tangent matrix becomes

$$\mathbf{K}_T^e = \mathbf{K}^e + \hat{\mathbf{K}}^e = \frac{(\bar{u}_1^e + \bar{u}_2^e)}{2h_e}\begin{bmatrix} 1 & -1 \\ -1 & 1 \end{bmatrix} + \frac{(\bar{u}_2^e - \bar{u}_1^e)}{2h_e}\begin{bmatrix} -1 & -1 \\ 1 & 1 \end{bmatrix}$$

where $\bar{u}_i^e$ denote the nodal values known from the previous iteration. Note that the tangent coefficient matrix is not symmetric. Also, the initial guess should not be that all $U_i = 0$. Since the boundary condition at $x = 1$ is nonzero, the initial guess should be one that satisfies the boundary condition. If the boundary condition is homogeneous, then at least one of the nodal values should be nonzero so that the tangent coefficient matrix is non-zero.

Problem 14.15: Compute the tangent stiffness matrix $\mathbf{K}_T$ in (14.4.17) for the Euler–Bernoulli beam element in (14.4.6a).

Solution: The coefficients of the element tangent stiffness matrix $\mathbf{K}_T^e \equiv \mathbf{T}^e$ can be computed using the definition in (14.4.17). In terms of the components defined in Eq. (14.4.6a), we can write [see Reddy (2004b)]

$$T_{ij}^{\alpha\beta} = \left(\frac{\partial R_i^\alpha}{\partial \Delta_j^\beta}\right)^{(r-1)} \tag{a}$$

for $\alpha, \beta = 1, 2$. The components of the residual vector can be expressed as

$$\begin{aligned} R_i^\alpha &= \sum_{\gamma=1}^{2}\sum_{p=1} K_{ip}^{\alpha\gamma}\Delta_p^\gamma - F_i^\alpha \\ &= \sum_{p=1}^{2} K_{ip}^{\alpha 1}\Delta_p^1 + \sum_{P=1}^{4} K_{iP}^{\alpha 2}\Delta_P^2 - F_i^\alpha \\ &= \sum_{p=1}^{2} K_{ip}^{\alpha 1} u_p + \sum_{P=1}^{4} K_{iP}^{\alpha 2}\bar{\Delta}_P - F_i^\alpha \end{aligned} \tag{b}$$

Note that the range of p is dictated by the size of the matrix $[K^{\alpha\beta}]$. We have

$$\begin{aligned} T_{ij}^{\alpha\beta} &= \left(\frac{\partial R_i^\alpha}{\partial \Delta_j^\beta}\right) = \frac{\partial}{\partial \Delta_j^\beta}\left(\sum_{\gamma=1}^{2}\sum_{p=1} K_{ip}^{\alpha\gamma}\Delta_p^\gamma - F_i^\alpha\right) \\ &= \sum_{\gamma=1}^{2}\sum_{p=1}\left(K_{ip}^{\alpha\gamma}\frac{\partial \Delta_p^\gamma}{\partial \Delta_j^\beta} + \frac{\partial K_{ip}^{\alpha\gamma}}{\partial \Delta_j^\beta}\Delta_p^\gamma\right) \\ &= K_{ij}^{\alpha\beta} + \sum_{p=1}^{2}\frac{\partial}{\partial \Delta_j^\beta}\left(K_{ip}^{\alpha 1}\right)u_p + \sum_{P=1}^{4}\frac{\partial}{\partial \Delta_j^\beta}\left(K_{iP}^{\alpha 2}\right)\bar{\Delta}_P \end{aligned} \tag{c}$$

PROPRIETARY MATERIAL. ©The McGraw-Hill Companies, Inc. All rights reserved.

Then the tangent stiffness matrix coefficients $T_{ij}^{\alpha\beta}$ can be computed as follows:

$$\begin{aligned} T_{ij}^{11} &= K_{ij}^{11} + \sum_{p=1}^{2} \frac{\partial K_{ip}^{11}}{\partial u_j} u_p + \sum_{P=1}^{4} \frac{\partial K_{iP}^{12}}{\partial u_j} \bar{\Delta}_P \\ &= K_{ij}^{11} + \sum_{p=1}^{2} 0 \cdot u_p + \sum_{P=1}^{4} 0 \cdot \bar{\Delta}_P \end{aligned} \tag{d}$$

Since

$$\frac{\partial K_{ij}^{\alpha\beta}}{\partial u_k} = 0 \text{ for all } \alpha, \beta, i, j \text{ and } k \tag{e}$$

the coefficients $[T^{11}]$ and $[T^{21}]$ of the tangent stiffness matrix are the same as those of the direct stiffness matrix:

$$[T^{11}] = [K^{11}] \quad , \quad [T^{21}] = [K^{21}] \tag{f}$$

Next consider

$$\begin{aligned} T_{iJ}^{12} &= K_{iJ}^{12} + \sum_{p=1}^{2} \left(\frac{\partial K_{ip}^{11}}{\partial \bar{\Delta}_J} \right) u_p + \sum_{P=1}^{4} \left(\frac{\partial K_{iP}^{12}}{\partial \bar{\Delta}_J} \right) \bar{\Delta}_P \\ &= K_{iJ}^{12} + 0 + \sum_{P=1}^{4} \left[\int_{x_a}^{x_b} \frac{1}{2} A_{xx} \frac{\partial}{\partial \bar{\Delta}_J} \left(\frac{dw}{dx} \right) \frac{d\psi_i}{dx} \frac{d\phi_P}{dx} \, dx \right] \bar{\Delta}_P \\ &= K_{iJ}^{12} + \sum_{P=1}^{4} \left[\int_{x_a}^{x_b} \frac{1}{2} A_{xx} \frac{\partial}{\partial \bar{\Delta}_J} \left(\sum_{K}^{4} \bar{\Delta}_K \frac{d\phi_K}{dx} \right) \frac{d\psi_i}{dx} \frac{d\phi_P}{dx} \, dx \right] \bar{\Delta}_P \\ &= K_{iJ}^{12} + \sum_{P=1}^{4} \left[\int_{x_a}^{x_b} \frac{1}{2} A_{xx} \frac{d\phi_J}{dx} \frac{d\psi_i}{dx} \frac{d\phi_P}{dx} \, dx \right] \bar{\Delta}_P \\ &= K_{iJ}^{12} + \int_{x_a}^{x_b} \frac{1}{2} A_{xx} \frac{d\psi_i}{dx} \frac{d\phi_J}{dx} \left(\sum_{P=1}^{4} \frac{d\phi_P}{dx} \bar{\Delta}_P \right) \, dx \\ &= K_{iJ}^{12} + \int_{x_a}^{x_b} \left(\frac{1}{2} A_{xx} \frac{dw}{dx} \right) \frac{d\psi_i}{dx} \frac{d\phi_J}{dx} \, dx \\ &= K_{iJ}^{12} + K_{iJ}^{12} = 2K_{iJ}^{12} = K_{Ji}^{21} \end{aligned} \tag{g}$$

$$\begin{aligned} T_{IJ}^{22} &= K_{IJ}^{22} + \sum_{p=1}^{2} \left(\frac{\partial K_{Ip}^{21}}{\partial \bar{\Delta}_J} \right) u_p + \sum_{P=1}^{4} \left(\frac{\partial K_{IP}^{22}}{\partial \bar{\Delta}_J} \right) \bar{\Delta}_P \\ &= K_{IJ}^{22} + \sum_{p=1}^{2} \left[\int_{x_a}^{x_b} A_{xx} \frac{\partial}{\partial \bar{\Delta}_J} \left(\sum_{K}^{4} \bar{\Delta}_K \frac{d\phi_K}{dx} \right) \frac{d\phi_I}{dx} \frac{d\psi_p}{dx} \, dx \right] u_p \end{aligned}$$

PROPRIETARY MATERIAL. ©The McGraw-Hill Companies, Inc. All rights reserved.

$$
\begin{aligned}
&+\sum_{P=1}^{4}\left[\int_{x_a}^{x_b}\frac{1}{2}A_{xx}\frac{\partial}{\partial\bar{\Delta}_J}\left(\frac{dw}{dx}\right)^2\frac{d\phi_I}{dx}\frac{d\phi_P}{dx}\,dx\right]\bar{\Delta}_P\\
&=K_{IJ}^{22}+\int_{x_a}^{x_b}A_{xx}\frac{d\phi_I}{dx}\frac{d\phi_J}{dx}\left(\sum_{p=1}^{2}\frac{d\psi_p}{dx}u_p\right)\,dx\\
&\quad+\int_{x_a}^{x_b}A_{xx}\left(\frac{dw}{dx}\right)\frac{d\phi_I}{dx}\frac{d\phi_J}{dx}\left(\sum_{P=1}^{4}\bar{\Delta}_P\frac{d\phi_P}{dx}\right)\,dx\\
&=K_{IJ}^{22}+\int_{x_a}^{x_b}A_{xx}\left(\frac{du_0}{dx}+\frac{dw}{dx}\frac{dw}{dx}\right)\frac{d\phi_I}{dx}\frac{d\phi_J}{dx}\,dx \qquad (h)
\end{aligned}
$$

Problem 14.16: Develop the nonlinear finite element model of the Timoshenko beam theory. Equations (14.56) are valid for this case, with the following changes. In place of $(d^2/dx^2)(b\ d^2w/dx^2)$ use $-(d/dx)(b\ d\Psi/dx)+GAk(dw/dx+\Psi)$ and add the following additional equation for w:

$$
-\frac{d}{dx}\left[GAk\left(\frac{dw}{dx}+\Psi\right)\right]=q
$$

See Section 4.4 for additional details.

Solution: The equations of equilibrium of the Timoshenko beam theory for the nonlinear case are

$$
-\frac{d}{dx}\left\{A_{xx}\left[\frac{du}{dx}+\frac{1}{2}\left(\frac{dw}{dx}\right)^2\right]\right\}=f \qquad (a)
$$

$$
\begin{aligned}
&-\frac{d}{dx}\left[S_{xx}\left(\frac{dw}{dx}+\Psi\right)\right]\\
&\quad-\frac{d}{dx}\left\{A_{xx}\frac{dw}{dx}\left[\frac{du}{dx}+\frac{1}{2}\left(\frac{dw}{dx}\right)^2\right]\right\}=q \qquad (b)\\
&\quad-\frac{d}{dx}\left(D_{xx}\frac{d\Psi}{dx}\right)+S_{xx}\left(\frac{dw}{dx}+\Psi\right)=0 \qquad (c)
\end{aligned}
$$

where $A_{xx}=EA$, $S_{xx}=K_sGA$ and $D_{xx}=EI$.

The weaks forms of the three equations are

$$
\begin{aligned}
0&=\int_{x_a}^{x_b}\left\{A_{xx}\frac{d\delta u}{dx}\left[\frac{du}{dx}+\frac{1}{2}\left(\frac{dw}{dx}\right)^2\right]+f\delta u_0\right\}dx\\
&\quad-Q_1^e\delta u(x_a)-Q_4^e\delta u(x_b) \qquad (d)\\
0&=\int_{x_a}^{x_b}\frac{d\delta w}{dx}\left\{S_{xx}^e\left(\frac{dw}{dx}+\Psi\right)+A_{xx}^e\frac{dw}{dx}\left[\frac{du}{dx}+\frac{1}{2}\left(\frac{dw}{dx}\right)^2\right]\delta wq\right\}dx
\end{aligned}
$$

PROPRIETARY MATERIAL. ©The McGraw-Hill Companies, Inc. All rights reserved.

$$
\begin{aligned}
&\quad - Q_2^e \delta w(x_a) - Q_5^e \delta w(x_b) && (e)\\
0 &= \int_{x_a}^{x_b} \left[D_{xx}^e \frac{d\delta\Psi}{dx}\frac{d\Psi}{dx} + S_{xx}^e\ \delta\Psi \left(\frac{dw}{dx} + \Psi \right) \right] dx \\
&\quad - Q_3^e\, \delta\Psi(x_a) - Q_6^e\, \delta\Psi(x_b) && (f)
\end{aligned}
$$

where δu, δw, and $\delta\Psi$ are the virtual displacements. The Q_i^e have the same physical meaning as in the Euler–Bernoulli beam element, and their relationship to the horizontal displacement u, transverse deflection w_0, and rotation Ψ, is

$$
\begin{aligned}
&Q_1^e = -N_{xx}(x_a), \qquad Q_4^e = N_{xx}(x_b) \\
&Q_2^e = -\left[Q_x + N_{xx}\frac{dw}{dx} \right]_{x=x_a}, \quad Q_5^e = \left[Q_x + N_{xx}\frac{dw}{dx} \right]_{x=x_b} \\
&Q_3^e = -M_{xx}(x_a), \qquad Q_6^e = M_{xx}(x_b) && (g)
\end{aligned}
$$

Suppose that the displacements are approximated as

$$
u(x) = \sum_{j=1}^{m} u_j^e \psi_j^{(1)}, \quad w(x) = \sum_{j=1}^{n} w_j^e \psi_j^{(2)}, \quad \Psi(x) = \sum_{j=1}^{p} s_j^e \psi_j^{(3)} \qquad (h)
$$

where $\psi_j^{(\alpha)}(x)$ $(\alpha = 1, 2, 3)$ are Lagrange interpolation functions of degree $(m-1)$, $(n-1)$, and $(p-1)$, respectively. At the moment, the values of m, n, and p are arbitrary, that is, arbitrary degree of polynomial approximations of u_0, w_0, and Ψ may be used. Substitution of (h) for u, w, and Ψ, and $\delta u = \psi_i^{(1)}$, $\delta w = \psi_i^{(2)}$, and $\delta\Psi = \psi_i^{(3)}$ into Eqs. (*d*)–(*f*) yields the finite element model

$$
0 = \sum_{j=1}^{m} K_{ij}^{11} u_j^e + \sum_{j=1}^{n} K_{ij}^{12} w_j^e + \sum_{j=1}^{p} K_{ij}^{13} s_j^e - F_i^1 \qquad (i)
$$

$$
0 = \sum_{j=1}^{m} K_{ij}^{21} u_j^e + \sum_{j=1}^{n} K_{ij}^{22} w_j^e + \sum_{j=1}^{p} K_{ij}^{23} s_j^e - F_i^2 \qquad (j)
$$

$$
0 = \sum_{j=1}^{m} K_{ij}^{31} u_j^e + \sum_{j=1}^{n} K_{ij}^{32} w_j^e + \sum_{j=1}^{p} K_{ij}^{33} s_j^e - F_i^3 \qquad (k)
$$

where

$$
\begin{aligned}
&K_{ij}^{11} = \int_{x_a}^{x_b} A_{xx} \frac{d\psi_i^{(1)}}{dx}\frac{d\psi_j^{(1)}}{dx}\ dx, \ K_{ij}^{12} = \frac{1}{2}\int_{x_a}^{x_b} A_{xx}\frac{dw_0}{dx}\frac{d\psi_i^{(1)}}{dx}\frac{d\psi_j^{(2)}}{dx}\ dx \\
&K_{ij}^{21} = \int_{x_a}^{x_b} A_{xx}\frac{dw_0}{dx}\frac{d\psi_i^{(2)}}{dx}\frac{d\psi_j^{(1)}}{dx}\ dx, \quad K_{ij}^{13} = 0, \quad K_{ij}^{31} = 0
\end{aligned}
$$

PROPRIETARY MATERIAL. © The McGraw-Hill Companies, Inc. All rights reserved.

$$
\begin{aligned}
K_{ij}^{22} &= \int_{x_a}^{x_b} S_{xx} \frac{d\psi_i^{(2)}}{dx} \frac{d\psi_j^{(2)}}{dx}\, dx + \frac{1}{2} \int_{x_a}^{x_b} A_{xx} \left(\frac{dw_0}{dx} \right)^2 \frac{d\psi_i^{(2)}}{dx} \frac{d\psi_j^{(2)}}{dx}\, dx \\
K_{ij}^{23} &= \int_{x_a}^{x_b} S_{xx} \frac{d\psi_i^{(2)}}{dx}\, \psi_j^{(3)}\, dx = K_{ji}^{32} \\
K_{ij}^{33} &= \int_{x_a}^{x_b} \left(D_{xx} \frac{d\psi_i^{(3)}}{dx} \frac{d\psi_j^{(3)}}{dx} + S_{xx} \psi_i^{(3)} \psi_j^{(3)} \right) dx \\
F_i^1 &= \int_{x_a}^{x_b} \psi_i^{(1)} f\, dx + Q_1^e \psi_i^{(1)}(x_a) + Q_4^e \psi_i^{(1)}(x_b) \\
F_i^2 &= \int_{x_a}^{x_b} \psi_i^{(2)} q\, dx + Q_2^e \psi_i^{(2)}(x_a) + Q_5^e \psi_i^{(2)}(x_b) \\
F_i^3 &= Q_3^e \psi_i^{(3)}(x_a) + Q_6^e \psi_i^{(3)}(x_b)
\end{aligned} \tag{ℓ}
$$

The element equations (i)–(k) can be expressed in matrix form as

$$
\begin{bmatrix} [K^{11}] & [K^{12}] & [K^{13}] \\ [K^{21}] & [K^{22}] & [K^{23}] \\ [K^{31}] & [K^{32}] & [K^{33}] \end{bmatrix} \begin{Bmatrix} \{u\} \\ \{w\} \\ \{s\} \end{Bmatrix} = \begin{Bmatrix} \{F^1\} \\ \{F^2\} \\ \{F^3\} \end{Bmatrix} \tag{m}
$$

The choice of the approximation functions $\psi_i^{(\alpha)}$ dictates different finite element models. The choice of linear polynomials $\psi_i^{(1)} = \psi_i^{(2)}$ is known to yield a stiffness matrix that is nearly singular. This will be discussed further in the next section. When $\psi_i^{(1)}$ are quadratic and $\psi_i^{(2)}$ are linear, the stiffness matrix is 5×5. It is possible to eliminate the interior degree of freedom for w_0 and obtain 4×4 stiffness matrix. This element behaves well. When $\psi_i^{(1)}$ are cubic and $\psi_i^{(2)}$ are quadratic, the stiffness matrix is 7×7. If the interior nodal degrees of freedom are eliminated, one obtains 4×4 stiffness matrix that is known to yield the exact solution at the nodes in the linear case when the shear stiffness and bending stiffnesses are element-wise constant. More details of various Timoshenko beam elements can be found in Reddy (2004b)

Problem 14.17: Compute the tangent stiffness matrix for the Timoshenko beam element in Problem 14.16.

Solution: The tangent matrix coefficients are defined by (see Problem 14.15)

$$
T_{ij}^{\alpha\beta} = K_{ij}^{\alpha\beta} + \sum_{\gamma=1}^{3} \sum_{k=1}^{n} \frac{\partial}{\partial \Delta_j^{\beta}} \left(K_{ik}^{\alpha\gamma} \right) \Delta_k^{\gamma} \tag{a}
$$

In particular, we have

$$
T_{ij}^{11} = K_{ij}^{11} + 0
$$

PROPRIETARY MATERIAL. ©The McGraw-Hill Companies, Inc. All rights reserved.

$$
\begin{aligned}
T_{ij}^{12} &= K_{ij}^{12} + \frac{1}{2}\int_{x_a}^{x_b} A_{xx}\frac{dw_0}{dx}\frac{d\psi_i^{(1)}}{dx}\frac{d\psi_j^{(2)}}{dx}dx = 2K_{ij}^{12} \\
T_{ij}^{13} &= K_{ij}^{13} = 0 \\
T_{ij}^{21} &= K_{ij}^{21} + 0 = K_{ij}^{21} \\
T_{ij}^{22} &= K_{ij}^{22} + \int_{x_a}^{x_b} A_{xx}\left[\frac{du_0}{dx} + \left(\frac{dw_0}{dx}\right)^2\right]\frac{d\psi_i^{(2)}}{dx}\frac{d\psi_j^{(2)}}{dx}dx \\
T_{ij}^{23} &= K_{ij}^{23} + 0 = K_{ij}^{23} \\
T_{ij}^{31} &= K_{ij}^{31} + 0 = K_{ij}^{31} \\
T_{ij}^{32} &= K_{ij}^{32} + 0 = K_{ij}^{32} \\
T_{ij}^{33} &= K_{ij}^{33} + 0 = K_{ij}^{33}
\end{aligned} \tag{b}
$$

where the direct stiffness coefficients $K_{ij}^{\alpha\beta}$ are defined by Eq. (ℓ) of Problem 14.16.

Problem 14.18: (*Natural convection in flow between heated vertical plates*) Consider the flow of a viscous incompressible fluid in the presence of a temperature gradient between two stationary long vertical plates. Assuming zero pressure gradient between the plates, we can write $v_x = v_x(y)$, $v_y = 0$, $T = T(y)$, and

$$
0 = \rho\beta g(T - T_m) + \mu\frac{d^2v_x}{dy^2}, \quad 0 = k\frac{d^2T}{dy^2} + \mu\left(\frac{dv_x}{dy}\right)^2
$$

where $T_m = \frac{1}{2}(T_0 + T_1)$ is the mean temperature of the two plates, g the gravitational acceleration, ρ the density, β the coefficient of thermal expansion, μ the viscosity, and k the thermal conductivity of the fluid. Give a finite element formulation of the equations and discuss the solution strategy for the computational scheme.

Solution: The finite element model is given by

$$
\mathbf{K}^v\mathbf{v}_y - \mathbf{G}\mathbf{T} = \mathbf{F}^1, \quad \mathbf{K}^T\mathbf{T} = \mathbf{F}^2 \tag{a, b}
$$

where

$$
\begin{aligned}
K_{ij}^v &= \int_{y_a}^{y_b} \mu\frac{d\psi_i}{dy}\frac{d\psi_j}{dy}\,dy, \quad K_{ij}^T = \int_{y_a}^{y_b} k\frac{d\psi_i}{dy}\frac{d\psi_j}{dy}\,dy, \quad G_{ij} = \int_{y_a}^{y_b} \rho g\beta\psi_i\psi_j dy \\
F_i^1 &= -\int_{y_a}^{y_b} \rho\beta g\psi_i\,dy + P_i, \quad P_1 = -\mu\left(\frac{dv_x}{dy}\right)_{y_a}, \quad P_2 = \mu\left(\frac{dv_x}{dy}\right)_{y_b} \\
F_i^2 &= \int_{y_a}^{y_b} \mu\left(\frac{dv_x}{dy}\right)^2\psi_i dy + Q_i, \quad Q_1 = -k\left(\frac{dT}{dy}\right)_{y_a}, \quad Q_2 = k\left(\frac{dT}{dy}\right)_{y_b}
\end{aligned} \tag{c}
$$

Solution strategy: Solve the assembled equations corresponding to Eq. (b) for T, subject to boundary conditions and initial values of $v_x = 0$. Use the temperatures

PROPRIETARY MATERIAL. ©The McGraw-Hill Companies, Inc. All rights reserved.

thus obtained in the assembled equations associated with Eq. (a) and solve for v_x. Then resolve Eq. (b) with the updated F_i^2 (because of the newly computed v_x). Iterate the procedure until v_x and T obtained in two consecutive iterations differ by, say, one percent.

Problem 14.19: Derive the interpolation functions ψ_1, ψ_5, and ψ_8 for the eight-node prism element using the alternative procedure described in Section 8.2 for rectangular elements.

Solution: This is straightforward. Since $\psi_1(\xi,\eta,\zeta)$ must vanish on the faces $\xi = 1$, $\eta = 1$ and $\zeta = 1$, it is of the form (see Fig. 14.3.2)

$$\psi_1 = c_1(1-\xi)(1-\eta)(1-\zeta), \quad \psi_1(-1,-1,-1) = 1 \quad \rightarrow \quad c_1 = \frac{1}{8}$$

Similarly, we obtain

$$\begin{aligned}
\psi_1 &= \frac{1}{8}(1-\xi)(1-\eta)(1-\zeta) \\
\psi_5 &= \frac{1}{8}(1-\xi)(1-\eta)(1+\zeta) \\
\psi_8 &= \frac{1}{8}(1-\xi)(1+\eta)(1+\zeta)
\end{aligned}$$

Problem 14.20: Evaluate the source vector components f_i^e and coefficients K_{ij}^e over a master prism element when f is a constant, f_0, and $k_1 = k_2 = k_3 =$ constant in (14.3.5b).

Solution: For a cube of sides $a \times b \times c$, the coordinate transformation become

$$x = \frac{a}{2}(1+\xi), \quad y = \frac{b}{2}(1+\eta), \quad x = \frac{c}{2}(1+\zeta)$$

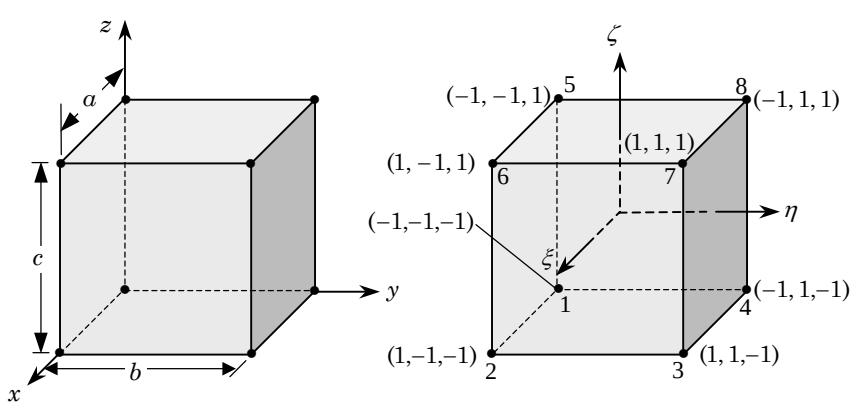

PROPRIETARY MATERIAL. ©The McGraw-Hill Companies, Inc. All rights reserved.

and the Jacobian matrix and its inverse are

$$\mathbf{J} = \begin{bmatrix} \frac{\partial x}{\partial \xi} & \frac{\partial y}{\partial \xi} & \frac{\partial z}{\partial \xi} \\ \frac{\partial x}{\partial \eta} & \frac{\partial y}{\partial \eta} & \frac{\partial z}{\partial \eta} \\ \frac{\partial x}{\partial \zeta} & \frac{\partial y}{\partial \zeta} & \frac{\partial z}{\partial \zeta} \end{bmatrix} = \begin{bmatrix} \frac{a}{2} & 0 & 0 \\ 0 & \frac{b}{2} & 0 \\ 0 & 0 & \frac{c}{2} \end{bmatrix}, \quad \mathbf{J}^{-1} = \begin{bmatrix} \frac{2}{a} & 0 & 0 \\ 0 & \frac{2}{b} & 0 \\ 0 & 0 & \frac{2}{c} \end{bmatrix}$$

Then the derivatives of the interpolation functions with respect to the global coordinates can be expressed in terms of the interpolation functions with respect to the natural coordinates as

$$\begin{Bmatrix} \frac{\partial \psi_i^e}{\partial x} \\ \frac{\partial \psi_i^e}{\partial y} \\ \frac{\partial \psi_i^e}{\partial z} \end{Bmatrix} = \mathbf{J}^{-1} \begin{Bmatrix} \frac{\partial \psi_i^e}{\partial \xi} \\ \frac{\partial \psi_i^e}{\partial \eta} \\ \frac{\partial \psi_i^e}{\partial \zeta} \end{Bmatrix} = \begin{Bmatrix} \frac{2}{a}\frac{\partial \psi_i^e}{\partial \xi} \\ \frac{2}{b}\frac{\partial \psi_i^e}{\partial \eta} \\ \frac{2}{c}\frac{\partial \psi_i^e}{\partial \zeta} \end{Bmatrix}$$

Hence, the coefficients K_{ij}^e can be expressed as

$$\begin{aligned} K_{ij}^e &= \int_0^a \int_0^b \int_0^c \left(k_x \frac{\partial \psi_i^e}{\partial x}\frac{\partial \psi_j^e}{\partial x} + k_y \frac{\partial \psi_i^e}{\partial y}\frac{\partial \psi_j^e}{\partial y} + k_z \frac{\partial \psi_i^e}{\partial z}\frac{\partial \psi_j^e}{\partial z} \right) d\mathbf{x} \\ &= k_x S_{ij}^{11} + k_y S_{ij}^{22} + k_z S_{ij}^{33} \end{aligned}$$

where $S_{ij}^{\alpha\beta}$ are defined as

$$\begin{aligned} S_{ij}^{11} &= \int_0^a \int_0^b \int_0^c \frac{\partial \psi_i^e}{\partial x}\frac{\partial \psi_j^e}{\partial x} \; dx\, dy\, dz \\ S_{ij}^{22} &= \int_0^a \int_0^b \int_0^c \frac{\partial \psi_i^e}{\partial y}\frac{\partial \psi_j^e}{\partial y} \; dx\, dy\, dz \\ S_{ij}^{33} &= \int_0^a \int_0^b \int_0^c \frac{\partial \psi_i^e}{\partial z}\frac{\partial \psi_j^e}{\partial z} \; dx\, dy\, dz \end{aligned}$$

The matrices $S_{ij}^{\alpha\beta}$ can now be evaluated using the Gauss quadrature:

$$\begin{aligned} S_{ij}^{11} &= \int_0^a \int_0^b \int_0^c \frac{\partial \psi_i^e}{\partial x}\frac{\partial \psi_j^e}{\partial x} \; dx\, dy\, dz = \frac{bc}{2a} \int_{-1}^1 \int_{-1}^1 \int_{-1}^1 \frac{\partial \psi_i^e}{\partial \xi}\frac{\partial \psi_j^e}{\partial \xi} \; d\xi\, d\eta\, d\zeta \\ S_{ij}^{22} &= \int_0^a \int_0^b \int_0^c \frac{\partial \psi_i^e}{\partial y}\frac{\partial \psi_j^e}{\partial y} \; dx\, dy\, dz = \frac{ac}{2b} \int_{-1}^1 \int_{-1}^1 \int_{-1}^1 \frac{\partial \psi_i^e}{\partial \eta}\frac{\partial \psi_j^e}{\partial \eta} \; d\xi\, d\eta\, d\zeta \\ S_{ij}^{33} &= \int_0^a \int_0^b \int_0^c \frac{\partial \psi_i^e}{\partial z}\frac{\partial \psi_j^e}{\partial z} \; dx\, dy\, dz = \frac{ab}{2c} \int_{-1}^1 \int_{-1}^1 \int_{-1}^1 \frac{\partial \psi_i^e}{\partial \zeta}\frac{\partial \psi_j^e}{\partial \zeta} \; d\xi\, d\eta\, d\zeta \end{aligned}$$

PROPRIETARY MATERIAL. © The McGraw-Hill Companies, Inc. All rights reserved.

The coefficients $S_{ij}^{\alpha\beta}$ can be evaluated using the interpolation functions listed in Eq. (14.3.31)

$$\mathbf{S}^{11} = \frac{bc}{36a}\begin{bmatrix} 4 & -4 & -2 & 2 & 2 & -2 & -1 & 1 \\ -4 & 4 & 2 & -2 & -2 & 2 & 1 & -1 \\ -2 & 2 & 4 & -4 & -1 & 1 & 2 & -2 \\ 2 & -2 & -4 & 4 & 1 & -1 & -2 & 2 \\ 2 & -2 & -1 & 1 & 4 & -4 & -2 & 2 \\ -2 & 2 & 1 & -1 & -4 & 4 & 2 & -2 \\ -1 & 1 & 2 & -2 & -2 & 2 & 4 & -4 \\ 1 & -1 & -2 & 2 & 2 & -2 & -4 & 4 \end{bmatrix}$$

$$\mathbf{S}^{22} = \frac{ac}{36b}\begin{bmatrix} 4 & 2 & -2 & -4 & 2 & 1 & -1 & -2 \\ 2 & 4 & -4 & -2 & 1 & 2 & -2 & -1 \\ -2 & -4 & 4 & 2 & -1 & -2 & 2 & 1 \\ -4 & -2 & 2 & 4 & -2 & -1 & 1 & 2 \\ 2 & 1 & -1 & -2 & 4 & 2 & -2 & -4 \\ 1 & 2 & -2 & -1 & 2 & 4 & -4 & -2 \\ -1 & -2 & 2 & 1 & -2 & -4 & 4 & 2 \\ -2 & -1 & 1 & 2 & -4 & -2 & 2 & 4 \end{bmatrix}$$

$$\mathbf{S}^{33} = \frac{ab}{36c}\begin{bmatrix} 4 & 2 & 1 & 2 & -4 & -2 & -1 & -2 \\ 2 & 4 & 2 & 1 & -2 & -4 & -2 & -1 \\ 1 & 2 & 4 & 2 & -1 & -2 & -4 & -2 \\ 2 & 1 & 2 & 4 & -2 & -1 & -2 & -4 \\ -4 & -2 & -1 & -2 & 4 & 2 & 1 & 2 \\ -2 & -4 & -2 & -1 & 2 & 4 & 2 & 1 \\ -1 & -2 & -4 & -2 & 1 & 2 & 4 & 2 \\ -2 & -1 & -2 & -4 & 2 & 1 & 2 & 4 \end{bmatrix}$$

Similarly, the source vector $\mathbf{f}^e$ can be computed

$$\mathbf{F}^e = \frac{abc}{8}\begin{Bmatrix} 1 \\ 1 \\ 1 \\ 1 \\ 1 \\ 1 \\ 1 \\ 1 \end{Bmatrix}$$

PROPRIETARY MATERIAL. © The McGraw-Hill Companies, Inc. All rights reserved.

SOLUTIONS MANUAL

for

An Introduction to The Finite Element Method

(Third Edition)

by

J. N. REDDY

Department of Mechanical Engineering
Texas A & M University
College Station, Texas 77843-3123

PROPRIETARY AND CONFIDENTIAL

This Manual is the proprietary property of The McGraw-Hill Companies, Inc. ("McGraw-Hill") and protected by copyright and other state and federal laws. By opening and using this Manual the user agrees to the following restrictions, and if the recipient does not agree to these restrictions, the Manual should be promptly returned unopened to McGraw-Hill: **This Manual is being provided only to authorized professors and instructors for use in preparing for the classes using the affiliated textbook. No other use or distribution of this Manual is permitted. This Manual may not be sold and may not be distributed to or used by any student or other third party. No part of this Manual may be reproduced, displayed or distributed in any form or by any means, electronic or otherwise, without the prior written permission of the McGraw-Hill.**

McGraw-Hill, New York, 2005