The atomic masses, based on the exact number 12.00000 as the assigned atomic mass of the principal isotope of carbon, ^{12}C, are the most recent (1961) values adopted by the International Union of Pure and Applied Chemistry. The unit of mass used in this table is called *atomic mass*

Group→		I	II	III	IV
Period	Series				
1	1	1 H 1.00797			
2	2	3 Li 6.939	4 Be 9.0122	5 B 10.811	6 C 12.01115
3	3	11 Na 22.9898	12 Mg 24.312	13 Al 26.9815	14 Si 28.086
4	4	19 K 39.102	20 Ca 40.08	21 Sc 44.956	22 Ti 47.90
	5	29 Cu 63.54	30 Zn 65.37	31 Ga 69.72	32 Ge 72.59
5	6	37 Rb 85.47	38 Sr 87.62	39 Y 88.905	40 Zr 91.22
	7	47 Ag 107.870	48 Cd 112.40	49 In 114.82	50 Sn 118.69
6	8	55 Cs 132.905	56 Ba 137.34	57–71 Lanthanide series*	72 Hf 178.49
	9	79 Au 196.967	80 Hg 200.59	81 Tl 204.37	82 Pb 207.19
7	10	87 Fr [223]	88 Ra [226.05]	89–Actinide series**	

* Lanthanide series:	57 La 138.91	58 Ce 140.12	59 Pr 140.907	60 Nd 144.24	61 Pm [147]	62 Sm 150.35
** Actinide series:	89 Ac [227]	90 Th 232.038	91 Pa [231]	92 U 238.03	93 Np [237]	94 Pu [242]

Table A–2 Fundamental Constants

Constant	Symbol	Value
Velocity of light	c	2.9979×10^{8} m s^{-1}
Elementary charge	e	1.6021×10^{-19} C
Electron rest mass	m_e	9.1091×10^{-31} kg
Proton rest mass	m_p	1.6725×10^{-27} kg
Neutron rest mass	m_n	1.6748×10^{-27} kg
Planck constant	h	6.6256×10^{-34} J s
	$\hbar = h/2\pi$	1.0545×10^{-34} J s
Charge-to-mass ratio for electron	e/m_e	1.7588×10^{11} kg^{-1} C
Quantum charge ratio	h/e	4.1356×10^{-15} J s C^{-1}
Bohr radius	a_0	5.2917×10^{-11} m
Compton wavelength:		
of electron	$\lambda_{C,e}$	2.4262×10^{-12} m
of proton	$\lambda_{C,p}$	1.3214×10^{-15} m
Rydberg constant	R	1.0974×10^{7} m^{-1}

unit (amu): 1 amu = 1.6604×10^{-27} kg. The atomic mass of carbon is 12.01115 on this scale because it is the average of the different isotopes naturally present in carbon. (For artificially produced elements, the approximate atomic mass of the most stable isotope is given in brackets.)

V	VI	VII	VIII			0
						2 He 4.0026
7 N 14.0067	8 O 15.9994	9 F 18.9984				10 Ne 20.183
15 P 30.9738	16 S 32.064	17 Cl 35.453				18 A 39.948
23 V 50.942	24 Cr 51.996	25 Mn 54.9380	26 Fe 55.847	27 Co 58.9332	28 Ni 58.71	
33 As 74.9216	34 Se 78.96	35 Br 79.909				36 Kr 83.80
41 Nb 92.906	42 Mo 95.94	43 Tc [99]	44 Ru 101.07	45 Rh 102.905	46 Pd 106.4	
51 Sb 121.75	52 Te 127.60	53 I 126.9044				54 Xe 131.30
73 Ta 180.948	74 W 183.85	75 Re 186.2	76 Os 190.2	77 Ir 192.2	78 Pt 195.09	
83 Bi 208.980	84 Po [210]	85 At [210]				86 Rn [222]

63 Eu 151.96	64 Gd 157.25	65 Tb 158.924	66 Dy 162.50	67 Ho 164.930	68 Er 167.26	69 Tm 168.934	70 Yb 173.04	71 Lu 174.97
95 Am [243]	96 Cm [245]	97 Bk [249]	98 Cf [249]	99 Es [253]	100 Fm [255]	101 Md [256]	102 No	103

Constant	Symbol	Value
Bohr magneton	μ_B	9.2732×10^{-24} J T^{-1}
Avogadro constant	N_A	6.0225×10^{23} mol^{-1}
Boltzmann constant	k	1.3805×10^{-23} J °K^{-1}
Gas constant	R	8.3143 J °K^{-1} mol^{-1}
Ideal gas normal volume (STP)	V_0	2.2414×10^{-2} m^3 mol^{-1}
Faraday constant	F	9.6487×10^4 C mol^{-1}
Coulomb constant	K_e	8.9874×10^9 N m^2 C^{-2}
Vacuum permittivity	ϵ_0	8.8544×10^{-12} N^{-1} m^{-2} C^2
Magnetic constant	K_m	1.0000×10^{-7} m kg C^{-2}
Vacuum permeability	μ_0	1.3566×10^{-6} m kg C^{-2}
Gravitational constant	γ	6.670×10^{-11} N m^2 kg^{-2}
Acceleration of gravity at sea level and at equator	g	9.7805 m s^{-2}

Numerical constants: $\pi = 3.1416$; $e = 2.7183$; $\sqrt{2} = 1.4142$; $\sqrt{3} = 1.7320$

FUNDAMENTAL UNIVERSITY PHYSICS

VOLUME I

MECHANICS

FUNDAMENTAL

ADDISON-WESLEY PUBLISHING COMPANY

UNIVERSITY PHYSICS

VOLUME I
MECHANICS

MARCELO ALONSO
Department of Scientific Affairs, Organization of American States

EDWARD J. FINN
Department of Physics, Georgetown University

37 3 4 3
V.1

READING, MASSACHUSETTS · PALO ALTO · LONDON · DON MILLS, ONTARIO

4

This book is in the

ADDISON-WESLEY SERIES IN PHYSICS

Consulting editor

DAVID LAZARUS

Copyright © 1967, by Addison-Wesley. All rights reserved. This book, or parts thereof, may not be reproduced in any form without written permission of the publisher. Printed in the United States of America. Published simultaneously in the Dominion of Canada. Library of Congress Catalog Card Number 66-10828.

FOREWORD

Physics is a fundamental science which has a profound influence on all the other sciences. Therefore, not only must physics majors and engineering students have a thorough understanding of its fundamental ideas, but anyone who plans a career in science (including students majoring in biology, chemistry, and mathematics) must have this same understanding.

The primary purpose of the general physics course (and perhaps the only reason it is in the curriculum) is to give the student a unified view of physics. This should be done without bringing in too many details, but by analyzing the basic principles, their implications, and their limitations. The student will learn specific applications in the more specialized courses that follow. Thus this book presents what we believe are the fundamental ideas that constitute the core of today's physics. We gave careful consideration to the recommendations of the Commission on College Physics in selecting the subject matter and its method of presentation.

Until recently, physics has been taught as if it were a conglomeration of several sciences, more or less related, but without any real unifying point of view. The traditional division into (the "science" of) mechanics, heat, sound, optics, electromagnetism, and modern physics no longer has any justification. We have departed from this traditional approach. Instead, we follow a logical and unified presentation, emphasizing the conservation laws, the concepts of fields and waves, and the atomic view of matter. The special theory of relativity is used extensively throughout the text as one of the guiding principles that must be met by any physical theory.

The subject matter has been divided into five parts: (1) Mechanics, (2) Interactions and Fields, (3) Waves, (4) Quantum Physics, and (5) Statistical Physics. We start with mechanics, in order to set up the fundamental principles needed to describe the motions we observe around us. Then, since all phenomena in nature are the result of interactions, and these interactions are analyzed in terms of fields, in Part 2 we consider the kinds of interactions we understand best: gravitational and electromagnetic interactions, which are the interactions responsible for most of the macroscopic phenomena we observe. We discuss electromagnetism in considerable detail, concluding with the formulation of Maxwell's equations. In Part 3 we discuss wave phenomena as a consequence of the field concept. It is in this part that we have included much of the material usually covered under the headings of acoustics and optics. The emphasis, however, has been placed on electromagnetic waves as a natural extension of Maxwell's equations. In Part 4 we analyze the structure of matter—that is, atoms, molecules, nuclei, and fundamental particles—an analysis preceded by the necessary background in quantum mechanics. Finally, in Part 5, we talk about the properties of matter in bulk. First we present the principles of sta-

tistical mechanics, and apply them to some simple, but fundamental, cases. We discuss thermodynamics from the point of view of statistical mechanics, and conclude with a chapter on the thermal properties of matter, showing how the principles of statistical mechanics and of thermodynamics are applied.

This text is novel not only in its approach but also in its content, since we have included some fundamental topics not found in most general physics texts and deleted others that are traditional. The mathematics used can be found in any standard textbook on calculus. We assume that the student has had a minimal introduction to calculus and is taking a concurrent course in the subject. Many applications of fundamental principles, as well as a few more advanced topics, appear in the form of worked-out examples. These may be discussed at the instructor's convenience or proposed on a selective basis, thus allowing a greater flexibility in organizing the course.

The curricula for all sciences are under great pressure to incorporate new subjects that are becoming more relevant. We expect that this book will relieve this pressure by raising the level of the student's understanding of physical concepts and his ability to manipulate the corresponding mathematical relations. This will permit many intermediate courses presently offered in the undergraduate curriculum to be upgraded. The traditional undergraduate courses in mechanics, electromagnetism, and modern physics will benefit most from this upgrading. Thus the student will finish his undergraduate career at a higher level of knowledge than formerly—an important benefit for those who terminate their formal education at this point. Also there will now be room for newer and more exciting courses at the graduate level. This same trend is found in the more recent basic textbooks in other sciences for freshman and sophomore courses.

The text is designed for a three-semester course. It may also be used in those schools in which a two-semester general physics course is followed by a one-semester course in modern physics, thus offering a more unified presentation over the three semesters. For convenience the text has been divided into three volumes, each roughly corresponding to a semester. Volume I treats mechanics and the gravitational interaction. Volume II deals with electromagnetic interactions and waves, essentially covering the subjects of electromagnetism and optics. Quantum and statistical physics, including thermodynamics, are covered in Volume III. Although the three volumes are closely related and form a unified text, each one can be considered as a self-contained introductory text. In particular, Volumes I and II together are the equivalent of a two-semester general physics course, covering nonquantum physics.

We hope that this text will assist progressive physics instructors who are constantly struggling to improve the courses they teach. We also hope that it will stimulate the many students who deserve a presentation of physics which is more mature than that of the traditional course.

We want to express our gratitude to all those who, because of their assistance and encouragement, have made the completion of this work possible. We recognize our distinguished colleagues, in particular Professors D. Lazarus and H. S. Robertson, who read the original manuscript; their criticism and comments helped to correct and improve many aspects of the text. We are also grateful for the ability and dedication of the staff of Addison-Wesley. Last, but not least, we sincerely thank our wives, who have so patiently stood by us.

Washington, D.C. M.A.
June 1966 E.J.F.

NOTE TO THE INSTRUCTOR

To assist the instructor in setting up his course, we present a brief outline of this volume and some suggestions concerning the important concepts in each chapter. As indicated in the foreword, this physics course has been developed in an integrated form so that the student quickly recognizes the few basic ideas on which physics is based (for example, the conservation laws, and the fact that physical phenomena can be reduced to interactions between fundamental particles). The student should recognize that to become a physicist or an engineer he must attain a clear understanding of these ideas and develop the ability to manipulate them.

The basic subject matter forms the body of the text. Many worked-out examples have been included in each chapter; some are simple numerical applications of the theory being discussed, while others are either actual extensions of the theory or mathematical derivations. It is recommended that in his first reading of a chapter the student be advised to omit *all* examples. Then, on the second reading, he should look into the examples chosen by the instructor. In this way the student will grasp the basic ideas separate from their applications or extensions.

There is a problem section at the end of each chapter. Some of them are more difficult than the average general physics problem and others are extremely simple. They are arranged in an order that roughly corresponds to the sections of the chapter, with a few more difficult problems at the end. The large number of varied problems gives the instructor more freedom of choice in matching problems with his own students' abilities.

We suggest that the instructor establish a reserve shelf based on the reference material listed at the end of each chapter, and encourage the student to use it so that he may develop the habit of checking source material, getting more than one interpretation of a topic, and acquiring historical information about physics.

The present volume is designed to cover the first semester. (However, Chapter 13 *can* be postponed until the second semester.) We have suggested as a guide, on the basis of our own experience, the number of lecture hours needed to comfortably cover the material. The time listed (43 lecture hours) does not include recitation or testing time. A brief comment on each chapter follows.

Chapter 1. *Introduction* (1 hour)

This chapter is designed to give the student a preliminary insight into the science he is about to study; hence he should read it carefully. A brief classroom discussion should be organized by the instructor.

Chapter 2. *Measurement and Units* (1 hour)

Following the recommendations of the commission on Symbols, Units, and Nomenclature of IUPAP, we have adhered to the MKSC system of units. Whenever we introduce a new MKSC unit in later chapters, we give its equivalent in the cgs and the British systems. The problems in this chapter are designed to give the student a feeling of the "large" and the "small."

Chapter 3. *Vectors* (3 hours)

The basic ideas of vector algebra are introduced and illustrated by problems in kinematics. Sections 3.8, 3.9, and 3.10 may be postponed until these concepts are needed for the first time in the text. Because of its limited physical motivation, the chapter may be a difficult one for the student. The teacher should, however, impress on him the necessity for vector notation, and seek to enliven the lectures with physical examples.

Chapter 4. *Forces* ($2\frac{1}{2}$ hours)

We put this chapter early in the book for several reasons. First, it provides a familiar application of vectors. Second, it allows time for the student to learn some basic calculus before embarking on the study of kinematics. Third, it permits an uninterrupted development of mechanics in Chapters 5 through 12. For courses in which this material is not required, this chapter can be omitted, with the exception of Sections 4.3 (torque) and 4.8 (center of mass). If desired, the chapter could be assigned after Section 7.6, but we do not recommend this procedure.

PART 1. MECHANICS

In Chapters 5 through 12, the text develops the major concepts of classical and relativistic mechanics. We first discuss, as a simplification, the mechanics of a single particle, but we cover many-particle systems in great detail. We emphasize the distinction between the ideal single-particle system and the real many-particle system.

Chapter 5. *Kinematics* ($3\frac{1}{2}$ hours)

This chapter must be covered in depth, and entirely. The student must understand the vector nature of velocity and acceleration and their relations to the path. The instructor should stress that, when the time rate of change of a vector is computed, one must consider both the changes in magnitude *and* in direction. The calculus required for this chapter is relatively simple. If the instructor wishes, he can postpone Section 5.11 and discuss it just before Section 7.14.

Chapter 6. *Relative Motion* (4 hours)

We consider relative motion from a kinematical point of view. This chapter precedes the one on dynamics, so that the student grasps the importance of frames of reference.

Sections 6.4 and 6.5 (on rotational frames) may be omitted and Sections 6.6 and 6.7 (on relativistic frames) may be postponed (if desired) until Chapter 11.

Chapter 7. *Dynamics of a Particle* (4 hours)

This is one of the more important chapters, and the student should digest it thoroughly. The principle of conservation of momentum is given more relevance than the relation $F = ma$. The limitations of the laws of motion and the concepts of interactions and forces must be analyzed very carefully.

Chapter 8. *Work and Energy* (3 hours)

This chapter is, in a sense, an extension of Chapter 7, and must also be understood thoroughly. Section 8.10 (central forces) may be omitted or postponed until Chapter 13. The more important ideas are the concepts of energy and the conservation of energy for a single particle. We introduce the virial theorem for a particle here, because this theorem is being used more and more extensively in both physics and chemistry.

Chapter 9. *Dynamics of a System of Particles* (5 hours)

For simplicity, most of the results are derived for two particles and then, by similarity, these results are extended to an arbitrary number of particles. We introduce the concepts of temperature, heat, and pressure as convenient statistical concepts to describe the behavior of systems composed of a very large number of particles. This allows us to use these concepts throughout the rest of the book. The equation of state of a gas is derived from the virial theorem because this more clearly reveals the role of internal forces; a more traditional approach is also presented in Example 9.17. The chapter closes with a section on fluid motion that may be omitted if desired.

Chapter 10. *Dynamics of a Rigid Body* ($3\frac{1}{2}$ hours)

Great emphasis should be placed on the precession of angular momentum under an applied torque. The section on gyroscopic motion is also important, since the ideas developed are used many times.

Chapter 11. *High-Energy Dynamics* ($3\frac{1}{2}$ hours)

This is essentially a chapter on relativistic dynamics, emphasizing the concepts of system velocity (or C-frame) and of the Lorentz transformation of energy and momentum. This is naturally an important chapter in today's physics.

Chapter 12. *Oscillatory Motion* (5 hours)

Simple harmonic motion is first presented kinematically and then dynamically. This chapter can either be discussed in its entirety at this time (end of first semester) or limited to the first few sections only, deferring the remaining sections until they are required for later chapters. We recommend the first alternative. The first semester could be concluded with this chapter.

PART 2. INTERACTIONS AND FIELDS

This part is dedicated to a study of gravitational and electromagnetic interactions, which are discussed in Chapters 13 through 17. Here we stress the concept of a field as a useful tool for physics. Since we realize that many instructors like to discuss gravitation during the first semester and immediately after completing mechanics, we have included Chapter 13 in this volume, reserving the study of the electromagnetic interaction (Chapters 14 through 17) for the second semester and Volume II.

Chapter 13. *Gravitational Interaction* (4 hours)

This is a brief account of gravitation, which illustrates the application of mechanics to a particular interaction. It also serves to introduce the student to the concept of field. The chapter is written in such a way that it ties in, in a natural way, with the discussion of electromagnetic interaction in Volume II. Sections 13.5 and 13.7 may be omitted without loss of continuity. Section 13.8 provides a brief account of the ideas of the theory of general relativity.

NOTE TO THE STUDENT

This is a book about the fundamentals of physics written for students majoring in science or engineering. The concepts and ideas you learn from it will, in all probability, become part of your professional life and your way of thinking. The better you understand them, the easier the rest of your undergraduate and graduate education will be.

The course in physics that you are about to begin is naturally more advanced than your high-school physics course. You must be prepared to tackle numerous difficult puzzles. To grasp the laws and techniques of physics may be, at times, a slow and painful process. Before you enter those regions of physics that appeal to your imagination, you must master other, less appealing, but very fundamental ones, without which you cannot use or understand physics properly.

You should keep two main objectives before you while taking this course. First: become thoroughly familiar with the handful of basic laws and principles that constitute the core of physics. Second: develop the ability to manipulate these ideas and apply them to concrete situations; in other words, to think and act as a physicist. You can achieve the first objective mainly by reading and re-reading those sections in large print in the text. To help you attain the second objective, there are many worked-out examples, in small print, throughout the text, and there are the homework problems at the end of each chapter. We strongly recommend that you first read the main text and, once you are acquainted with it, proceed with those examples and problems assigned by the instructor. The examples either illustrate an application of the theory to a concrete situation, or extend the theory by considering new aspects of the problem discussed. Sometimes they provide some justification for the theory.

The problems at the end of each chapter vary in degree of difficulty. They range from the very simple to the complex. In general, it is a good idea to try to solve a problem in a symbolic or algebraic form first, and insert numerical values only at the end. If you cannot solve an assigned problem in a reasonable time, lay the problem aside and make a second attempt later. For those few problems that refuse to yield a solution, you should seek help. One source of self-help that will teach you the *method* of problem-solving is the book *How to Solve It* (second edition), by G. Polya (Garden City, N. Y.: Doubleday, 1957).

Physics is a quantitative science, which requires mathematics for the expression of its ideas. All the mathematics used in this book can be found in a standard calculus text, and you should consult such a text whenever you do not understand a mathematical derivation. But by no means should you feel discouraged by a mathematical difficulty; in case of mathematical trouble, consult your instructor or a more advanced student. For the physical scientist and engineer, mathematics is a tool, and is second in importance

to understanding the physical ideas. For your convenience, some of the most useful mathematical relations are listed in an appendix at the end of the book.

All physical calculations must be carried out using a consistent set of units. In this book the MKSC system is used. Since it differs from the British system, you may find it unfamiliar at first. However, it requires very little effort to become acquainted with it. Also, this is the system officially approved for scientific work and used by the United States National Bureau of Standards in its publications. Be extremely careful to check the consistency of the units in all your calculations. Also, it is a good idea to use a slide rule from the start; the three-place accuracy of even the simplest slide rule will save you many hours of computation. In some instances, however, a slide rule may not provide the required accuracy.

A selected list of references is given at the end of each chapter. Consult them as often as possible. Some will help you to grasp the idea of physics as an evolving science, while others will amplify material in the text. In particular, you will find the book by Holton and Roller, *Foundations of Modern Physics* (Reading, Mass.: Addison-Wesley, 1958) particularly useful for information about the evolution of ideas in physics.

CONTENTS

Front End Papers

Periodic Table of the Elements; Fundamental Constants

Rear End Papers

Units and Symbols; Conversion Factors

Chapter 1 Introduction

What is physics? 2 □ The classical branches of physics 2 □ Our view of the universe 3 □ The relation of physics to other sciences 10 □ The experimental method 10

Chapter 2 Measurement and Units

Introduction 15 □ Measurement 15 □ Fundamental quantities and units 16 □ Density 20 □ Plane angles 21 □ Solid angles 22 □ Precision and accuracy 23 □ Measurement in the laboratory 25

Chapter 3 Vectors

Introduction 31 □ Concept of direction 31 □ Scalars and vectors 32 □ Addition of vectors 33 □ Components of a vector 36 □ Addition of several vectors 40 □ Application to kinematic problems 41 □ Scalar product 43 □ Vector product 46 □ Vector representation of an area 49

Chapter 4 Forces

Introduction 57 □ Composition of concurrent forces 57 □ Torque 58 □ Torque of several concurrent forces 60 □ Composition of forces applied to a rigid body 62 □ Composition of coplanar forces 63 □ Composition of parallel forces 64 □ Center of mass 66 □ Statics. Equilibrium of a particle 69 □ Statics. Equilibrium of a rigid body 70

PART 1 MECHANICS

Chapter 5 Kinematics

Introduction 84 □ Rectilinear motion: velocity 85 □ Rectilinear motion: acceleration 87 □ Vector representation of velocity and acceleration in rectilinear motion 89 □ Curvilinear motion: velocity 94 □ Curvilinear motion: acceleration 96 □ Motion under constant acceleration 98 □ Tangential and normal components of acceleration 101 □ Circular motion: angular velocity 104 □ Circular motion: angular acceleration 106 □ General curvilinear motion in a plane 108

Chapter 6 Relative Motion

Introduction 118 □ Relative velocity 118 □ Uniform relative translational motion 120 □ Uniform relative rotational motion 123 □ Motion relative to the earth 125 □ The Lorentz transformation 133 □ Transformation of velocities 136 □ Consequences of the Lorentz transformation 140

Chapter 7 Dynamics of a Particle

Introduction 152 □ The law of inertia 152 □ Linear momentum 154 □ Principle of conservation of momentum 154 □ Redefinition of mass 158 □ Newton's second and third laws; concept of force 159 □ Critique of the concept of force 161 □ Units of force 162 □ Frictional forces 165 □ Frictional forces in fluids 168 □ Systems with variable mass 171 □ Curvilinear motion 173 □ Angular momentum 178 □ Central forces 180 □ Equilibrium and rest 184

Chapter 8 Work and Energy

Introduction 196 □ Work 197 □ Power 200 □ Units of work and power 200 □ Kinetic energy 203 □ Work of a force constant in magnitude and direction 205 □ Potential energy 207 □ Conservation of energy of a particle 212 □ Rectilinear motion under conservative forces 214 □ Motion under conservative central forces 215 □ Discussion of potential energy curves 217 □ Nonconservative forces 221 □ The virial theorem for a single particle 224 □ Critique of the concept of energy 225

Chapter 9 Dynamics of a System of Particles

Introduction 233 □ Motion of the center of mass of a system of particles 233 □ Reduced mass 239 □ Angular momentum of a system of particles 242 □ Kinetic energy of a system of particles 247 □ Conservation of energy of a system of particles 248 □ Collisions 253 □ Many-particle systems: temperature 259 □ Many-particle systems: work 261 □ Many-particle systems: heat

263 □ Reformulation of the principle of conservation of energy for many-particle systems 264 □ The virial theorem for many particles 265 □ Equation of state of a gas 267 □ Fluid motion 271

Chapter 10 Dynamics of a Rigid Body

Introduction 286 □ Angular momentum of a rigid body 287 □ Calculation of the moment of inertia 290 □ Equation of motion for rotation of a rigid body 294 □ Kinetic energy of rotation 300 □ Gyroscopic motion 303

Chapter 11 High-Energy Dynamics

Introduction 317 □ Classical principle of relativity 317 □ Special principle of relativity 319 □ Momentum 320 □ Force 322 □ Energy 325 □ Transformation of energy and momentum 330 □ Transformation of force 332 □ Systems of particles 334 □ High-energy collisions 336

Chapter 12 Oscillatory Motion

Introduction 347 □ Kinematics of single harmonic motion 347 □ Force and energy in simple harmonic motion 351 □ Dynamics of simple harmonic motion 352 □ The simple pendulum 354 □ Compound pendulum 357 □ Superposition of two SHM: same direction, same frequency 359 □ Superposition of two SHM: same direction, different frequency 362 □ Superposition of two SHM: perpendicular directions 363 □ Coupled oscillators 367 □ Anharmonic oscillations 372 □ Damped oscillations 374 □ Forced oscillations 376 □ Impedance of an oscillator 380 □ Fourier analysis of periodic motion 382

PART 2 INTERACTIONS AND FIELDS

Chapter 13 Gravitational Interaction

Introduction 396 □ The law of gravitation 398 □ Inertial and gravitational mass 401 □ Gravitational potential energy 402 □ General motion under gravitational interaction 408 □ Gravitational field 413 □ Gravitational field due to a spherical body 419 □ Principle of equivalence 424 □ Gravitation and intermolecular forces 426

Appendix: Mathematical Relations; Tables A–3

Answers to Odd-Numbered Problems A–13

Index A–22

The Parts of all homogeneal hard Bodies which fully touch one another, stick together very strongly. And for explaining how this may be, some have invented hooked Atoms. . . . I had rather infer from their Cohesion, that their Particles attract one another by some Force, which in immediate Contact is exceeding strong, and reaches not far from the Particles with any sensible Effect. . . . There are therefore Agents in Nature able to make the Particles of Bodies stick together by very strong Attractions. And it is the Business of experimental Philosophy to find them out.

Optiks, BOOK 3, QUERY 31 (1703), NEWTON

1
INTRODUCTION

1.1 What Is Physics?
1.2 The Classical Branches of Physics
1.3 Our View of the Universe
1.4 The Relation of Physics to Other Sciences
1.5 The Experimental Method

Studying physics is an exciting and challenging adventure. To be a professional physicist is even more exciting. Perhaps it is one of the most pleasing activities of the human intellect since, in the authors' opinion, nothing appeals more to the mind than learning about the world we live in and unraveling the secrets of nature.

It may seem unnecessary at this point to tell the student what physics is about, why it is so challenging and interesting, or what its methods are, since he already has some familiarity with this science. However, precisely because of his familiarity with physics, it is desirable to analyze and review the objectives and methods of this science before embarking on its study at a somewhat higher level. That is what we shall briefly do in this chapter.

1.1 What Is Physics?

The word *physics* comes from a Greek term meaning *nature*, and therefore physics should be a science dedicated to the study of all natural phenomena. In fact, until early in the nineteenth century physics was understood in this broad sense, and it was called "natural philosophy." However, during the nineteenth century and until very recently, physics was restricted to the study of a more limited group of phenomena, designated by the name of *physical phenomena* and loosely defined as processes in which the *nature* of the participating substances does not change. This somewhat awkward definition of physics has been gradually discarded, returning to the broader and more fundamental concept of previous times. Accordingly, we may say that *physics is a science whose objective is to study the components of matter and their mutual interactions. In terms of these interactions the scientist explains the properties of matter in bulk, as well as the other natural phenomena we observe.*

As he progresses through this course, the student will witness the way this program is developed from basic and general principles and applied to the understanding of a large variety of physical phenomena, apparently unrelated but obeying the same fundamental laws. Once these great principles are clearly understood the student will be able to attack new problems with great economy of thought and effort.

1.2 The Classical Branches of Physics

Man, having an inquiring mind, has always had a great curiosity about how nature works. At the beginning his only sources of information were his senses, and therefore he classified the phenomena he observed according to the way he sensed them. *Light* was related to the act of vision and *optics* was developed as a more or less independent science associated with this act. *Sound* was related to the act of hearing and *acoustics* developed as a correlative science. *Heat* was related to another kind of physical sensation, and for many years the study of heat (called *thermodynamics*) was yet another autonomous branch of physics. *Motion*, of course, is the most common of all directly observed phenomena, and the science c

motion, *mechanics*, developed earlier than any other branch of physics. The motion of the planets caused by their gravitational interactions, as well as the free fall of bodies, was very nicely explained by the laws of mechanics; therefore *gravitation* was traditionally discussed as a chapter of mechanics. *Electromagnetism*, not being directly related to any sensory experience—in spite of being responsible for most of them—did not appear as an organized branch of physics until the nineteenth century.

So physics in the nineteenth century appeared to be divided into a few (called *classical*) sciences or branches: mechanics, heat, sound, optics, and electromagnetism, with little or no connection between them, although mechanics was, quite properly, the guiding principle for all of them. And physics was so taught to students until very recently. Lately a new branch, called *modern physics*, which covers the developments of twentieth-century physics, has been added to these "classical" branches.

The "classical" branches of physics are, and will continue to be, very important fields of specialization and professional activity, but it no longer makes sense to study the fundamentals of physics in such a compartmentalized manner. The very same set of phenomena included under electromagnetism and modern physics have produced a new trend of thought that looks at physical phenomena from a unified and more logical point of view, and this is one of the great achievements of the twentieth century. This unified presentation of physics calls for a reappraisal of classical physics from a *modern* point of view—not a division of physics into *classical* and *modern*. There will always be a *modern physics* in the sense that there will be contemporary physics being developed in one's time. This modern physics will require at each instant a revision and a reevaluation of previous ideas and principles. *Classical* and *modern* physics are to be integrated at each stage into a single body of knowledge. Physics will always be a whole that must be considered in a consistent and logical way.

1.3 Our View of the Universe

At present we consider matter to be composed of a handful of fundamental (or elementary) particles and all bodies, both living and inert, to be made up of different groupings or arrangements of such particles. Three of these fundamental particles are especially important because of their presence in many common phenomena: *electrons*, *protons*, and *neutrons*.

There are a few other fundamental particles (some physicists think there are too many!) but they have a transient life, being continuously created and destroyed (and thus are termed unstable), and apparently they do not participate directly in most of the phenomena we observe around us (Fig. 1–1). Their existence is made manifest only by means of rather elaborate observational techniques, and their role in the general scheme is not yet completely understood. Some of these, such as the *pion*, are vital because of the role they play in the interactions between protons and neutrons. Fundamental particle research is of great importance today in obtaining some clue to the structure of the universe.

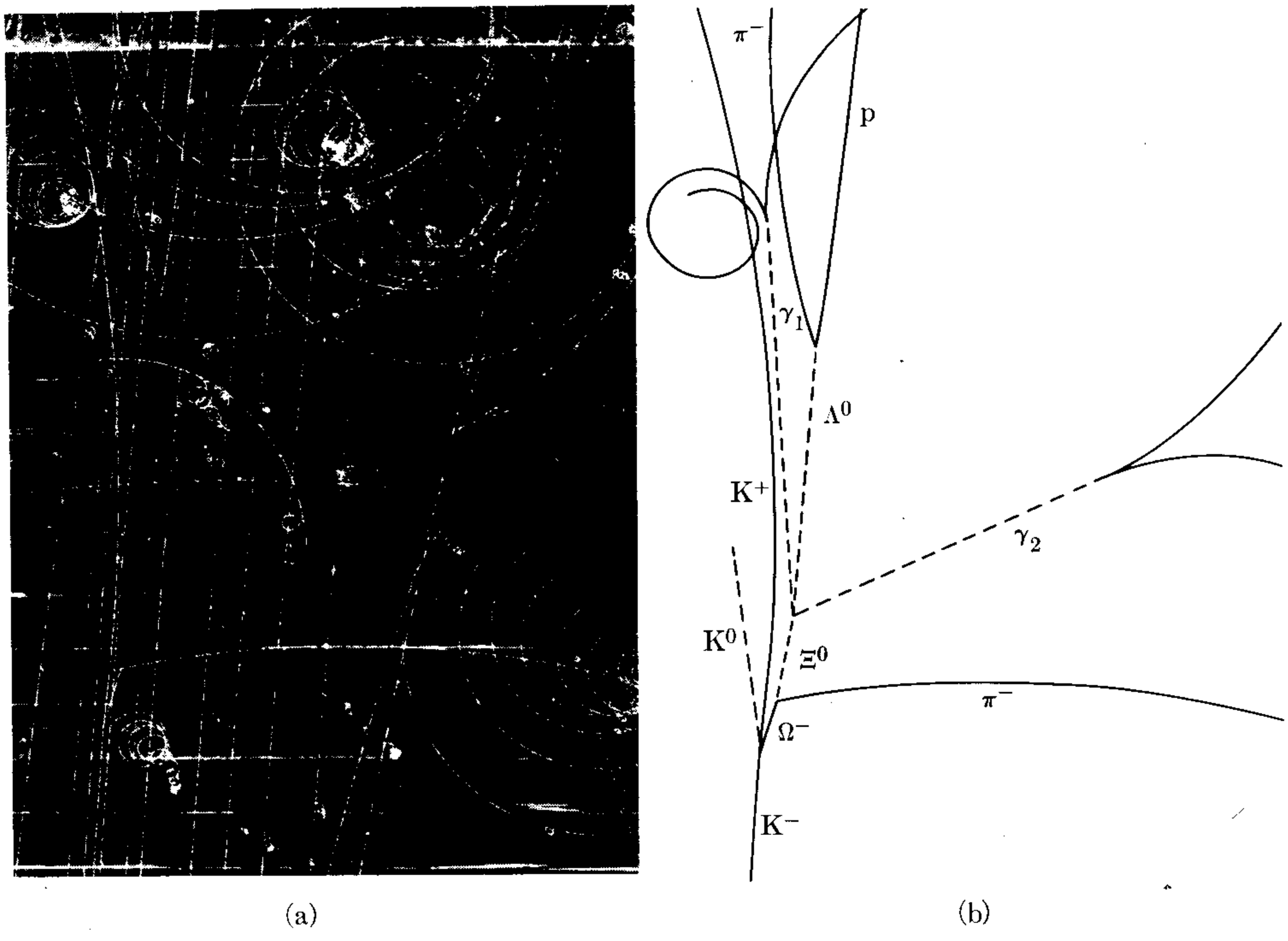

Fig. 1–1. (a) Fundamental particle tracks in 80-inch (2 m) liquid-hydrogen bubble chamber, which is placed in a strong magnetic field that forces the charged particles to follow curved paths. These tracks are analyzed, and from the analyses the properties of the different particles are derived. This photograph, taken in 1964, is historic. It provided the first evidence of the existence of the omega minus (Ω^-) particle, which had previously been predicted on a theoretical basis. (b) The line diagram shows the more important events registered in the photograph. The Ω^- track is the short line near the bottom of the picture. The particles corresponding to the other tracks are also identified. (Photograph courtesy Brookhaven National Laboratory.)

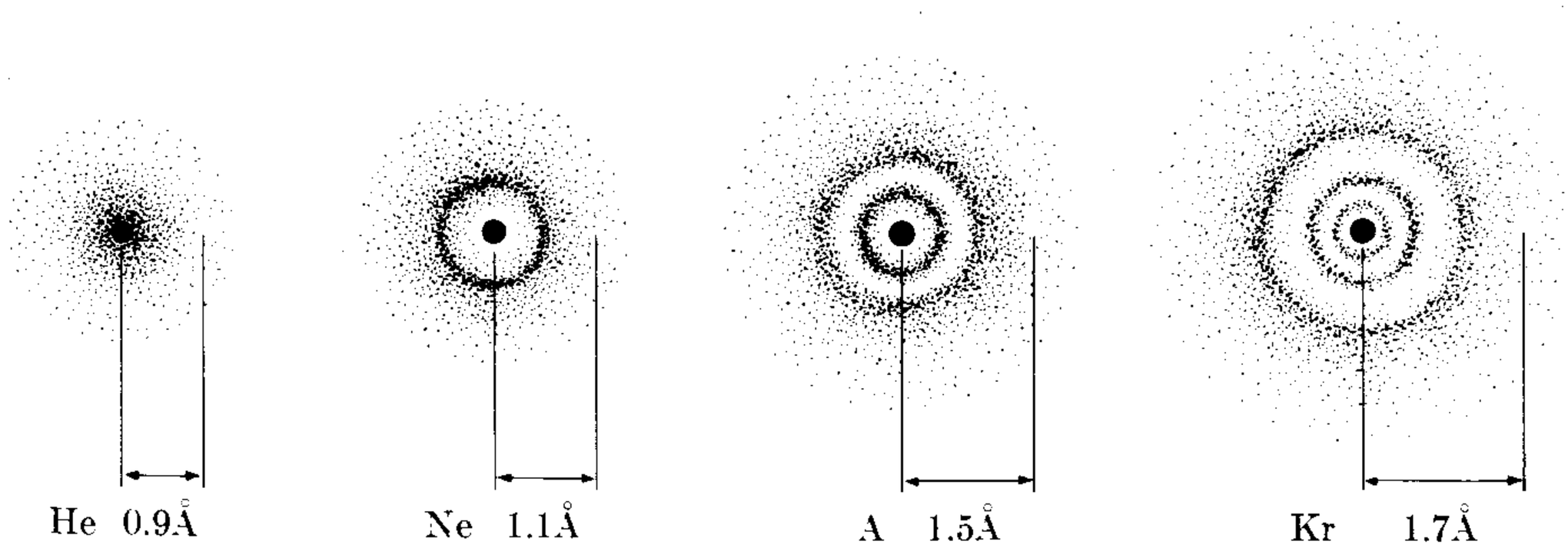

Fig. 1–2. Arrangements of electrons around the nucleus in some simple atoms (helium, He; neon, Ne; argon A; krypton, Kr). Since electrons do not follow well-defined paths, the dark regions are those more likely to be occupied by the electrons (1 Å = 1 angstrom = 10^{-10} m).

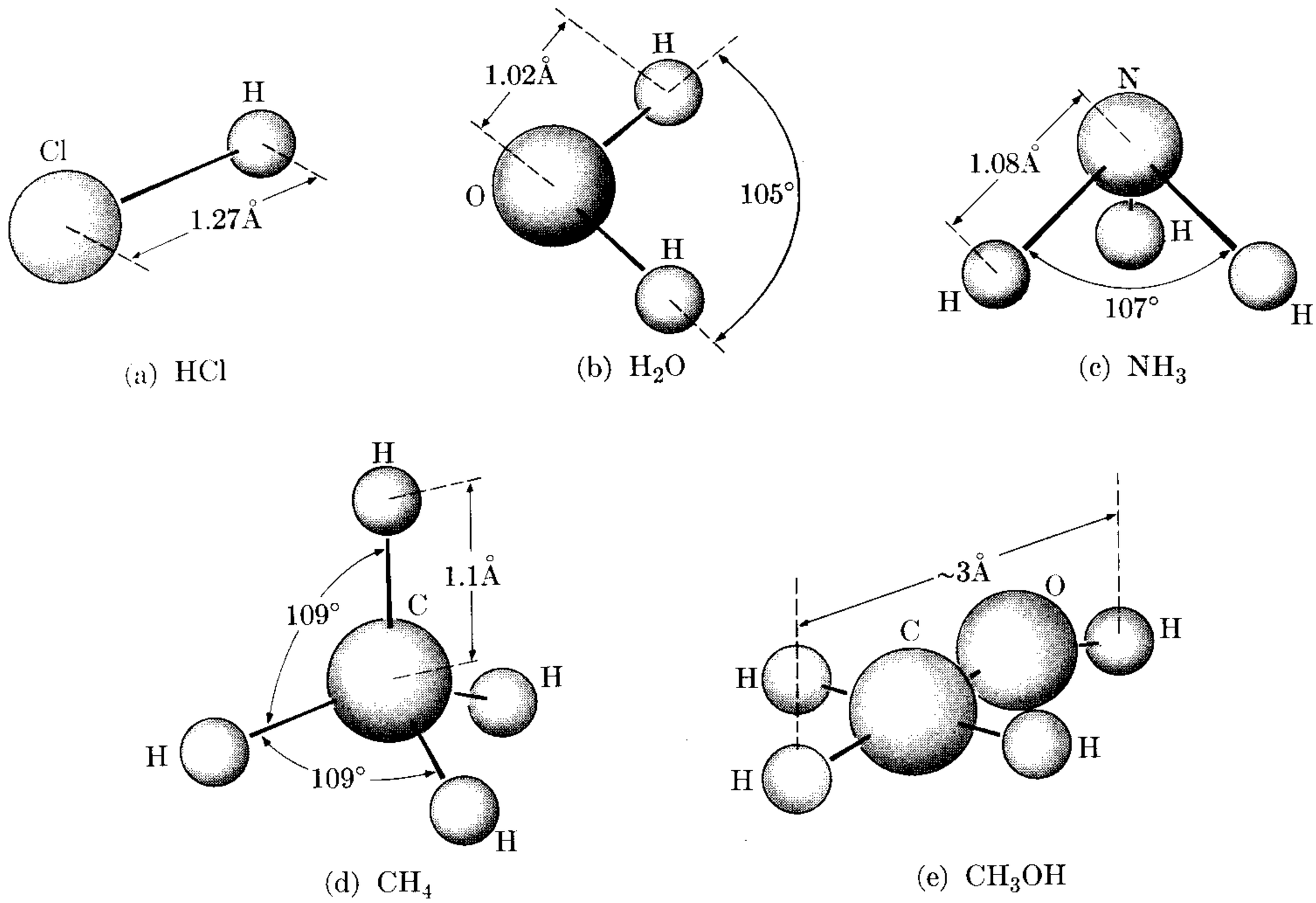

Fig. 1–3. Some relatively simple molecules. The inner electrons remain attached to the respective atoms, but the outer ones either move in the space between two atoms or more or less freely over the molecule (1 Å = 1 angstrom = 10^{-10} m).

Using an oversimplified language, we may say that the three particles, electron, proton, and neutron, are present in well-defined groups called *atoms*, with the protons and neutrons clustered in a very small central region called the *nucleus* (Fig. 1–2). About 104 distinct "species" of atoms have been recognized (see Table A–1), but there are about 1300 different "varieties" of atoms, called *isotopes*. Atoms in turn form other aggregates called *molecules*, of which several thousands of different kinds are known to exist. The number of different molecules seems to be extremely large, since more and more new molecules are synthesized every day in chemical laboratories. Some molecules contain just a few atoms, such as hydrochloric acid [whose molecules are formed of one atom of hydrogen and one atom of chlorine (Fig. 1–3)], while others may have as many as several hundred atoms, such as the proteins, enzymes, and the nucleic acids [DNA and RNA (Fig. 1–4)] or some organic polymers such as polyethylene or polyvinylchloride (PVC). Finally, molecules group together forming bodies (or matter in bulk), appearing to us as solids, liquids, or gases* (Fig. 1–5) although this classification or division is not a rigid one.

---

* Another state of matter is the *plasma*, consisting of a gaseous mixture of positive and negative ions (or charged particles). Most of the matter in the universe is in the form of a plasma.

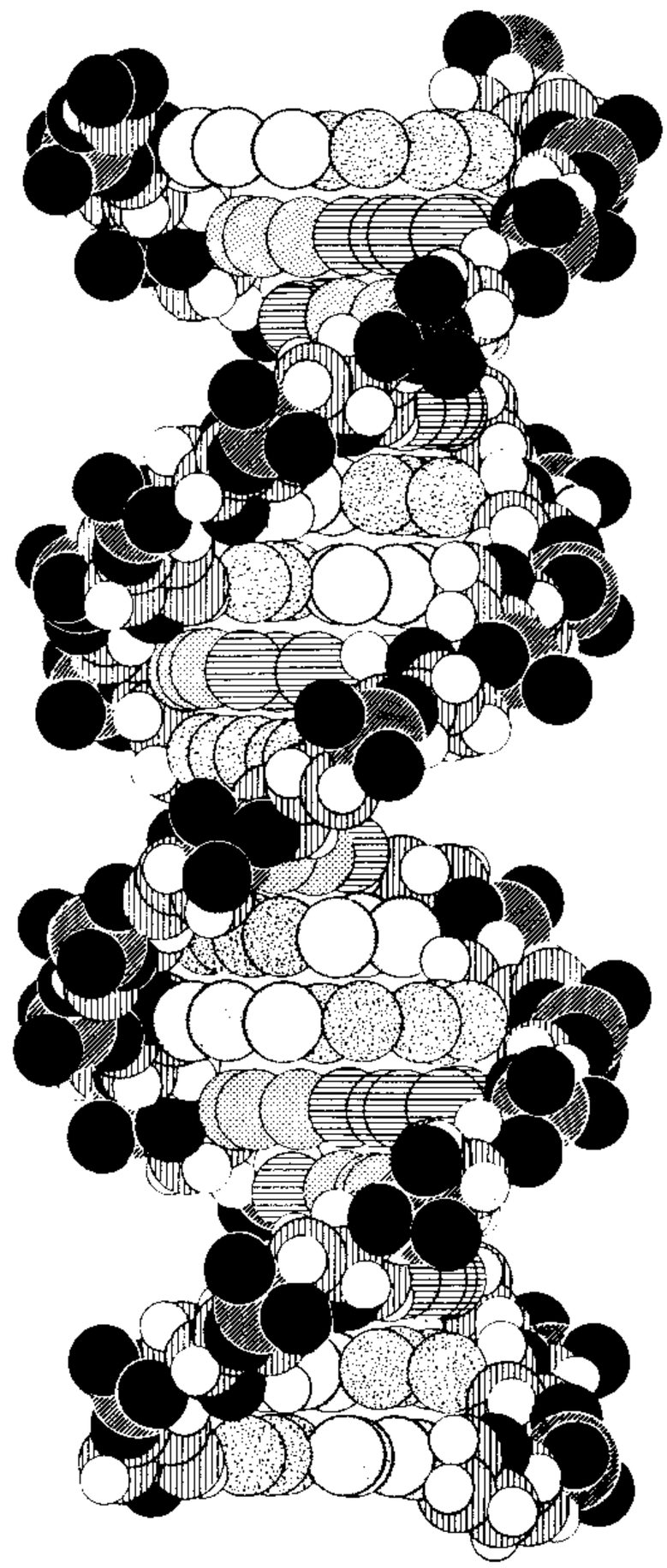

(a)

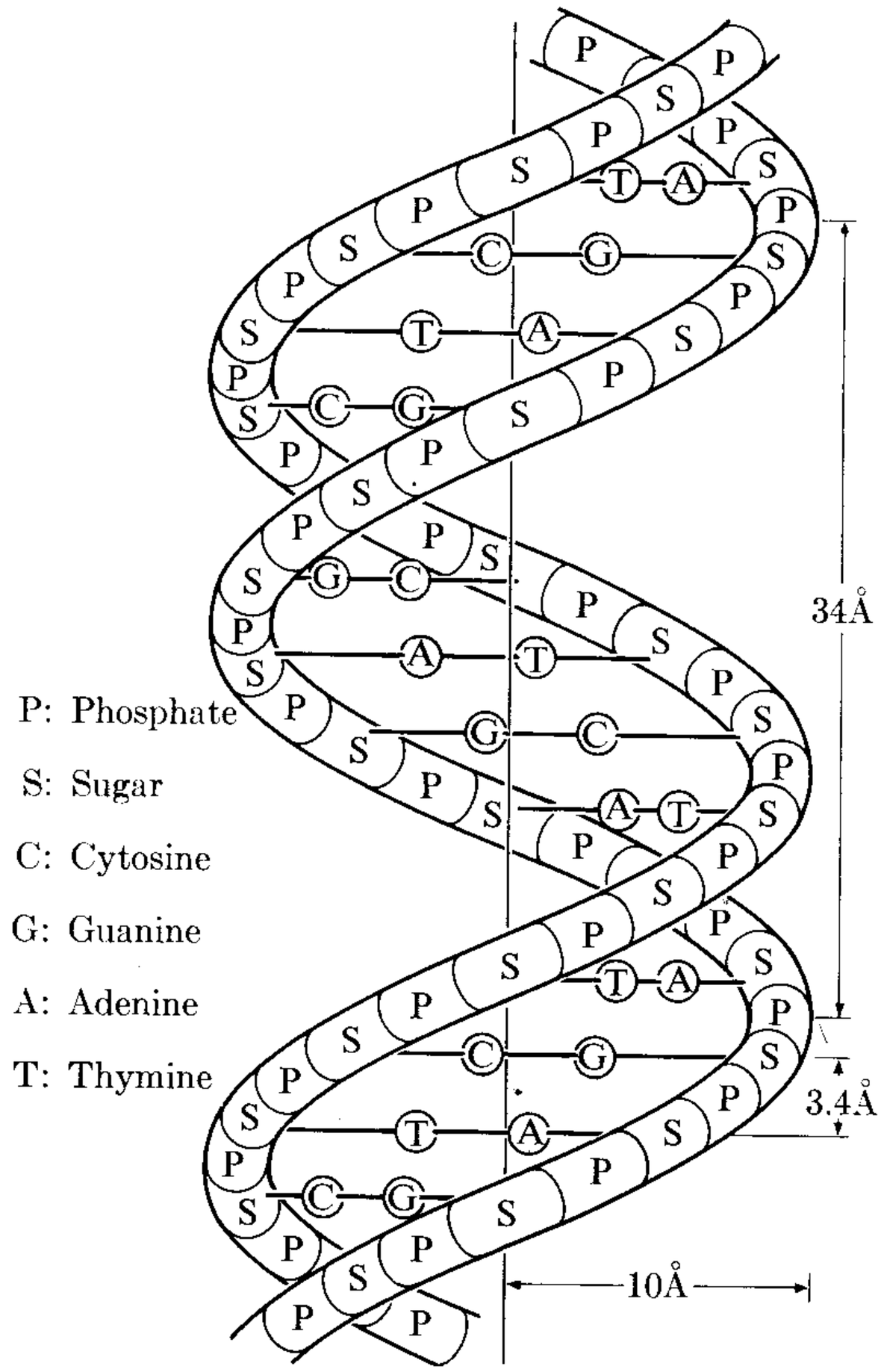

(b)

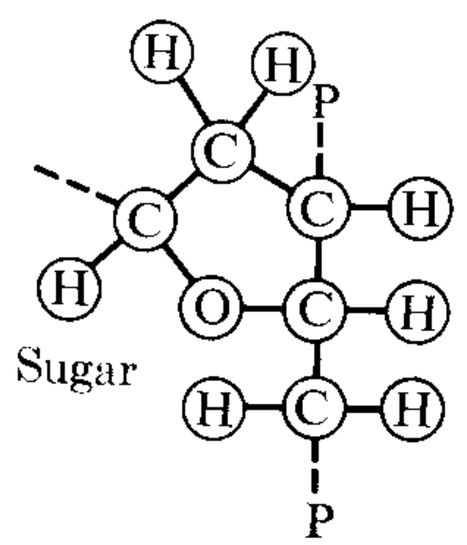

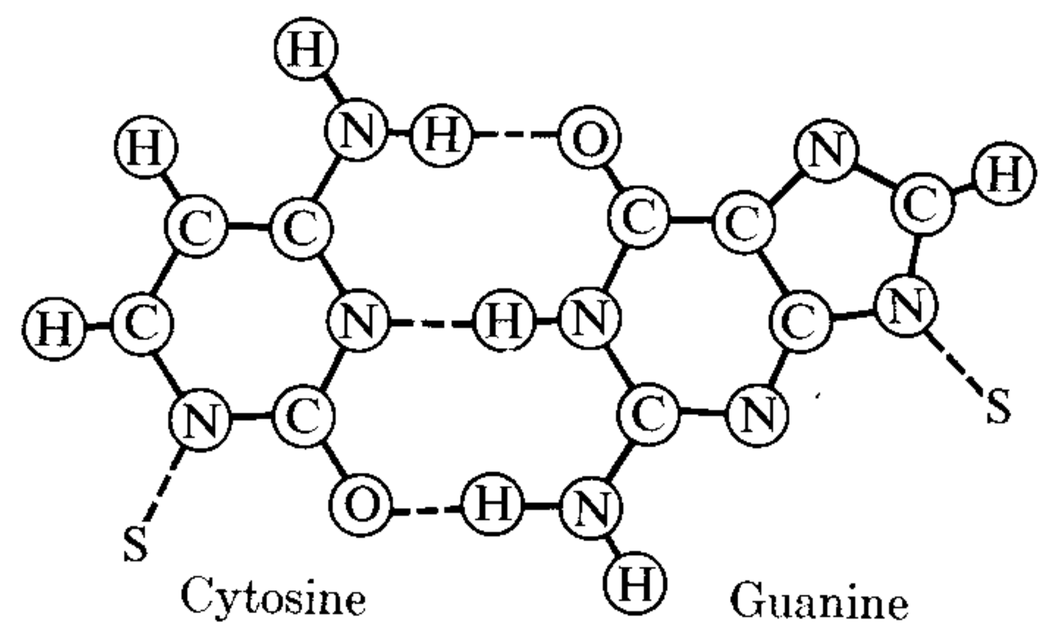

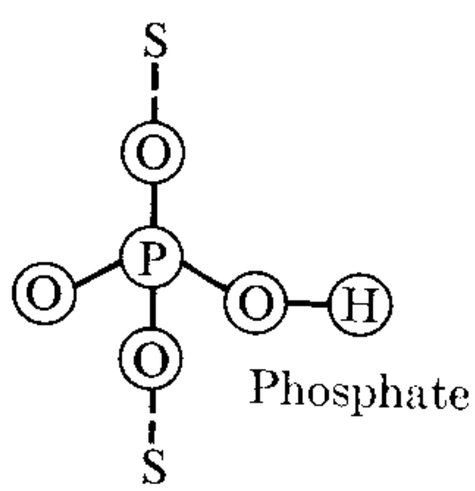

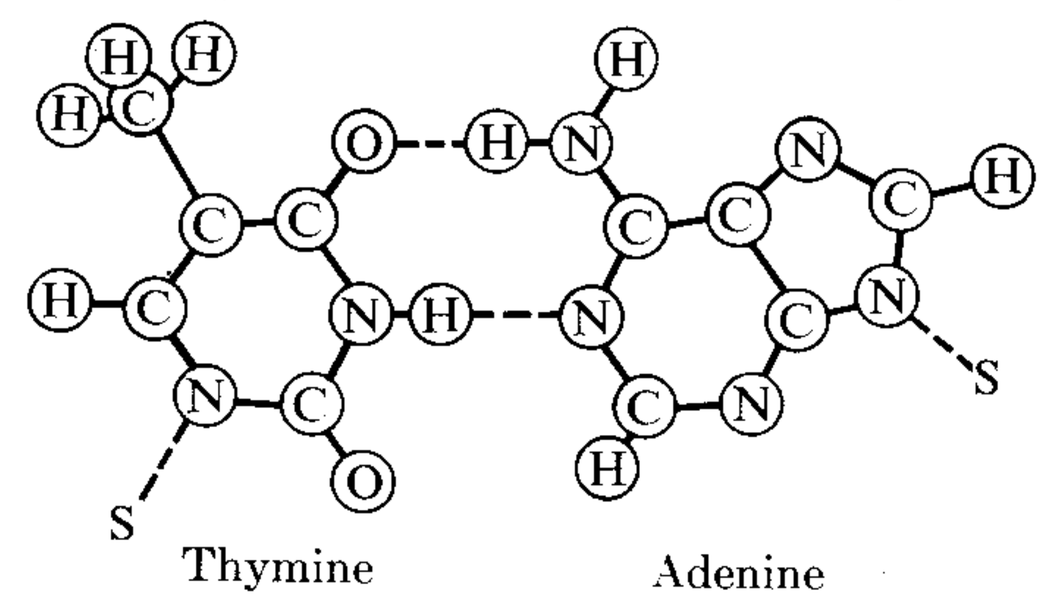

(c)

Figure 1–4

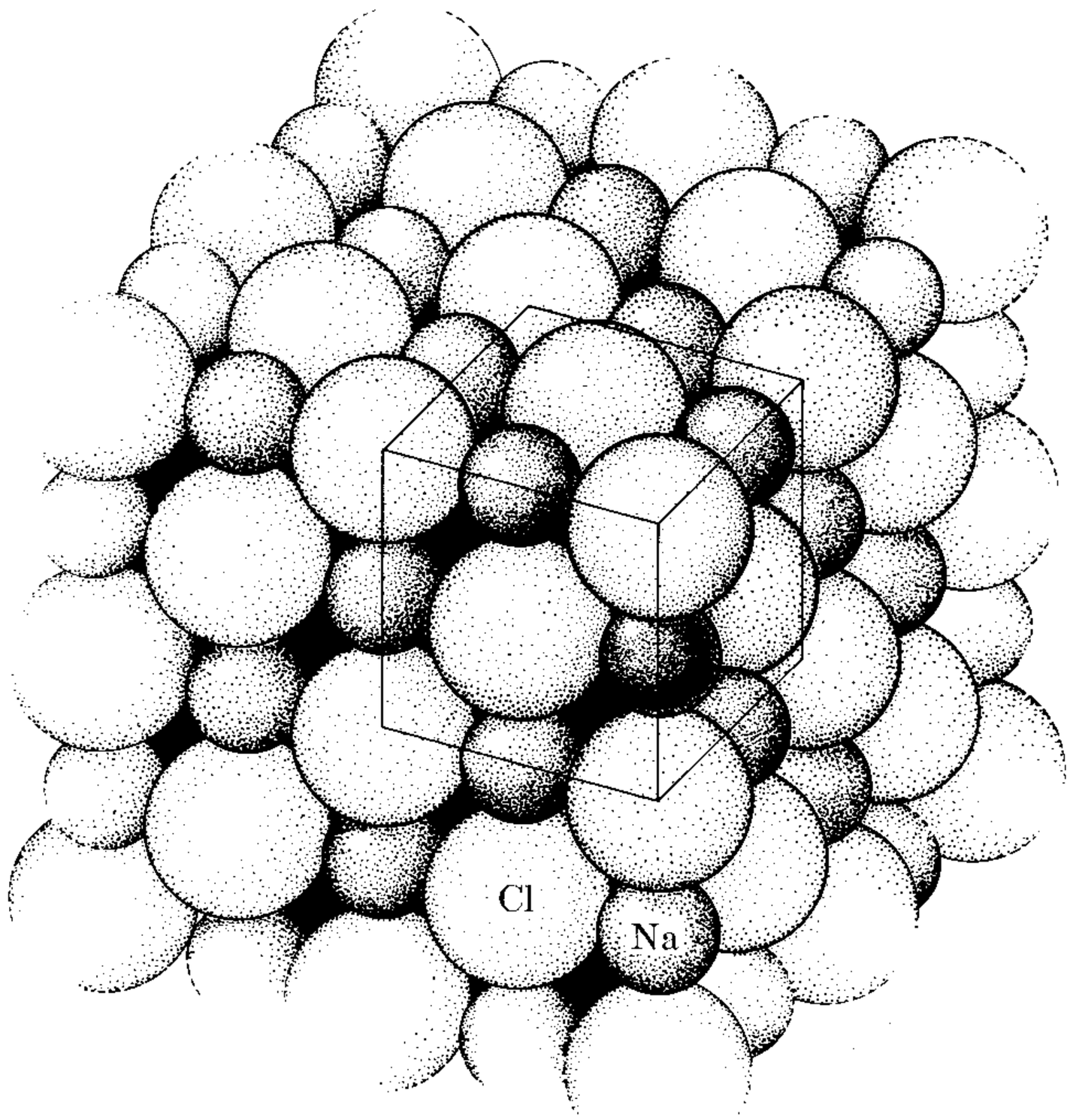

Fig. 1–5. Crystal structure of sodium chloride. The atoms are arranged in a regular geometric form that extends over a relatively large volume. This structure is reflected in the external appearance of the macroscopic crystals.

A particularly important kind of body is the living body or *living matter*, also designated *protoplasm*, in which molecules appear in a highly organized pattern and exhibit properties and functions that are apparently distinct from those of inert matter. The human body, which is the most developed of all living bodies, is composed of about 10^{28} atoms; most of these are carbon, hydrogen, oxygen, and nitrogen atoms.

The solar system is an aggregate of several huge bodies called planets, which rotate about a star, called the sun. One of the planets is our earth, which contains about 10^{51} atoms. The sun is composed of about 10^{57} atoms. The solar system

---

Fig. 1–4. Crick-Watson model of desoxyribonucleic acid (DNA). One of the two nucleic acids involved in the composition of a chromosome, DNA carries genetic information, and is one of the best-studied giant molecules. X-ray diffraction has shown that it consists of two antiparallel helices composed of a sequence of sugar (S) and phosphate (P) groups. The sugar, called desoxyribose, contains five carbon atoms. The two helices are interlocked by pairs of hydrogen-bonded base groups. One pair is formed by two substances called adenine and thymine (A-T) and the other by cytosine and guanine (C-G). The genetic code of the DNA molecule depends on the sequence or ordering of each base pair. These base pairs are like rungs along a helical stepladder, each rung being about 11 angstroms long. The pitch of each helix is about 34 angstroms, and its overall diameter is about 18 angstroms (1 angstrom = 10^{-10} m).

in turn is a small part of a large aggregate of stars which form a galaxy called the Milky Way, composed of about 10^{11} stars or 10^{70} atoms and having a disk shape, with a diameter of about 10^{21} m or about 100,000 light years, and a maximum thickness of about 10^{20} m. Many galaxies similar to ours have been observed (Fig. 1–6), the closest being about two million light years or 2×10^{22} m from us. The universe may contain about 10^{20} stars grouped in about 10^{10} galaxies and containing a total of about 10^{80} atoms in a region whose radius is of the order of 10^{26} m or 10^{10} light years.

Some natural questions come to our mind. Why and how are electrons, protons, and neutrons bound together to form atoms? Why and how are atoms bound together to form molecules? Why and how are molecules bound together to form bodies? How does it happen that matter aggregates itself in size from small dust particles to huge planets, from bacteria to this marvelous creature called man? We may answer these fundamental questions, in principle, by introducing the notion of *interactions*. We say that the particles in an atom interact among themselves in such a way as to produce a stable configuration. Atoms in turn interact to produce molecules, and molecules interact to form bodies. Matter in bulk also exhibits certain obvious interactions, such as gravitation.

This concept of interaction is not new. We are not promulgating a radical new doctrine, or overthrowing long-established concepts. We have merely changed and adapted the wording used to describe the makeup of the universe, as a result of the many years of investigation since 300 B.C., when Aristotle, in his *De Caelo*, said, "They [atoms] move in the void and catching each other up jostle together, and some recoil in any direction that may chance, and others become entangled with one another in varying degrees, according to the symmetry of their shapes and sizes and positions and order, and they remain together; and thus the coming into being of composite things is effected." We may compare Aristotle's wording with that of the Nobel laureate T. D. Lee, who, in 1965, said:* "The purpose of science is to seek for that simple set of fundamental principles through which all known facts are understood and new results predicted. Since all matter is composed of the same fundamental units, the ultimate foundation of all natural sciences must be based on the laws governing the behavior of these elementary particles."

It is the primary objective of the physicist to disclose the various interactions of matter; mainly, these are gravitational, electromagnetic and nuclear interactions. The physicist then tries to express them in a quantitative way, for which mathematics is required. Finally he attempts to formulate general rules about the behavior of matter in bulk—behavior which results from these fundamental interactions. A description of the behavior of matter in bulk is, by necessity, statistical in nature, since it involves a tremendously large number of molecules, whose individual motions are impossible to follow in detail. For example, in a raindrop there may be as many as 10^{20} water molecules.

---

* *Nature of Matter—Purposes of High Energy Physics*, Luke C. L. Yuan, editor. New York: Brookhaven National Laboratory, 1965.

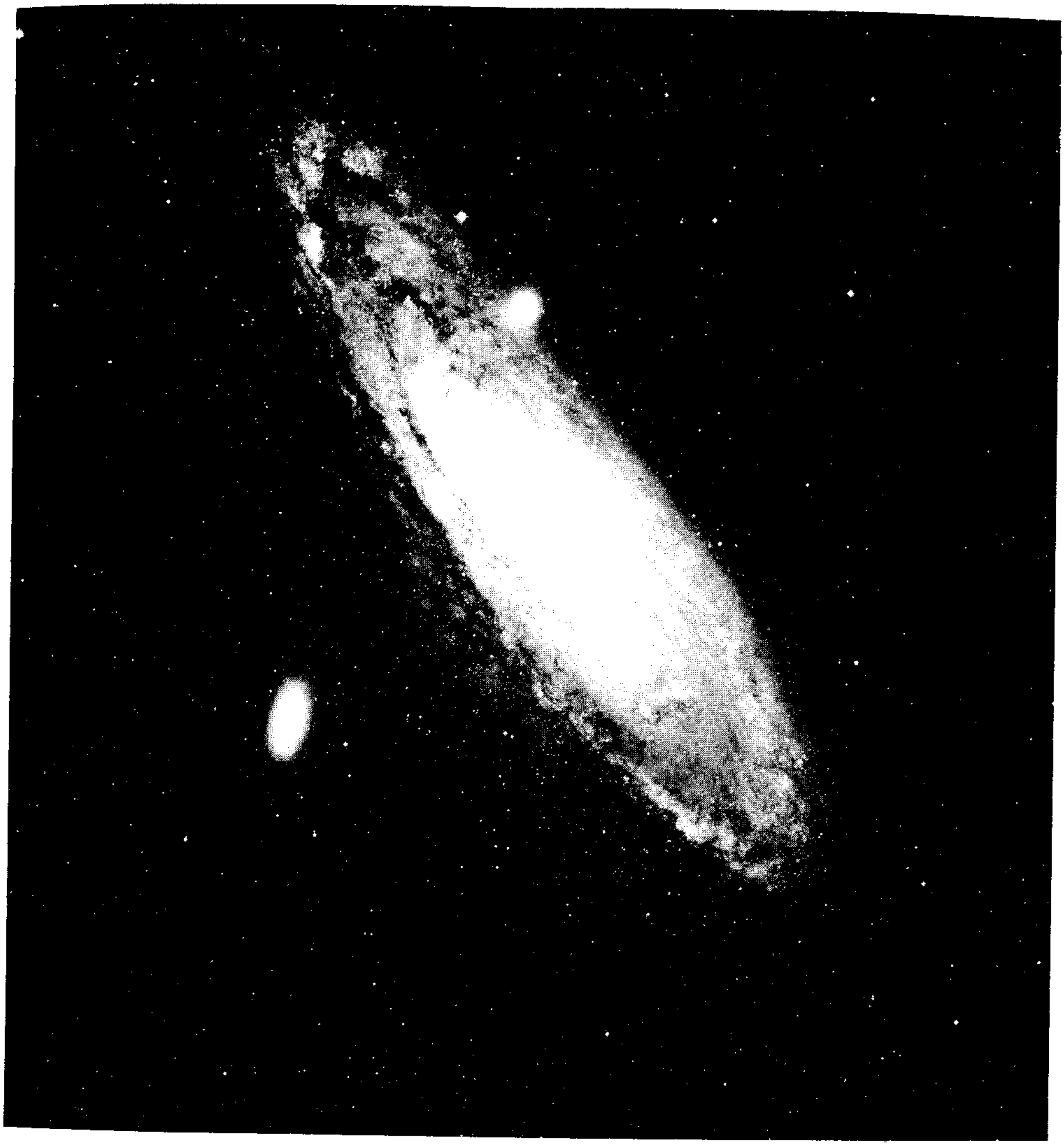

Fig. 1–6. Great Nebula in Andromeda, also called M-31. The nearest of the large regular galaxies, it is still about 2,500,000 light years or 2.5×10^{22} m from the solar system. Its diameter is about 125,000 light years or 10^{21} m, and it contains more than 10^{11} stars. (Photograph courtesy Mount Wilson and Palomar Observatories.)

Physics covers a tremendous range of magnitudes, going from lengths of the order of 10^{-15} m and masses of the order of 10^{-31} kg (corresponding to a single particle such as the electron), up to—and far beyond—lengths of the order of 10^{9} m and masses of the order of 10^{30} kg (corresponding to bodies in our solar system). Although the basic laws are all the same, the way the laws are expressed and the types of approximation made depend on the particular range of magnitudes in which one is working.

1.4 The Relation of Physics to Other Sciences

We indicated in Section 1.1, and we may say again, that the objective of physics is to enable us to understand the basic components of matter and their mutual interactions, and thus to explain natural phenomena, including the properties of matter in bulk. From this statement we can see that physics is the most fundamental of all natural sciences. Chemistry deals basically with one particular aspect of this ambitious program: the application of the laws of physics to the formation of molecules and the different practical means of transforming certain molecules into others. And biology must lean very heavily on physics and chemistry to explain the processes occurring in living bodies. The application of the principles of physics and chemistry to practical problems, in research and development as well as in professional practice, has given rise to the different branches of engineering. Modern engineering practice and research would be impossible without a sound understanding of the fundamental ideas of the natural sciences.

But physics is important not just because it provides the basic conceptual and theoretical framework on which the other natural sciences are founded. From the practical point of view, it is important because it provides techniques which can be used in almost any area of pure or applied research. The astronomer requires optical, spectroscopic, and radio techniques. The geologist uses gravimetric, acoustic, nuclear, and mechanical methods in his research. The same may be said of the oceanographer, the meteorologist, the seismologist, etc. A modern hospital is equipped with laboratories in which the most sophisticated of physical techniques are used. In summary, hardly any activity of research, including such fields as archaeology, paleontology, history, and art, can proceed without the use of modern physical techniques. This gives the physicist the gratifying feeling that he is not only advancing our body of knowledge about nature, but contributing to the social progress of mankind.

1.5 The Experimental Method

In order to fulfill its objective, physics, as well as all natural sciences both pure and applied, depends on *observation* and *experimentation*. Observation consists in a careful and critical examination of a phenomenon by noting and analyzing the different factors and circumstances that appear to influence it. Unfortunately, the conditions under which phenomena occur naturally rarely offer enough variation and flexibility. In some cases they occur only infrequently so that analyzing them is a difficult and slow process. For that reason experimentation is necessary. Experimentation consists in the observation of a phenomenon under prearranged and carefully controlled conditions. Thus the scientist can vary the conditions at his will, making it easier to disclose how they affect the process. Without experimentation modern science would never have achieved the advances it has. This is why laboratories are so essential to the scientist.

To emphasize this point, Fig. 1–7 shows the research reactor of the Oak Ridge National Laboratory. Note that the space surrounding the reactor is crowded with experimental equipment. Some of this equipment may be used by physicists to learn more about nuclear properties or to make a structural analysis of materials.

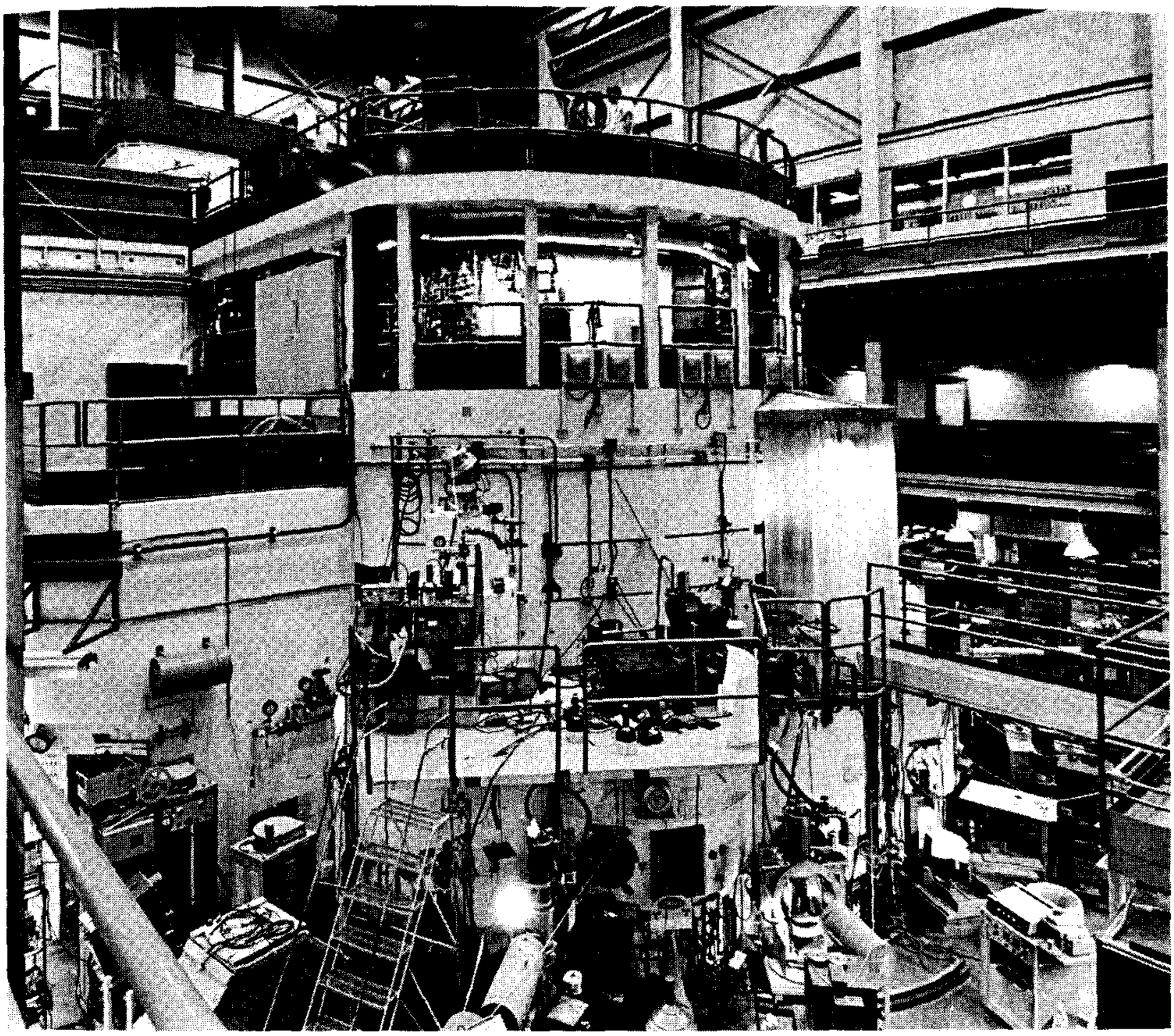

Fig. 1–7. The Oak Ridge National Laboratory research nuclear reactor, which is being used in a great variety of fundamental research. (Photograph courtesy of ORNL.)

Other apparatus may be used to prepare radioactive materials for applications in chemistry, medicine, biology, agriculture, or engineering. A group of biophysicists using some of the above equipment may be experimenting on the effects of radiation on biological specimens, while another group of scientists may be using the same equipment to study effects of radiation on different kinds of material. It is suggested that the student pay a visit to a modern research laboratory so that he may have a more personal feeling for the role of experimentation in science.

Of course, experimentation is not the only tool a physicist has. From the known facts a scientist may infer new knowledge in a *theoretical* way. By theoretical we mean that the physicist proposes a *model* of the physical situation he is studying. Using relations previously established, he applies logical and deductive reasoning to the model. Ordinarily he works out his reasoning by means of mathematical techniques. The end result may be the prediction of some phenomenon not yet observed or the verification of the relations among several processes. The knowledge a physicist acquires by theoretical means is in turn used by other scientists

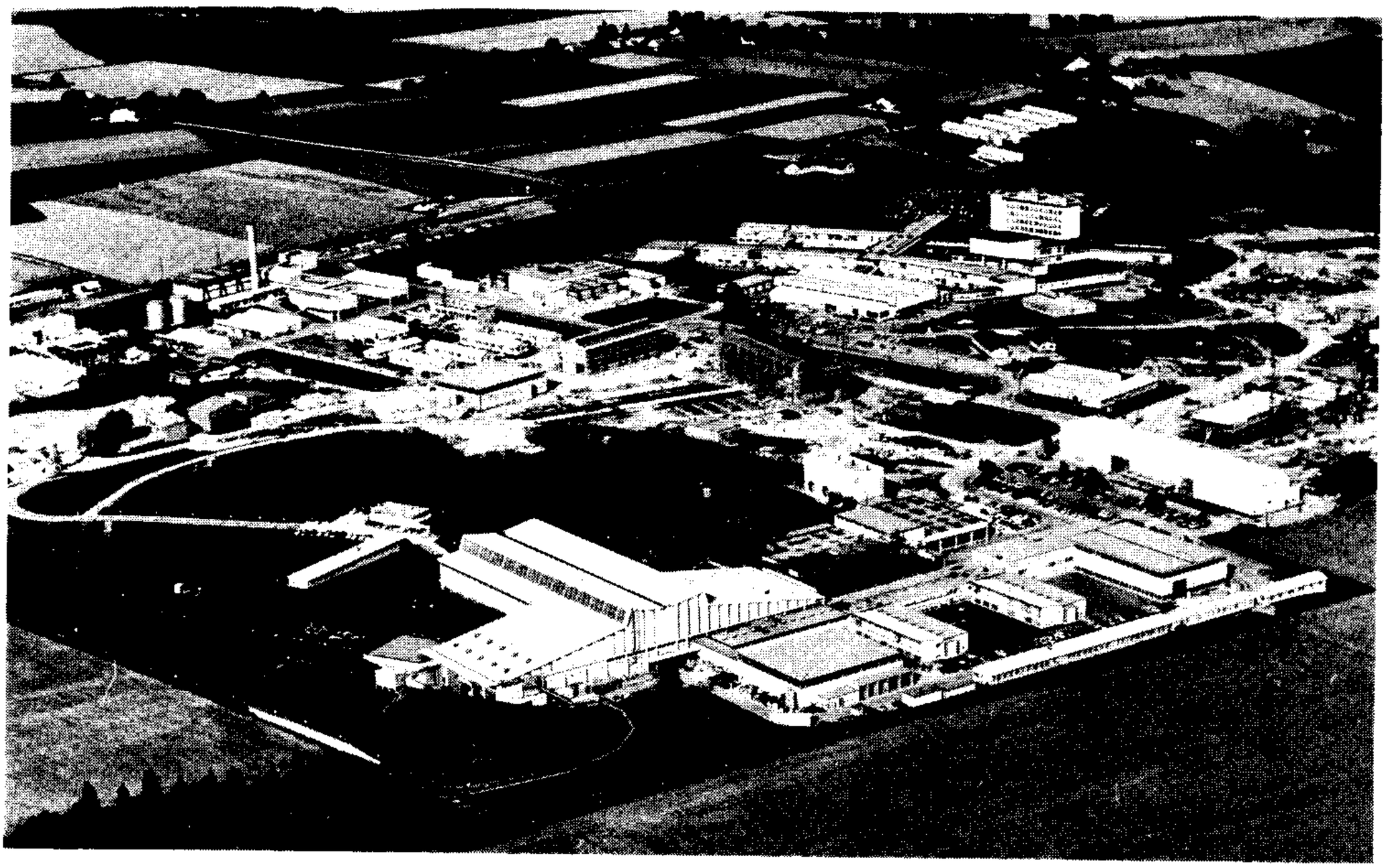

Fig. 1–8. General view of CERN (European Organization for Nuclear Research), founded in 1954. Although it is a cooperative enterprise among European governments (Austria, Belgium, Denmark, Federal Republic of Germany, France, Greece, Italy, Netherlands, Norway, Spain, Sweden, Switzerland, and the United Kingdom), the United States also participates actively. Located at Meyrin, Switzerland, on the Swiss–French border, CERN has the best facilities for nuclear research in Western Europe, such as a 600-Mev synchro-cyclotron, a 28-Gev proton synchrotron (whose magnet lies underground along the circular structure), and a 2-m liquid-hydrogen bubble chamber. CERN's personnel (about 2000) comes from all the member countries, and its annual budget is close to $30,000,000. (Photograph courtesy of CERN.)

to perform new experiments for checking the model itself, or to determine its limitations and failures. The theoretician then revises and modifies his model so that it will agree with the new information. It is this interwoven relation between experimentation and theory that allows science to progress steadily and on solid ground.

Although in the old days a scientist could work in a more or less isolated fashion (and such was the case for Galileo, Newton, Huygens and others), modern science, because of its complexity, is mainly the result of teamwork, in which theoreticians and experimentalists work and think together. And by "together," we do not necessarily imply physical coincidence at the same place. Modern means of communication facilitate rapid exchange of ideas. Physicists several hundred miles apart, and from different nationalities, may work jointly, collaborating on a common research project (Fig. 1–8). This fact applies not only to physics, but to almost any science, and thereby demonstrates the universal value of science, which reaches beyond all kinds of human barriers. It may be hoped that science, through this type of cooperation, will assist in increasing understanding among men.

References

1. "Truth in Physics," P. Schmidt, *Am. J. Phys.* **28,** 24 (1960)
2. "Nature of Physics and Its Relation to Other Sciences," G. P. Thompson, *Am. J. Phys.* **28,** 187 (1960)
3. "'Empty' Space," H. van de Hulst, *Scientific American,* November 1955, page 72
4. "Some Reflections on Science and the Humanities," J. Ashmore, *Physics Today,* November 1963, page 46
5. "American Physics Comes of Age," J. Van Vleck, *Physics Today,* June 1964, page 21
6. "Science and Public Policy," E. Daddario, *Physics Today,* January 1965, page 23
7. "Physics and Biology," W. A. Rosenblith, *Physics Today,* January 1966, page 23
8. *Atoms and the Universe* (second edition), by G. Jones, J. Rotblat, and G. Whitrow. New York: Scribner's, 1963
9. *The Excitement of Science,* by J. R. Platt. Boston: Houghton Mifflin, 1962
10. *The Feynman Lectures on Physics,* Volume I, by R. Feynman, R. Leighton, and M. Sands. Reading, Mass.: Addison-Wesley, 1963, Chapters 1, 2, and 3
11. *Foundations of Modern Physical Science,* by G. Holton and D. H. D. Roller. Reading, Mass.: Addison-Wesley, 1958, Chapters 8, 12, 14, and 15

2
MEASUREMENT AND UNITS

2.1 Introduction
2.2 Measurement
2.3 Fundamental Quantities and Units
2.4 Density
2.5 Plane Angles
2.6 Solid Angles
2.7 Precision and Accuracy
2.8 Measurement in the Laboratory

2.1 Introduction

The observation of a phenomenon is in general incomplete unless it results in *quantitative* information. Obtaining such information requires the *measurement* of a physical property, and thus measurement constitutes a good part of the daily routine of the experimental physicist. Lord Kelvin said that our knowledge is satisfactory only when we can express it in terms of numbers. Although this assertion is perhaps exaggerated, it expresses a philosophy which a physicist must keep in mind at all times in his research. But, as we indicated in Chapter 1, the expression of a physical property in terms of numbers requires not only that we use mathematics to show the relations between the different quantities, but also that we be able to manipulate these relations. This is why mathematics is the language of physics; without mathematics it is impossible to understand physical phenomena, either from a theoretical or experimental viewpoint. Mathematics is the tool of the physicist; it must be manipulated with skill and thoroughness so that its use furthers instead of hinders his work.

In this chapter we shall not only define the units necessary to express the results of a measurement, but also we shall discuss a number of topics (all of which are important) that appear again and again throughout the book. These are density, the plane angle, the solid angle, significant figures, and the process of analyzing experimental data.

2.2 Measurement

Measurement is a technique by means of which we attach a number to a physical property as a result of comparing it with a similar, standard, quantity that has been adopted as a *unit*. Most measurements performed in the laboratory reduce essentially to the measurement of a length. By using this measurement (and certain conventions expressed by formulas), we obtain the desired quantity. When he measures something, the physicist must take great care to produce the minimum possible disturbance of the system that is under observation. For example, when we measure the temperature of a body, we place it in contact with a thermometer. But when we place the two together, some energy or "heat" is exchanged between the body and the thermometer, resulting in a slight change in the temperature of the body, thus affecting the very quantity we wanted to measure. In addition, all measurements are affected by some degree of *experimental error* because of the inevitable imperfections in the measuring device, or the limitations imposed by our senses (vision and hearing) which must record the information. Therefore, a physicist designs his measuring technique so that the disturbance of the quantity measured is smaller than his experimental error. In general, this is always possible when we are measuring quantities in the macroscopic range (i.e., in bodies composed of a large number of molecules), because then all we have to do is to use a measuring device that produces a disturbance smaller, by several orders of magnitude, than the quantity measured. Thus whatever the disturbance produced, it is negligible compared with the experimental error. In

other cases the amount of disturbance can be estimated and the measured value corrected.

The situation, however, is quite different when we are measuring individual atomic properties, such as the motion of an electron. Now we do not have the option of using a measuring device that produces an interaction smaller than the quantity to be measured, because we do not have a device that small. The disturbance introduced is of the same order of magnitude as the quantity to be measured and it may not be possible even to estimate or account for it. Therefore a distinction must be made between the measurement of macroscopic quantities and of atomic quantities. We shall require a special theoretical structure when we deal with atomic quantities. The technique will not be discussed at this time; it is called *quantum mechanics.*

Another important requirement is that the definitions of physical quantities must be *operational,* in the sense that they must indicate explicitly or implicitly how to measure the quantity that is defined. For example, to say that velocity is an expression of the rate at which a body moves is not an operational definition of velocity, but to say that *velocity is the distance moved divided by the time* is an operational definition of velocity.

2.3 Fundamental Quantities and Units

Before we measure something, we must first select a unit for each quantity to be measured. For purposes of measurement, there are fundamental and derived quantities and units. The physicist recognizes four fundamental independent quantities: *length, mass, time,* and *charge.**

Length is a primary concept and is a notion we all acquire naturally; it is useless to attempt to give a definition of it. So is time. Mass and charge, however, are not that intuitive. The concept of mass will be analyzed in detail in Chapters 7 and 13. Let us say here only that mass is a coefficient, characteristic of each particle, that determines the particle's behavior when it interacts with other particles as well as the strength of its gravitational interactions.

Similarly, charge, which will be discussed in detail in Chapter 14, is another coefficient, characteristic of each particle, that determines the strength of its electromagnetic interaction with other particles. There may exist other coefficients characterizing other interactions between particles, but so far they have not been identified, and no additional fundamental quantities seem to be required at present.

Mass can also be defined operationally using the principle of the equal arm balance (Fig. 2–1); that is, a symmetric balance supported at its center O. Two bodies C and C' are said to have equal masses when, with one mass placed on each pan, the balance remains in equilibrium. Experimentally it is verified that if the balance is in equilibrium at one place on the earth, it remains in equilibrium when

* By this we do not mean that there are no other "fundamental" quantities in physics; however, the other quantities are such that they can be expressed as some combination of these four, or else they do not require a special unit for their expression.

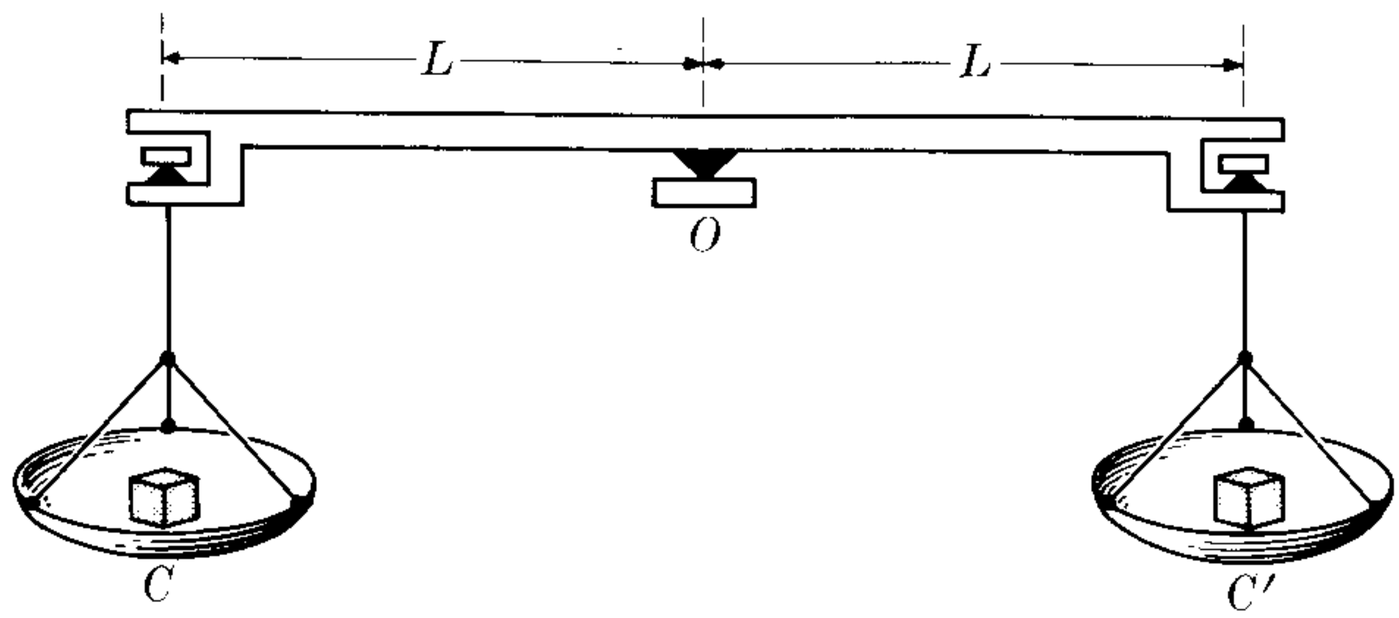

Fig. 2–1. Equal arm balance for comparing the masses of two bodies.

placed anywhere else. Therefore, the equality of mass is a property of the bodies, independent of the place where they are compared. If C' is composed of standard units, the mass of C can be obtained as a multiple of the standard mass. The mass obtained this way is really the gravitational mass (Chapter 13). But in Chapter 7 we shall see a means for comparing masses dynamically. Mass obtained dynamically is called *inertial mass*. No difference has been found between the two methods of measuring mass, as will be discussed in Chapter 13.

With a few exceptions, all other quantities used thus far in physics can be related to these four quantities by their definitions, expressed as mathematical relations involving length, mass, time, and charge. The units of all these derived quantities are in turn expressed in terms of the units of the four fundamental quantities by means of these defining relations. Therefore it is only necessary to agree on the units for the four fundamental quantities in order to have a consistent system of units. Physicists have agreed (at the Eleventh General Conference on Weights and Measures, held in Paris in 1960) to use the MKSC system of units, and this is what we shall adhere to in this book. The initials stand for *meter*, *kilogram*, *second*, and *coulomb*. Their definitions are as follows:

Meter, abbreviated m, is the unit of length. It is equal to 1,650,763.73 wavelengths of the electromagnetic radiation emitted by the isotope ^{86}Kr in its transition between states $2p_{10}$ and $5d_5$. Those two symbols refer to particular physical states of the krypton atom. The radiation emitted can easily be identified because it appears as a red line on a spectrogram.

Kilogram, abbreviated kg, is the unit of mass. It is defined as the mass of the *international kilogram*, a platinum block kept at the International Bureau of Weights and Measures in Sèvres, near Paris. For all practical purposes it is equal to the mass of 10^{-3} m^3 of distilled water at 4°C. The mass of 1 m^3 of water is thus 10^3 kg. A volume of 10^{-3} m^3 is called one *liter*. By analogy with the meter, we could associate the kilogram with an atomic property by saying that it is equal to the mass of 5.0188×10^{25} atoms of the isotope ^{12}C. In fact, this is the criterion adopted in defining the international scale of atomic masses.

Second, abbreviated s, is the unit of time. It is defined according to the International Astronomical Union as 1/31,556,925.975 of the duration of the tropical year 1900. The tropical year is defined as the time interval between two successive passages of the earth through the vernal equinox, which takes place approximately

on March 21st each year (Fig. 2–2). It may also be defined as 1/86,400 of the mean solar day, which is the time interval between two successive passages of a point on the earth in front of the sun, averaged over one year. But this definition has the drawback that, because of tidal action, the period of the earth's rotation is decreasing gradually, and therefore this unit should also be changing gradually. For that reason a particular year, 1900, was arbitrarily chosen.

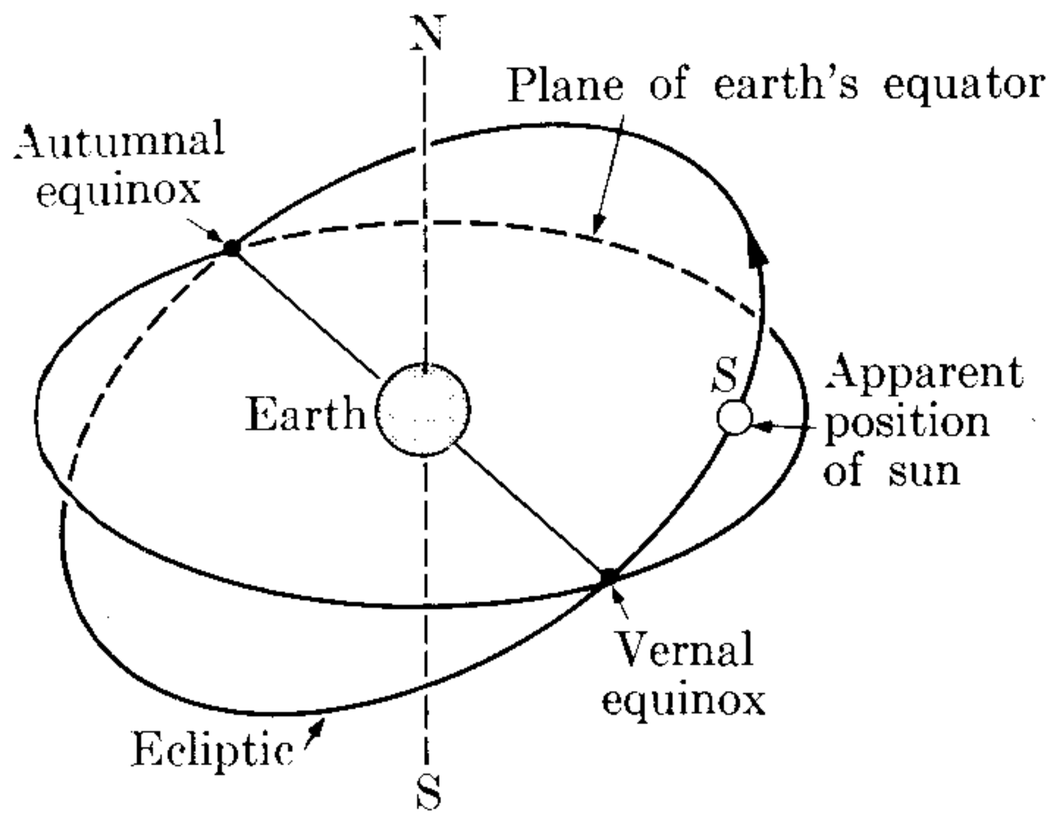

Fig. 2–2. Definition of the tropical year.

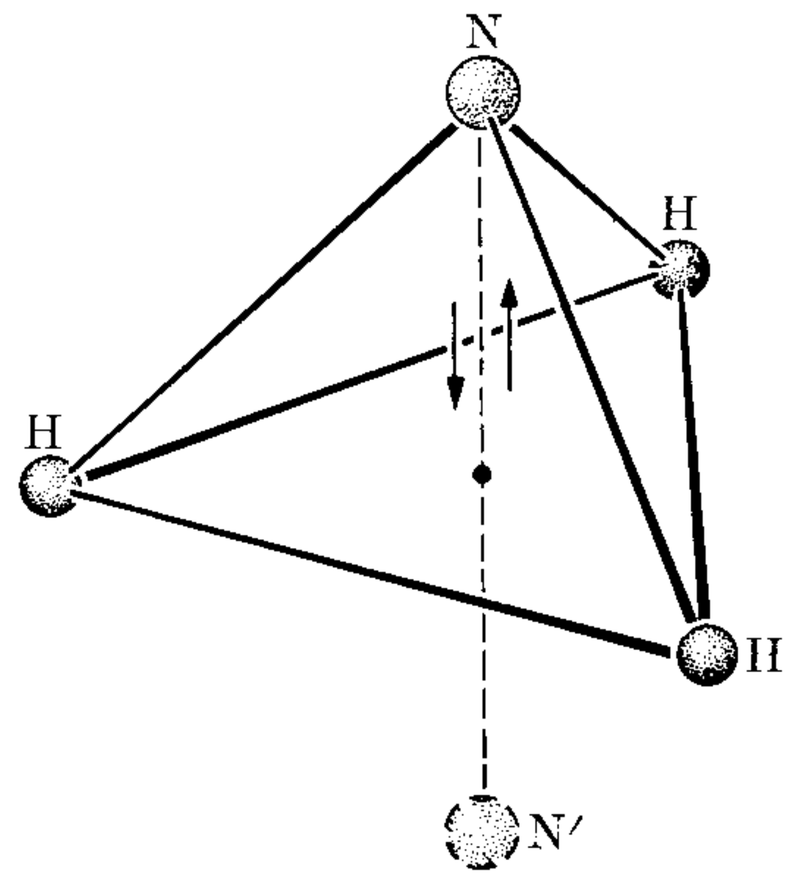

Fig. 2–3. Oscillation of the nitrogen atom between two symmetric positions in the ammonia molecule.

The unit of time could also be related to an atomic property, as has been done with the unit of length, resulting in what are called *atomic clocks*. For example, the molecule of ammonia (NH_3) has a pyramidal structure, with the three H atoms in the base and the N atom at the vertex (Fig. 2–3). But obviously there is a symmetric position, N′, for the nitrogen atom at the same distance from the H-H-H plane but on the opposite side. The N atom may oscillate between these two positions of equilibrium with a fixed period. The second may then be defined as the time required for the N atom to make 2.387×10^{10} such oscillations. The first atomic clock, based on this principle, was built at the National Bureau of Standards in 1948. Since then other substances have been tried as atomic clocks. However, no international agreement has yet been reached for an atomic standard of time, although it seems that there is a general consensus toward the adoption of such a definition of the unit of time.*

Coulomb, abbreviated C, is the unit of electric charge. Its precise and official definition will be given in Chapter 14, but at this moment we may say that it is equal in absolute value to the negative charge contained in 6.2418×10^{18} electrons, or to the positive charge in an equal number of protons.

---

* In October 1964, the International Committee on Weights and Measures temporarily based the international time interval on a particular atomic transition of the ^{133}Cs atom. The second is thus *temporarily* defined as the time required for the oscillator which forces cesium atoms to perform the stated transition to oscillate 9,192,631,770 times.

Note: Strictly speaking, in addition to the meter, the kilogram, and the second, the fourth unit adopted at the Eleventh Conference was the *ampere* (instead of the coulomb) as a unit of electric current. The coulomb is thus defined as the amount of electric charge that passes through a section of a conductor during one second when the current is one ampere. The reason for choosing the ampere is that a current is more easily established as a standard. Our decision to use the coulomb is based mainly on our wish to express the more fundamental character of electric charge, without departing essentially from the recommendations of the Eleventh Conference. The MKSA is the International System of units, designated by the symbol SI.

The meter and the kilogram are units originally introduced during the French revolution, when the French government decided to establish a rational system of units, known since then as the *metric system*, to supplant the chaotic and varied units in use at that time. The meter was at first defined as "the ten-millionth (10^{-7}) part of a quadrant of a terrestrial meridian." For that purpose an arc of a meridian was carefully measured—an operation that took several years—and a standard platinum bar measuring one meter was fabricated and kept under controlled conditions at 0°C at the International Bureau of Weights and Measures, at Sèvres. Later measurements indicated that the standard bar was shorter by 1.8×10^{-4} m than the ten-millionth part of the quadrant of a meridian, and it was decided to adopt the length of the bar as the standard meter without further reference to the earth meridian. Duplicates of the standard meter exist in many countries. However, the convenience of having a standard of more permanent character and easy availability at any laboratory was recognized. For that reason the red line of ^{86}Kr was chosen.

For mass, the unit chosen by the French was the *gram*, abbreviated g, defined as the mass of one cubic centimeter (1 cm = 10^{-2} m = 0.3937 in. and 1 cm^3 = 10^{-6} m^3) of distilled water at 4°C. This temperature was chosen because it is the temperature at which the density of water is a maximum. The kilogram is then equal to 10^3 grams. A platinum block, having a mass of one kilogram, was built. Later on it was decided to adopt this block as the standard kilogram without further reference to the water.

Before the MKSC system was adopted, another system was very popular in scientific work: the *cgs system*, in which the unit of length is the centimeter, the unit of mass is the gram, and the unit of time is the second. No definite unit of charge had been assigned to this system, although two were used: the statcoulomb and the abcoulomb, equal respectively to $\frac{1}{3} \times 10^{-9}$ C and 10 C. The cgs system is gradually being replaced in scientific and practical work by the MKSC system.

In many English-speaking countries another system of units is widely used in practical and engineering applications. The unit of length is the *foot*, abbreviated ft, the unit of mass is the *pound*, abbreviated lb, and the unit of time is again the *second*. The equivalent metric units are:

1 foot = 0.3048 m	1 m = 3.281 ft
1 pound = 0.4536 kg	1 kg = 2.205 lb

TABLE 2–1 Prefixes for Powers of Ten

Magnitude	Prefix	Symbol
10^{-18}	atto-	a
10^{-15}	femto-	f
10^{-12}	pico-	p
10^{-9}	nano-	n
10^{-6}	micro-	μ
10^{-3}	milli-	m
10^{-2}	centi-	c
10^{-1}	deci-	d
$10^{0} = 1$	Fundamental unit	
10	deca-	D
10^{2}	hecto-	H
10^{3}	kilo-	k (or K)
10^{6}	mega-	M
10^{9}	giga-	G
10^{12}	tera-	T

It is expected that eventually only the MKSC system will be used throughout the world for scientific, engineering, and household measurements.

For practical reasons multiples and submultiples of the fundamental and derived units have been introduced as powers of ten. They are designated with a prefix, according to the scheme given in Table 2–1.

2.4 Density

The density of a body is defined as its mass per unit volume. So a body having a mass m and a volume V has a density of

$$\rho = \frac{m}{V}. \tag{2.1}$$

Density is expressed in kg m^{-3}. Obviously the density of water is

$$\rho = 10^3 \text{ kg m}^{-3} \qquad (\text{or } 1 \text{ g cm}^{-3} \text{ and } 62.4 \text{ lb ft}^{-3}).$$

Density, as defined in Eq. (2.1), is applicable only to homogeneous bodies; i.e., bodies having the same composition or structure throughout their volume. Otherwise, it gives the *average* density of the body. For a heterogeneous body, the density varies from one place to another. To obtain the density at a particular place, the mass dm, contained in a small (or infinitesimal) volume dV located around the point, is measured. Then one applies Eq. (2.1), which now becomes

$$\rho = \frac{dm}{dV}. \tag{2.2}$$

TABLE 2–2 Densities (Relative to Water)

Solids		Liquids		Gases	
Iron	7.86	Water (4°C)	1.000	Air	1.2922×10^{-3}
Ice	0.917	Mercury	13.59	Hydrogen	8.988×10^{-5}
Magnesium	1.74	Ethyl alcohol	0.791	Oxygen	1.42904×10^{-3}
Aluminum	2.70	Gasoline	0.67	Nitrogen	1.25055×10^{-3}
Uranium	18.7	Air (−147°C)	0.92	Helium	1.7847×10^{-4}

Since density is a statistical concept, the volume dV, to have any physical meaning, must be of such a size as to contain a large number of molecules.

Another useful concept is *relative density*. If ρ_1 and ρ_2 are the densities of two different substances, their relative density is

$$\rho_{21} = \frac{\rho_2}{\rho_1}. \tag{2.3}$$

It is not expressed in any unit because it is a relative quantity; i.e., the quotient of two quantities of the same kind. It is customary to express relative densities with respect to water as a reference. In Table 2–2 we give the densities of several substances relative to water. The numerical values are given at standard temperature and pressure (STP: 0°C and 1 atm), unless otherwise noted.

2.5 Plane Angles

There are two systems for measuring plane angles: *degrees* and *radians*. It is the second that is more important in physics. The circumference of a circle is arbitrarily divided into 360 degrees (°). A right angle, for example, corresponds to 90°. Each degree is divided into 60 minutes (′) and each minute into 60 seconds (″). The measure of an arbitrary angle is expressed in degrees, minutes, and seconds, such as 23°42′34″.

To express a plane angle in radians, one draws, with an arbitrary radius R (Fig. 2–4), the arc AB with center at the vertex O of the angle. Then the measure of θ in radians (abbreviated rad) is

$$\theta = \frac{l}{R}, \tag{2.4}$$

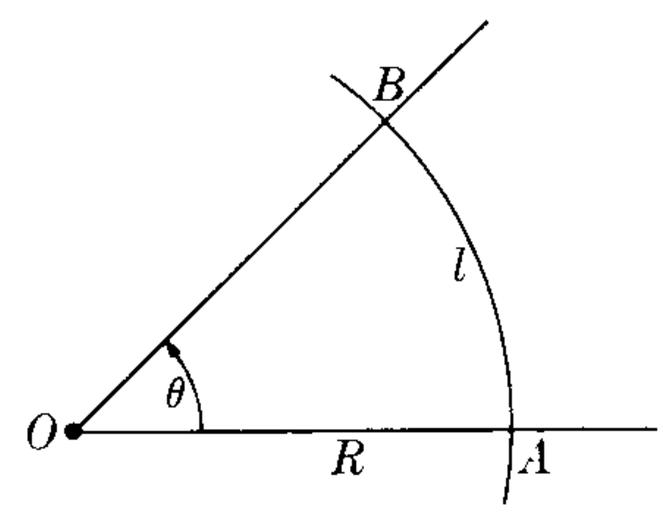

Figure 2–4

where l is the length of the arc AB. This method is based on the fact that, for a given angle, the ratio l/R is constant and independent of the radius, and is thus the measure of the angle expressed in radians. Note that l and R must be expressed in the same units of length. From Eq. (2.4), we have

$$l = R\theta. \tag{2.5}$$

Noting that the circumference of a circle is $2\pi R$, we see that a complete plane angle around a point, measured in radians, is $2\pi R/R = 2\pi$ rad. So 2π rad are equivalent to 360°, and

$$1° = \frac{\pi}{180}\,\text{rad} = 0.017453\,\text{rad}, \qquad 1\,\text{rad} = \frac{180°}{\pi} = 57°17'44.9''.$$

2.6 Solid Angles

A *solid angle* is the space included inside a conical (or pyramidal) surface, as in Fig. 2–5. Its value, expressed in *steradians* (abbreviated sterad), is obtained by drawing, with arbitrary radius R and center at the vertex O, a spherical surface and applying the relation

$$\Omega = \frac{S}{R^2}, \tag{2.6}$$

where S is the area of the spherical cap intercepted by the solid angle. Since the surface area of a sphere is $4\pi R^2$, we conclude that the complete solid angle around a point is 4π steradians. The solid angle formed by the three mutually perpendicular coordinate axes OX, OY, and OZ (Fig. 2–6), is $\frac{1}{8}(4\pi)$ or $\pi/2$ steradians.

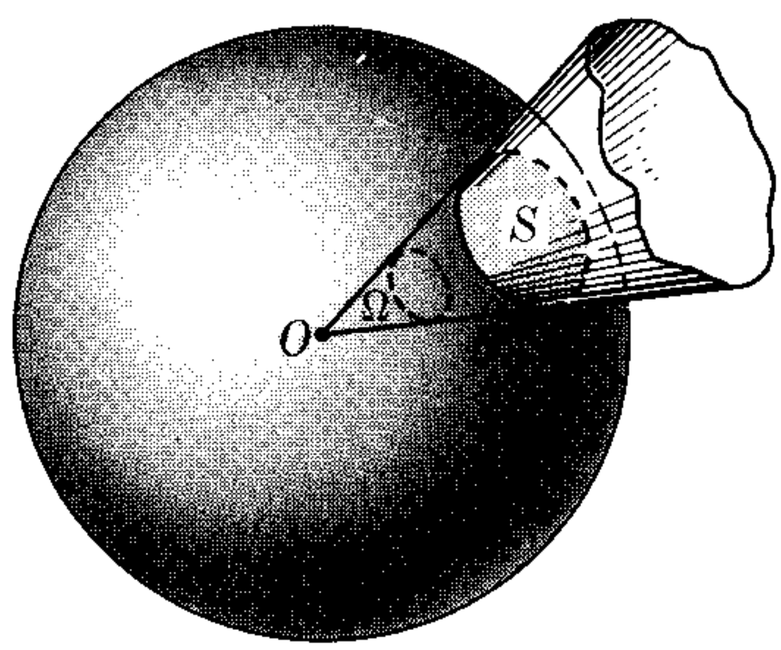

Fig. 2–5. Solid angle.

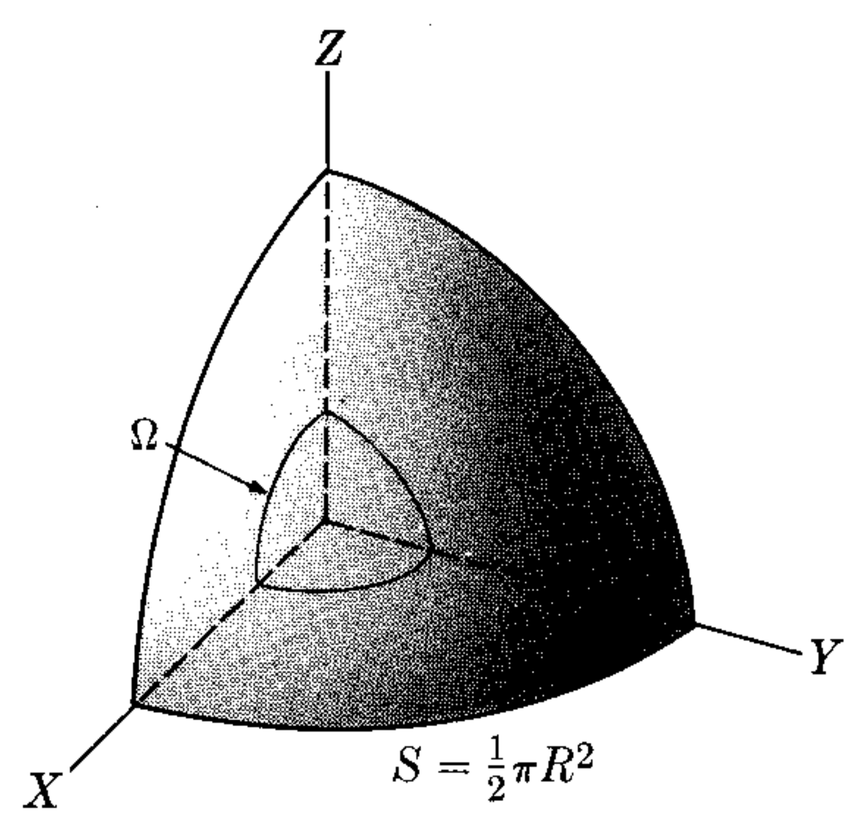

Figure 2–6

When the solid angle is small (Fig. 2–7), the surface area S becomes dS, and is not necessarily a spherical cap, but may be a small plane surface perpendicular to OP so that

$$d\Omega = \frac{dS}{R^2}. \tag{2.7}$$

In some instances the surface dS is not perpendicular to OP, but its normal N makes an angle θ with OP (Fig. 2–8). Then it is necessary to project dS on a plane perpendicular to OP, which gives us the area $dS' = dS \cos\theta$. Thus

$$d\Omega = \frac{dS\cos\theta}{R^2}, \tag{2.8}$$

an expression that will be very useful in future discussions.

2.7 Precision and Accuracy

The word precision usually has a connotation of accuracy. In the world of measurement, however, precision has the connotation of inaccuracy. What we mean is that when a physical property is described by some numerical quantity and some units, the numerical quantity is dependent on a number of different factors, including the particular piece of apparatus used to make the measurement, the type and number of measurements made, and the method employed by the experimenter to extract the number from the apparatus. Unless the numerical quantity is accompanied by another which describes the precision of the measurement, the number quoted is as good as useless. A number may be extremely accurate (that is, be exactly correct), but not be precise because the person quoting the number has failed to state at least something about his method of measurement.

Let us consider a few examples in order to clarify these ideas. If one sees a basket containing seven apples, the statement "I count seven apples in the basket" is a straightforward quote of a numerical quantity. It is precise and accurate, since the number of units to be counted is small and integral. If there are two people, one *slowly* putting apples into the basket and another *slowly* removing them, then one can make accurate and precise statements about the number of apples at any given time.

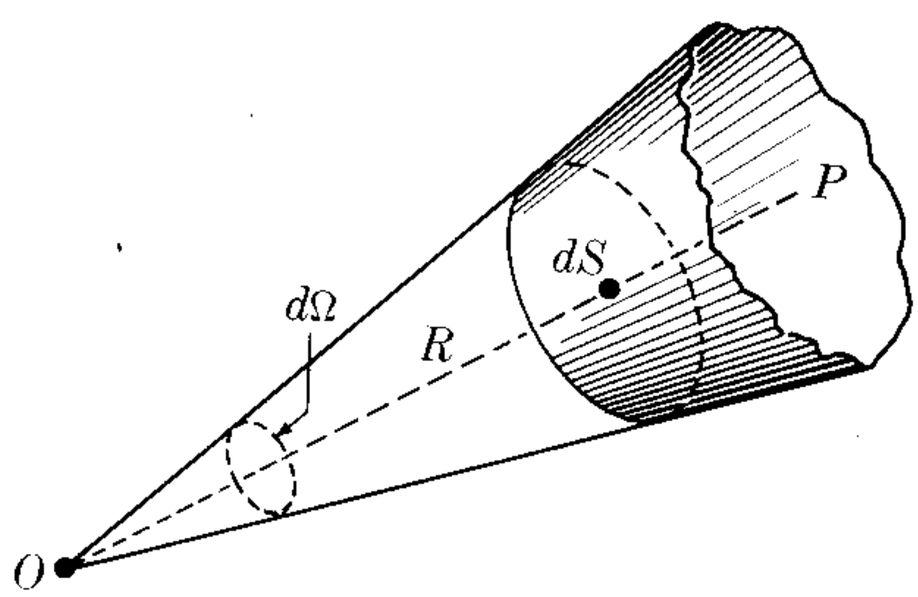

Figure 2–7

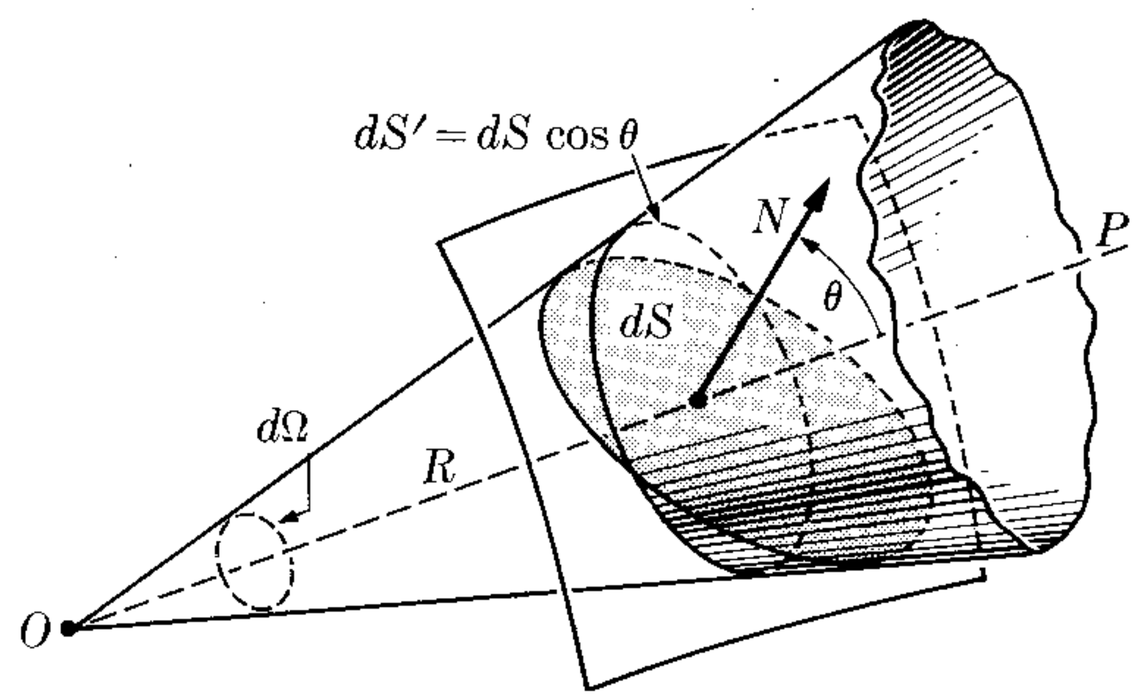

Figure 2–8

Now let us complicate the discussion. Consider the number of people in a small village. Here the number is larger, but still fairly reasonable and definitely integral. An observer standing in the center of the village's one street, by observing the coming and going of people after a census count, could make accurate statements about the number of people in the village. But his numerical quantity would not necessarily be precise, since it would be difficult for him to discover the exact time of the birth and death of the townspeople. Make the village a city or a county, and the job becomes even more difficult.

Let us now ask: Why do we need an accurate counting of the number of the inhabitants of a county? In order to provide different services for all the inhabitants, it is really not necessary to know, at each moment of time, the exact number of them. Rather do we need an accurate accounting whose precision depends on the particular service in question. For instance, to determine the number of new schools to be built in an area we must have a different kind of numerical precision

for the population than would be necessary if we had to determine the number of fire departments needed. If we state the county's population with a precision of 1%, we mean that the number quoted may be 1% greater or 1% less than the actual population, *but we do not know which*, nor does it matter in many cases. In a village of 200 people, a precision of 1% means that we know the population within 2 people. In a county of 100,000 people, the precision is within 1000 people. If we know the population of the United States with a precision of 1%, our population figure may be off by as much as one and a half million, *but we do not know exactly*. Obviously, under some conditions, a precision of greater than 1% is necessary; under others, less precision may suffice.

Up to this point we have been concerned with the operation of counting itself. The assumption is that, given enough information and an ability to process the information rapidly, we could find out the exact population. Whether it is necessary to know this precisely or not has already been discussed. Now we must realize that there are operations which do *not* give us a number of units. For instance, it is true that at a particular point in a room there is an exact value of the temperature. Its value, however, depends on a definition, since temperature is a human conception. Nevertheless, we do not measure temperature itself by a counting method; rather, we measure the length of a column of mercury, a column whose length *represents* the temperature. For various reasons the measured length of the column will not be recorded identically every time it is read, even if the temperature remains constant. One of the major reasons for the variations in the readings is the finite space between divisions on the scale. A meter stick ordinarily has a distance of 1 mm between its divisions. Therefore, if a meter stick is read to the nearest division, the reading *at each end* may be in error by as much as $\frac{1}{2}$ mm. There are other types of reading errors that are taken up in specialized books on the topic. (See the references at the end of the chapter for a few selected texts and articles on measurement.)

The precision, or uncertainty, of a number allows us to define the number of *significant figures* associated with the quantity. For example, if a measurement is quoted as 642.54389 ± 1%, this means that the uncertainty is around 6.4. Therefore we are justified in retaining only those figures in the number that are truly significant. In this case the number should be quoted as 642 ± 1% or 642 ± 6. When the student sees a physical property (such as the velocity of light or Avogadro's number) quoted in this text, the number will be quoted to the first five significant figures, even though the number may be known more precisely; the precision will not be specified. If the student wishes to use these numbers in the calculation of an uncertainty, he may consider the least significant number quoted to be precise to ±1.

When one performs a series of mathematical operations using numbers that have a stated precision, the simplest procedure is to perform the operations, one at a time, disregarding the significant-figure problem until the conclusion of the multiplication, or whatever. Then the resultant number should be reduced to a number having the same number of significant figures (i.e., the same precision) as the least accurate of the numbers.

2.8 Measurement in the Laboratory

With a relatively simple example, the period of a pendulum, we shall describe the methods used in obtaining the numerical quantity associated with a physical property. The *period* of a pendulum is the time between two consecutive passes of the bob through the same point, moving in the same direction. A particular pendulum was set to swing, and its period for a single oscillation was measured fifty separate times. Table 2–3 contains the fifty measurements, in seconds.

From the table you may see that there is no one particular period for the pendulum. What we must do is to take these fifty measurements of the period, determine some *average value*, and then determine the precision of this average value. By adding all the periods and then dividing by the total number of measurements, we find that the *mean* (or average) *value* for the period of the pendulum is 3.248 seconds. (Note that for the moment we have kept the entire number; we shall modify it at the proper time.) By taking the difference between this mean value and each measurement, we obtain the *deviation* of each measurement from the mean. The sum of the absolute values of the deviations divided by the number of measurements is called the *mean deviation*, which gives an indication of the precision of the measurement. For our example, the mean deviation of the period is 0.12 second. Therefore, we should write the period of the pendulum, as measured in the laboratory, as 3.25 ± 0.12 seconds, or $3.25 \pm 4\%$ seconds (approximately).

Another way of expressing the precision of the measurement is by use of the *rms deviation*, defined as the square root of the quantity obtained by adding the *squares* of the deviations divided by the number of measurements. For our measurements, the rms (root-mean-square) deviation is 0.15 second. The extra effort in obtaining the rms deviation is well worth the task, since a relatively simple meaning may be attached to it. Assuming that the randomness that appears in the set of measurements is not due to any bias, but that these are just *normal fluctuations*, the rms deviation tells us that roughly two-thirds of all the measurements fall within this deviation from the mean value. Or, to put it another way, we now have confidence that, the very next time we take the measurement of the period of our pendulum with the same apparatus, there is a 67% chance that we shall measure a period of no more than 3.40 seconds or less than 3.10 seconds.

TABLE 2–3

3.12	3.18	3.25	3.32	3.32
3.62	3.33	3.30	3.42	3.27
3.33	3.28	3.15	3.12	3.20
3.17	3.18	3.20	3.18	2.98
3.17	3.52	3.35	3.33	3.38
3.58	3.02	3.00	3.32	3.08
3.27	3.35	3.63	3.15	3.38
3.00	3.15	3.27	2.90	3.27
2.97	3.18	3.28	3.28	3.37
3.18	3.45	3.18	3.27	3.20

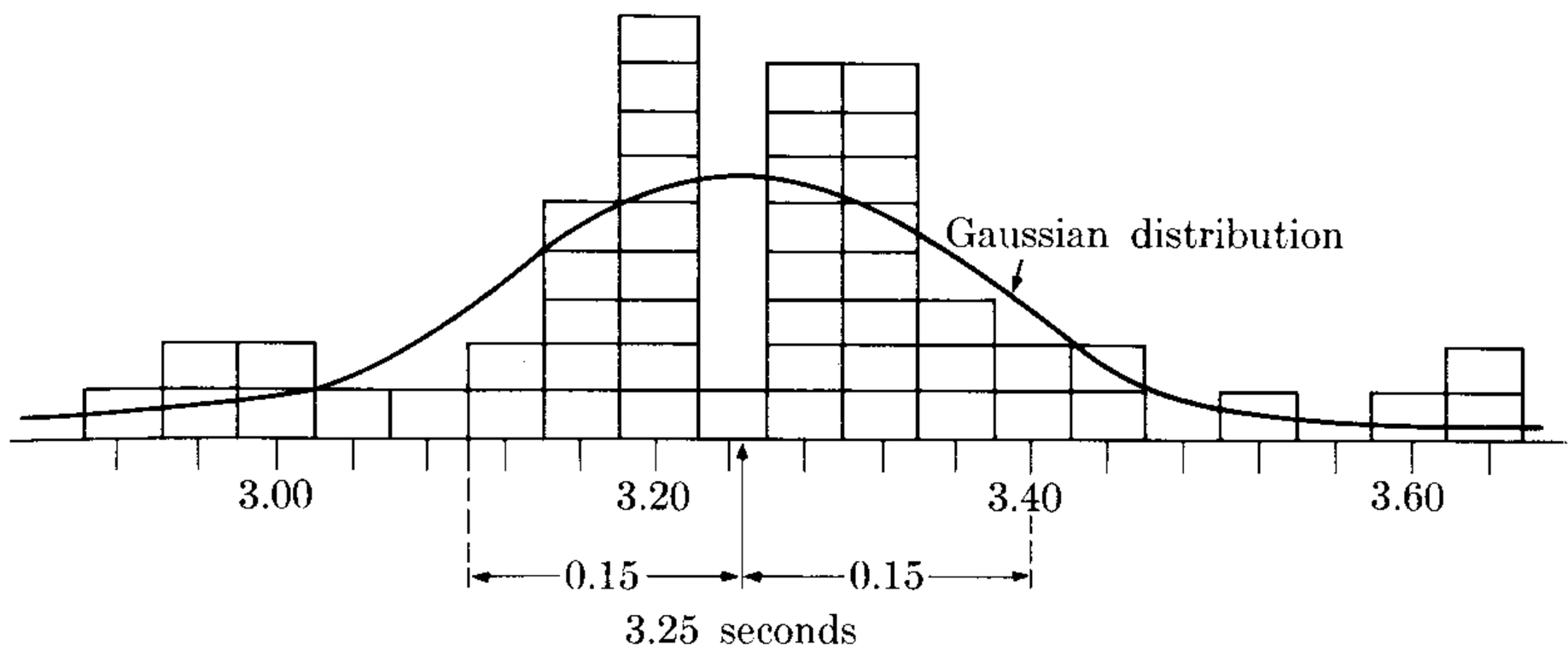

Fig. 2–9. Histogram showing the number of measurements of the period of a pendulum, as shown in Table 2–3, in each time interval of 0.04 s. The corresponding Gaussian distribution is indicated by the solid line.

To show this situation in a slightly different manner, Fig. 2–9 is a *histogram*, on which the frequency distribution of the given readings is plotted. There is an apparent randomness to the manner in which the number of the various readings occur. As more and more readings are taken, however, a definite pattern begins to take shape, showing that the frequency of appearance of a given measurement is proportionately less the larger its deviation from the mean value. The familiar bell-shaped curve is what results. Analysis shows that the curve under which the peak of the histogram fits more and more closely as the number of measurements increases has an analytic form called the *Gaussian* or *normal distribution.*

References

1. "Symbols, Units, and Nomenclature in Physics," *Physics Today*, June 1962, page 20
2. "Mathematics in the Modern World," R. Courant, *Scientific American*, September 1964, page 40
3. "Mathematics in the Physical Sciences," F. Dyson, *Scientific American*, September 1964, page 128
4. "Probability," M. Kac, *Scientific American*, September 1964, page 92
5. "The Limits of Measurement," R. Furth, *Scientific American*, July 1950, page 48
6. *A Brief History of Weights and Measures Standards of the United States.* Washington, D.C.: Government Printing Office, 1963
7. *Experimentation: An Introduction to Measurement Theory and Experiment Design*, by D. Baird. Englewood Cliffs, N.J.: Prentice-Hall, 1962
8. *Experimentation and Measurement*, by W. Youden. New York: Scholastic Book Services, Scholastic Magazines, Inc., 1962
9. *The Feynman Lectures on Physics*, Volume I, by R. Feynman, R. Leighton, and M. Sands. Reading, Mass.: Addison-Wesley, 1963, Chapters 5 and 6

Problems

2.1 Atomic masses as given in Table A–1 are expressed in *atomic mass units*, abbreviated amu. One amu is equal to 1.6604×10^{-27} kg. Express, in kilograms and grams, the masses of one atom of (a) hydrogen and (b) oxygen.

2.2 How many water molecules, each composed of one atom of oxygen and two atoms of hydrogen, are there in one gram? In 18 grams? In one cubic centimeter?

2.3 It was said in Section 2.3 that the kilogram could be defined as the mass of 5.0188×10^{25} atoms of the ^{12}C isotope, whose mass is defined as exactly 12.0000 amu. Verify that this definition is compatible with the value of the amu given in Problem 2.1.

2.4 Consider molecules of hydrogen, of oxygen, and of nitrogen, each composed of two identical atoms. Calculate the number of molecules of each of these gases (at STP) in one m^3. Use the values of relative densities given in Table 2–2. Extend your calculation to other gases. What general conclusion can you draw from this result?

2.5 Assuming that air is composed of 20% oxygen and 80% nitrogen and that these gases have molecules each comprised of two atoms, obtain the "effective" molecular mass of air. Estimate the number of molecules in one cubic centimeter of air at STP. How many molecules are oxygen, and how many are nitrogen?

2.6 The density of interstellar gas in our galaxy is estimated to be about 10^{-21} kg m^{-3}. Assuming that the gas is mainly hydrogen, estimate the number of hydrogen atoms per cubic centimeter. Compare the result with air at STP (Problem 2.5).

2.7 A glass containing water has a radius of 2 cm. In 2 hours the water level drops 1 mm. Estimate, in grams per hour, the rate at which water is evaporating. How many water molecules are evaporating per second from each square centimeter of water surface? (We suggest that the student perform this experiment and obtain his own data. Why do you get different results on different days?)

2.8 One *mole* of a substance is defined as an amount, in *grams*, numerically equal to its molecular mass expressed in amu. (When we refer to a chemical element and not a compound, we use the atomic mass.) Verify that the number of molecules (or atoms) in one mole of *any* substance is the same, and is equal to 6.0225×10^{23}. This number, called *Avogadro's constant*, is a very important physical constant.

2.9 Using the data in Tables 2–2 and A–1, estimate the average separation between molecules in hydrogen at STP (gas), in water (liquid), and in iron (solid).

2.10 The mass of an atom is practically all in its nucleus. The radius of the nucleus of uranium is 8.68×10^{-15} m. Using the atomic mass of uranium given in Table A–1, obtain the density of "nuclear matter." This nucleus contains 238 particles or "nucleons." Estimate the average separation between nucleons. From your result, would you conclude that it is reasonable to treat nuclear matter in the same manner as matter in bulk, i.e., aggregates of atoms and molecules?

2.11 Using the data from Table 13–1, obtain the average density of the earth and of the sun. When you compare these values with the data in Table 2–2, what do you conclude about the structure of these two bodies?

2.12 Estimate the average density of the universe, using the information given in Section 1.3. Assuming that all atoms are distributed uniformly over all the universe, how many atoms would there be in each cubic centimeter? Assume that all atoms are hydrogen.

2.13 The speed of light in vacuum is 2.9979×10^8 m s^{-1}. Express it in miles per hour. How many times could a light ray travel around the earth in one second?

(Use Table 13–1 for data about the earth.) What distance would it travel in one year? This distance is called a *light year*.

2.14 The radius of the earth's orbit is 1.49×10^{11} m. This length is called an *astronomical unit*. Express a light year in astronomical units (see Problem 2.13).

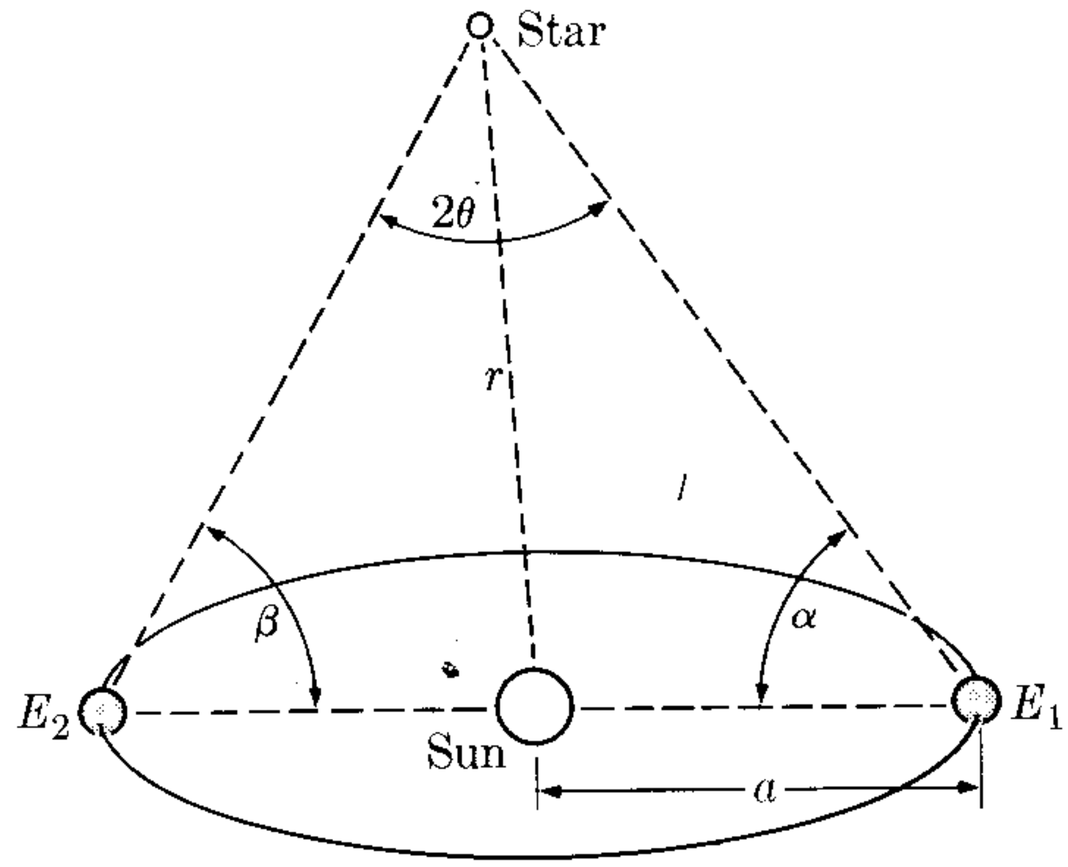

Figure 2–10

2.15 *Parallax* is the difference in the apparent direction of an object, due to a change in the position of the observer. (Hold a pencil in front of you and close first the right and then the left eye. Note that in each case the pencil appears against a different background.) *Stellar parallax* is the change in the apparent position of a star as a result of the earth's orbital motion around the sun. It is expressed quantitatively by one-half the angle subtended by the earth's diameter E_1E_2 perpendicular to the line joining the star and the sun (see Fig. 2–10). It is given by $\theta = \frac{1}{2}(180° - \alpha - \beta)$, where the angles α and β are measured at the two positions E_1 and E_2 separated by 6 months. The distance r from the star to the sun can be obtained from $a = r\theta$, where a is the radius of the earth's orbit and θ is expressed in radians. The star with the largest parallax of 0.76″ (i.e., the closest star) is α-Centauri. Find its distance from the sun expressed in meters, in light years, and in astronomical units.

2.16 A *parsec* is equal to the distance from the sun corresponding to a star whose parallax is 1″. Express the parsec in meters, light years, and astronomical units. Express the distance in parsecs in terms of the parallax in seconds of arc.

2.17 The distance between San Francisco and New York, measured along the great circle passing through these two cities, is 2571 mi. Compute the angle between the verticals at the two cities.

2.18 Using the data in the caption of Fig. 1–6, determine the angle subtended by the diameter of the Great Nebula M-31 when observed from the earth. Express it in radians and in degrees of arc. Also find the solid angle subtended by the nebula.

2.19 By looking at the table of trigonometric functions in the Appendix, find the angle at which $\sin\theta$ and $\tan\theta$ differ by (a) 10% (b) 1% (c) 0.1%. Do the same for $\sin\theta$ and θ, and for $\tan\theta$ and θ, where θ is expressed in radians. What conclusion can you draw from your result?

2.20 Given the three numbers: 49238.42; 6.382×10^4; 86.545. (a) Add the numbers. (b) Multiply all three together. (c) Add the first two and multiply by the third. (d) Multiply the last two and divide by the first. Give all answers to the proper number of significant figures.

2.21 Use the data listed in Table 2–3 to check the listed value for mean value, mean deviation, and rms deviation. How many significant figures should be quoted in the result?

2.22 The table below contains a set of ten readings of some physical property (e.g., the thickness of a piece of paper, or the weight of a stone, etc.).

116	125	108	111	113
113	124	111	136	111

(a) Determine the mean value of these numbers. Determine the mean deviation and the rms (or standard) deviation. (b) Make some judgment about keeping or

discarding the single reading of 136. (If it is discarded, the mean value of the nine remaining data points is 114.7 and the standard deviation becomes 5.6.)

2.23 Take a small ball or a pencil and let it roll down the slope of a long book. Measure the time it takes for the ball or pencil to go from rest, at the top, to the bottom when it hits the table. Repeat the experiment ten (or more) times. Determine the mean value for the roll and its precision, expressed by the rms deviation. If you do not have a sweep-second hand, use your pulse as a timing source.

2.24 Take a census of members of your class. Determine the height and weight of each member. Discriminate so that you cover only one sex and have an age span of no more than three years. Calculate the mean height, mean weight, and the rms deviation. Note that you cannot talk about the precision of your measurement in the same sense as above. Why?

3
VECTORS

3.1 Introduction
3.2 Concept of Direction
3.3 Scalars and Vectors
3.4 Addition of Vectors
3.5 Components of a Vector
3.6 Addition of Several Vectors
3.7 Application to Kinematic Problems
3.8 Scalar Product
3.9 Vector Product
3.10 Vector Representation of an Area

3.1 Introduction

This chapter will serve as an introduction to, or review of, the essential ideas associated with a branch of mathematics most important to the physical scientist. Vector algebra is important because it enables the scientist to write in a convenient, terse, shorthand notation some very complicated expressions. For example, in ordinary algebra the equation

$$3x + 2y = 6$$

is a shorthand notation for all possible pairs of x- and y-values that satisfy this equation. It is also possible to describe this same relation in yet another way; namely, by the shorthand notation of a graphical plot of this equation, as shown in Fig. 3–1. Both these examples are readily understandable to any student who has studied algebra and analytic geometry, because he understands the shorthand notation. In the same manner, vector algebra is readily understandable, once the shorthand notation is understood.

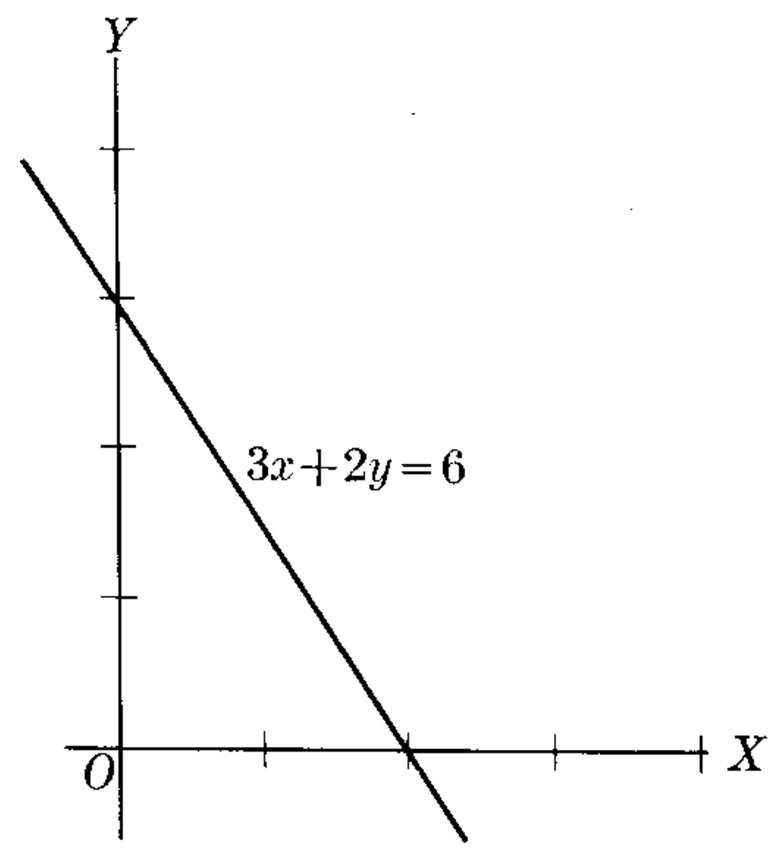

Figure 3–1

By the end of this chapter it will be discovered that vector notation is not unlike the notation of algebra and analytic geometry. The major difference is in the interpretation of this notation. A thoughtful reading of this chapter accompanied by careful working of all exercises will save the student many difficult moments in succeeding chapters.

3.2 Concept of Direction

When we are given a straight line, we can move along it in two opposite senses; these are distinguished by assigning to each a sign, plus or minus. Once the positive sense has been determined, we say that the line is oriented and call it an *axis*. The coordinate axes X and Y are oriented lines in which the positive senses are as indicated in Fig. 3–2. The positive sense is usually indicated by an arrow. An oriented line or axis defines a *direction*. Parallel lines oriented in the same sense

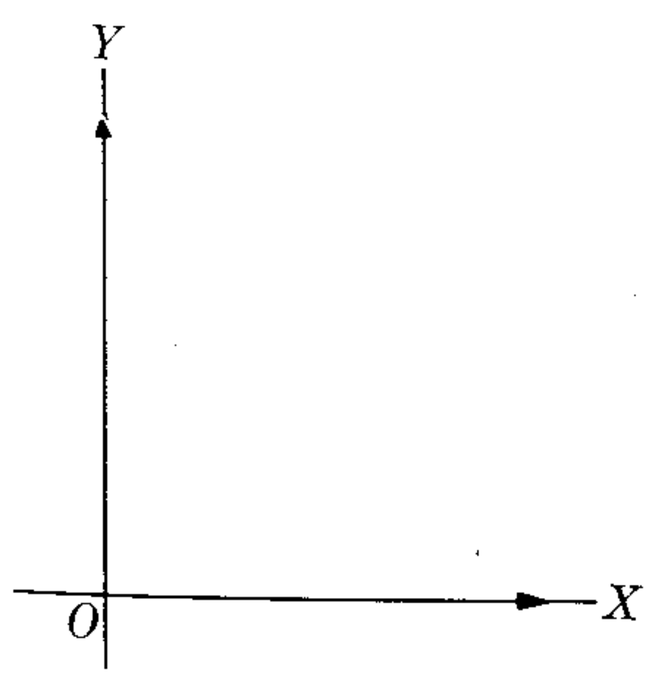

Fig. 3–2. Oriented coordinate axes.

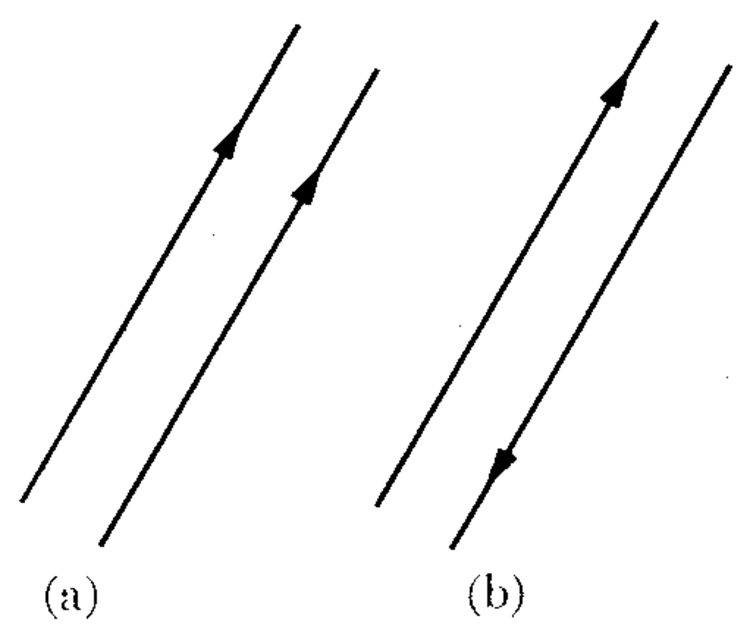

Fig. 3–3. Parallel and antiparallel directions.

define the same direction (Fig. 3–3a), but if they have opposite orientations they define opposite directions (Fig. 3–3b).

Directions in a plane are determined by an angle, which is the angle between a *reference* direction or axis and the direction we want to indicate, measured counterclockwise (Fig. 3–4). Opposite directions are determined by the angles θ and $\pi + \theta$ (or $180° + \theta$).

In three-dimensional space it is necessary to use two angles to fix a direction. The choice most frequently used is the one indicated in Fig. 3–5. The direction OA is determined by:

(i) the angle θ (less than 180°) it makes with axis OZ,

(ii) the angle ϕ between the plane AOZ and the plane XOZ, measured counterclockwise.

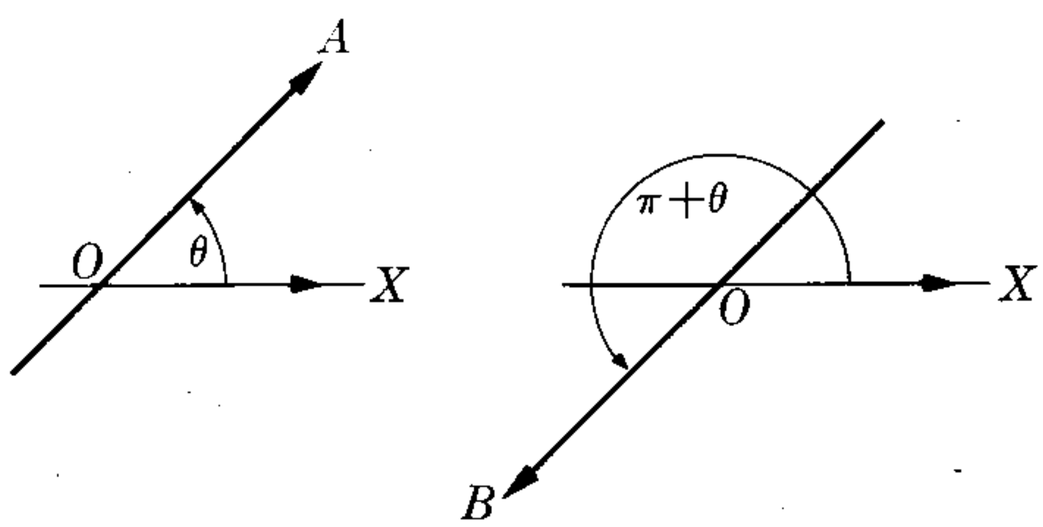

Fig. 3–4. In a plane, opposite directions are defined by angles θ and $\pi + \theta$.

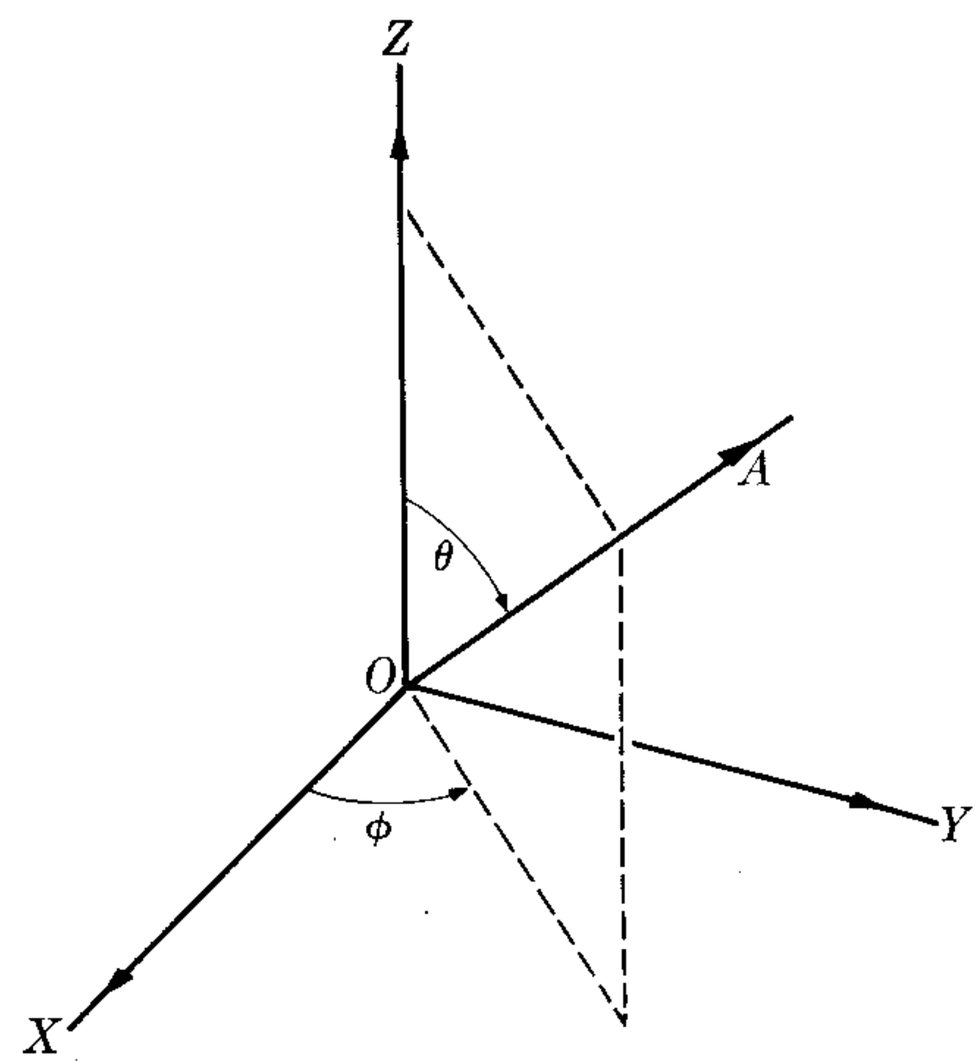

Fig. 3–5. Two angles are required to define a direction in space.

We leave it to the student to verify that the opposite direction is determined by the angles $\pi - \theta$ and $\pi + \phi$.

3.3 Scalars and Vectors

Many physical quantities are completely determined by their magnitude, expressed in some convenient unit. These quantities are called *scalars*. For example, to specify the volume of a body it is necessary only to indicate how many cubic meters or cubic feet it occupies. To know a temperature it is enough to read a conveniently located thermometer. Time, mass, charge, and energy are also scalar quantities.

Other physical quantities require, for their complete determination, a direction in addition to their magnitude. Such quantities we call *vectors*. The most obvious case is *displacement*. The displacement of a body is determined by the effective *distance* it has moved and the *direction* in which it moved. For example, if a particle is displaced from O to A (Fig. 3–6), the displacement is determined by the distance $d = 5$ and the angle $\theta \cong 37°$. Velocity is also a vector quantity, since the motion is determined by the rate of displacement *and* the direction of the

displacement. Similarly, force and acceleration are vector quantities. Other physical quantities that are vectors will appear in succeeding chapters.

Vectors are represented graphically by line segments having the same direction as the vector (indicated by an arrow) and a length proportional to the magnitude. When written down, a symbol in boldface type such as $\boldsymbol{V}$ or with an arrow, as $\vec{V}$, indicates a vector (i.e., magnitude plus direction), while V refers to the magnitude only (sometimes, however, the magnitude will be indicated by $|\boldsymbol{V}|$). A *unit vector* is a vector whose magnitude is one. A vector $\boldsymbol{V}$ parallel to the unit vector $\boldsymbol{u}$ can be expressed in the form

$$\boldsymbol{V} = \boldsymbol{u}V. \tag{3.1}$$

The negative of a vector is another vector that has the same magnitude but opposite direction.

If two vectors $\boldsymbol{V}$ and $\boldsymbol{V}'$ are parallel to each other, they may be written as $\boldsymbol{V} = \boldsymbol{u}V$ and $\boldsymbol{V}' = \boldsymbol{u}V'$, where the unit vector $\boldsymbol{u}$ is the same. Thus if $\lambda = V/V'$ we may write

$$\boldsymbol{V} = \lambda \boldsymbol{V}'.$$

Reciprocally, wherever an equation such as the preceding holds for two vectors $\boldsymbol{V}$ and $\boldsymbol{V}'$, they are parallel.

3.4 Addition of Vectors

To understand the rule for addition of vectors we shall consider first the case of displacements. If a particle is displaced first from A to B (Fig. 3–7), represented by vector $\boldsymbol{d}_1$, and then from B to C, or $\boldsymbol{d}_2$, the result is equivalent to a single displacement from A to C, or $\boldsymbol{d}$, which we write symbolically as $\boldsymbol{d} = \boldsymbol{d}_1 + \boldsymbol{d}_2$. This expression must not be confused with $d = d_1 + d_2$, which refers only to the magnitudes and does not hold in this case. The procedure can be generalized to fit any kind of vectors. Therefore we say that $\boldsymbol{V}$ is the sum of $\boldsymbol{V}_1$ and $\boldsymbol{V}_2$ if it is ob-

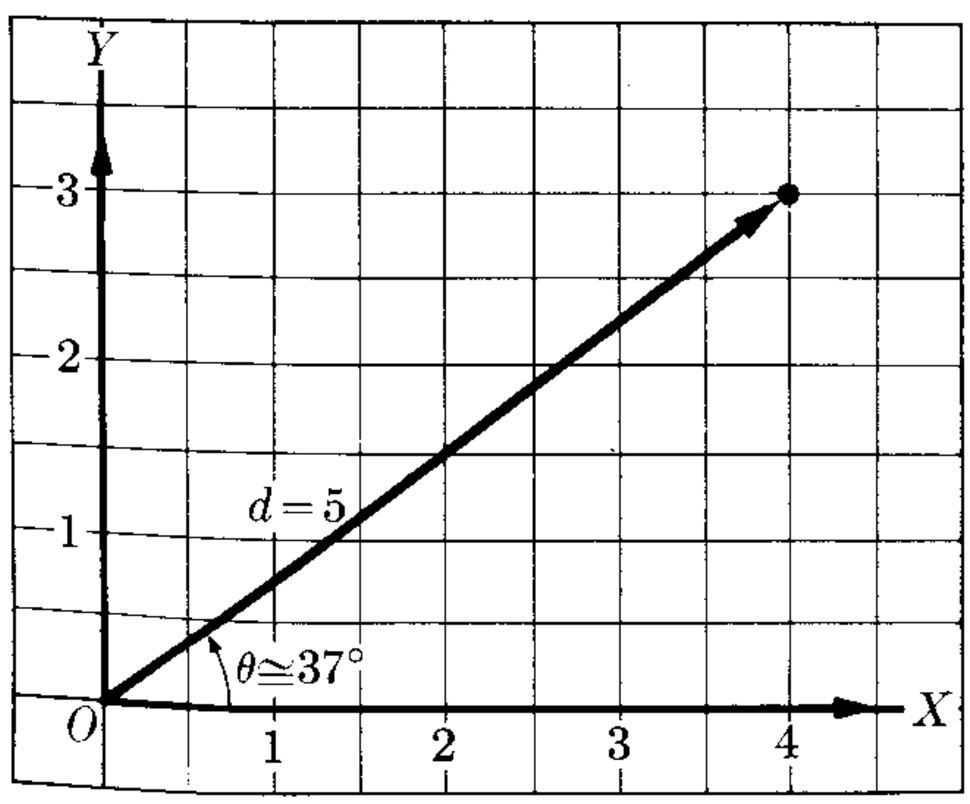

Fig. 3–6. Displacement is a vector quantity.

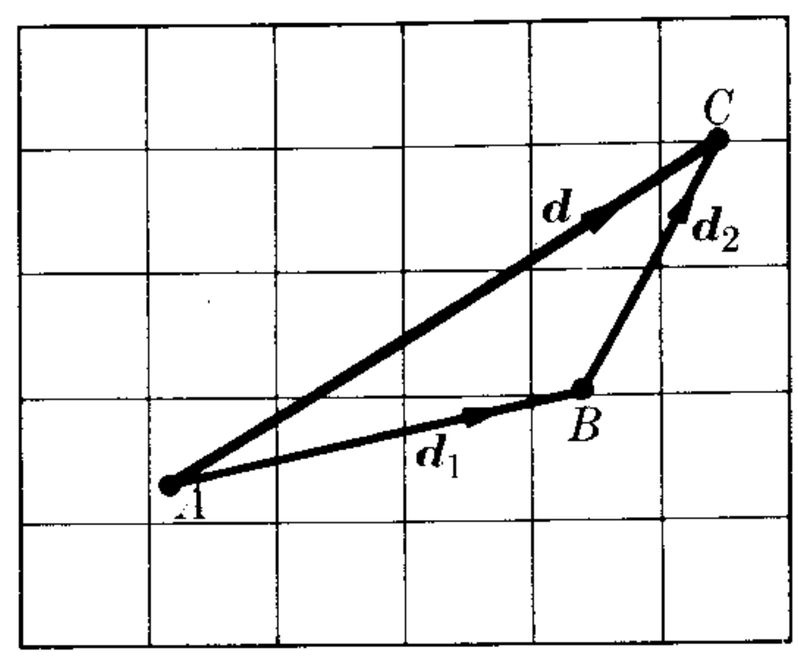

Fig. 3–7. Vector addition of two displacements.

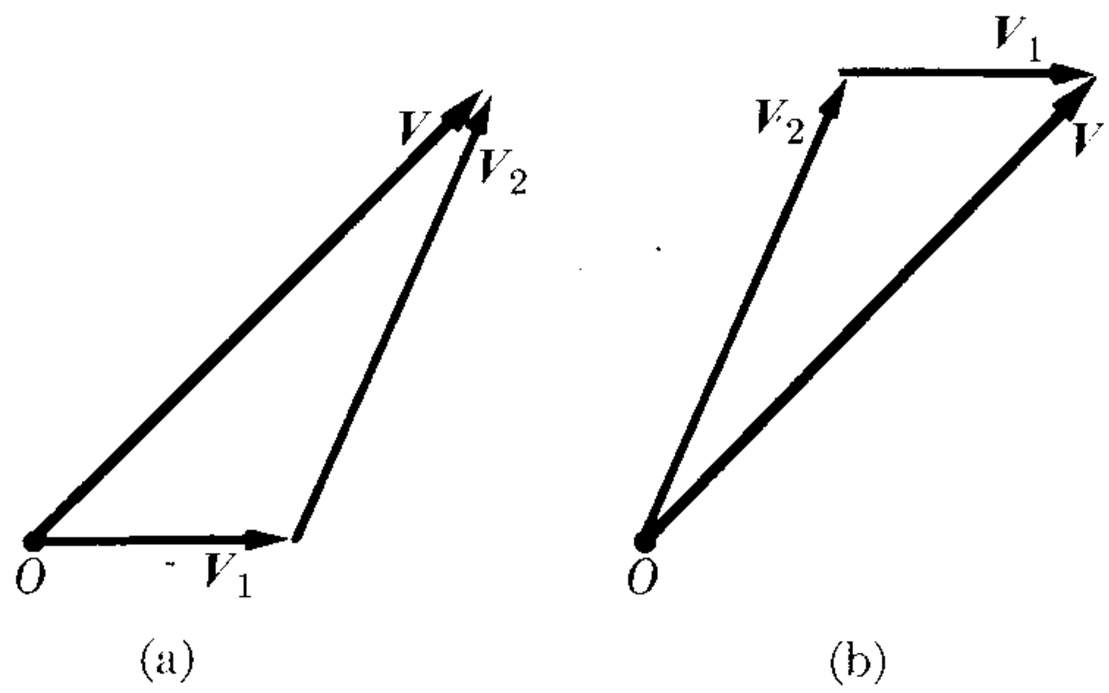

Fig. 3–8. Vector addition is commutative.

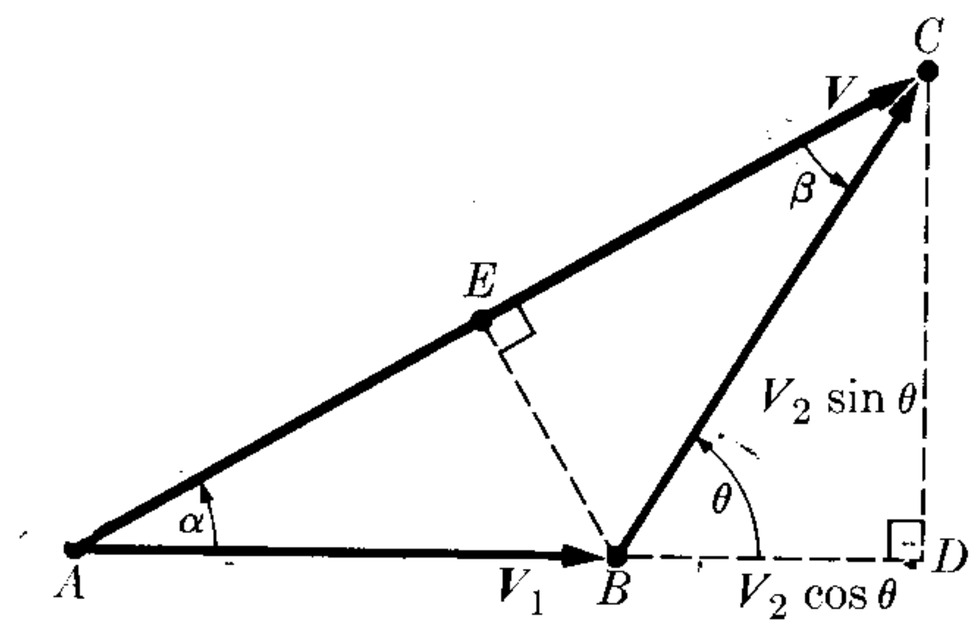

Figure 3–9

tained as indicated in Fig. 3–8. We can also see in the figure that the vector sum is commutative, the result being the same if the order in which the vectors are added is reversed; this is a direct consequence of the geometry of the method. The geometrical relation of Fig. 3–8 is expressed algebraically by

$$\boldsymbol{V} = \boldsymbol{V}_1 + \boldsymbol{V}_2. \tag{3.2}$$

To compute the magnitude of $\boldsymbol{V}$ we see from Fig. 3–9 that $(AC)^2 = (AD)^2 + (DC)^2$. But $AD = AB + BD = V_1 + V_2 \cos\theta$ and $DC = V_2 \sin\theta$. Therefore $V^2 = (V_1 + V_2\cos\theta)^2 + (V_2 \sin\theta)^2 = V_1^2 + V_2^2 + 2V_1V_2\cos\theta$, or

$$V = \sqrt{V_1^2 + V_2^2 + 2V_1V_2\cos\theta}. \tag{3.3}$$

To determine the direction of $\boldsymbol{V}$, we need only find the angle α. From the figure we see that in triangle $ACD, CD = AC \sin\alpha$, and in triangle $BDC, CD = BC \sin\theta$. Therefore $V \sin\alpha = V_2 \sin\theta$ or

$$\frac{V}{\sin\theta} = \frac{V_2}{\sin\alpha}.$$

Similarly, $BE = V_1 \sin\alpha = V_2 \sin\beta$ or

$$\frac{V_2}{\sin\alpha} = \frac{V_1}{\sin\beta}.$$

Combining both results, one gets the symmetrical relation

$$\frac{V}{\sin\theta} = \frac{V_1}{\sin\beta} = \frac{V_2}{\sin\alpha}. \tag{3.4}$$

We have thus derived two fundamental trigonometric expressions, the Law of Cosines and the Law of Sines. In the special case when $\boldsymbol{V}_1$ and $\boldsymbol{V}_2$ are perpendicular (Fig. 3–10), $\theta = \frac{1}{2}\pi$ and the following relations hold:

$$V = \sqrt{V_1^2 + V_2^2}; \qquad \tan\alpha = \frac{V_2}{V_1}. \tag{3.5}$$

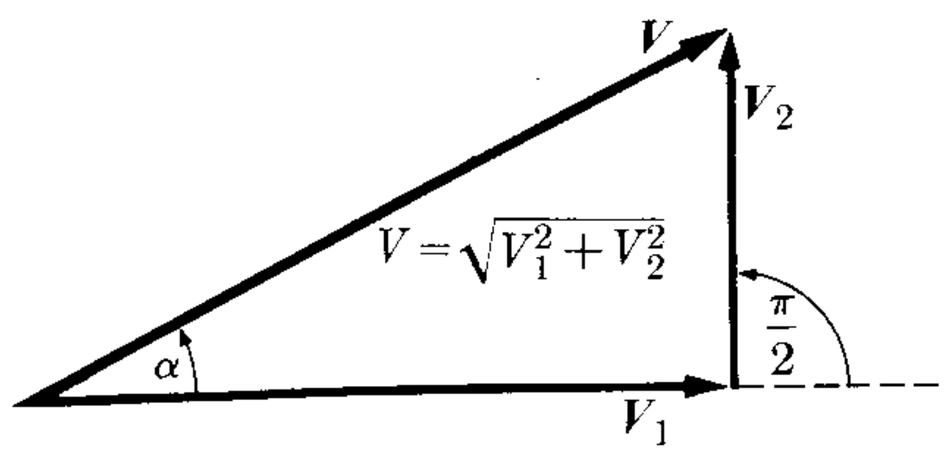

Figure 3–10

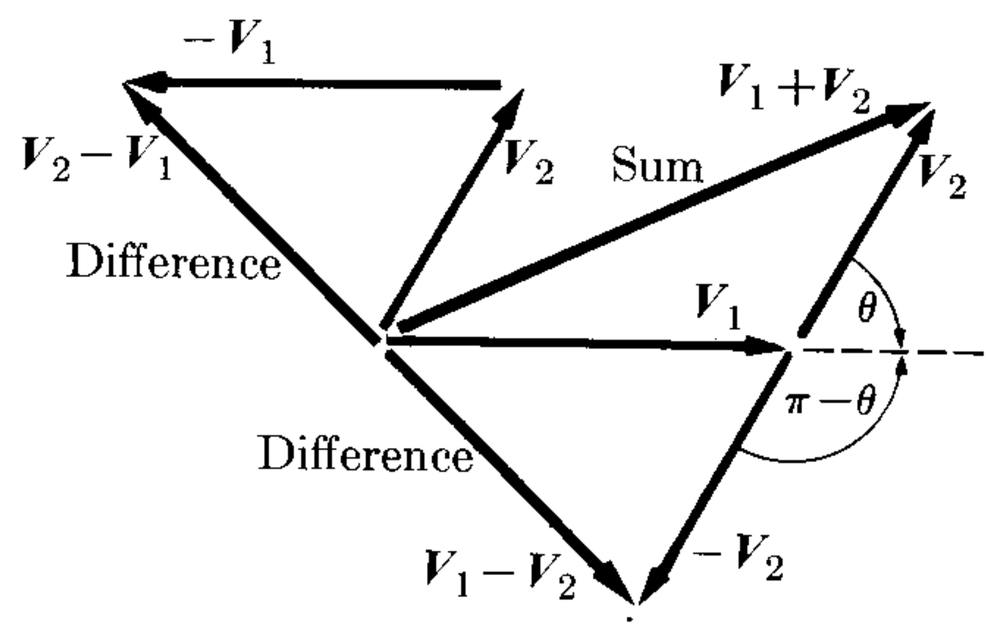

Fig. 3–11. Vector difference is anticommutative.

The *difference* between two vectors is obtained by adding to the first the negative (or opposite) of the second (Fig. 3–11); that is,

$$\boldsymbol{D} = \boldsymbol{V}_1 - \boldsymbol{V}_2 = \boldsymbol{V}_1 + (-\boldsymbol{V}_2).$$

Note that $\boldsymbol{V}_2 - \boldsymbol{V}_1 = -\boldsymbol{D}$; that is, if the vectors are subtracted in the reverse order, the opposite vector results; i.e., vector difference is anticommutative. The magnitude of the difference is

$$D = \sqrt{V_1^2 + V_2^2 + 2V_1V_2 \cos(\pi - \theta)}$$

or

$$D = \sqrt{V_1^2 + V_2^2 - 2V_1V_2 \cos\theta}. \tag{3.6}$$

EXAMPLE 3.1. Given two vectors: $\boldsymbol{A}$ is 6 units long and makes an angle of $+36°$ with the positive X-axis; $\boldsymbol{B}$ is 7 units long and is in the direction of the negative X-axis. Find: (a) the sum of the two vectors; (b) the difference between the two vectors.

Solution: Before starting to apply the previous equations, *draw* the vectors on a set of coordinate axes (Fig. 3–12). We see from Fig. 3–7, 3–8, or 3–9 that, in order to add the two vectors, one of the vectors must be set with its tail at the head of the other. This may be done by moving either vector or both, just so long as the direction of the vector is not changed (Fig. 3–13). In any case the vector $\boldsymbol{C} = \overrightarrow{OE}$ results.

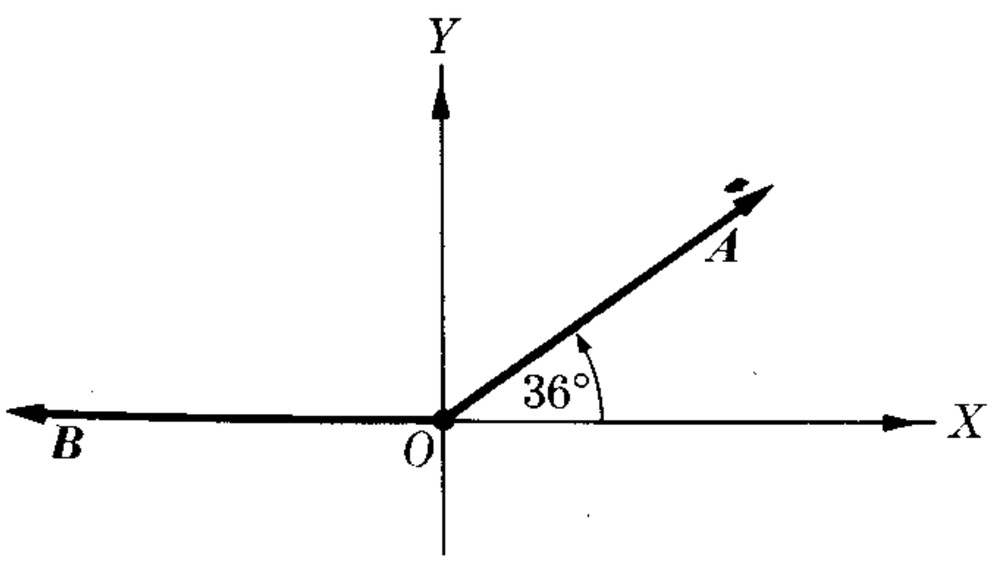

Figure 3–12

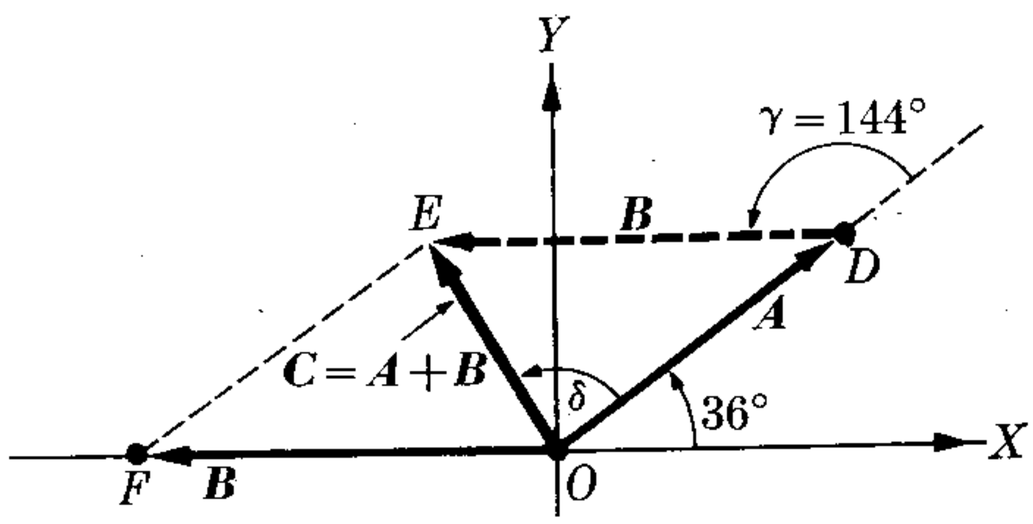

Figure 3–13

(a) From Fig. 3–13 we see that we may write either: $\boldsymbol{C} = \boldsymbol{A} + \boldsymbol{B}$ or $\boldsymbol{C} = \boldsymbol{B} + \boldsymbol{A}$.

Using the triangle ODE, $\boldsymbol{C}$ may be found as $\boldsymbol{A} + \boldsymbol{B}$. In order to find the magnitude of $\boldsymbol{C}$ by application of Eq. (3.3), we first recognize that we can equate $\boldsymbol{A}$ to $\boldsymbol{V}_1$, $\boldsymbol{B}$ to $\boldsymbol{V}_2$, $\boldsymbol{C}$ to $\boldsymbol{V}$, and the angle $\gamma = 180° - 36° = 144°$ to the angle θ. This results in:

$$C = \sqrt{36 + 49 + 2(6)(7)\cos 144°} = 4.128 \text{ units.}$$

To find the angle between $\boldsymbol{C}$ and $\boldsymbol{A}$, we apply Eq. (3.4), which reads in this case

$$\frac{C}{\sin\gamma} = \frac{B}{\sin\delta},$$

so that

$$\sin\delta = \frac{B\sin 144°}{C} = 0.996 \qquad \text{and} \qquad \delta \cong 85°.$$

Therefore $\boldsymbol{C}$ is 4.128 units long and in a direction that makes an angle of $36° + 85° = +121°$ with the positive X-axis.

(b) To find the difference between two vectors, we must know, just as in ordinary arithmetic, which quantity is being subtracted from which. That is to say, if the vector $\boldsymbol{D}$ is defined as $\boldsymbol{A} - \boldsymbol{B}$ (Fig. 3–14), then $\boldsymbol{B} - \boldsymbol{A}$ is equal to $-\boldsymbol{D}$.

Thus, using the statements of equivalence from part (a) above, and from Eq. (3.6), we find the magnitude of $\boldsymbol{D} = \boldsymbol{A} - \boldsymbol{B}$ as

$$D = \sqrt{36 + 49 - 2(6)(7)\cos 144°} = 12.31 \text{ units.}$$

To find the direction of $\boldsymbol{D}$, we use Eq. (3.4):

$$\frac{D}{\sin 36°} = \frac{|-\boldsymbol{B}|}{\sin\alpha};$$

or, since $|-\boldsymbol{B}| = B$,

$$\sin\alpha = \frac{B\sin 36°}{D} = 0.334$$

or

$$\alpha = 19.5°;$$

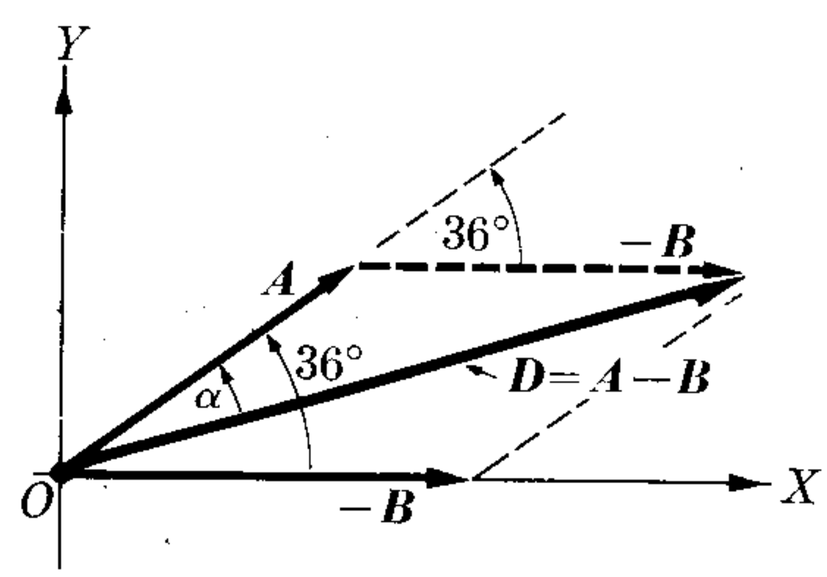

Figure 3–14

and thus $\boldsymbol{D}$ is 12.31 units long and makes an angle of $36° - 19.5° = 16.5°$ with the positive X-axis.

It is left as an exercise for the student to prove that $-\boldsymbol{D} = \boldsymbol{B} - \boldsymbol{A}$ is 12.31 units long and makes an angle of $+196.5°$ with the positive X-axis.

3.5 Components of a Vector

Any vector $\boldsymbol{V}$ can always be considered as the sum of two (or more) vectors, and the number of possibilities is infinite. Each set of vectors which, when added, give $\boldsymbol{V}$ are called the *components* of $\boldsymbol{V}$.

The ones most commonly used are the *rectangular components;* i.e., the vector is expressed as the sum of two mutually perpendicular vectors (Fig. 3–15). Then, as we see from the figure, $\boldsymbol{V} = \boldsymbol{V}_x + \boldsymbol{V}_y$, with

$$V_x = V\cos\alpha \qquad \text{and} \qquad V_y = V\sin\alpha. \tag{3.7}$$

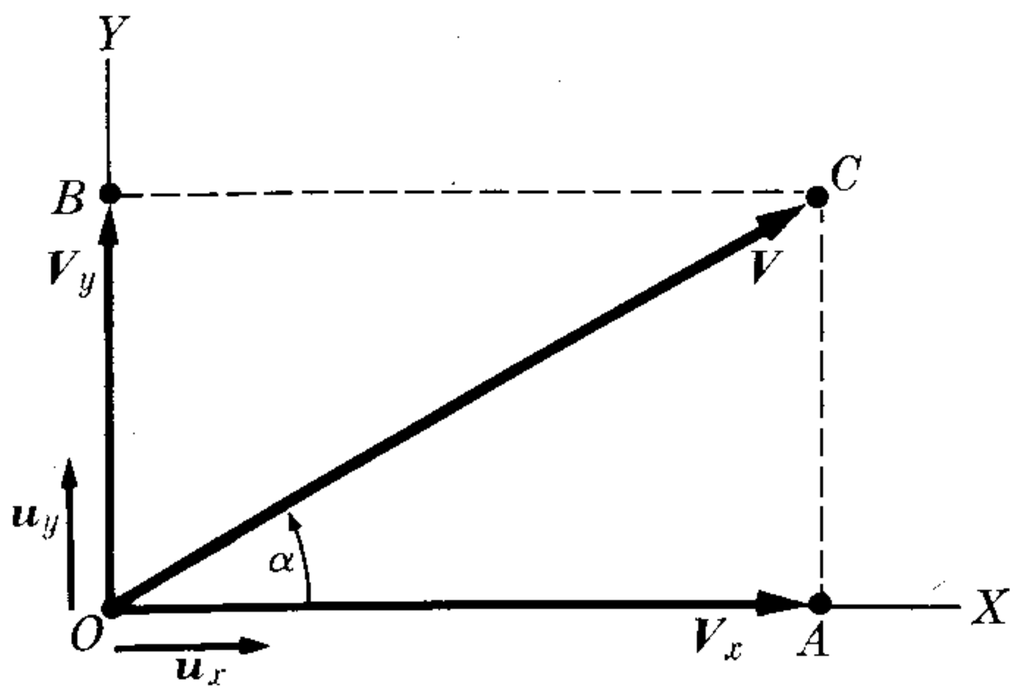

Fig. 3–15. Rectangular components of a vector in a plane.

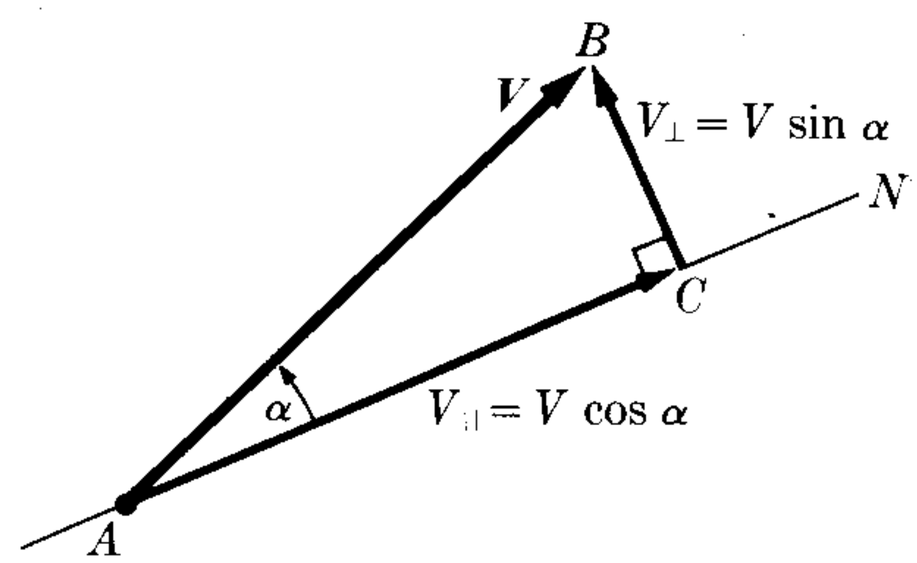

Fig. 3–16. Components of a vector in a certain direction.

Defining unit vectors $\boldsymbol{u}_x$ and $\boldsymbol{u}_y$ in the directions of the X- and Y-axes, we note that

$$\boldsymbol{V}_x = \overrightarrow{OA} = \boldsymbol{u}_x V_x, \qquad \boldsymbol{V}_y = \overrightarrow{OB} = \boldsymbol{u}_y V_y.$$

Therefore we have

$$\boldsymbol{V} = \boldsymbol{u}_x V_x + \boldsymbol{u}_y V_y. \tag{3.8}$$

This equation expresses a vector in terms of its rectangular components in two dimensions. Using Eq. (3.7), we may also write for Eq. (3.8) $\boldsymbol{V} = \boldsymbol{u}_x V \cos \alpha + \boldsymbol{u}_y V \sin \alpha = V(\boldsymbol{u}_x \cos \alpha + \boldsymbol{u}_y \sin \alpha)$. When we compare this result with Eq. (3.1), or just make $V = 1$, we conclude that a unit vector can be written as

$$\boldsymbol{u} = \boldsymbol{u}_x \cos \alpha + \boldsymbol{u}_y \sin \alpha. \tag{3.9}$$

Note that the component of a vector in a particular direction is equal to the projection of the vector in that direction (Fig. 3–16). From the figure, we see that $V_{\parallel} = V \cos \alpha$. Also from Fig. 3–16, we see that BC is that component of $\boldsymbol{V}$ perpendicular to the chosen direction AN, and we can see that $V_\perp = BC = V \sin \alpha$. Thus

$$\boldsymbol{V} = \boldsymbol{V}_{\parallel} + \boldsymbol{V}_\perp.$$

There are three rectangular components in space: V_x, V_y, V_z (Fig. 3–17). The student may verify from the figure that they are computed according to

$$\begin{aligned} V_x &= V \sin \theta \cos \phi, \\ V_y &= V \sin \theta \sin \phi, \\ V_z &= V \cos \theta, \end{aligned} \tag{3.10}$$

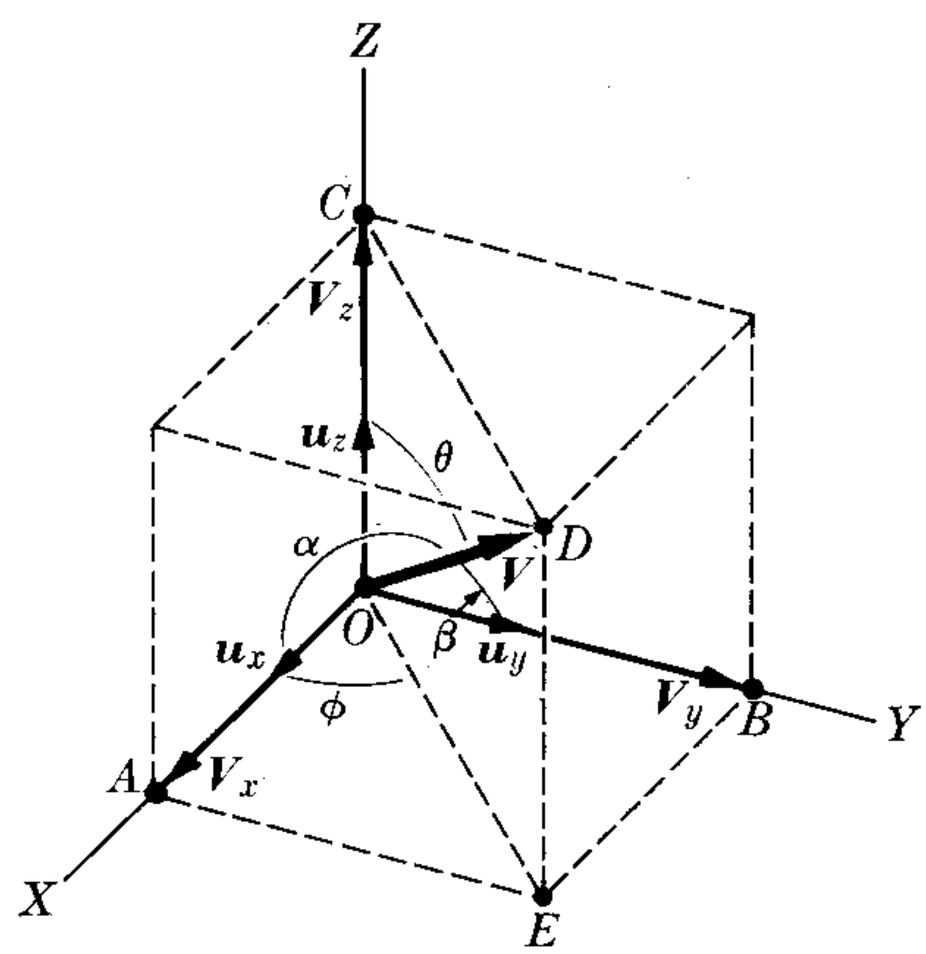

Fig. 3–17. Rectangular components of a vector in three dimensions.

from which it follows, by direct computation, that

$$V^2 = V_x^2 + V_y^2 + V_z^2. \tag{3.11}$$

Defining three unit vectors $\boldsymbol{u}_x$, $\boldsymbol{u}_y$, $\boldsymbol{u}_z$ parallel to the X-, Y-, and Z-axes, respectively, we have

$$\boldsymbol{V} = \boldsymbol{u}_x V_x + \boldsymbol{u}_y V_y + \boldsymbol{u}_z V_z. \tag{3.12}$$

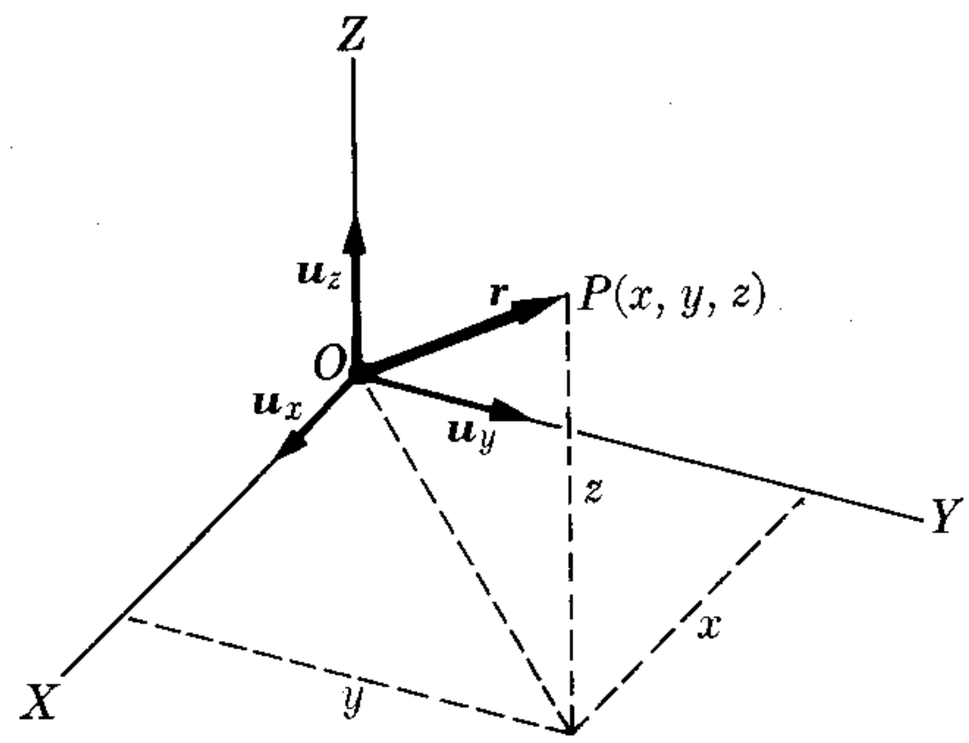

Fig. 3–18. The position vector.

Note that if we designate by α and β the angles the vector $\boldsymbol{V}$ makes with the X- and Y-axes, respectively, we also have, by similarity with the third of Eqs. (3.10),

$$V_x = V \cos \alpha, \qquad V_y = V \cos \beta.$$

Using these two and $V_z = V \cos \theta$ in Eq. (3.11), we obtain the relation

$$\cos^2 \alpha + \cos^2 \beta + \cos^2 \theta = 1.$$

The quantities $\cos \alpha$, $\cos \beta$, and $\cos \theta$ are called the *direction cosines* of a vector.

An important case of a three-dimensional vector is the *position vector* $\boldsymbol{r} = \overrightarrow{OP}$ of a point P having coordinates (x, y, z). From Fig. 3–18 we see that

$$\boldsymbol{r} = \overrightarrow{OP} = \boldsymbol{u}_x x + \boldsymbol{u}_y y + \boldsymbol{u}_z z. \tag{3.13}$$

The relative position vector of two points P_1 and P_2 is $\boldsymbol{r}_{21} = \overrightarrow{P_1P_2}$ (Fig. 3–19). From the figure we note that $\overrightarrow{OP_2} = \overrightarrow{OP_1} + \overrightarrow{P_1P_2}$, so that

$$\begin{aligned} \boldsymbol{r}_{21} = \overrightarrow{P_1P_2} &= \overrightarrow{OP_2} - \overrightarrow{OP_1} = \boldsymbol{r}_2 - \boldsymbol{r}_1 \\ &= \boldsymbol{u}_x(x_2 - x_1) + \boldsymbol{u}_y(y_2 - y_1) + \boldsymbol{u}_z(z_2 - z_1). \end{aligned} \tag{3.14}$$

Note that $\overrightarrow{P_2P_1} = -\overrightarrow{P_1P_2}$. It should be observed that, by applying Eq. (3.11) to Eq. (3.14), we obtain the expression of analytic geometry for the distance between two points:

$$r_{21} = \sqrt{(x_2 - x_1)^2 + (y_2 - y_1)^2 + (z_2 - z_1)^2}.$$

EXAMPLE 3.2. Find the distance between the two points (6, 8, 10) and (−4, 4, 10).

Solution: We draw a set of rectangular axes and identify the two points (Fig. 3–20). We see that both points are in a plane parallel to the XY-plane, since they are both a distance (height) of 10 units in the Z-direction. From Eq. (3.14), we find that the vector $\boldsymbol{r}_{21}$ is

$$\begin{aligned} \boldsymbol{r}_{21} &= \boldsymbol{u}_x(-4 - 6) + \boldsymbol{u}_y(4 - 8) + \boldsymbol{u}_z(10 - 10) \\ &= \boldsymbol{u}_x(-10) + \boldsymbol{u}_y(-4) + \boldsymbol{u}_z(0) = -\boldsymbol{u}_x(10) - \boldsymbol{u}_y(4). \end{aligned}$$

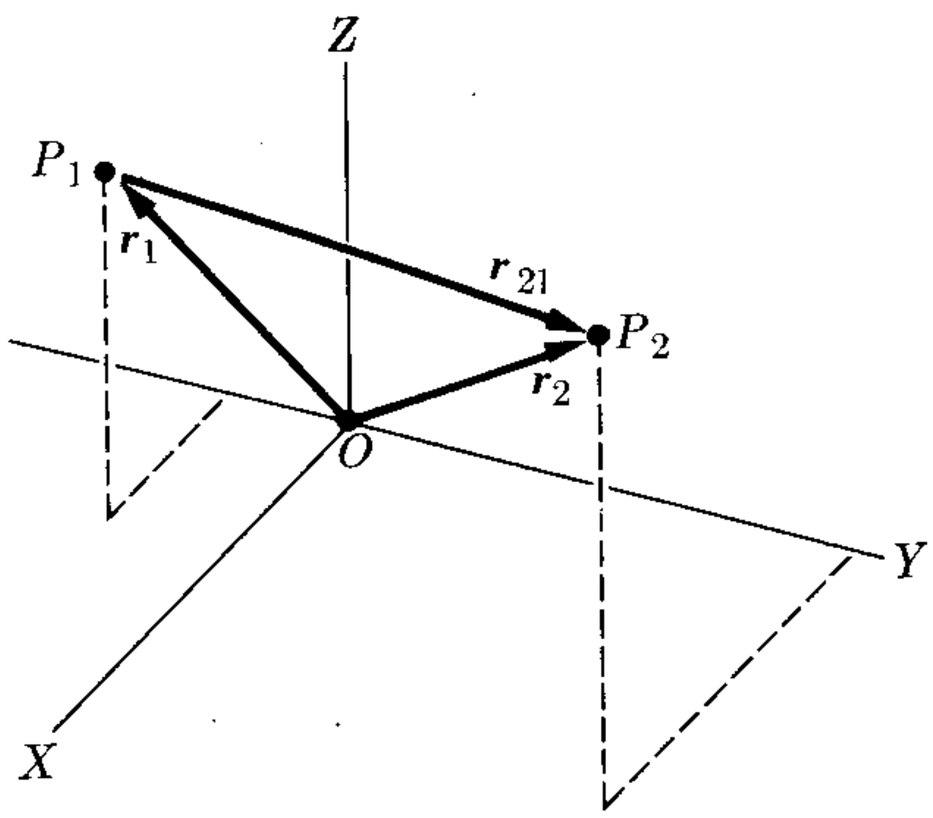

Figure 3–19

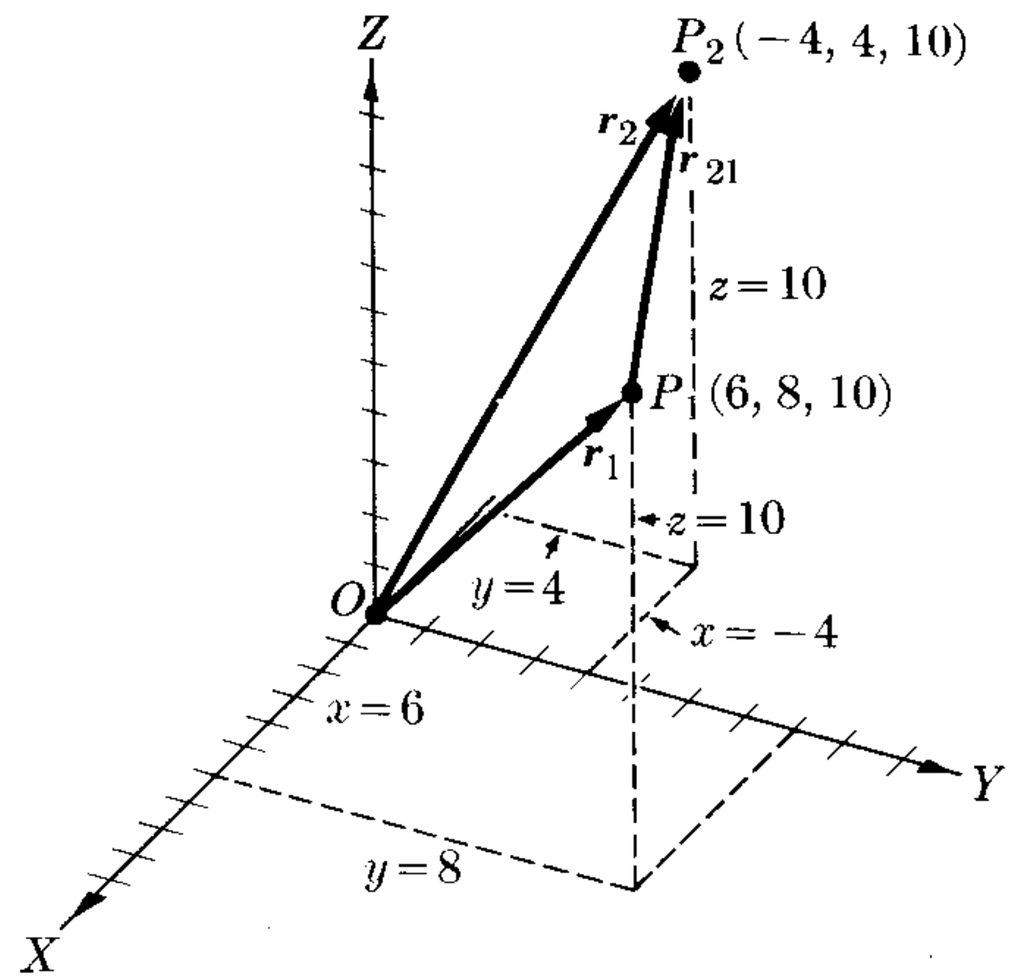

Figure 3–20

Using Eq. (3.11), we find that the magnitude is

$$r_{21}^2 = 100 + 16 = 116 \qquad \text{or} \qquad r_{21} = 10.77 \text{ units.}$$

EXAMPLE 3.3. Find the components of the vector that is 13 units long and makes an angle θ of 22.6° with the Z-axis, and whose projection in the XY-plane makes an angle ϕ of 37° with the $+X$-axis (*cf.* Fig. 3–17). Find also the angles with the X- and Y-axes.

Solution: Using Fig. 3–17 as our figure for the problem, we say that

$$V = 13 \text{ units}, \qquad \theta = 22.6°, \qquad \cos\theta = 0.923,$$
$$\sin\theta = 0.384, \qquad \phi = 37°, \qquad \cos\phi = 0.800, \qquad \sin\phi = 0.600.$$

Now a simple application of Eq. (3.10) yields

$$V_x = 13(0.384)\,(0.800) = 4.0 \text{ units},$$
$$V_y = 13(0.384)\,(0.600) = 3.0 \text{ units},$$
$$V_z = 13(0.923) = 12.0 \text{ units}.$$

In terms of Eq. (3.12) we may write:

$$\boldsymbol{V} = \boldsymbol{u}_x(4) + \boldsymbol{u}_y(3) + \boldsymbol{u}_z(12).$$

For the angles α and β that $\boldsymbol{V}$ makes with the X- and Y-axes, we have

$$\cos\alpha = \frac{V_x}{V} = 0.308 \qquad \text{or} \qquad \alpha = 72.1°,$$

$$\cos\beta = \frac{V_y}{V} = 0.231 \qquad \text{or} \qquad \beta = 77°.$$

EXAMPLE 3.4. Express the equation of a straight line parallel to a vector $\boldsymbol{V} = \boldsymbol{u}_x A + \boldsymbol{u}_y B + \boldsymbol{u}_z C$ and passing through a point P_0.

Solution: Designating by $\boldsymbol{r}_0$ the position vector of P_0 (Fig. 3–21) and by $\boldsymbol{r}$ the position vector on any point P on the straight line, we have from Eq. (3.14) that $\overrightarrow{P_0P} = \boldsymbol{r} - \boldsymbol{r}_0$. But the vector $\overrightarrow{P_0P}$ must be parallel to $\boldsymbol{V}$, and therefore we may write $\overrightarrow{P_0P} = \lambda \boldsymbol{V}$, where λ is a parameter still undetermined. Then

$$\boldsymbol{r} - \boldsymbol{r}_0 = \lambda \boldsymbol{V}$$

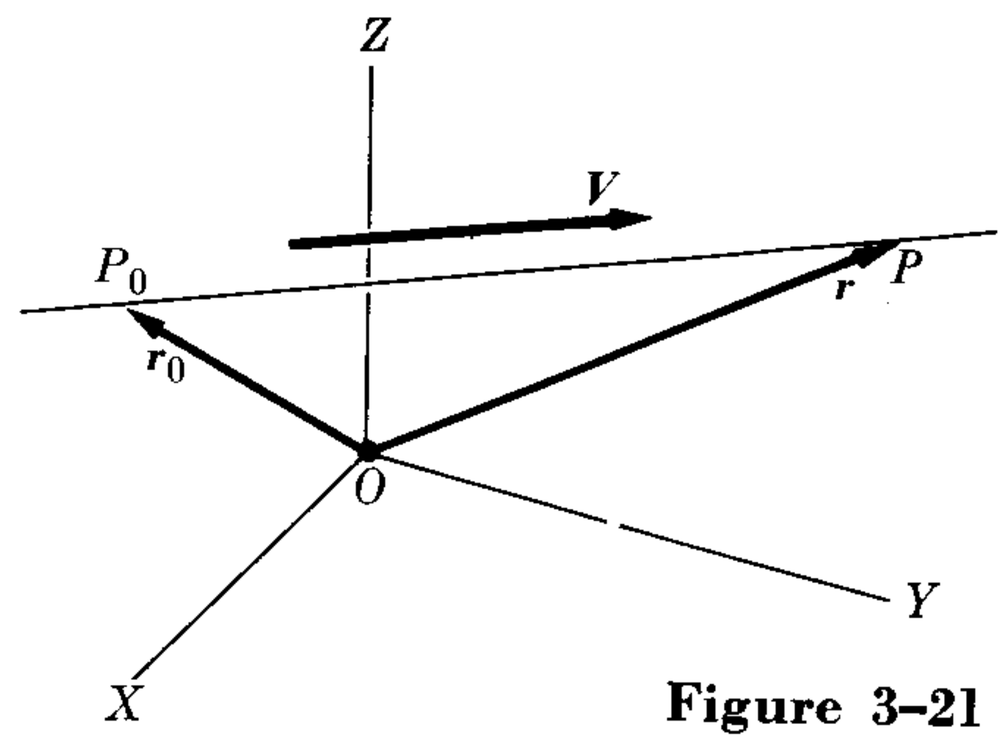

Figure 3–21

is the equation of the straight line, and by varying λ, we obtain the different position vectors $\boldsymbol{r}$. Separating the equation into rectangular components, we have

$$x - x_0 = \lambda A, \qquad y - y_0 = \lambda B, \qquad z - z_0 = \lambda C,$$

or

$$\frac{x - x_0}{A} = \frac{y - y_0}{B} = \frac{z - z_0}{C},$$

which is one of the forms used in analytic geometry to express a straight line.

3.6 Addition of Several Vectors

To add several vectors $\boldsymbol{V}_1, \boldsymbol{V}_2, \boldsymbol{V}_3, \ldots$, we extend the procedure indicated in Fig. 3–8 for the case of two vectors. The method for three vectors is shown in Fig. 3–22. That is, we draw one vector after another, the vector sum being indicated by the line going from the origin of the first to the end of the last. Then

$$\boldsymbol{V} = \boldsymbol{V}_1 + \boldsymbol{V}_2 + \boldsymbol{V}_3 + \cdots. \tag{3.15}$$

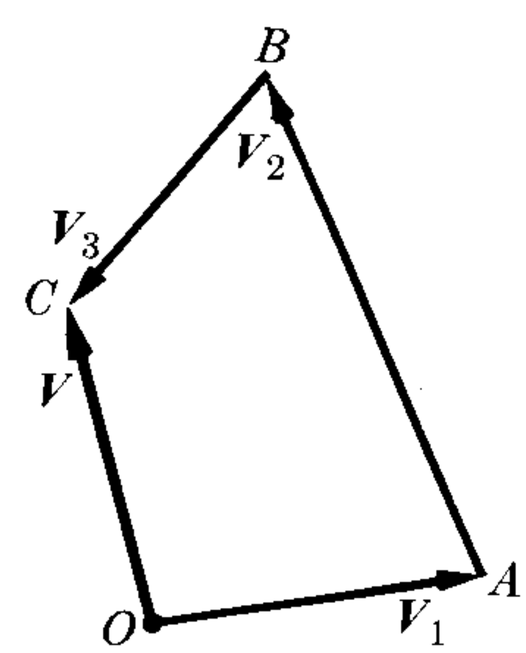

Fig. 3–22. Addition of several vectors.

There is no simple formula to express $\boldsymbol{V}$ in terms of $\boldsymbol{V}_1, \boldsymbol{V}_2, \boldsymbol{V}_3, \ldots$, and it is better to utilize the method of components. Let us consider, for simplicity, the case where all vectors are in one plane, so that we need to use only two components. Then

$$\begin{aligned}\boldsymbol{V} &= (\boldsymbol{u}_x V_{1x} + \boldsymbol{u}_y V_{1y}) + (\boldsymbol{u}_x V_{2x} + \boldsymbol{u}_y V_{2y}) \\ &\quad + (\boldsymbol{u}_x V_{3x} + \boldsymbol{u}_y V_{3y}) + \cdots \\ &= \boldsymbol{u}_x(V_{1x} + V_{2x} + V_{3x} + \cdots) \\ &\quad + \boldsymbol{u}_y(V_{1y} + V_{2y} + V_{3y} + \cdots).\end{aligned}$$

Therefore

$$\begin{aligned}V_x &= V_{1x} + V_{2x} + V_{3x} + \cdots = \textstyle\sum_i V_{ix} = \sum_i V_i \cos \alpha_i, \\ V_y &= V_{1y} + V_{2y} + V_{3y} + \cdots = \textstyle\sum_i V_{iy} = \sum_i V_i \sin \alpha_i,\end{aligned} \tag{3.16}$$

where α_i is the angle $\boldsymbol{V}_i$ makes with the positive X-axis and $V_i \cos \alpha_i$ and $V_i \sin \alpha_i$ are the components of $\boldsymbol{V}_i$ along the X- and Y-axes. Once we know V_x and V_y, we compute $\boldsymbol{V}$, using Eq. (3.5). We now illustrate the procedure with a numerical example.

EXAMPLE 3.5. Find the resultant of the sum of the following five vectors:

$$\boldsymbol{V}_1 = \boldsymbol{u}_x(4) + \boldsymbol{u}_y(-3) \text{ units}, \qquad \boldsymbol{V}_2 = \boldsymbol{u}_x(-3) + \boldsymbol{u}_y(2) \text{ units},$$
$$\boldsymbol{V}_3 = \boldsymbol{u}_x(2) + \boldsymbol{u}_y(-6) \text{ units}, \qquad \boldsymbol{V}_4 = \boldsymbol{u}_x(7) + \boldsymbol{u}_y(-8) \text{ units},$$

and

$$\boldsymbol{V}_5 = \boldsymbol{u}_x(9) + \boldsymbol{u}_y(1) \text{ units}.$$

Solution: Applying Eq. (3.16), we have

$$V_x = 4 - 3 + 2 + 7 + 9 = 19 \text{ units},$$
$$V_y = -3 + 2 - 6 - 8 + 1 = -14 \text{ units},$$

or

$$\boldsymbol{V} = \boldsymbol{u}_x(19) - \boldsymbol{u}_y(14) \text{ units}.$$

The magnitude of $\boldsymbol{V}$ is $V = \sqrt{(19)^2 + (-14)^2} = 23.55$ units. Its direction is found from $\tan\alpha = V_y/V_x = -0.738$ or $\alpha = -36.4°$, which is the angle $\boldsymbol{V}$ makes with the X-axis.

3.7 Application to Kinematic Problems

As an illustration of how to manipulate vectors in some simple physical situations, we shall now consider a few kinematic examples. The only physical assumption required is that we recognize that velocity is a vector quantity.

Suppose, for example, that we have a boat moving with a velocity $\boldsymbol{V}_B$ relative to the water. If the water is still, $\boldsymbol{V}_B$ is also the velocity of the boat as measured by an observer on the shore. But if the water is flowing at a certain rate, this introduces a drift factor which affects the boat's velocity. Thus the resultant velocity of the boat, as measured by an observer on the shore, is the vector sum of the velocity of the boat $\boldsymbol{V}_B$ relative to the water and the drift velocity $\boldsymbol{V}_C$ due to the water current. That is, $\boldsymbol{V} = \boldsymbol{V}_B + \boldsymbol{V}_C$. A similar logic applies to objects moving through the air, such as airplanes.

EXAMPLE 3.6. A motorboat is heading due north at 15 mi hr^{-1} in a place where the current is 5 mi hr^{-1} in the direction S 70° E. Find the resultant velocity of the boat.

Solution: This problem is solved graphically in Fig. 3–23, where $\boldsymbol{V}_B$ is the boat velocity, $\boldsymbol{V}_C$ the current or drift velocity, and $\boldsymbol{V}$ the resultant velocity obtained from

$$\boldsymbol{V} = \boldsymbol{V}_B + \boldsymbol{V}_C.$$

This is based on the physical fact that the resultant velocity is the vector sum of the velocity of the boat relative to the water plus the drift velocity $\boldsymbol{V}_C$ due to the current.

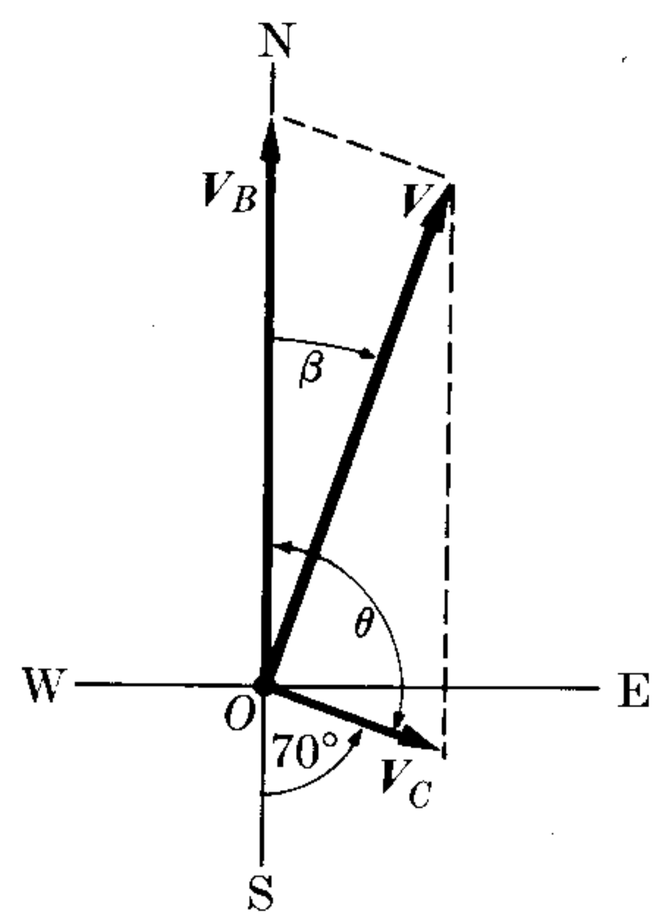

Figure 3–23

Analytically, since $\theta = 110°$, we have

$$V = \sqrt{15^2 + 5^2 + 2(15)(5)\cos 110°} = 14.1 \text{ mi hr}^{-1},$$

which gives the magnitude of the resultant velocity. To obtain the direction, we apply Eq. (3.4),

$$\frac{V}{\sin\theta} = \frac{V_C}{\sin\beta} \qquad \text{or} \qquad \sin\beta = \frac{V_C \sin\theta}{V} = 0.332,$$

giving $\beta = 19.4°$. Thus the resultant motion is in the direction N 19.4° E.

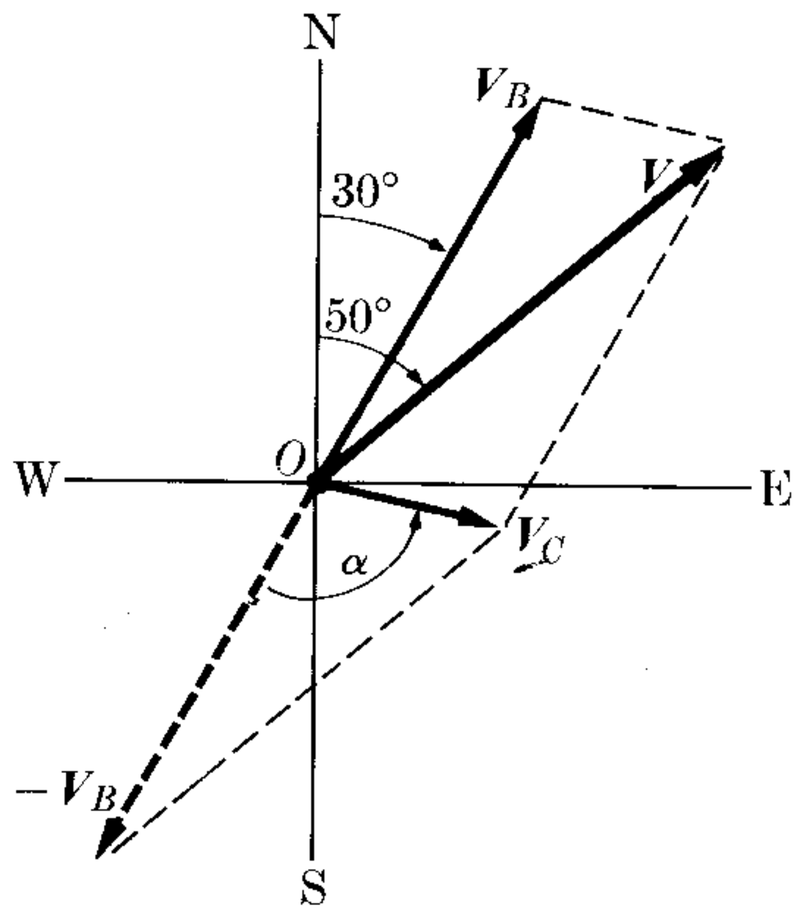

Figure 3–24

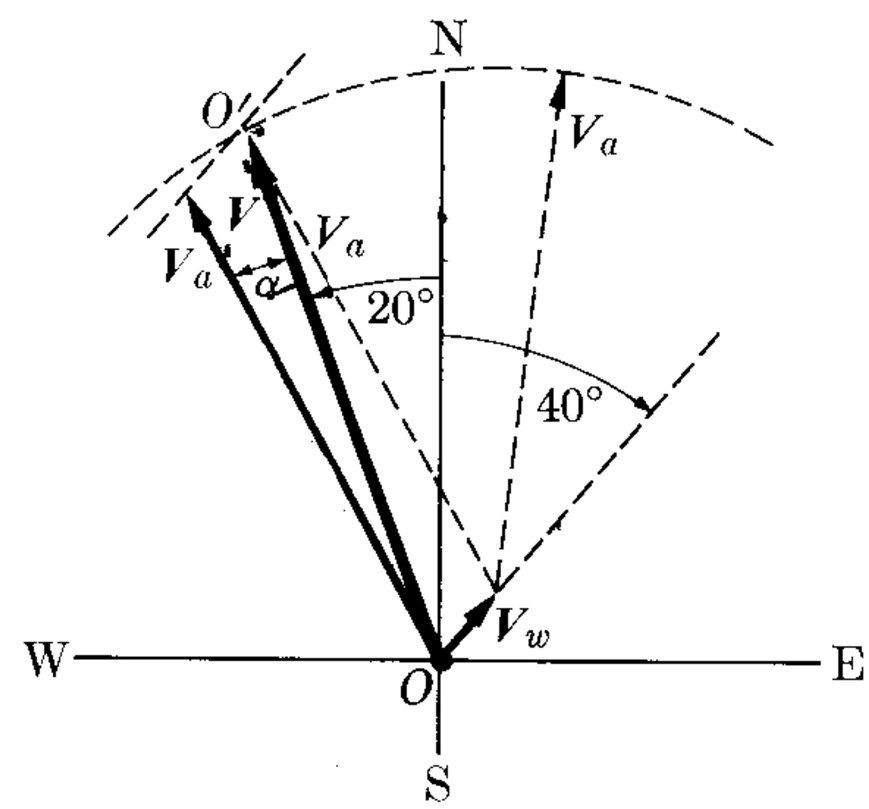

Figure 3–25

EXAMPLE 3.7. A racing boat is heading in the direction N 30° E at 25 mi hr^{-1} in a place where the current is such that the resultant motion is 30 mi hr^{-1} in the direction N 50° E. Find the velocity of the current.

Solution: Again designating the velocity of the boat by $\boldsymbol{V}_B$, the velocity of the current by $\boldsymbol{V}_C$, and the resultant velocity by $\boldsymbol{V}$, we have $\boldsymbol{V} = \boldsymbol{V}_B + \boldsymbol{V}_C$, so that $\boldsymbol{V}_C = \boldsymbol{V} - \boldsymbol{V}_B$. The vectors $\boldsymbol{V}$ and $\boldsymbol{V}_B$ have been drawn in Fig. 3–24, as well as the difference between them, which gives $\boldsymbol{V}_C$. To compute V_C, we note that the angle between $\boldsymbol{V}$ and $-\boldsymbol{V}_B$ is 160°. Thus

$$V_C = \sqrt{30^2 + 25^2 + 2(30)(25)\cos 160°} = 10.8 \text{ mi hr}^{-1}.$$

To obtain the direction of $\boldsymbol{V}_C$, we first obtain the angle α between $\boldsymbol{V}$ and $-\boldsymbol{V}_B$, using Eq. (3.4),

$$\frac{V}{\sin\alpha} = \frac{V_C}{\sin 160°} \qquad \text{or} \qquad \sin\alpha = \frac{V \sin 160°}{V_C} = 0.951,$$

giving $\alpha = 72°$. Therefore the angle with the SN-axis is $72° - 30° = 42°$, and the direction of $\boldsymbol{V}_C$ is S 42° E.

EXAMPLE 3.8. The speed of an airplane in still air is 200 mi hr^{-1}. It is desired to go from O to O', the direction of OO' being N 20° W. The wind is 30 mi hr^{-1} in the direction N 40° E. Find the direction in which the plane is headed and its resultant velocity.

Solution: Let us designate the velocity of the airplane by $\boldsymbol{V}_a$ and that of the wind by $\boldsymbol{V}_w$. The resultant velocity is, as before,

$$\boldsymbol{V} = \boldsymbol{V}_a + \boldsymbol{V}_w.$$

In this case we know that $\boldsymbol{V}$ must have the direction OO'. Thus the vector $\boldsymbol{V}_a$ must be drawn in such a way that, when added to $\boldsymbol{V}_w$, the resultant is along OO'. This has been done in Fig. 3–25 by drawing a circle of radius V_a, with center at the end of $\boldsymbol{V}_w$, and finding the circle's intersection with line OO'.

To proceed analytically, we note that the angle between $\boldsymbol{V}$ and $\boldsymbol{V}_w$ is $20° + 40° = 60°$. Thus, using Eq. (3.4), we obtain

$$\frac{V_a}{\sin 60°} = \frac{V_w}{\sin \alpha} \qquad \text{or} \qquad \sin \alpha = \frac{V_w \sin 60°}{V_a} = 0.130,$$

giving $\alpha = 7.8°$. Therefore the direction of $\boldsymbol{V}_a$ must be N 27.8° W. The angle between $\boldsymbol{V}_a$ and $\boldsymbol{V}_w$ is $\theta = 27.8° + 40° = 67.8°$, and the magnitude of the resultant velocity, using Eq. (3.3), is

$$V = \sqrt{200^2 + 30^2 + 2 \times 200 \times 30 \cos 67.8°} = 204 \text{ mi hr}^{-1}.$$

Is it possible that this problem has two solutions, or no solution at all? We leave the answer to the student.

EXAMPLE 3.9. Find the acceleration of a body that slides along a plane inclined at an angle of θ.

Solution: Let P (Fig. 3–26) be a body sliding down the plane AB without friction. The plane AB is inclined an angle θ. If the plane were not there, the body would fall freely along the vertical with the acceleration due to gravity $g = 9.8 \text{ m s}^{-2}$ (see Example 5.2). The components of g parallel and perpendicular to the plane (called, respectively, a and a') are given by $a = g \sin \theta$ and $a' = g \cos \theta$.

The component a gives the acceleration of the body along the plane.

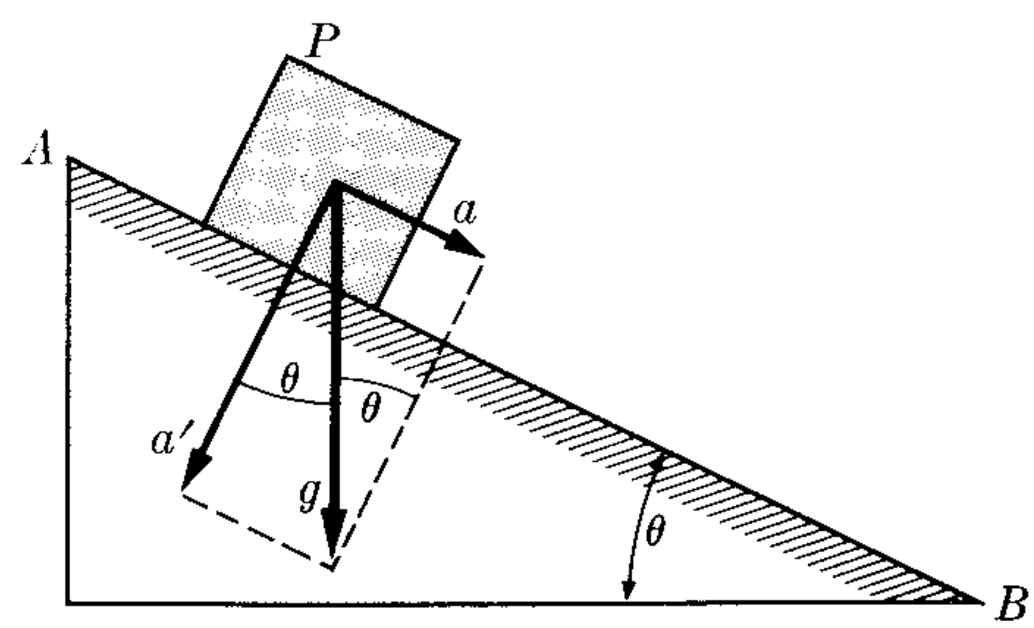

Fig. 3–26. Acceleration along an inclined plane.

3.8 Scalar Product

It is possible to define other operations with vectors besides their addition. One of these operations is the scalar product; another is the vector product.

The *scalar product* of two vectors $\boldsymbol{A}$ and $\boldsymbol{B}$, represented by the symbol $\boldsymbol{A} \cdot \boldsymbol{B}$ (read "A dot B"), is defined as the scalar quantity obtained by finding the product of the magnitudes of $\boldsymbol{A}$ and $\boldsymbol{B}$ and the cosine of the angle between the two vectors,

$$\boldsymbol{A} \cdot \boldsymbol{B} = AB \cos \theta. \tag{3.17}$$

Obviously $\boldsymbol{A} \cdot \boldsymbol{A} = A^2$, since the angle in this case is zero. If the two vectors are

perpendicular ($\theta = \pi/2$), the scalar product is zero. Therefore the condition of perpendicularity is expressed by $\boldsymbol{A} \cdot \boldsymbol{B} = 0$. Because of its definition, the scalar product is commutative; that is, $\boldsymbol{A} \cdot \boldsymbol{B} = \boldsymbol{B} \cdot \boldsymbol{A}$, since $\cos\theta$ is the same in both cases. The scalar product is distributive with respect to the sum; that is,

$$\boldsymbol{C} \cdot (\boldsymbol{A} + \boldsymbol{B}) = \boldsymbol{C} \cdot \boldsymbol{A} + \boldsymbol{C} \cdot \boldsymbol{B}. \tag{3.18}$$

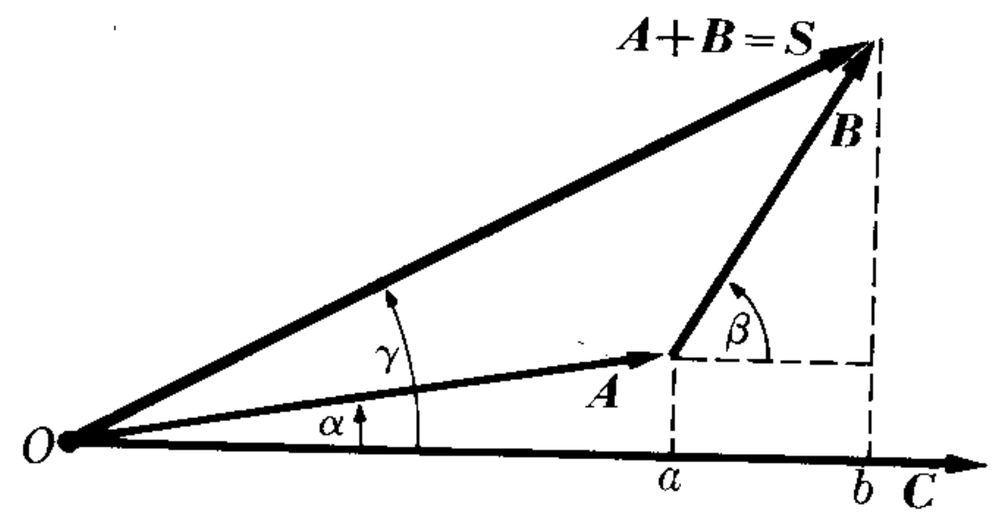

Fig. 3–27. The scalar product is distributive.

To prove the distributive property, we note from Fig. 3–27 that

$$\boldsymbol{C} \cdot (\boldsymbol{A} + \boldsymbol{B}) = |\boldsymbol{C}|\,|\boldsymbol{A} + \boldsymbol{B}| \cos\gamma = C(Ob),$$

because $|\boldsymbol{A} + \boldsymbol{B}| \cos\gamma = Ob$. Similarly, $\boldsymbol{C} \cdot \boldsymbol{A} = CA \cos\alpha = C(Oa)$ and $\boldsymbol{C} \cdot \boldsymbol{B} = CB \cos\beta = C(ab)$. Adding, we obtain

$$\boldsymbol{C} \cdot \boldsymbol{A} + \boldsymbol{C} \cdot \boldsymbol{B} = C(Oa + ab) = C(Ob).$$

Therefore Eq. (3.18) is proved. The scalar products among the unit vectors $\boldsymbol{u}_x$, $\boldsymbol{u}_y$, and $\boldsymbol{u}_z$ are

$$\boldsymbol{u}_x \cdot \boldsymbol{u}_x = \boldsymbol{u}_y \cdot \boldsymbol{u}_y = \boldsymbol{u}_z \cdot \boldsymbol{u}_z = 1, \qquad \boldsymbol{u}_x \cdot \boldsymbol{u}_y = \boldsymbol{u}_y \cdot \boldsymbol{u}_z = \boldsymbol{u}_z \cdot \boldsymbol{u}_x = 0. \tag{3.19}$$

Writing $\boldsymbol{A}$ and $\boldsymbol{B}$ in terms of their rectangular components, in accordance with Eq. (3.12), and applying the distributive law (3.18), we have

$$\begin{aligned}
\boldsymbol{A} \cdot \boldsymbol{B} &= (\boldsymbol{u}_x A_x + \boldsymbol{u}_y A_y + \boldsymbol{u}_z A_z) \cdot (\boldsymbol{u}_x B_x + \boldsymbol{u}_y B_y + \boldsymbol{u}_z B_z) \\
&= (\boldsymbol{u}_x \cdot \boldsymbol{u}_x) A_x B_x + (\boldsymbol{u}_x \cdot \boldsymbol{u}_y) A_x B_y + (\boldsymbol{u}_x \cdot \boldsymbol{u}_z) A_x B_z \\
&\quad + (\boldsymbol{u}_y \cdot \boldsymbol{u}_x) A_y B_x + (\boldsymbol{u}_y \cdot \boldsymbol{u}_y) A_y B_y + (\boldsymbol{u}_y \cdot \boldsymbol{u}_z) A_y B_z \\
&\quad + (\boldsymbol{u}_z \cdot \boldsymbol{u}_x) A_z B_x + (\boldsymbol{u}_z \cdot \boldsymbol{u}_y) A_z B_y + (\boldsymbol{u}_z \cdot \boldsymbol{u}_z) A_z B_z.
\end{aligned}$$

Applying relations (3.19), we finally obtain

$$\boldsymbol{A} \cdot \boldsymbol{B} = A_x B_x + A_y B_y + A_z B_z, \tag{3.20}$$

a result which has many applications. Note that

$$A^2 = \boldsymbol{A} \cdot \boldsymbol{A} = A_x^2 + A_y^2 + A_z^2,$$

in agreement with Eq. (3.11).

We can apply the properties of the scalar product to derive quite easily the formula (3.3) for the sum of two vectors. From $\boldsymbol{V} = \boldsymbol{V}_1 + \boldsymbol{V}_2$, we have

$$\begin{aligned}
V^2 &= (\boldsymbol{V}_1 + \boldsymbol{V}_2) \cdot (\boldsymbol{V}_1 + \boldsymbol{V}_2) = V_1^2 + V_2^2 + 2\boldsymbol{V}_1 \cdot \boldsymbol{V}_2 \\
&= V_1^2 + V_2^2 + 2V_1 V_2 \cos\theta.
\end{aligned}$$

This result can be extended without difficulty to any number of vectors. Suppose that $\boldsymbol{V} = \boldsymbol{V}_1 + \boldsymbol{V}_2 + \boldsymbol{V}_3 + \cdots = \sum_i \boldsymbol{V}_i$. Then

$$\begin{aligned} V^2 &= (\boldsymbol{V}_1 + \boldsymbol{V}_2 + \boldsymbol{V}_3 + \cdots)^2 \\ &= V_1^2 + V_2^2 + V_3^2 + \cdots + 2\boldsymbol{V}_1 \cdot \boldsymbol{V}_2 + 2\boldsymbol{V}_1 \cdot \boldsymbol{V}_3 \\ &\quad + \cdots + 2\boldsymbol{V}_2 \cdot \boldsymbol{V}_3 + \cdots, \end{aligned}$$

or, in a compact notation,

$$V^2 = \sum_{\substack{\text{all}\\ \text{vectors}}} V_i^2 + 2\sum_{\substack{\text{all}\\ \text{pairs}}} \boldsymbol{V}_i \cdot \boldsymbol{V}_j.$$

EXAMPLE 3.10. Find the angle between the vectors $\boldsymbol{A} = 2\boldsymbol{u}_x + 3\boldsymbol{u}_y - \boldsymbol{u}_z$ and $\boldsymbol{B} = -\boldsymbol{u}_x + \boldsymbol{u}_y + 2\boldsymbol{u}_z$.

Solution: We first compute their scalar product, using Eq. (3.20):

$$\boldsymbol{A} \cdot \boldsymbol{B} = 2(-1) + 3(1) + (-1)2 = -1.$$

Also

$$A = \sqrt{4 + 9 + 1} = \sqrt{14} = 3.74 \text{ units}$$

and

$$B = \sqrt{1 + 1 + 4} = \sqrt{6} = 2.45 \text{ units}.$$

Thus from Eq. (3.17), we have

$$\cos\theta = \frac{\boldsymbol{A} \cdot \boldsymbol{B}}{AB} = -\frac{1}{9.17} = -0.109,$$

corresponding to $\theta = 96.3°$.

EXAMPLE 3.11. Express the equation of a plane perpendicular to a vector $\boldsymbol{V} = \boldsymbol{u}_x A + \boldsymbol{u}_y B + \boldsymbol{u}_z C$ and passing through a point P_0.

Solution: Designating the position vector of P_0 by $\boldsymbol{r}_0$ (Fig. 3–28), and the position vector of any point P of the plane by $\boldsymbol{r}$, we see that the vector

$$\overrightarrow{P_0P} = \boldsymbol{r} - \boldsymbol{r}_0$$

must be perpendicular to $\boldsymbol{V}$. Thus

$$\boldsymbol{V} \cdot (\boldsymbol{r} - \boldsymbol{r}_0) = 0$$

is the equation that must be satisfied by the position vectors $\boldsymbol{r}$ of all the points on the plane. Using Eq. (3.20), we may write

$$A(x - x_0) + B(y - y_0) + C(z - z_0) = 0,$$

which is the form in which the equation of a plane perpendicular to a given line is usually written in analytic geometry.

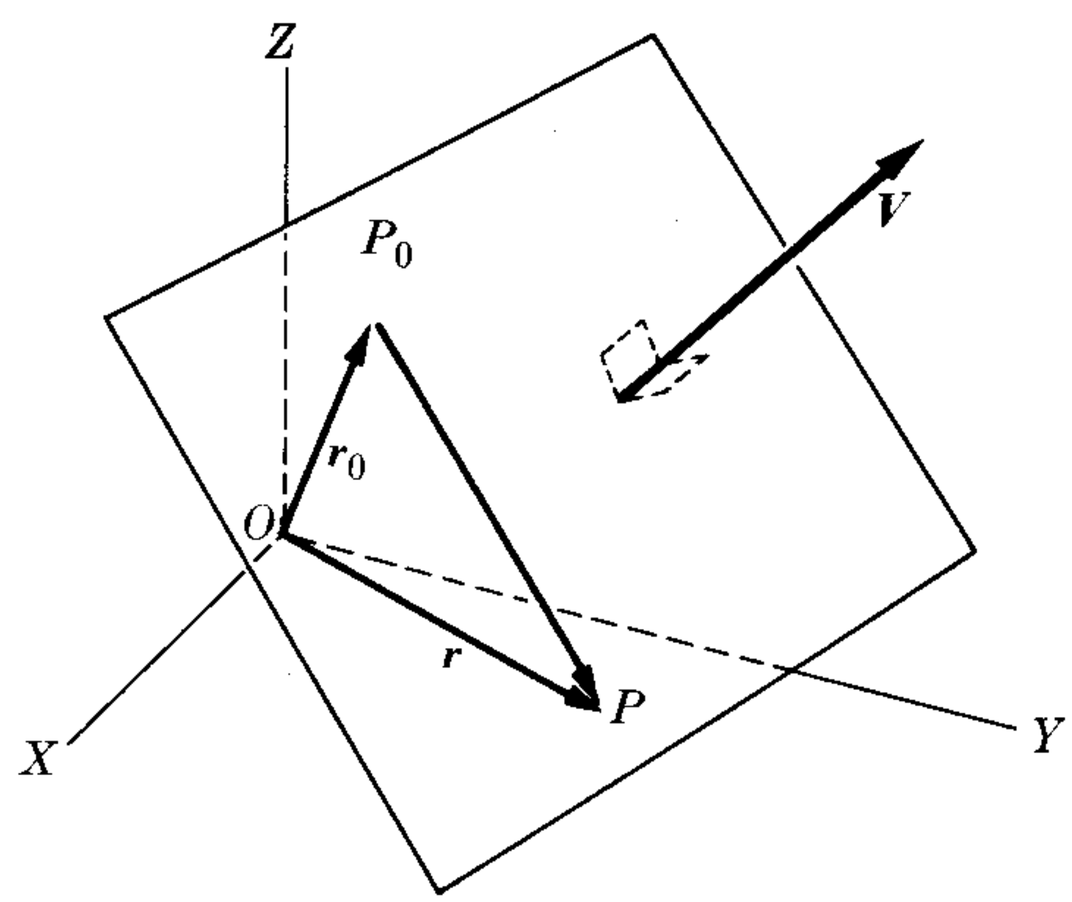

Fig. 3–28. Vector equation of a plane.

3.9 Vector Product

The vector product of two vectors $\boldsymbol{A}$ and $\boldsymbol{B}$, represented by the symbol $\boldsymbol{A} \times \boldsymbol{B}$ (read "A cross B"), is defined as the vector perpendicular to the plane determined by $\boldsymbol{A}$ and $\boldsymbol{B}$ and in the direction of advance of a right-handed screw rotated from $\boldsymbol{A}$ to $\boldsymbol{B}$ (Fig. 3–29). A right-handed screw is one that, if one's right hand is placed as shown in Fig. 3–29, with the fingers pointing in the direction of rotation, the screw advances in the direction of the thumb. Most ordinary screws are right-handed.

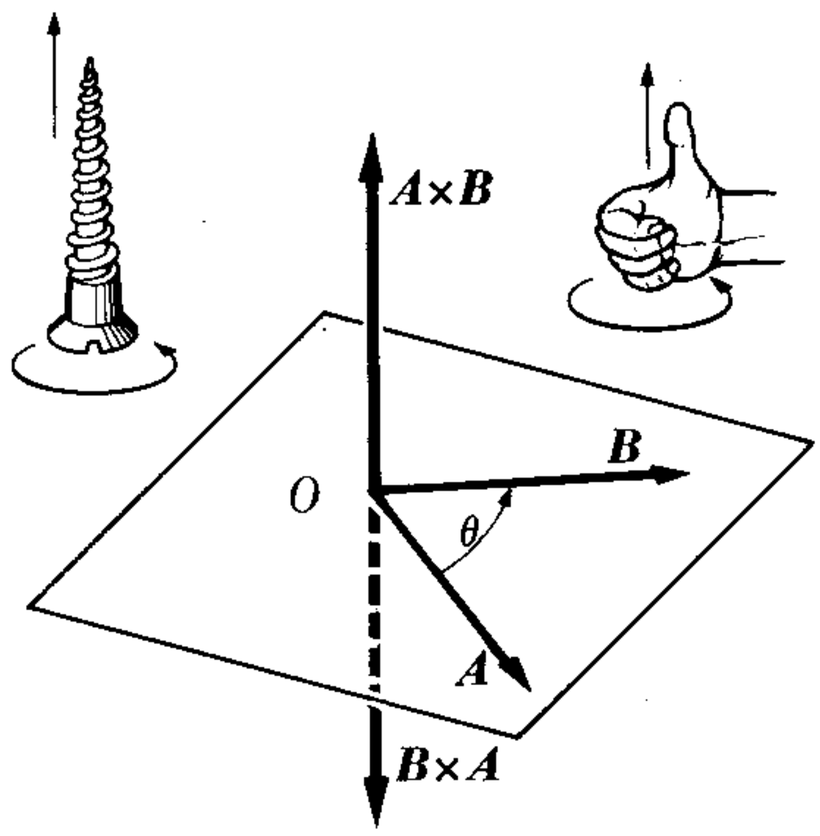

Fig. 3–29. Vector relations in the vector product.

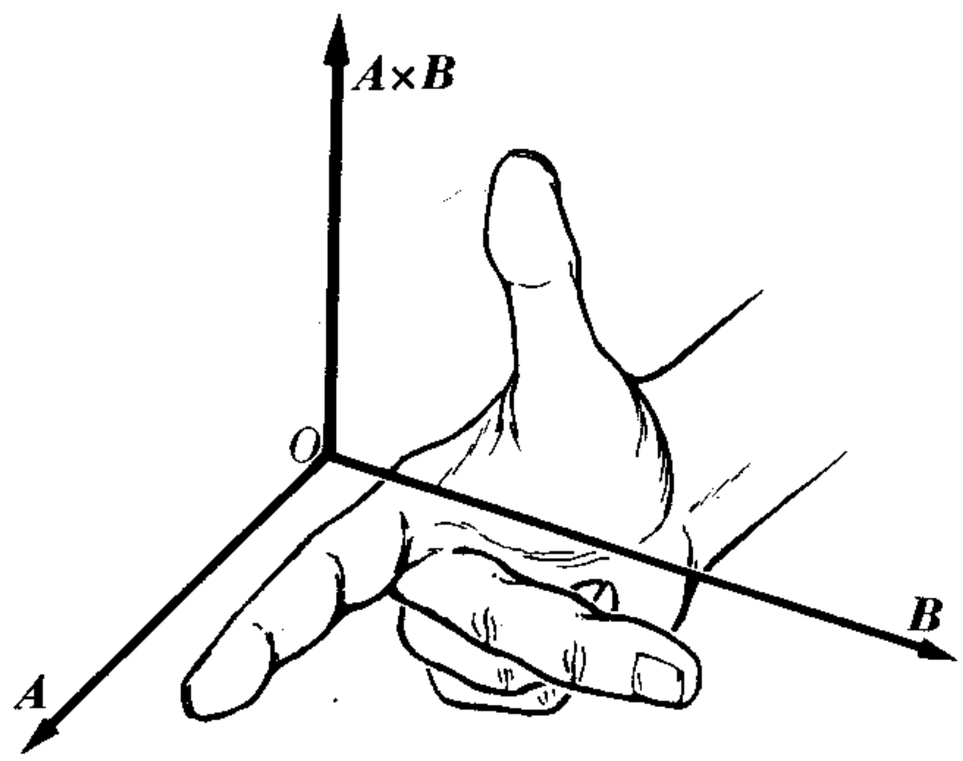

Fig. 3–30. Right-hand rule for the vector product.

The magnitude of the vector product $\boldsymbol{A} \times \boldsymbol{B}$ is given by

$$|\boldsymbol{A} \times \boldsymbol{B}| = AB \sin \theta. \tag{3.21}$$

Another simple rule useful in establishing the direction of $\boldsymbol{A} \times \boldsymbol{B}$ is as follows: Place the thumb, forefinger, and middle finger of the right hand in the position shown in Fig. 3–30. If the forefinger and the middle finger point in the directions of $\boldsymbol{A}$ and $\boldsymbol{B}$, respectively, the thumb points in the direction of $\boldsymbol{A} \times \boldsymbol{B}$. Actually, the rule is more general, and the vectors $\boldsymbol{A}$, $\boldsymbol{B}$, and $\boldsymbol{A} \times \boldsymbol{B}$ can be sequentially assigned to the fingers by starting at any finger, so long as the following *cyclic* order is maintained.

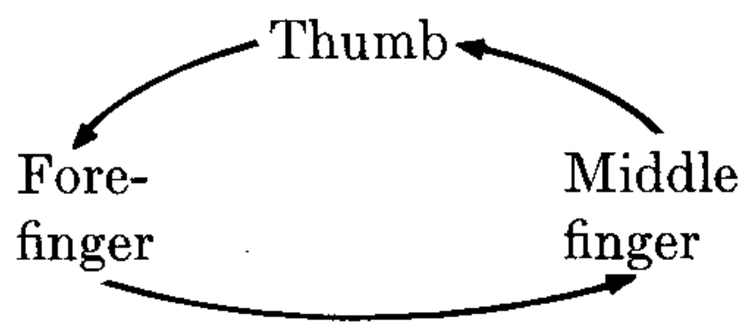

From the definition of the vector product, we conclude that

$$\boldsymbol{A} \times \boldsymbol{B} = -\boldsymbol{B} \times \boldsymbol{A}, \tag{3.22}$$

because the sense of rotation of the screw is reversed when the order of the vectors is changed, so that the vector product is anticommutative. If two vectors are

parallel, $\theta = 0°$, $\sin\theta = 0$, and the vector product is zero. Therefore the condition of parallelism is expressed by $\boldsymbol{A} \times \boldsymbol{B} = 0$. Obviously $\boldsymbol{A} \times \boldsymbol{A} = 0$.

Note that the magnitude of the vector product is equal to the area of the parallelogram formed by the two vectors, or is equal to twice the area of the triangle made with their resultant. This can be seen as follows (Fig. 3–31). The magnitude of $\boldsymbol{A} \times \boldsymbol{B}$ is $AB\sin\theta$. But $B\sin\theta = h$, where h is the height of the parallelogram formed with $\boldsymbol{A}$ and $\boldsymbol{B}$ as sides. Thus

$$|\boldsymbol{A} \times \boldsymbol{B}| = Ah = \text{area of parallelogram.}$$

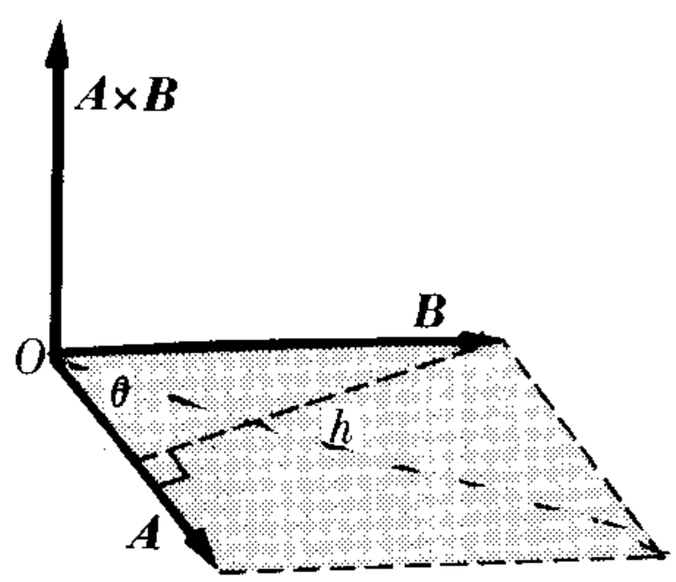

Fig. 3–31. The vector product is equivalent to the area of the parallelogram defined by the two vectors.

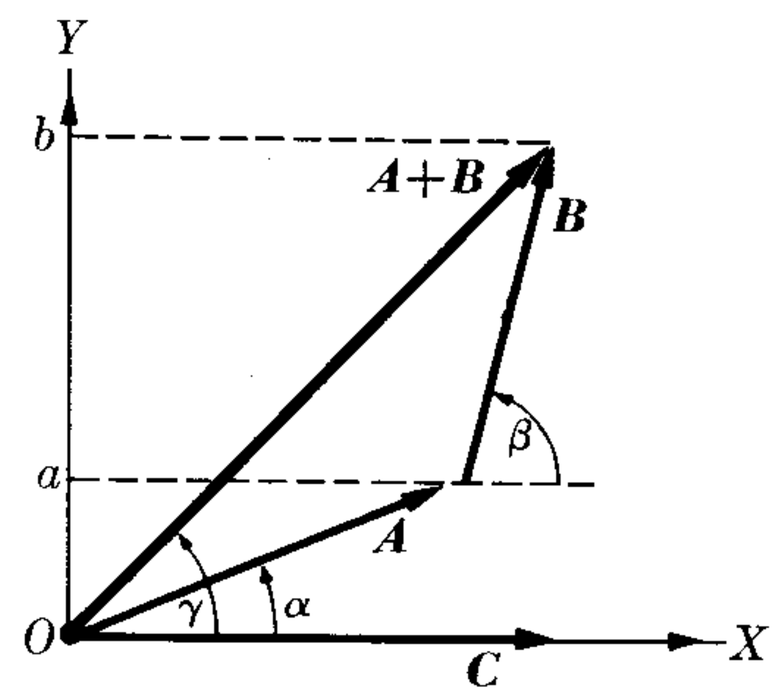

Fig. 3–32. The vector product is distributive.

The vector product is distributive relative to the sum; that is,

$$\boldsymbol{C} \times (\boldsymbol{A} + \boldsymbol{B}) = \boldsymbol{C} \times \boldsymbol{A} + \boldsymbol{C} \times \boldsymbol{B}. \tag{3.23}$$

The proof when the three vectors are in a plane is very simple. In this case (Fig. 3–32) the three vector products appearing in Eq. (3.23) are perpendicular to the page of the book, and it is only necessary to verify that relation (3.23) holds for the magnitudes. But

$$|\boldsymbol{C} \times (\boldsymbol{A} + \boldsymbol{B})| = |\boldsymbol{C}||\boldsymbol{A} + \boldsymbol{B}|\sin\gamma = C(Ob).$$

Similarly,

$$|\boldsymbol{C} \times \boldsymbol{A}| = CA\sin\alpha = C(Oa); \qquad |\boldsymbol{C} \times \boldsymbol{B}| = CB\sin\beta = C(ab).$$

When we add, we obtain

$$|\boldsymbol{C} \times \boldsymbol{A}| + |\boldsymbol{C} \times \boldsymbol{B}| = C(Oa + ab) = C(Ob).$$

Therefore Eq. (3.23) is proved both in magnitude and direction. The proof in the general case of three vectors in space is similar, but somewhat more complex.*

* For a general proof, see G. B. Thomas, *Calculus and Analytic Geometry*, third edition; Reading, Mass.: Addison-Wesley, 1962, Section 13–4.

The vector products among the unit vectors, $\boldsymbol{u}_x$, $\boldsymbol{u}_y$, $\boldsymbol{u}_z$ are

$$\begin{aligned}
\boldsymbol{u}_x \times \boldsymbol{u}_y &= -\boldsymbol{u}_y \times \boldsymbol{u}_x = \boldsymbol{u}_z, \\
\boldsymbol{u}_y \times \boldsymbol{u}_z &= -\boldsymbol{u}_z \times \boldsymbol{u}_y = \boldsymbol{u}_x, \\
\boldsymbol{u}_z \times \boldsymbol{u}_x &= -\boldsymbol{u}_x \times \boldsymbol{u}_z = \boldsymbol{u}_y, \\
\boldsymbol{u}_x \times \boldsymbol{u}_x &= \boldsymbol{u}_y \times \boldsymbol{u}_y = \boldsymbol{u}_z \times \boldsymbol{u}_z = 0.
\end{aligned} \tag{3.24}$$

Writing $\boldsymbol{A}$ and $\boldsymbol{B}$ in terms of their rectangular components, according to Eq. (3.12), and applying the distributive law (3.23), we have

$$\begin{aligned}
\boldsymbol{A} \times \boldsymbol{B} &= (\boldsymbol{u}_x A_x + \boldsymbol{u}_y A_y + \boldsymbol{u}_z A_z) \times (\boldsymbol{u}_x B_x + \boldsymbol{u}_y B_y + \boldsymbol{u}_z B_z) \\
&= (\boldsymbol{u}_x \times \boldsymbol{u}_x) A_x B_x + (\boldsymbol{u}_x \times \boldsymbol{u}_y) A_x B_y + (\boldsymbol{u}_x \times \boldsymbol{u}_z) A_x B_z \\
&\quad + (\boldsymbol{u}_y \times \boldsymbol{u}_x) A_y B_x + (\boldsymbol{u}_y \times \boldsymbol{u}_y) A_y B_y + (\boldsymbol{u}_y \times \boldsymbol{u}_z) A_y B_z \\
&\quad + (\boldsymbol{u}_z \times \boldsymbol{u}_x) A_z B_x + (\boldsymbol{u}_z \times \boldsymbol{u}_y) A_z B_y + (\boldsymbol{u}_z \times \boldsymbol{u}_z) A_z B_z.
\end{aligned}$$

Applying relations (3.24), we obtain finally

$$\begin{aligned}
\boldsymbol{A} \times \boldsymbol{B} = \boldsymbol{u}_x(A_y B_z - A_z B_y) &+ \boldsymbol{u}_y(A_z B_x - A_x B_z) \\
&+ \boldsymbol{u}_z(A_x B_y - A_y B_x).
\end{aligned} \tag{3.25}$$

Equation (3.25) may also be written in the more compact determinantal form,

$$\boldsymbol{A} \times \boldsymbol{B} = \begin{vmatrix} \boldsymbol{u}_x & \boldsymbol{u}_y & \boldsymbol{u}_z \\ A_x & A_y & A_z \\ B_x & B_y & B_z \end{vmatrix}. \tag{3.26}$$

Note on determinants. A determinant is a convenient notation for arranging quantities that have to be combined in a certain symmetric way. A second-order determinant is a 2×2 array of numbers evaluated according to the rule:

$$\begin{vmatrix} a_1 & a_2 \\ b_1 & b_2 \end{vmatrix} = a_1 b_2 - a_2 b_1.$$

Note that what we do is to multiply along the diagonals and subtract. A third-order determinant is a 3×3 array of numbers evaluated according to the rule:

$$\begin{aligned}
\begin{vmatrix} a_1 & a_2 & a_3 \\ b_1 & b_2 & b_3 \\ c_1 & c_2 & c_3 \end{vmatrix} &= a_1 \begin{vmatrix} b_2 & b_3 \\ c_2 & c_3 \end{vmatrix} + a_2 \begin{vmatrix} b_3 & b_1 \\ c_3 & c_1 \end{vmatrix} + a_3 \begin{vmatrix} b_1 & b_2 \\ c_1 & c_2 \end{vmatrix} \\
&= a_1(b_2 c_3 - b_3 c_2) + a_2(b_3 c_1 - b_1 c_3) + a_3(b_1 c_2 - b_2 c_1).
\end{aligned}$$

Note the order in which the columns appear in each term. The student may verify that by applying this rule to Eq. (3.26), he will obtain Eq. (3.25). For more information on determinants, the student should consult G. B. Thomas, *Calculus and Analytic Geometry*, third edition; Reading, Mass.: Addison-Wesley, Sections 8–1 and 8–2.

EXAMPLE 3.12. Find the area of the parallelogram determined by the vectors

$$\boldsymbol{A} = 2\boldsymbol{u}_x + 3\boldsymbol{u}_y - \boldsymbol{u}_z \quad \text{and} \quad \boldsymbol{B} = -\boldsymbol{u}_x + \boldsymbol{u}_y + 2\boldsymbol{u}_z.$$

Solution: First we compute the vector product of $\boldsymbol{A}$ and $\boldsymbol{B}$, using Eq. (3.26):

$$\boldsymbol{A} \times \boldsymbol{B} = \begin{vmatrix} \boldsymbol{u}_x & \boldsymbol{u}_y & \boldsymbol{u}_z \\ 2 & 3 & -1 \\ -1 & 1 & 2 \end{vmatrix} = 7\boldsymbol{u}_x - 3\boldsymbol{u}_y + 5\boldsymbol{u}_z.$$

Then the area of the parallelogram is just the magnitude of $\boldsymbol{A} \times \boldsymbol{B}$, or

$$\text{Area} = |\boldsymbol{A} \times \boldsymbol{B}| = \sqrt{49 + 9 + 25} = 9.110 \text{ units.}$$

EXAMPLE 3.13. Find the distance from point P (4, −1, 5) to the straight line passing through points P_1 (−1, 2, 0) and P_2 (1, 1, 4).

Solution: The geometry of the problem has been illustrated in Fig. 3–33. It is seen that $d = P_1P \sin\theta$. We introduce the vectors

$$\boldsymbol{A} = \overrightarrow{P_1P} \quad \text{and} \quad \boldsymbol{B} = \overrightarrow{P_1P_2},$$

so that, using Eq. (3.14), we obtain

$$\boldsymbol{A} = \overrightarrow{P_1P} = 5\boldsymbol{u}_x - 3\boldsymbol{u}_y + 5\boldsymbol{u}_z,$$
$$\boldsymbol{B} = \overrightarrow{P_1P_2} = 2\boldsymbol{u}_x - \boldsymbol{u}_y + 4\boldsymbol{u}_z.$$

We then see that

$$d = A \sin\theta = \frac{AB \sin\theta}{B} = \frac{|\boldsymbol{A} \times \boldsymbol{B}|}{B}.$$

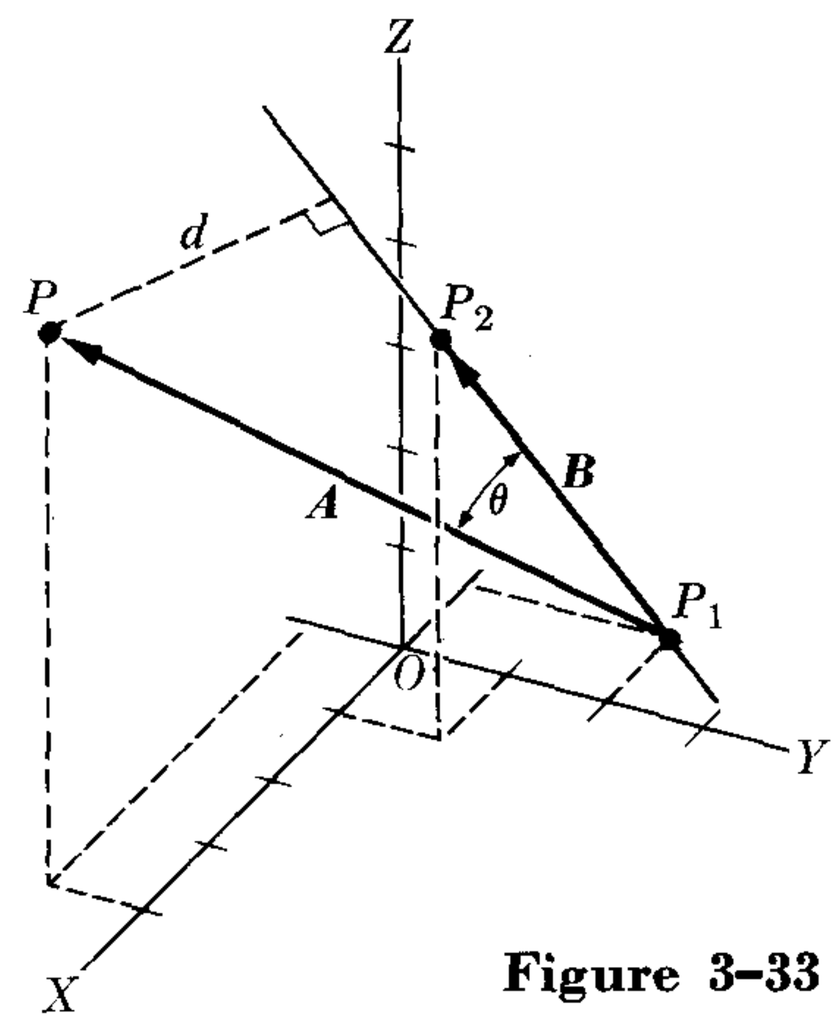

Figure 3–33

Thus, using Eq. (3.26) to compute the vector product of $\boldsymbol{A}$ and $\boldsymbol{B}$, we get

$$\boldsymbol{A} \times \boldsymbol{B} = \begin{vmatrix} \boldsymbol{u}_x & \boldsymbol{u}_y & \boldsymbol{u}_z \\ 5 & -3 & 5 \\ 2 & -1 & 4 \end{vmatrix} = -7\boldsymbol{u}_x - 10\boldsymbol{u}_y + 1\boldsymbol{u}_z.$$

Then $|\boldsymbol{A} \times \boldsymbol{B}| = \sqrt{49 + 100 + 1} = \sqrt{150} = 12.25$, and since $B = \sqrt{4 + 1 + 16} = \sqrt{21} = 4.582$, we obtain

$$d = \frac{|\boldsymbol{A} \times \boldsymbol{B}|}{B} = 2.674.$$

3.10 Vector Representation of an Area

In the discussion related to Fig. 3–31, we indicated that the vector product $\boldsymbol{A} \times \boldsymbol{B}$ is equal in magnitude to the area of the parallelogram whose sides are defined by vectors $\boldsymbol{A}$ and $\boldsymbol{B}$. This suggests the possibility of considering associating a vector with any surface.

Let us consider a *plane* surface S (Fig. 3–34) whose periphery L is oriented as indicated by the arrow. We shall adopt the convention of representing it by a vector $\boldsymbol{S}$, whose magnitude is equal to the area of the surface and whose direction is perpendicular to the surface. The sense of the vector is the direction in which a right-handed screw advances when its head is rotated in the same sense as the periphery is oriented.

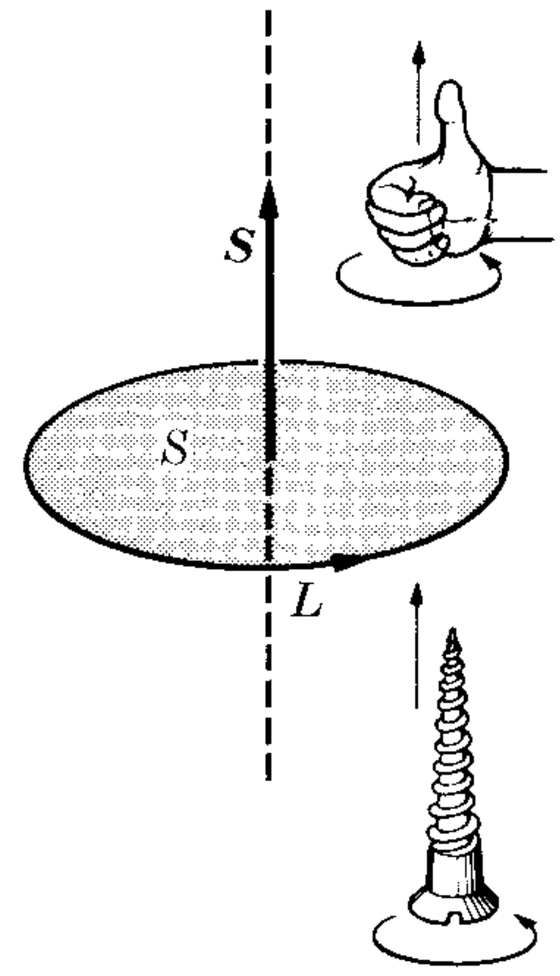

Fig. 3–34. Vector representation of a surface.

The components of $\boldsymbol{S}$ have a simple geometric meaning. Suppose that the plane of surface S makes an angle θ with the XY-plane (Fig. 3–35). The projection of S on the XY-plane is $S \cos \theta$, as is well known from solid geometry. But the normal to the plane of the surface also makes an angle θ with the Z-axis. Thus the Z-component of the vector $\boldsymbol{S}$ is $S_z = S \cos \theta$. Therefore we conclude that the components of $\boldsymbol{S}$ along the coordinate axes are equal to the projections of the surface on the three coordinate planes.

If the surface is *not* plane, it may always be divided into a large number of very small areas (Fig. 3–36) each one practically plane, and each represented by a vector $\boldsymbol{S}_i$. Thus the vector representing the curved surface is

$$\boldsymbol{S} = \boldsymbol{S}_1 + \boldsymbol{S}_2 + \boldsymbol{S}_3 + \cdots = \textstyle\sum_i \boldsymbol{S}_i.$$

In this case the magnitude of $\boldsymbol{S}$ is not equal to the area of the curved surface, which is $\sum_i S_i$; however, the magnitudes of its three components are equal to the areas of the projections of the surface on the three coordinate planes.

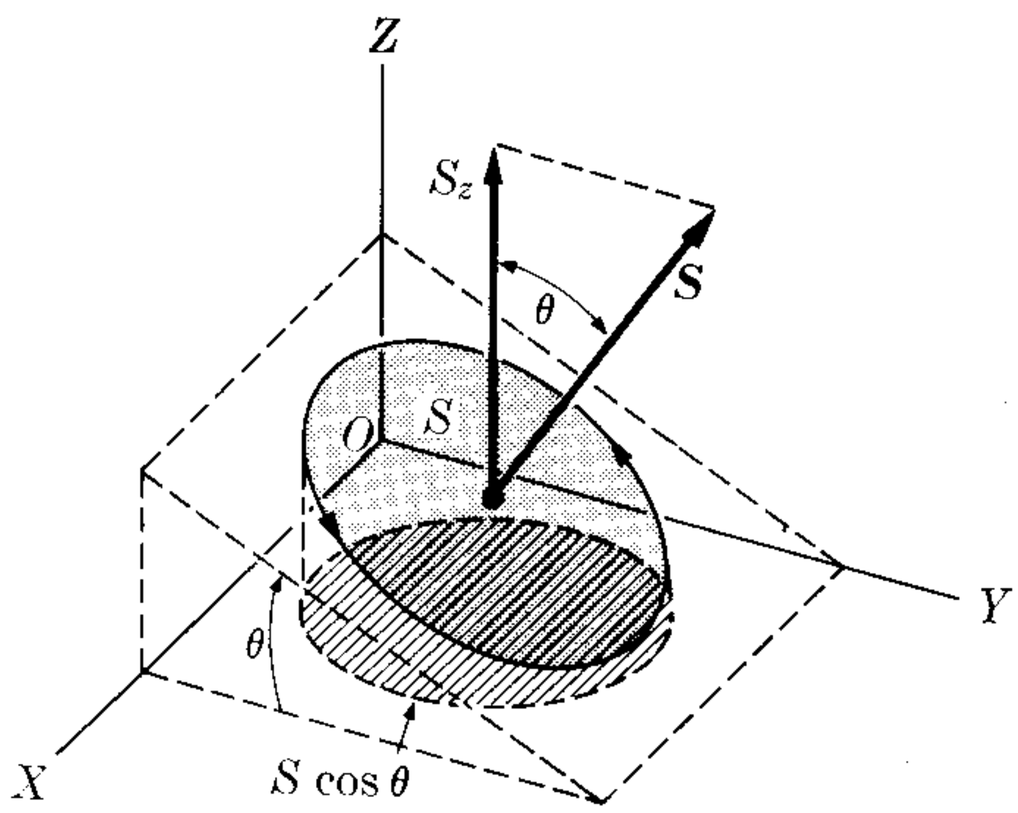

Fig. 3–35. Projection of a surface on a plane.

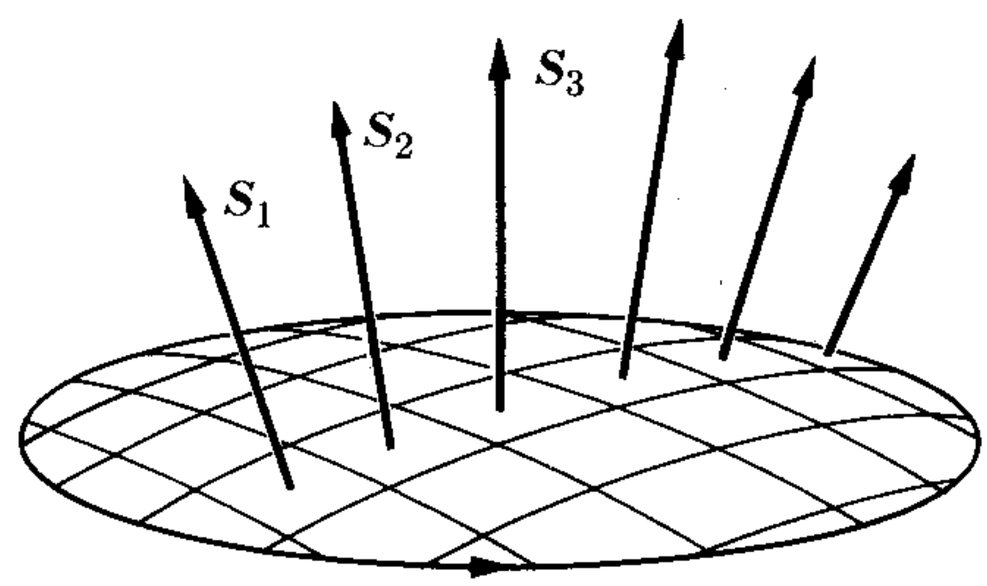

Fig. 3–36. Vector addition of surfaces.

For example, let us consider a plot of land, of which part is horizontal and part on the slope of a hill, as indicated in Fig. 3–37. If S_1 and S_2 are the areas of each portion, the total area of land usable for farming is $S_1 + S_2$. However, if the plot is going to be used for a building, the actual usable land is the projection of the plot on a horizontal plane, or $S_1 + S_2 \cos \theta$. The vector $\boldsymbol{S} = \boldsymbol{S}_1 + \boldsymbol{S}_2$, represent-

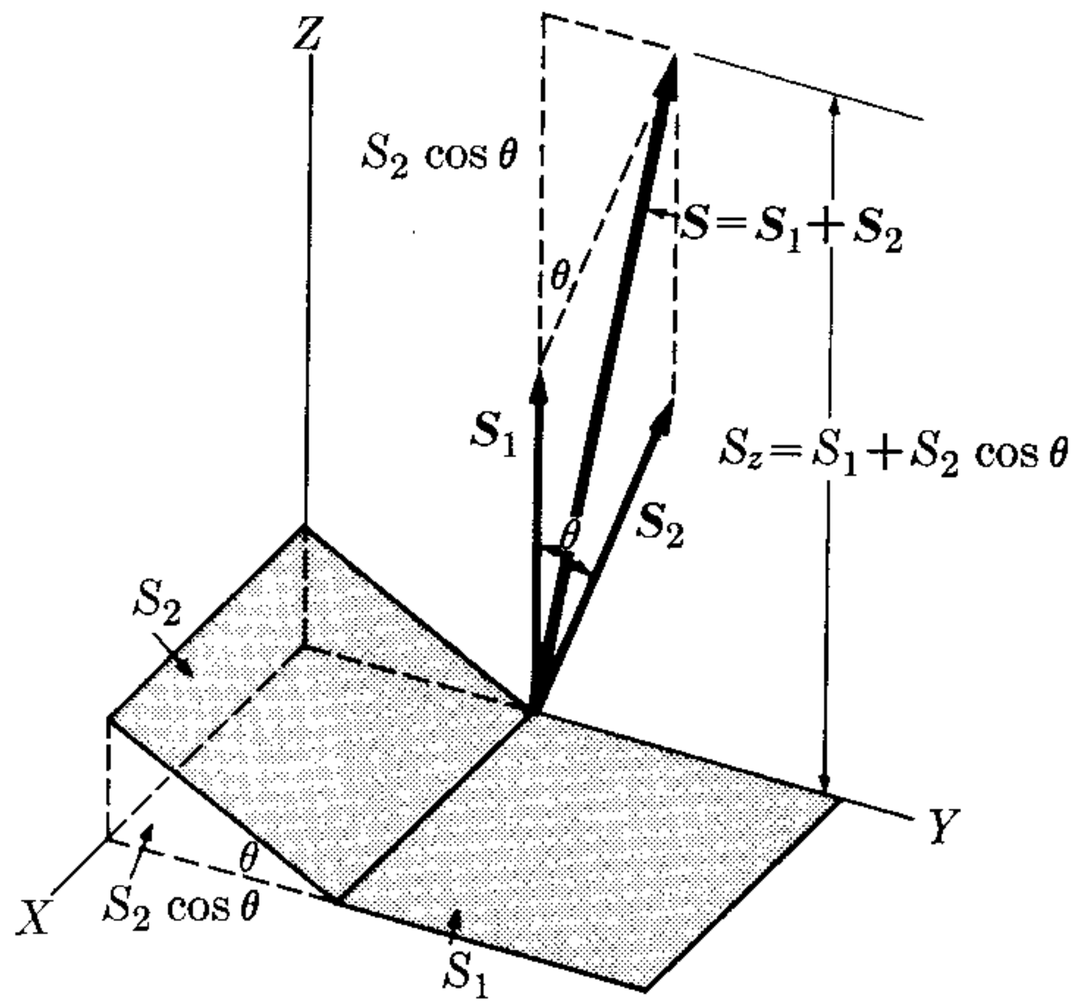

Figure 3–37

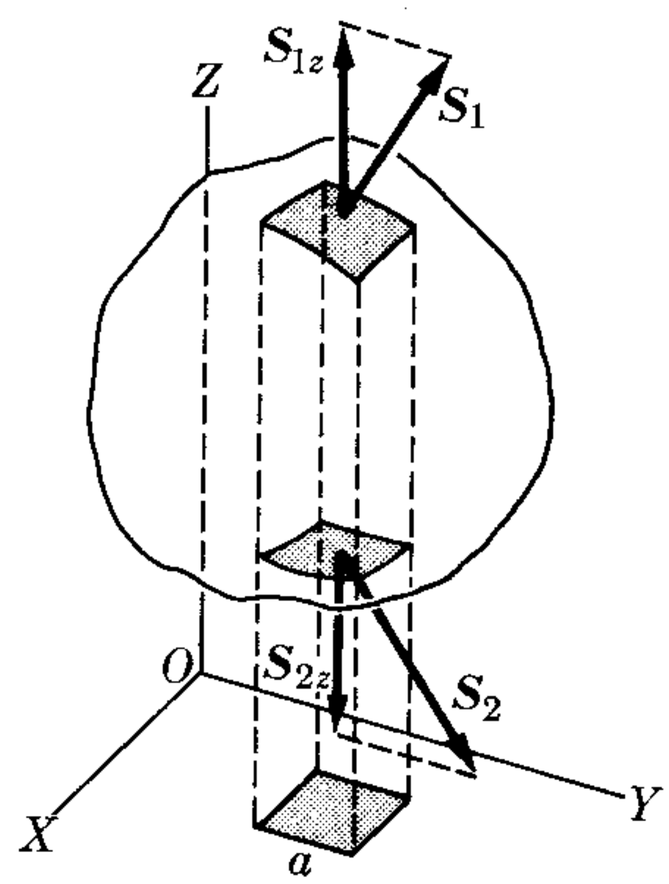

Fig. 3–38. A closed surface is represented by a null vector.

ing the whole plot, has a magnitude $S = \sqrt{S_1^2 + S_2^2 + 2S_1S_2 \cos\theta}$, which is smaller than $S_1 + S_2$. But its component along the vertical Z-axis is $S_z = S_1 + S_2 \cos\theta$, in agreement with the projection of the plot on the horizontal XY-plane.

Finally, consider a *closed surface*, as shown in Fig. 3–38. Divide this surface into small plane surfaces, each one represented by a vector $\boldsymbol{S}_i$ in the *outward* direction. We can always associate the small areas in pairs such that their combined projection is zero. For example, in Fig. 3–38, the two areas S_1 and S_2 have the same projection in the XY-plane, but with opposite signs. Thus $S_{1z} = a$ and $S_{2z} = -a$. Adding all such pairs we get $S_z = \sum_i S_{iz} = 0$. By the same argument we see that the same result holds for the components of $\boldsymbol{S} = \sum_i \boldsymbol{S}_i$ along the other two axes. Therefore, $\boldsymbol{S} = 0$, or *the vector representing a closed surface is zero.*

References

1. *Vectors, A Programmed Text for Introductory Physics.* New York: Appleton-Century-Crofts, 1962
2. *Elementary Vectors,* by E. Wolstenholme. New York: Pergamon Press, 1964
3. *Mechanics* (second edition), by K. Symon. Reading, Mass.: Addison-Wesley, 1964, Sections 3–1 and 3–3
4. *Physical Mechanics* (third edition), by R. Lindsay. Princeton, N.J.: Van Nostrand, 1963, Section 1–3
5. *Vector Mechanics,* by D. Christie. New York: McGraw-Hill, 1964
6. *Introduction to Engineering Mechanics,* by J. Huddleston. Reading, Mass.: Addison-Wesley, 1961, Chapters 2 and 7
7. *The Feynman Lectures on Physics,* Volume I, by R. Feynman, R. Leighton, and M. Sands. Reading, Mass.: Addison-Wesley, 1963, Chapter 11

Problems

3.1 Two vectors, 6 and 9 units long, form an angle of (a) 0°, (b) 60°, (c) 90°, (d) 150°, and (e) 180°. Find the magnitude and direction of their resultant with respect to the shorter vector.

3.2 Find the angle between two vectors, 10 and 15 units long, when their resultant is (a) 20 units long and (b) 12 units long. Draw the appropriate figure.

3.3 Two vectors form an angle of 110°. One of the vectors is 20 units long and makes an angle of 40° with the vector sum of the two. Find the magnitude of the second vector and of the vector sum.

3.4 The resultant vector of two other vectors is 10 units long and forms an angle of 35° with one of the component vectors, which is 12 units long. Find the magnitude of the other vector and the angle between the two.

3.5 Find the angle between two vectors, 8 and 10 units long, when the resultant vector makes an angle of 50° with the larger vector. Also calculate the magnitude of the resultant vector.

3.6 The resultant of two vectors is 30 units long and forms angles of 25° and 50° with them. Find the magnitude of the two vectors.

3.7 Two vectors, 10 and 8 units long, form an angle of (a) 60°, (b) 90°, and (c) 120°. Find the magnitude of the *difference* and the angle with respect to the larger vector.

3.8 Find the rectangular components of a vector 15 units long when it forms an angle, with respect to the positive X-axis, of (a) 50°, (b) 130°, (c) 230°, and (d) 310°.

3.9 Three vectors in a plane are, respectively, 6, 5, and 4 units long. The first and second form an angle of 50°, while the second and third form an angle of 75°. Find the magnitude and direction of the resultant with respect to the larger vector.

3.10 Given four coplanar vectors 8, 12, 10, and 6 units long, respectively; the last three make angles with the first of 70°, 150°, and 200°, respectively. Find the magnitude and direction of the resultant vector.

3.11 An airplane is supposed to travel from A in a direction due north to B, and then return to A. The distance between A and B is L. The air speed of the plane is v and the wind velocity is v'. (a) Show that the time for the round trip in still air, $v' = 0$, is $t_a = 2L/v$. (b) Show that the time for the round trip when the wind is directed due east (or west) is

$$t_b = t_a/\sqrt{1 - (v'^2/v^2)}.$$

(c) Show that the time for the round trip when the wind is directed due north (or south) is $t_c = t_a/1 - (v'^2/v^2)$. (d) What is the feasibility of trips (b) or (c) when $v' = v$? For a given v', which time is greater, t_b or t_c?

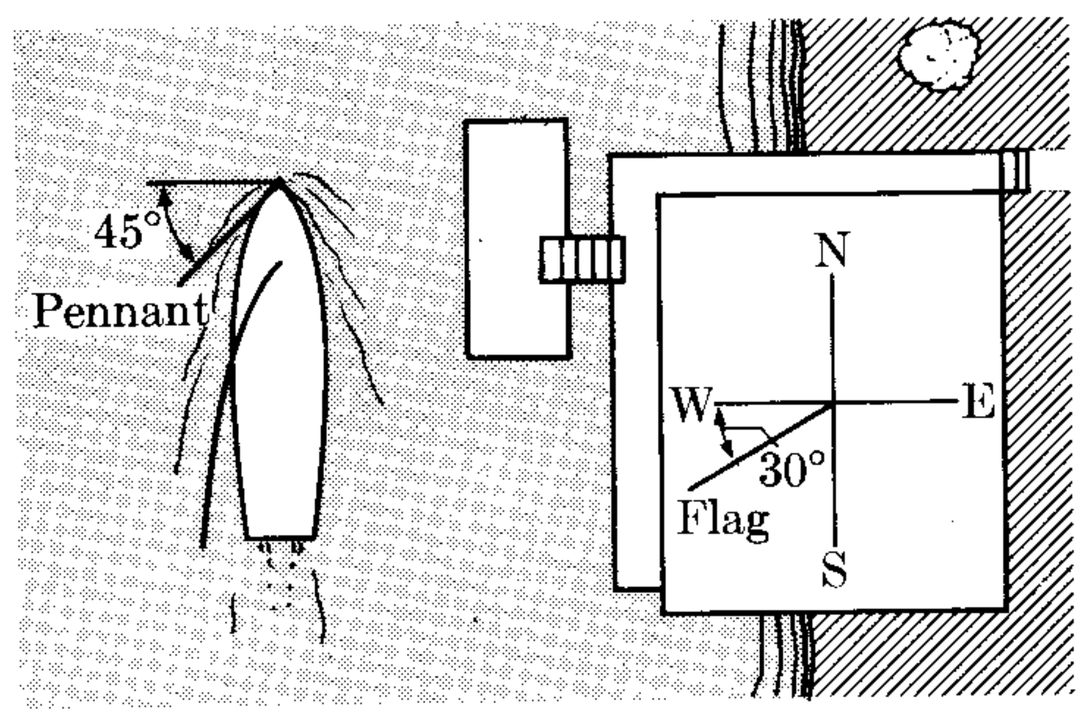

Figure 3–39

3.12 The pennant on the masthead of a sailboat streams back at an angle of 45°, as shown in Fig. 3–39, but the flag on the clubhouse extends out at 30° south of west. (a) If the speed of the boat is 10 km hr^{-1}, find the wind velocity. (b) Find the apparent wind velocity for an observer on the boat.

3.13 Prove that if the magnitudes of the sum and the difference of two vectors are equal, the vectors are perpendicular.

3.14 Prove that if the sum and the difference of two vectors are perpendicular, the vectors have equal magnitudes.

3.15 Verify that the magnitude of the sum and difference of two vectors $\boldsymbol{A}$ and $\boldsymbol{B}$, expressed in rectangular coordinates, are given by

$$S = [(A_x + B_x)^2 + (A_y + B_y)^2 + (A_x + B_z)^2]^{1/2}$$

and

$$D = [(A_x - B_x)^2 + (A_y - B_y)^2 + (A_z - B_z)^2]^{1/2},$$

respectively.

3.16 Given the vectors

$$\boldsymbol{A} = \boldsymbol{u}_x(3) + \boldsymbol{u}_y(4) + \boldsymbol{u}_z(-5)$$

and

$$\boldsymbol{B} = \boldsymbol{u}_x(-1) + \boldsymbol{u}_y(1) + \boldsymbol{u}_z(2).$$

Find: (a) the magnitude and direction of their resultant, (b) the same for their difference, $\boldsymbol{A} - \boldsymbol{B}$, and (c) the angle between $\boldsymbol{A}$ and $\boldsymbol{B}$.

3.17 Find the resultant of the sum of the following vectors:

(a) $\boldsymbol{V}_1 = \boldsymbol{u}_x(5) + \boldsymbol{u}_y(-2) + \boldsymbol{u}_z$,
(b) $\boldsymbol{V}_2 = \boldsymbol{u}_x(-3) + \boldsymbol{u}_y(1) + \boldsymbol{u}_z(-7)$,
(c) $\boldsymbol{V}_3 = \boldsymbol{u}_x(4) + \boldsymbol{u}_y(7) + \boldsymbol{u}_z(6)$.

Obtain the magnitude of the resultant and the angles it makes with the X-, Y-, and Z-axes.

3.18 Given three vectors:

(a) $\boldsymbol{V}_1 = \boldsymbol{u}_x(-1) + \boldsymbol{u}_y(3) + \boldsymbol{u}_z(4)$,
(b) $\boldsymbol{V}_2 = \boldsymbol{u}_x(3) + \boldsymbol{u}_y(-2) + \boldsymbol{u}_z(-8)$,
(c) $\boldsymbol{V}_3 = \boldsymbol{u}_x(4) + \boldsymbol{u}_y(4) + \boldsymbol{u}_z(4)$.

(a) By direct manipulation, determine whether there is any difference between the vector products $\boldsymbol{V}_1 \times (\boldsymbol{V}_2 \times \boldsymbol{V}_3)$ and $(\boldsymbol{V}_1 \times \boldsymbol{V}_2) \times \boldsymbol{V}_3$. (b) Find $\boldsymbol{V}_1 \cdot (\boldsymbol{V}_2 \times \boldsymbol{V}_3)$ and $(\boldsymbol{V}_1 \times \boldsymbol{V}_2) \cdot \boldsymbol{V}_3$ and determine whether there is any difference. Compute $(\boldsymbol{V}_3 \times \boldsymbol{V}_1) \cdot \boldsymbol{V}_2$ and compare this result with the previous two.

3.19 Express $\boldsymbol{V}_1 \cdot (\boldsymbol{V}_2 \times \boldsymbol{V}_3)$ in determinant form. Derive from it its symmetry properties; that is,

$$\boldsymbol{V}_1 \cdot \boldsymbol{V}_2 \times \boldsymbol{V}_3 = \boldsymbol{V}_3 \cdot \boldsymbol{V}_1 \times \boldsymbol{V}_2 = \boldsymbol{V}_2 \cdot \boldsymbol{V}_3 \times \boldsymbol{V}_1.$$

Prove that the value of the triple product is equal to the volume of the parallelepiped made from the three vectors.

3.20 Prove that

$$\boldsymbol{V}_1 \times (\boldsymbol{V}_2 \times \boldsymbol{V}_3) = (\boldsymbol{V}_1 \cdot \boldsymbol{V}_2)\boldsymbol{V}_2 - (\boldsymbol{V}_1 \cdot \boldsymbol{V}_2)\boldsymbol{V}_3.$$

[*Hint:* Place the X-axis along $\boldsymbol{V}_3$ and the Y-axis so that $\boldsymbol{V}_2$ is in the XY-plane, and check by direct expansion.]

3.21 Find the distance between two points, $P_1(4, 5, -7)$ and $P_2(-3, 6, 12)$. Also write the equation of the straight line passing through them.

3.22 Find the distance from point $P(4, 5, -7)$ to the straight line which passes through point $Q(-3, 6, 12)$ and is parallel to the vector $\boldsymbol{V} = \boldsymbol{u}_x(4) - \boldsymbol{u}_y(1) + \boldsymbol{u}_z(3)$. Also find the distance from point P to the plane through Q perpendicular to $\boldsymbol{V}$.

3.23 Prove that the distance between the line passing through P_1 parallel to $\boldsymbol{V}_1$ and the line through P_2 parallel to $\boldsymbol{V}_2$ is $\overrightarrow{P_1P_2} \cdot \boldsymbol{V}_1 \times \boldsymbol{V}_2 / |\boldsymbol{V}_1 \times \boldsymbol{V}_2|$. [*Note:* The distance between two skew lines is defined as the length of the shortest line perpendicular to both lines.] Write the above result in expanded form, using the coordinates of P_1 and P_2 and the components of $\boldsymbol{V}_1$ and $\boldsymbol{V}_2$. Apply to the case when $P_1(4, 5, -7)$, $P_2(-3, 6, 12)$, $\boldsymbol{V}_1 = \boldsymbol{u}_x + \boldsymbol{u}_y + \boldsymbol{u}_z$, and $\boldsymbol{V}_2 = \boldsymbol{u}_x(-2) + \boldsymbol{u}_y(1) + \boldsymbol{u}_z(3)$.

3.24 Given a line passing through $P(4, 5, -7)$ parallel to $\boldsymbol{V}_1 = \boldsymbol{u}_x(-1) + \boldsymbol{u}_y(2) + \boldsymbol{u}_z(-4)$ and a plane through $Q(-3, 6, 12)$ perpendicular to $\boldsymbol{V}_2 = \boldsymbol{u}_x + \boldsymbol{u}_y(-1) + \boldsymbol{u}_z(2)$. (a) Write the respec-

tive equations in rectangular coordinates. (b) Find the point of intersection of the line and the plane. (c) Find the angle between the line and the plane.

3.25 Find the equation of the line which passes through $P(4, 5, -7)$ and is parallel to the line of intersection of the planes $3x - 2y + 5z = 10$ and $x + y - 2 = 4$. Find also the equation of the intersection.

3.26 Prove that if $\boldsymbol{V}_1$, $\boldsymbol{V}_2$, and $\boldsymbol{V}_3$ add to zero, then $\boldsymbol{V}_1 \times \boldsymbol{V}_3 = \boldsymbol{V}_3 \times \boldsymbol{V}_2 = \boldsymbol{V}_2 \times \boldsymbol{V}_1$. From these relations, conclude that $V_1/\sin \angle V_2V_3 = V_2/\sin \angle V_3V_1 = V_3/\sin \angle V_1V_2$ where $\angle V_iV_j$ means the angle between vectors $\boldsymbol{V}_i$ and $\boldsymbol{V}_j$.

3.27 Prove that if two vectors have the same magnitude V and make an angle θ, their sum has a magnitude $S = 2V \cos \frac{1}{2}\theta$ and their difference is $D = 2V \sin \frac{1}{2}\theta$.

3.28 Using the components of $\boldsymbol{V}_1$ and $\boldsymbol{V}_2$ expressed in spherical form (Eq. 3.10), prove that the angle between the vectors may be found from

$$\cos \theta_{12} = \sin \theta_1 \sin \theta_2 \cos (\phi_1 - \phi_2) + \cos \theta_1 \cos \theta_2,$$

where θ_{12} is the angle between the vectors. This result is of great use in astronomical computations. Adapt this result to obtain the angle between the verticals at San Francisco (latitude: 37° 45′ N; longitude: 122° 27′ W) and New York (latitude: 40° 40′ N; longitude: 73° 50′ W). Check your answer against that of Problem 2.17.

3.29 Given the set of 3 noncoplanar vectors $\boldsymbol{a}_1$, $\boldsymbol{a}_2$, $\boldsymbol{a}_3$, the vectors

$$\boldsymbol{a}^1 = \frac{\boldsymbol{a}_2 \times \boldsymbol{a}_3}{\boldsymbol{a}_1 \cdot \boldsymbol{a}_2 \times \boldsymbol{a}_3},$$

$$\boldsymbol{a}^2 = \frac{\boldsymbol{a}_3 \times \boldsymbol{a}_1}{\boldsymbol{a}_1 \cdot \boldsymbol{a}_2 \times \boldsymbol{a}_3},$$

$$\boldsymbol{a}^3 = \frac{\boldsymbol{a}_1 \times \boldsymbol{a}_2}{\boldsymbol{a}_1 \cdot \boldsymbol{a}_2 \times \boldsymbol{a}_3}$$

are called the *reciprocal* vectors. Prove that $\boldsymbol{a}^i \cdot \boldsymbol{a}_i = 1$ and $\boldsymbol{a}^i \cdot \boldsymbol{a}_j = 0$, where i and j take the values 1, 2, 3. Discuss the geometrical arrangement of the reciprocal vectors $\boldsymbol{a}^1$, $\boldsymbol{a}^2$, $\boldsymbol{a}^3$ relative to $\boldsymbol{a}_1$, $\boldsymbol{a}_2$, $\boldsymbol{a}_3$.

3.30 Prove that any vector $\boldsymbol{V}$ can be written in either of the two alternative forms

$$\boldsymbol{V} = (\boldsymbol{V} \cdot \boldsymbol{a}^1)\boldsymbol{a}_1 + (\boldsymbol{V} \cdot \boldsymbol{a}^2)\boldsymbol{a}_2 + (\boldsymbol{V} \cdot \boldsymbol{a}^3)\boldsymbol{a}_3 = \textstyle\sum_i (\boldsymbol{V} \cdot \boldsymbol{a}^i)\boldsymbol{a}_i$$

or

$$\boldsymbol{V} = (\boldsymbol{V} \cdot \boldsymbol{a}_1)\boldsymbol{a}^1 + (\boldsymbol{V} \cdot \boldsymbol{a}_2)\boldsymbol{a}^2 + (\boldsymbol{V} \cdot \boldsymbol{a}_3)\boldsymbol{a}^3 = \textstyle\sum_i (\boldsymbol{V} \cdot \boldsymbol{a}_i)\boldsymbol{a}^i.$$

3.31 Calling $\boldsymbol{V} \cdot \boldsymbol{a}_i = V_i$ and $V^i = \boldsymbol{V} \cdot \boldsymbol{a}^i$ the *covariant* and *contravariant* components of $\boldsymbol{V}$, and

$$g_{ij} = \boldsymbol{a}_i \cdot \boldsymbol{a}_j, \qquad g^{ij} = \boldsymbol{a}^i \cdot \boldsymbol{a}^j,$$

prove that

$$V^j = \textstyle\sum_i V_i g^{ij}, \qquad V_j = \sum_i V^i g_{ij},$$

and

$$V^2 = \textstyle\sum_i V_i V^i = \sum_{ij} V_i V_j g^{ij} = \sum_{ij} V^i V^j g_{ij}.$$

These relations are very important in vector calculations using nonrectangular coordinates, and are especially useful in solid-state physics when one is dealing with the crystalline structure of solids.

3.32 Prove that

$$\boldsymbol{a}^1 \cdot \boldsymbol{a}^2 \times \boldsymbol{a}^3 = 1/\boldsymbol{a}_1 \cdot \boldsymbol{a}_2 \times \boldsymbol{a}_3.$$

3.33 Prove that $\boldsymbol{r} = \boldsymbol{a}s^2 + \boldsymbol{b}s + \boldsymbol{c}$ (where $\boldsymbol{a}$, $\boldsymbol{b}$, and $\boldsymbol{c}$ are constant vectors and s a scalar variable) represents a parabola lying in the plane determined by vectors $\boldsymbol{a}$ and $\boldsymbol{b}$ and passing through a point whose position vector is $\boldsymbol{c}$.

3.34 Show that a unit vector in three dimensions can be expressed as

$$\boldsymbol{u} = \boldsymbol{u}_x \cos \alpha + \boldsymbol{u}_y \cos \beta + \boldsymbol{u}_z \cos \theta,$$

where the angles α, β, and θ are as defined in Fig. 3–17.

3.35 Using the fact that the vector representing a closed surface is zero, prove that two surfaces having the same closed line as a boundary are represented by the same vector.

3.36 An open surface is limited by a triangle with vertices at (0, 0, 0), (2, 0, 0), and (0, 2, 0). It is composed of three triangular surfaces each having one side coincident with the sides of the triangle and one common vertex at point (a, b, c). Show that the vector representing the complete surface is independent of (a, b, c). Was this result to be expected in view of Problem 3.35?

3.37 A tetrahedron is a solid body limited by four triangular surfaces. Consider the tetrahedron with vertices at points (0, 0, 0), (2, 0, 0), (0, 2, 0), and (1, 1, 2). Find: (a) the vector representing each face; (b) the vector representing the whole tetrahedron; (c) the magnitude of the surface of the tetrahedron. Were you expecting the result obtained in (b)?

3.38 Using vector methods, find: (a) the length of the diagonals of a cube; (b) their angles with the adjacent sides; (c) their angles with the adjacent faces; (d) the angles between the diagonals.

3.39 The faces of a regular tetrahedron are equilateral triangles of side a. Find, using vector methods, the angle of each side with the opposite face and the distance from one vertex to the opposite face.

4
FORCES

4.1 Introduction
4.2 Composition of Concurrent Forces
4.3 Torque
4.4 Torque of Several Concurrent Forces
4.5 Composition of Forces Applied to a Rigid Body
4.6 Composition of Coplanar Forces
4.7 Composition of Parallel Forces
4.8 Center of Mass
4.9 Statics. Equilibrium of a Particle
4.10 Statics. Equilibrium of a Rigid Body

4.1 Introduction

An important usage of vector algebra is its application to the composition of forces. The precise definition of force will be analyzed in Chapter 7, where we shall discuss the dynamics of motion. However, to gain more skill in the manipulation of vectors, we shall now discuss the composition of forces, and in particular the equilibrium of forces, a problem of wide application in engineering.

We shall assume at present an intuitive notion of force, derived from our everyday experience, such as the force needed to push or pull a given weight, the force exerted by certain tools, etc. This intuitive notion suggests that force is a vector quantity having magnitude (or intensity) and direction. Experience confirms that forces are combined according to the rules of vector algebra. In this chapter we shall consider forces applied only to mass points or particles and rigid bodies.

In the MKSC system, the unit of force is the *newton* (abbreviated N), which will be defined in Section 7.8. In this chapter, however, we shall also express force in other units, such as *kilogram-force* (kgf), *pound-force* (lbf), *poundal* (pdl), and *ton* (T). These units, which are frequently used in engineering, have equivalences with the newton as follows:

$$1 \text{ kgf} = 9.8 \text{ N}, \qquad 1 \text{ lbf} = 0.46 \text{ kgf} \approx 4.45 \text{ N},$$
$$1 \text{ pdl} = 0.031 \text{ lbf} \approx 0.138 \text{ N}, \qquad 1 \text{ T} = 2000 \text{ lbf} \approx 8900 \text{ N}.$$

It is customary in engineering practice, when referring to pounds-force and to kilograms-force, to say simply "pounds" and "kilograms," although these actually refer to units of mass.

4.2 Composition of Concurrent Forces

If the forces are concurrent (i.e., if they are all applied at the same point), their resultant is their vector sum, obtained according to the method explained in Section 3.6. Therefore, the resultant $\boldsymbol{R}$ of several concurrent forces $\boldsymbol{F}_1, \boldsymbol{F}_2, \boldsymbol{F}_3, \ldots$ is

$$\boldsymbol{R} = \boldsymbol{F}_1 + \boldsymbol{F}_2 + \boldsymbol{F}_3 + \cdots = \sum \boldsymbol{F}_i. \tag{4.1}$$

If the forces are coplanar, say in the XY-plane, we have, in view of Eq. (3.16), that $\boldsymbol{R} = \boldsymbol{u}_x R_x + \boldsymbol{u}_y R_y$, where

$$R_x = \sum F_{ix} = \sum F_i \cos \alpha_i, \qquad R_y = \sum F_{iy} = \sum F_i \sin \alpha_i. \tag{4.2}$$

The magnitude of $\boldsymbol{R}$ is $R = \sqrt{R_x^2 + R_y^2}$, and its direction is given by the angle α such that $\tan \alpha = R_y/R_x$. We must assume that the resultant $\boldsymbol{R}$ is physically equivalent to the components $\boldsymbol{F}_1, \boldsymbol{F}_2, \boldsymbol{F}_3, \ldots$.

EXAMPLE 4.1. Find the resultant of the following forces acting on a body at O (Fig. 4–1). Force $\boldsymbol{F}_1$ is equal to 1200 lbf, force $\boldsymbol{F}_2$ is equal to 900 lbf, force $\boldsymbol{F}_3$ is 300 lbf, and force $\boldsymbol{F}_4$ is 800 lbf. The directions are as indicated in the figure.

Solution: First we express each force in terms of its components along the X- and Y-axes, using in each case the angle between the positive X-axis and the force. Thus

$$\begin{aligned}
\boldsymbol{F}_1 &= \boldsymbol{u}_x(1200)\ \text{lbf},\\
\boldsymbol{F}_2 &= \boldsymbol{u}_x(F_2\cos 40°) + \boldsymbol{u}_y(F_2\sin 40°) = \boldsymbol{u}_x(689.4) + \boldsymbol{u}_y(578.5)\ \text{lbf},\\
\boldsymbol{F}_3 &= \boldsymbol{u}_x(F_3\cos 120°) + \boldsymbol{u}_y(F_3\sin 120°) = \boldsymbol{u}_x(-150) + \boldsymbol{u}_y(259.8)\ \text{lbf},\\
\boldsymbol{F}_4 &= \boldsymbol{u}_x(F_4\cos 230°) + \boldsymbol{u}_y(F_4\sin 230°) = \boldsymbol{u}_x(-514.2) + \boldsymbol{u}_y(-612.8)\ \text{lbf}.
\end{aligned}$$

Then since $\boldsymbol{R} = \boldsymbol{F}_1 + \boldsymbol{F}_2 + \boldsymbol{F}_3 + \boldsymbol{F}_4$, we have

$$\begin{aligned}
R_x &= 1200 + 689.4 - 150 - 514.2 = 1225.2\ \text{lbf},\\
R_y &= 0 + 578.5 + 259.8 - 612.8 = 225.5\ \text{lbf},
\end{aligned}$$

or $\boldsymbol{R} = \boldsymbol{u}_x(1225.2) + \boldsymbol{u}_y(225.5)$ lbf, from which the magnitude and direction of the resultant force can be found to be $R = 1245.4$ lbf and $\alpha = 10.4°$.

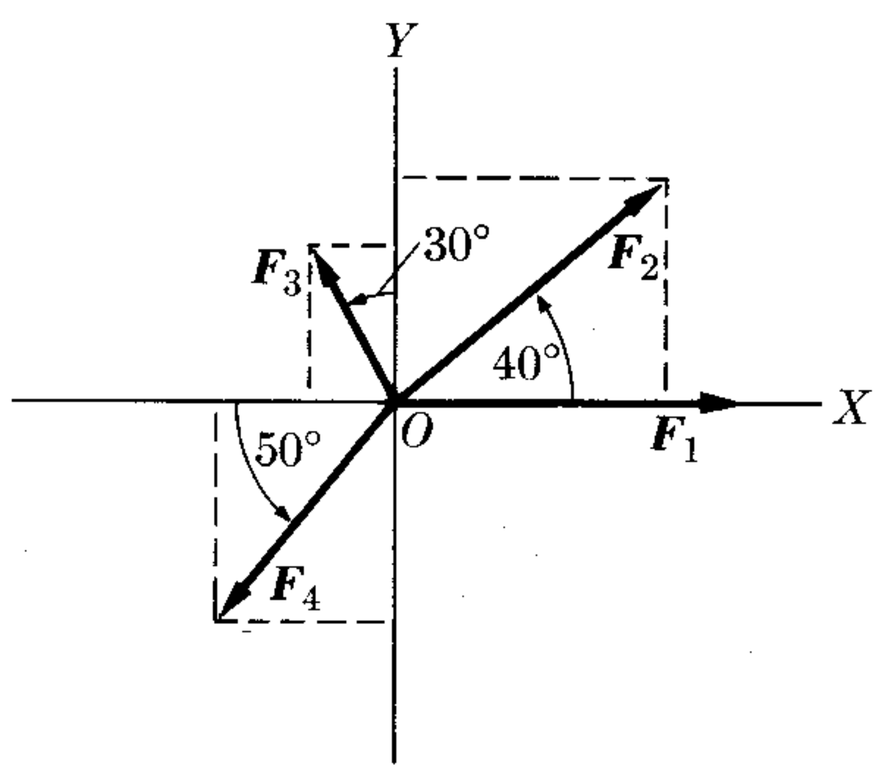

Figure 4–1

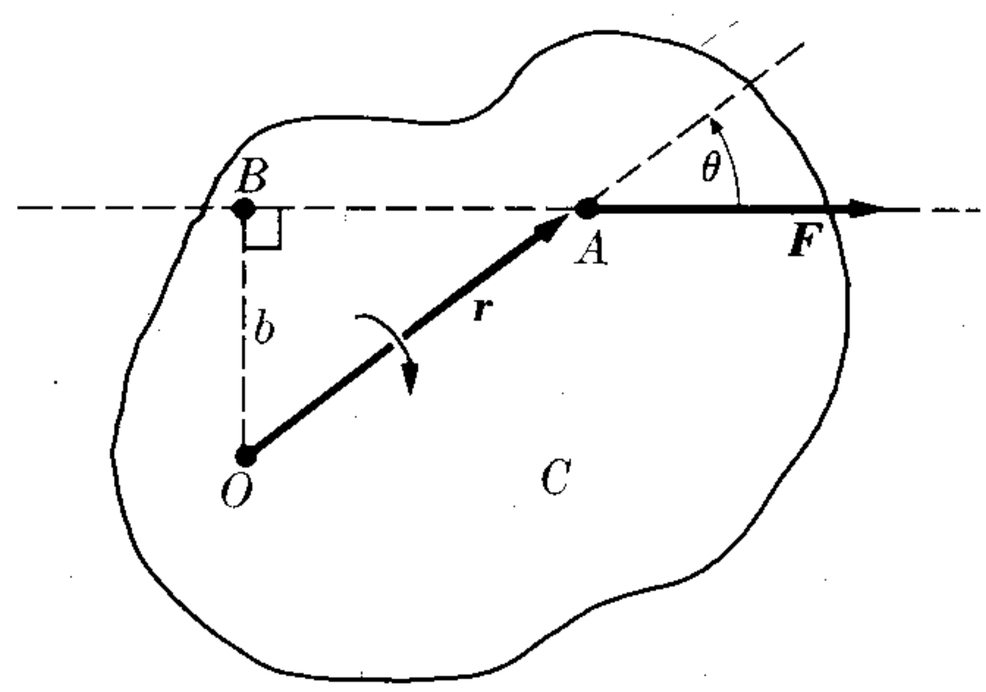

Fig. 4–2. Torque of a force.

4.3 Torque

Consider a force $\boldsymbol{F}$ acting on a body C that can rotate about point O (Fig. 4–2). If the force does not pass through O, the net effect will be to rotate the body around O. Our daily experience suggests that the rotating effectiveness of $\boldsymbol{F}$ increases with the perpendicular distance (called *lever arm*) $b = OB$ from O to the line of action of the force. For example, when we open a door, we always push or pull as far as possible from the hinges and attempt to keep the direction of our push or pull perpendicular to the door. This experience therefore suggests the convenience of defining a physical quantity τ that will be called *torque*, according to

$$\tau = Fb, \tag{4.3}$$

or torque = force × lever arm. Accordingly, torque must be expressed as the product of a unit of force and a unit of distance. Thus in the MKSC system, torque is expressed in newtons meter or N m. But other units, such as kgf m or lbf ft, are also used.

Noting from the figure that $b = r \sin \theta$, we also may write

$$\tau = Fr \sin \theta. \tag{4.4}$$

Comparing this equation with Eq. (3.21), we conclude that the torque may be considered as a vector quantity given by the vector product

$$\boldsymbol{\tau} = \boldsymbol{r} \times \boldsymbol{F}, \tag{4.5}$$

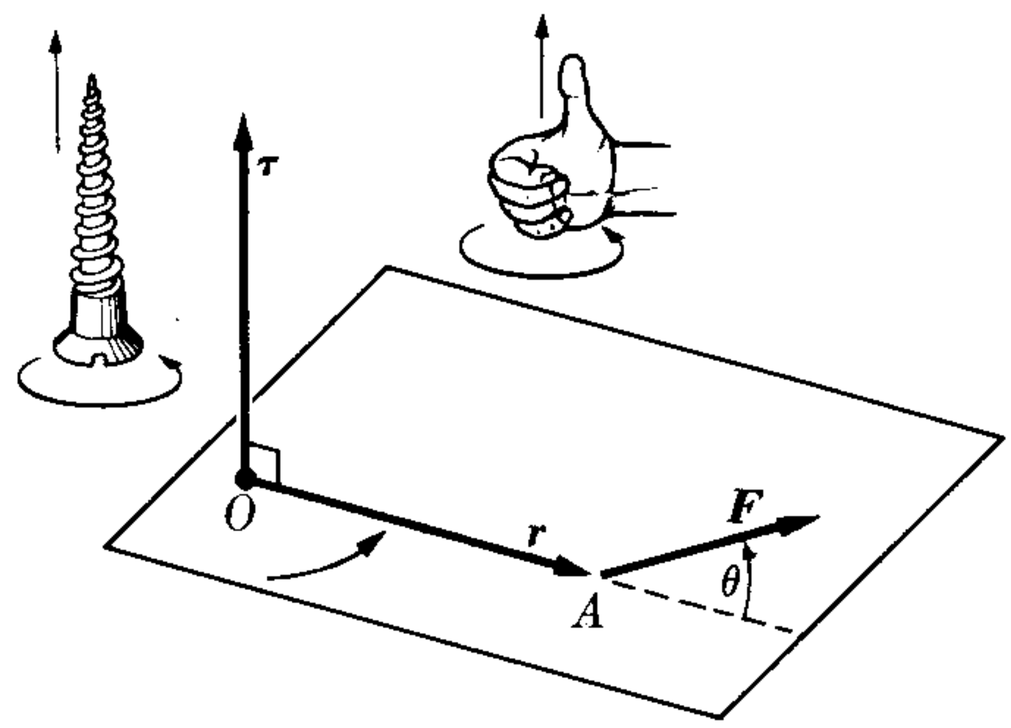

Fig. 4–3. Vector relation between torque, force, and position vector.

where $\boldsymbol{r}$ is the position vector, relative to O, of the point A on which the force is acting. According to the properties of the vector product, the torque is represented by a vector perpendicular to both $\boldsymbol{r}$ and $\boldsymbol{F}$; that is, perpendicular to the plane that may be drawn through both $\boldsymbol{r}$ and $\boldsymbol{F}$, and directed according to the sense of advance of a right-handed screw rotated in the same sense as the rotation produced by $\boldsymbol{F}$ around O. This is indicated in Fig. 4–3.

Remembering that $\boldsymbol{r} = \boldsymbol{u}_x x + \boldsymbol{u}_y y + \boldsymbol{u}_z z$ and $\boldsymbol{F} = \boldsymbol{u}_x F_x + \boldsymbol{u}_y F_y + \boldsymbol{u}_z F_z$, we have, by application of Eq. (3.26),

$$\boldsymbol{\tau} = \begin{vmatrix} \boldsymbol{u}_x & \boldsymbol{u}_y & \boldsymbol{u}_z \\ x & y & z \\ F_x & F_y & F_z \end{vmatrix} = \boldsymbol{u}_x(yF_z - zF_y) + \boldsymbol{u}_y(zF_x - xF_z) + \boldsymbol{u}_z(xF_y - yF_x); \tag{4.6}$$

or $\tau_x = yF_z - zF_y$, $\tau_y = zF_x - xF_z$, and $\tau_z = xF_y - yF_x$. In particular, if both $\boldsymbol{r}$ and $\boldsymbol{F}$ are in the XY-plane, $z = 0$ and $F_z = 0$, so that

$$\boldsymbol{\tau} = \boldsymbol{u}_z(xF_y - yF_x), \tag{4.7}$$

and is parallel to the Z-axis, as illustrated in Fig. 4–4. In magnitude, we have

$$\tau = xF_y - yF_x. \tag{4.8}$$

Note that a force may be displaced along its line of action without changing its torque because the distance b remains the same. Thus when x and y are left arbitrary, Eq. (4.8) expresses the equation of the line of action of the force having a torque $\boldsymbol{\tau}$.

EXAMPLE 4.2. Determine the torque applied to the body in Fig. 4–5, where $\boldsymbol{F}$ is 6 N and makes an angle of 30° with the X-axis and $\boldsymbol{r}$ is 45 cm long and makes an angle of 50° with the $+X$-axis. Find also the equation of the line of action of the force.

Solution: We may proceed in two different ways. First, from the figure we see that the lever arm of F (since $r = 45$ cm $= 0.45$ m) is $b = r \sin 20° = (0.45 \text{ m})(0.342) = 0.154$ m.

Thus the torque around O is

$$\tau = Fb = (6\text{ N})(0.154\text{ m}) = 0.924\text{ N m}.$$

Strictly speaking, we must write -0.924 N m, because the rotation around O is clockwise, corresponding to a screw advancing in the $-Z$ direction, or into the paper.

As a second method, we may use Eq. (4.8), since the problem is in two dimensions. Now

$$x = r\cos 50° = 0.289\text{ m}, \qquad y = r\sin 50° = 0.345\text{ m},$$
$$F_x = F\cos 30° = 5.196\text{ N}, \qquad F_y = F\sin 30° = 3.0\text{ N}.$$

Thus

$$\tau = xF_y - yF_x = 0.867 - 1.792 = -0.925\text{ N m},$$

in agreement with our previous result. This method has the additional advantage of also giving the sign.

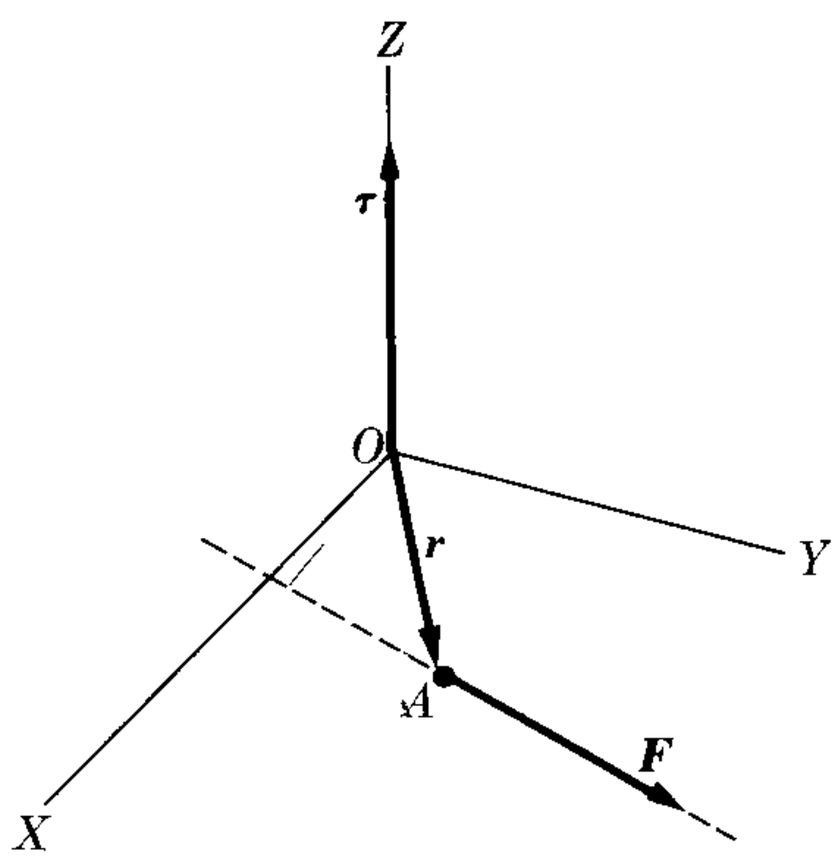

Figure 4–4

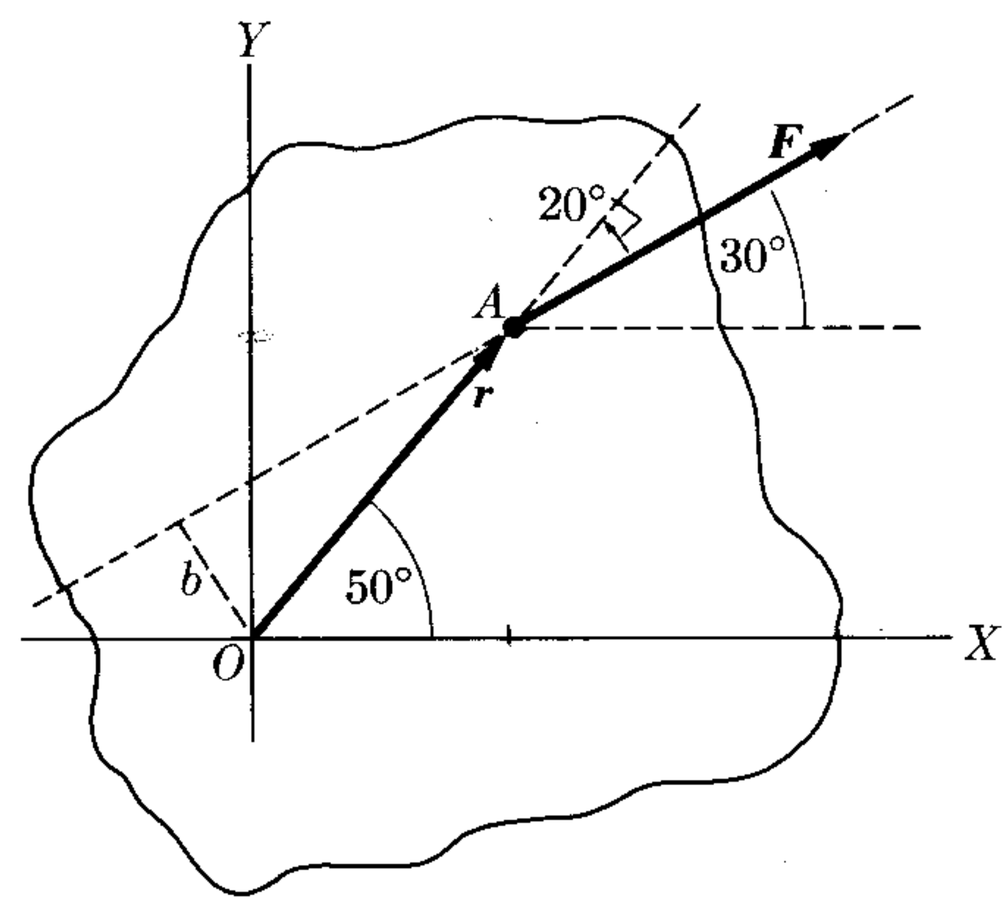

Figure 4–5

To obtain the equation of the line of action of $\boldsymbol{F}$, we simply leave x and y arbitrary in Eq. (4.8), resulting in

$$-0.925 = 3x - 5.196y.$$

4.4 Torque of Several Concurrent Forces

Consider now the case of several concurrent forces $\boldsymbol{F}_1, \boldsymbol{F}_2, \boldsymbol{F}_3, \ldots$ acting on a point A (Fig. 4–6). The torque of each $\boldsymbol{F}_i$ relative to O is $\boldsymbol{\tau}_i = \boldsymbol{r} \times \boldsymbol{F}_i$; note that we write $\boldsymbol{r}$ and not $\boldsymbol{r}_i$ because all forces are applied at the same point. The torque of the resultant $\boldsymbol{R}$ is $\boldsymbol{\tau} = \boldsymbol{r} \times \boldsymbol{R}$, where $\boldsymbol{R} = \boldsymbol{F}_1 + \boldsymbol{F}_2 + \boldsymbol{F}_3 + \cdots$ and $\boldsymbol{r}$ is again the common position vector. Applying the distributive property of the vector product, we have

$$\begin{aligned}\boldsymbol{r} \times \boldsymbol{R} &= \boldsymbol{r} \times (\boldsymbol{F}_1 + \boldsymbol{F}_2 + \boldsymbol{F}_3 + \cdots) \\ &= \boldsymbol{r} \times \boldsymbol{F}_1 + \boldsymbol{r} \times \boldsymbol{F}_2 + \boldsymbol{r} \times \boldsymbol{F}_3 + \cdots\end{aligned}$$

Therefore

$$\boldsymbol{\tau} = \boldsymbol{\tau}_1 + \boldsymbol{\tau}_2 + \boldsymbol{\tau}_3 + \cdots = \sum \boldsymbol{\tau}_i. \qquad (4.9)$$

In words, the torque of the resultant is equal to the vector sum of the torques of the component forces if they are concurrent.

If all the forces are coplanar, and O is also in the same plane, all torques appearing in Eq. (4.9) have the same direction perpendicular to the plane, and the relation (4.9) can be written as

$$\boldsymbol{\tau} = \sum \boldsymbol{\tau}_i. \qquad (4.10)$$

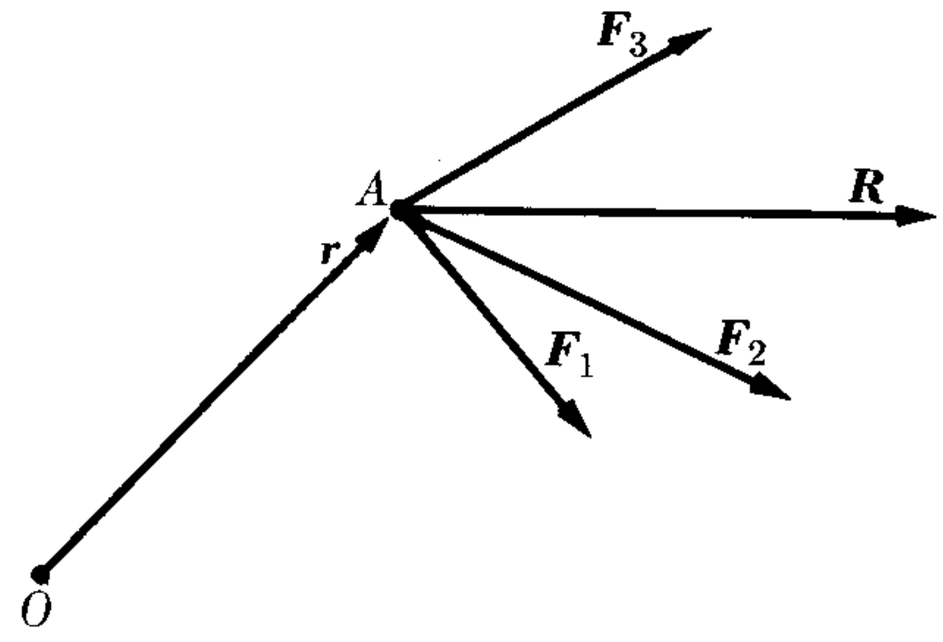

Fig. 4–6. When the forces are concurrent, the torque of the resultant is equal to the vector sum of the torque of the components.

Equation (4.9) proves that *a system of concurrent forces can be replaced by a single force*, its resultant, that is completely equivalent to the system in so far as translational and rotational effects are concerned.

EXAMPLE 4.3. Consider three forces applied at point A of Fig. 4–7, with $r = 1.5$ ft and

$$\boldsymbol{F}_1 = \boldsymbol{u}_x(6) + \boldsymbol{u}_y(0) + \boldsymbol{u}_z(0) \text{ lbf},$$
$$\boldsymbol{F}_2 = \boldsymbol{u}_x(6) - \boldsymbol{u}_y(7) + \boldsymbol{u}_z(14) \text{ lbf},$$
$$\boldsymbol{F}_3 = \boldsymbol{u}_x(5) + \boldsymbol{u}_y(0) - \boldsymbol{u}_z(3) \text{ lbf}.$$

Using O as the reference point, find the resultant torque due to these forces.

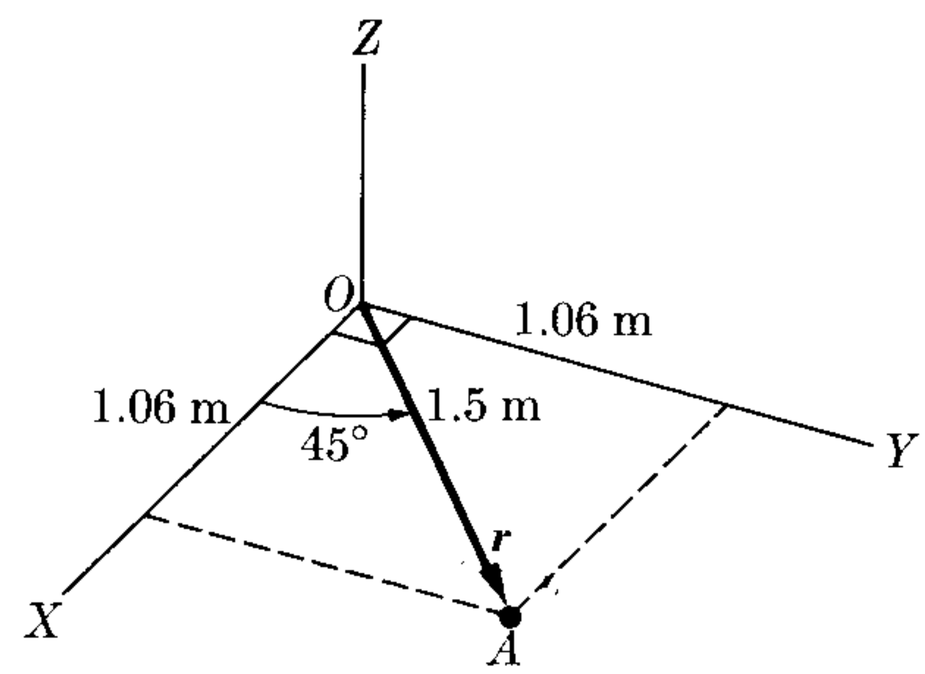

Figure 4–7

Solution: First, using the concept $\boldsymbol{\tau} = \boldsymbol{r} \times \boldsymbol{R}$, where $\boldsymbol{R} = \sum \boldsymbol{F}_i$, we have

$$\begin{aligned}\boldsymbol{R} &= \boldsymbol{u}_x(6 + 6 + 5) + \boldsymbol{u}_y(0 - 7 + 0) + \boldsymbol{u}_z(0 + 14 - 3) \text{ lbf}\\ &= \boldsymbol{u}_x(17) - \boldsymbol{u}_y(7) + \boldsymbol{u}_z(11) \text{ lbf}.\end{aligned}$$

Using this value along with $\boldsymbol{r} = \boldsymbol{u}_x(1.06) + \boldsymbol{u}_y(1.06)$ ft, we can write the resultant torque, using Eq. (4.6), as

$$\boldsymbol{\tau} = \boldsymbol{r} \times \boldsymbol{R} = \boldsymbol{u}_x(11.66) - \boldsymbol{u}_y(11.66) - \boldsymbol{u}_z(25.44) \text{ ft-lbf}.$$

The resultant torque can also be found by applying Eq. (4.9) as $\boldsymbol{\tau} = \boldsymbol{\tau}_1 + \boldsymbol{\tau}_2 + \boldsymbol{\tau}_3$. Now, again applying Eq. (4.6) to each component force, we have

$$\boldsymbol{\tau}_1 = \boldsymbol{r} \times \boldsymbol{F}_1 = \boldsymbol{u}_x(0) + \boldsymbol{u}_y(0) - \boldsymbol{u}_z(6.36) \text{ ft-lbf},$$
$$\boldsymbol{\tau}_2 = \boldsymbol{r} \times \boldsymbol{F}_2 = \boldsymbol{u}_x(14.84) - \boldsymbol{u}_y(14.84) - \boldsymbol{u}_z(13.78) \text{ ft-lbf},$$
$$\boldsymbol{\tau}_3 = \boldsymbol{r} \times \boldsymbol{F}_3 = -\boldsymbol{u}_x(3.18) + \boldsymbol{u}_y(3.18) - \boldsymbol{u}_z(5.30) \text{ ft-lbf}.$$

Adding the three torques, we obtain our previous result for $\boldsymbol{\tau}$. In this way we have verified Eq. (4.9). The student should verify that $\boldsymbol{\tau} \cdot \boldsymbol{R} = 0$, indicating that $\boldsymbol{\tau}$ and $\boldsymbol{R}$ are perpendicular for concurrent forces.

4.5 Composition of Forces Applied to a Rigid Body

When the forces are not applied to the same point, but act on a rigid body, it is necessary to distinguish two effects: translation and rotation. The translation of the body is determined by the vector sum of the forces; that is,

$$\boldsymbol{R} = \boldsymbol{F}_1 + \boldsymbol{F}_2 + \boldsymbol{F}_3 + \boldsymbol{F}_4 + \cdots = \sum \boldsymbol{F}_i. \tag{4.11}$$

In this case the point of application of $\boldsymbol{R}$ is still undetermined. The rotational effect on the body is determined by the vector sum of the torques of the forces, all evaluated with respect to the same point:

$$\boldsymbol{\tau} = \boldsymbol{\tau}_1 + \boldsymbol{\tau}_2 + \boldsymbol{\tau}_3 + \cdots = \sum \boldsymbol{\tau}_i. \tag{4.12}$$

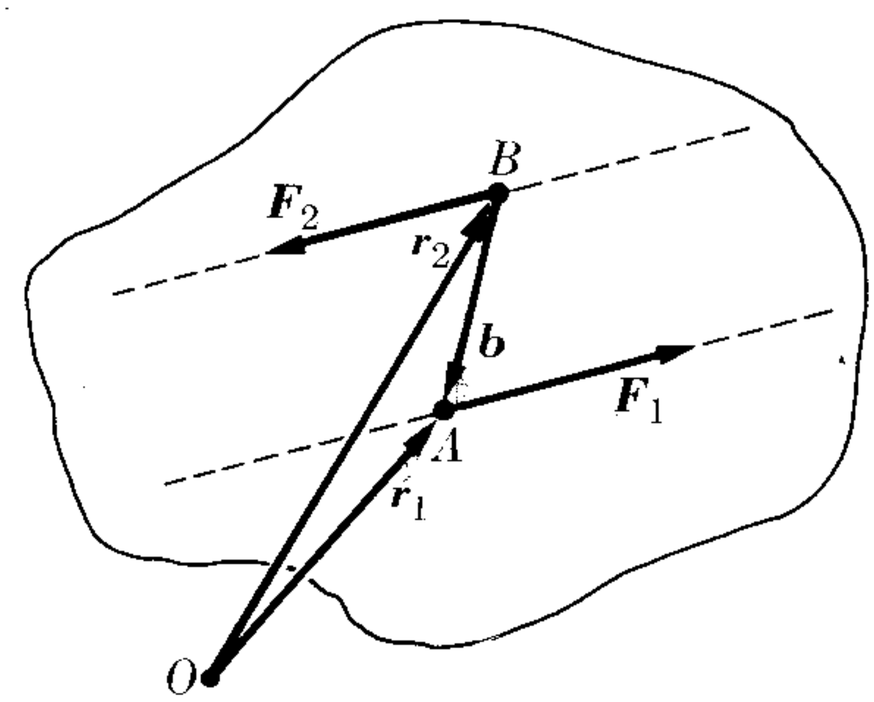

Fig. 4–8. Couple.

At first sight it seems logical to suggest, then, that force $\boldsymbol{R}$ should be applied at a point chosen in such a way that the torque due to $\boldsymbol{R}$ is equal to $\boldsymbol{\tau}$, a situation that, as we know, always holds in the case of concurrent forces. If that is possible, the force $\boldsymbol{R}$ so applied is equivalent to the system, both in translation and rotation.

Generally, however, this is not possible because the torque of $\boldsymbol{R}$ is a vector perpendicular to $\boldsymbol{R}$ and in many cases $\boldsymbol{R}$ and $\boldsymbol{\tau}$, given by Eqs. (4.11) and (4.12), are not perpendicular. Therefore, in general, a system of forces acting on a rigid body cannot be reduced to a single force or resultant equal to the vector sum of the forces.

As a simple example let us consider a *couple*, which is defined as a system of two forces of equal magnitude but opposite directions acting along parallel lines (Fig. 4–8). The resultant or vector sum of the two forces is obviously zero, $\boldsymbol{R} = \boldsymbol{F}_1 + \boldsymbol{F}_2 = 0$, indicating that the couple produces no translational effect. On the other hand, the vector sum of the torques, taking into account the fact that $\boldsymbol{F}_2 = -\boldsymbol{F}_1$, is

$$\begin{aligned} \boldsymbol{\tau} = \boldsymbol{\tau}_1 + \boldsymbol{\tau}_2 &= \boldsymbol{r}_1 \times \boldsymbol{F}_1 + \boldsymbol{r}_2 \times \boldsymbol{F}_2 = \boldsymbol{r}_1 \times \boldsymbol{F}_1 - \boldsymbol{r}_2 \times \boldsymbol{F}_1 \\ &= (\boldsymbol{r}_1 - \boldsymbol{r}_2) \times \boldsymbol{F}_1 = \boldsymbol{b} \times \boldsymbol{F}_1, \end{aligned} \tag{4.13}$$

where $\boldsymbol{b} = \boldsymbol{r}_1 - \boldsymbol{r}_2$ is called the lever arm of the couple. Therefore $\boldsymbol{\tau} \neq 0$, and the couple produces a rotational effect. Note that $\boldsymbol{b}$ is independent of the position of O, and therefore the torque of the system is independent of the origin about which the torque is computed. Obviously it is impossible to find a single force satisfying all these conditions.

Returning to the general case, we observe that a system of forces can always be reduced to a force *and* a couple. The force is chosen equal to $\boldsymbol{R}$ for translational equivalence and is applied at the point about which the torques were evaluated, so that its torque is zero. The couple with a torque equal to $\boldsymbol{\tau}$ is then chosen for rotational equivalence.

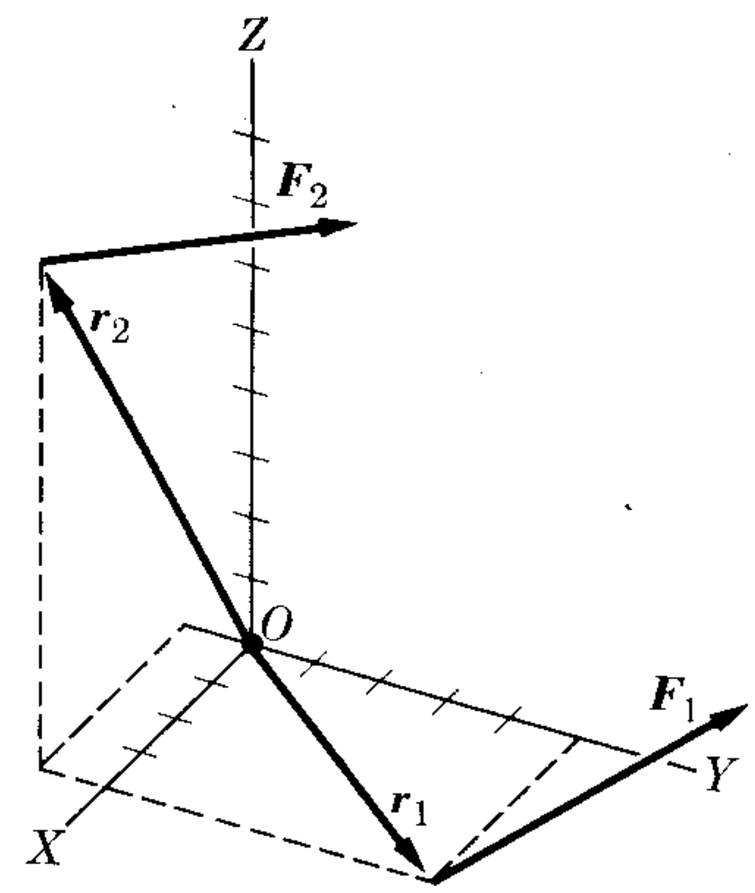

Figure 4–9

EXAMPLE 4.4. Find the resultant force and the resultant torque of the system illustrated in Fig. 4–9, where

$$\boldsymbol{F}_1 = \boldsymbol{u}_x(3) + \boldsymbol{u}_y(4) + \boldsymbol{u}_z(4) \text{ N}$$

and

$$\boldsymbol{F}_2 = \boldsymbol{u}_x(-2) + \boldsymbol{u}_y(5) + \boldsymbol{u}_z(1) \text{ N},$$

and the points of application are A (0.4 m, 0.5 m, 0) and B (0.4 m, −0.1 m, 0.8 m).

Solution: We first find the resultant,

$$\boldsymbol{R} = \boldsymbol{F}_1 + \boldsymbol{F}_2 = \boldsymbol{u}_x(1) + \boldsymbol{u}_y(9) + \boldsymbol{u}_z(5) \text{ N}.$$

Next we find the torque of each force about O:

$$\boldsymbol{\tau}_1 = \boldsymbol{r}_1 \times \boldsymbol{F}_1 = \boldsymbol{u}_x(2) + \boldsymbol{u}_y(-1.6) + \boldsymbol{u}_z(0.1) \text{ N m}.$$

$$\boldsymbol{\tau}_2 = \boldsymbol{r}_2 \times \boldsymbol{F}_2 = \boldsymbol{u}_x(-4.1) + \boldsymbol{u}_y(-2.0) + \boldsymbol{u}_z(1.8) \text{ N m}.$$

Therefore

$$\boldsymbol{\tau} = \boldsymbol{\tau}_1 + \boldsymbol{\tau}_2 = \boldsymbol{u}_x(-2.1) + \boldsymbol{u}_y(-3.6) + \boldsymbol{u}_z(1.9) \text{ N m}.$$

To see now if $\boldsymbol{R}$ can be located so that its torque is equal to $\boldsymbol{\tau}$, we must discover first if $\boldsymbol{\tau}$ and $\boldsymbol{R}$ are perpendicular. Applying Eq. (3.20), we find

$$\boldsymbol{\tau} \cdot \boldsymbol{R} = (-2.1)(1) + (-3.6)(9) + (1.8)(5) = -25.5 \text{ N m}.$$

So $\boldsymbol{\tau} \cdot \boldsymbol{R}$ is different from zero. Therefore the system of Fig. 4–9 cannot be reduced to a single force.

4.6 Composition of Coplanar Forces

When the forces are all in a plane, it is always possible to reduce the system to one resultant force $\boldsymbol{R}$, given by Eq. (4.1) (unless it reduces to a couple if $\boldsymbol{R} = 0$ but $\boldsymbol{\tau} \neq 0$), because in this case $\boldsymbol{\tau}$ is always perpendicular to $\boldsymbol{R}$. Placing the origin of coordinates O at the center of torques in the plane of the forces, we note that $\boldsymbol{\tau}_1, \boldsymbol{\tau}_2, \ldots$ and also $\boldsymbol{\tau} = \sum_i \boldsymbol{\tau}_i$ are all perpendicular to the plane, as we see by application of Eqs. (4.6) or (4.7), and from Fig. 4–4. Therefore, $\boldsymbol{R}$ and $\boldsymbol{\tau}$ are perpendicular, and it is possible to place $\boldsymbol{R}$ at such a distance $\boldsymbol{r}$ from O that its torque is equal to $\boldsymbol{\tau}$, that is, $\boldsymbol{r} \times \boldsymbol{R} = \boldsymbol{\tau}$. In this case the vector relation $\boldsymbol{\tau} = \sum_i \boldsymbol{\tau}_i$ can be replaced by the scalar equation $\tau = \sum_i \tau_i$, where each τ_i is computed according to Eq. (4.8), because all vectors have the same direction. Therefore, if R_x and R_y are the rectangular components of $\boldsymbol{R}$, then $\boldsymbol{R}$ must be placed at a point

(x, y) such that

$$xR_y - yR_x = \tau. \tag{4.14}$$

This is the equation of a straight line that corresponds to the line of action of the resultant force; i.e., there is not a single point of application, but rather a line of application.

More elaborate reasoning shows that this result holds even when the center of torques is outside the plane of the forces.

EXAMPLE 4.5. Determine the resultant of the system of forces illustrated in Fig. 4–10, all acting in one plane. The magnitudes of the forces are $F_1 = 10$ kgf, $F_2 = 8$ kgf, $F_3 = 7$ kgf. The side of each square is 0.1 m.

Solution: We first write each force in vector form:

$$\begin{aligned} \boldsymbol{F}_1 &= \boldsymbol{u}_x(10) \text{ kgf}, \\ \boldsymbol{F}_2 &= \boldsymbol{u}_x(F_2 \cos 135°) + \boldsymbol{u}_y(F_2 \sin 135°) = \boldsymbol{u}_x(-5.66) + \boldsymbol{u}_y(5.66) \text{ kgf}, \\ \boldsymbol{F}_3 &= -\boldsymbol{u}_y(7) \text{ kgf}. \end{aligned}$$

The resultant force $\boldsymbol{R} = \boldsymbol{F}_1 + \boldsymbol{F}_2 + \boldsymbol{F}_3$ is thus

$$\boldsymbol{R} = \boldsymbol{u}_x(4.34) + \boldsymbol{u}_y(-1.34) \text{ kgf}$$

or $R = 4.54$ kgf, and it makes an angle $\alpha = -17.1°$ with the X-axis.

The coordinates of the points of application of the forces are A (0.2 m, 0), B (0.5 m, 0.3 m), and C (0, 0.5 m). Using Eq. (4.8), we compute

$$\begin{aligned} \tau_1 &= -(0.3 \text{ m})(10 \text{ kgf}) = -3.00 \text{ kgf m}, \\ \tau_2 &= -(0.5 \text{ m})(-5.66 \text{ kgf}) = +2.83 \text{ kgf m}, \\ \tau_3 &= (0.2 \text{ m})(-7 \text{ kgf}) = -1.40 \text{ kgf m}. \end{aligned}$$

Thus $\tau = \tau_1 + \tau_2 + \tau_3 = -1.57$ kgf m, and is a vector along the Z-axis. To find the line of action of the resultant we apply Eq. (4.14), leaving x and y arbitrary. Then

$$x(-1.34) - y(4.34) = -1.57$$

or

$$1.34x + 4.44y = 1.57,$$

corresponding to the straight line SU.

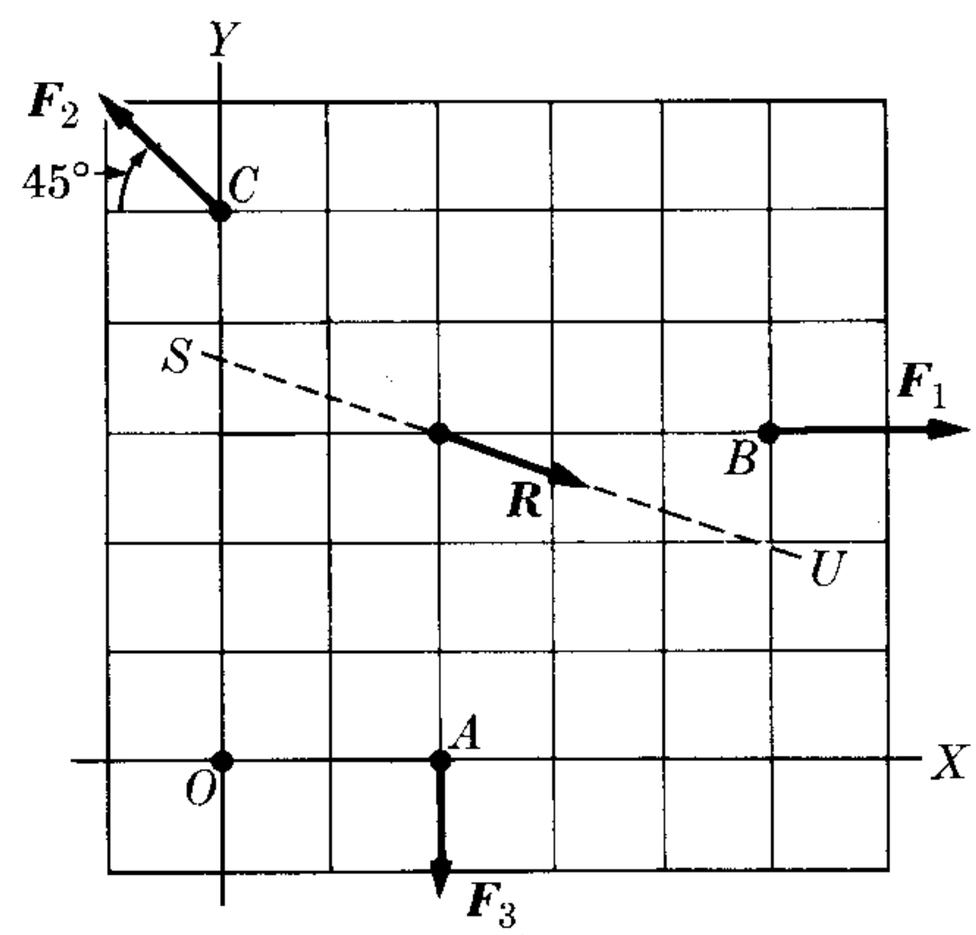

Figure 4–10

4.7 Composition of Parallel Forces

Let us consider a system of forces parallel to a unit vector $\boldsymbol{u}$. Then $\boldsymbol{F}_i = \boldsymbol{u}F_i$, where F_i is positive or negative depending on whether the direction of $\boldsymbol{F}_i$ is the same as $\boldsymbol{u}$ or opposite. The vector sum is

$$\boldsymbol{R} = \textstyle\sum_i \boldsymbol{F}_i = \sum_i \boldsymbol{u}F_i = \boldsymbol{u}(\sum_i F_i), \tag{4.15}$$

and therefore is also parallel to $\boldsymbol{u}$. The magnitude of the resultant is then

$$R = \sum_i F_i. \tag{4.16}$$

The vector sum of the torques is

$$\boldsymbol{\tau} = \sum_i \boldsymbol{r}_i \times \boldsymbol{F}_i = \sum_i \boldsymbol{r}_i \times \boldsymbol{u}F_i = (\sum_i \boldsymbol{r}_i F_i) \times \boldsymbol{u},$$

which is perpendicular to $\boldsymbol{u}$ and therefore also perpendicular to $\boldsymbol{R}$. Accordingly, by placing $\boldsymbol{R}$ at a proper position $\boldsymbol{r}_c$, it is possible to equate its torque to $\boldsymbol{\tau}$; that is, $\boldsymbol{r}_c \times \boldsymbol{R} = \boldsymbol{\tau}$. Introducing the expressions for $\boldsymbol{R}$ and $\boldsymbol{\tau}$ given above, we may write

$$\boldsymbol{r}_c \times \boldsymbol{u}(\sum_i F_i) = (\sum_i \boldsymbol{r}_i F_i) \times \boldsymbol{u}$$

or

$$[\boldsymbol{r}_c(\sum_i F_i)] \times \boldsymbol{u} = (\sum_i \boldsymbol{r}_i F_i) \times \boldsymbol{u}.$$

This equation is satisfied if $\boldsymbol{r}_c(\sum_i F_i) = \sum_i \boldsymbol{r}_i F_i$ or

$$\boldsymbol{r}_c = \frac{\sum_i \boldsymbol{r}_i F_i}{\sum_i F_i} = \frac{\boldsymbol{r}_1 F_1 + \boldsymbol{r}_2 F_2 + \cdots}{F_1 + F_2 + \cdots}. \tag{4.17}$$

The point defined by $\boldsymbol{r}_c$ above is called the *center of parallel forces.* We conclude that a system of parallel forces can be reduced to a single force, parallel to each of the forces, given by Eq. (4.15), and acting on the point given by Eq. (4.17).

The vector equation (4.17) can be separated into its three component equations:

$$x_c = \frac{\sum_i x_i F_i}{\sum_i F_i}, \qquad y_c = \frac{\sum_i y_i F_i}{\sum_i F_i}, \qquad z_c = \frac{\sum_i z_i F_i}{\sum_i F_i}, \tag{4.18}$$

where we have designated by x_c, y_c, and z_c the coordinates of the point defined by $\boldsymbol{r}_c$.

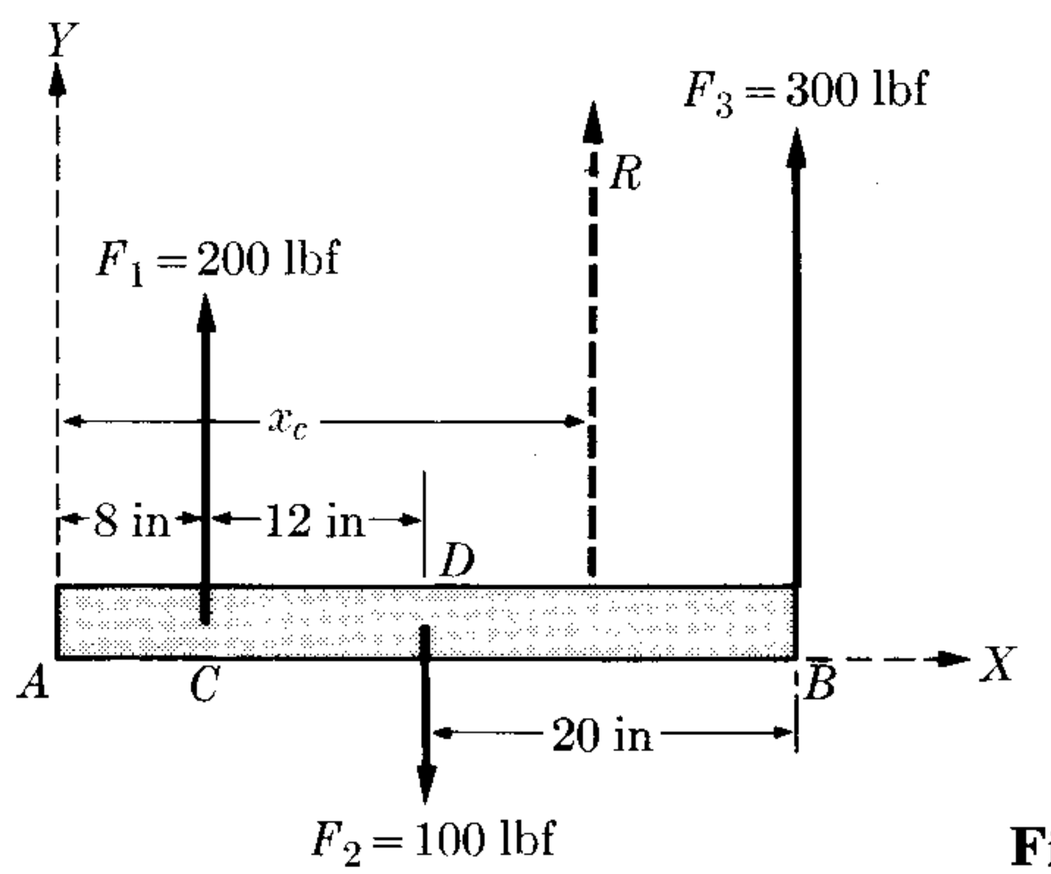

Figure 4–11

EXAMPLE 4.6. Find the resultant of the forces acting on the bar of Fig. 4–11.

Solution: Taking the upward direction as positive and using Eq. (4.16), we find the resultant to be

$$R = \sum_i F_i = F_1 - F_2 + F_3 = 400 \text{ lbf}.$$

To determine its point of application we use Eq. (4.18). Only the first equation is required, since all the forces are on a line. Taking point A as the origin, we obtain

$$x_c = \frac{\sum_i F_i x_i}{\sum_i F_i}$$

$$= \frac{(200 \text{ lbf})(8 \text{ in}) + (-100 \text{ lbf})(20 \text{ in}) + (300 \text{ lbf})(40 \text{ in})}{400 \text{ lbf}} = 29 \text{ in.}$$

The point taken as the origin is immaterial. To show that this is so, let us take point D as the origin. Then

$$x_c = \frac{(200 \text{ lbf})(-12 \text{ in}) + (-100 \text{ lbf})(0 \text{ in}) + (300 \text{ lbf})(20 \text{ in})}{400 \text{ lbf}} = 9 \text{ in.}$$

This point is exactly the same as before, since $AD = 20$ in.

4.8 Center of Mass

Every particle subject to the earth's gravitational field is acted on by a force $\boldsymbol{W}$, called its weight. The direction of this force, if extended, passes through the center of the earth. In Section 7.6, it will be seen that when m is the mass of the particle and g the acceleration due to gravity, the following relation exists:

$$\boldsymbol{W} = m\boldsymbol{g}. \tag{4.19}$$

Although the weights intersect at the center of the earth, they may be considered parallel when they act on particles comprising a body of relatively small dimensions. Therefore the resultant weight of a body is given by $W = \sum_i m_i g$, where the sum extends over all particles comprising the body, and is applied at a point given by

$$\boldsymbol{r}_c = \frac{\sum_i \boldsymbol{r}_i m_i g}{\sum_i m_i g} = \frac{\sum_i m_i \boldsymbol{r}_i}{\sum_i m_i}, \tag{4.20}$$

in accordance with Eq. (4.17). Using Eq. (4.18), we may write the components of Eq. (4.20) as

$$x_c = \frac{\sum_i m_i x_i}{\sum_i m_i}, \qquad y_c = \frac{\sum_i m_i y_i}{\sum_i m_i}, \qquad z_c = \frac{\sum_i m_i z_i}{\sum_i m_i}, \tag{4.21}$$

A point defined by Eqs. (4.20) or (4.21) is called the *center of mass* of the system of particles, abbreviated CM.* The concept of center of mass is important not only in relation to the composition of parallel forces. It also plays an essential role in the analysis of the motion of a system of particles and, in particular, of a rigid body, as will be seen in Chapters 9 and 10.

---

* Actually the weight is applied at a slightly different point called the *center of gravity*. For practical purposes there is no difference between the points unless the body is very large.

TABLE 4–1 Centers of Mass

Figure	Position of CM
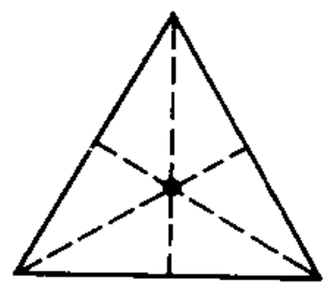	*Triangular plate* Point of intersection of the three medians
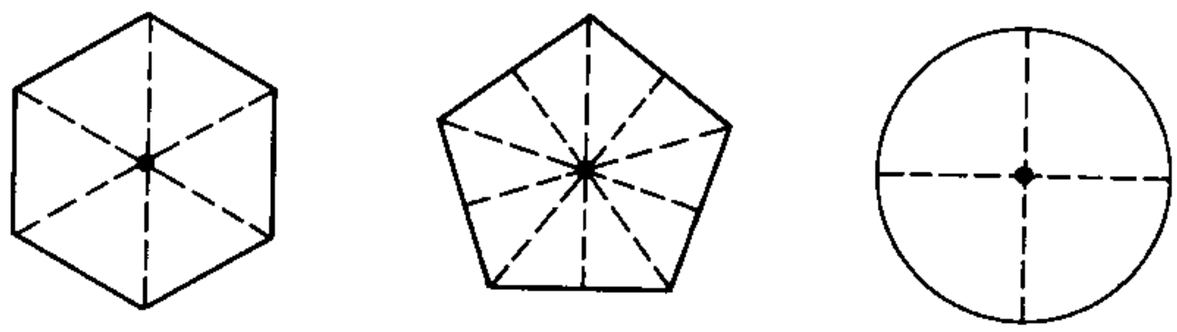	*Regular polygon and circular plate* At the geometrical center of the figure
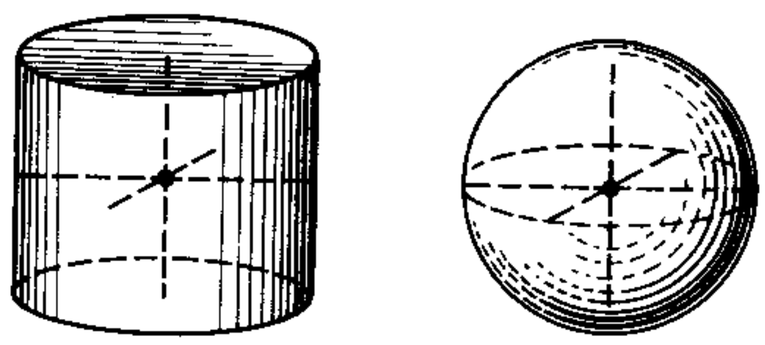	*Cylinder and sphere* At the geometrical center of the figure
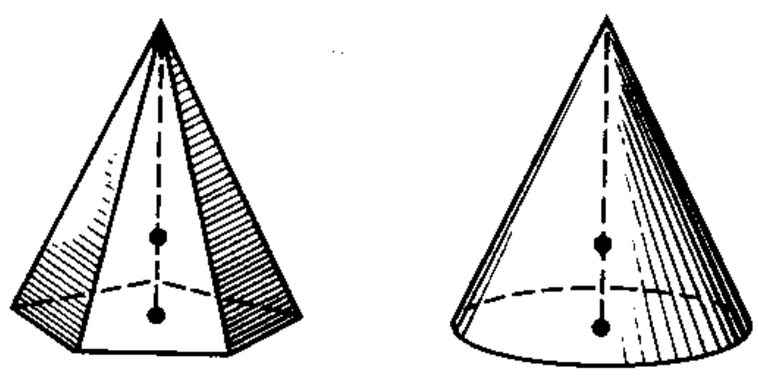	*Pyramid and cone* On line joining vertex with center of base and at $\frac{1}{4}$ of the length measured from the base
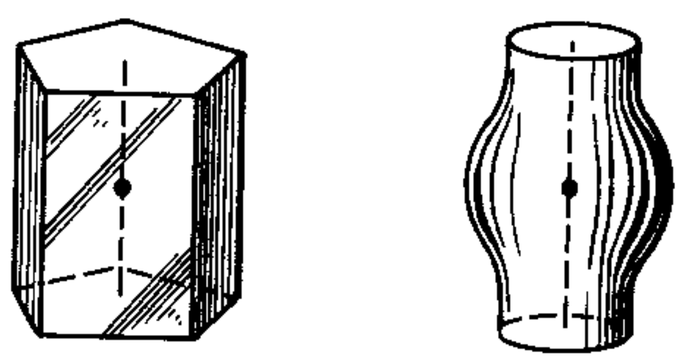	*Figure with axial symmetry* Some point on the axis of symmetry
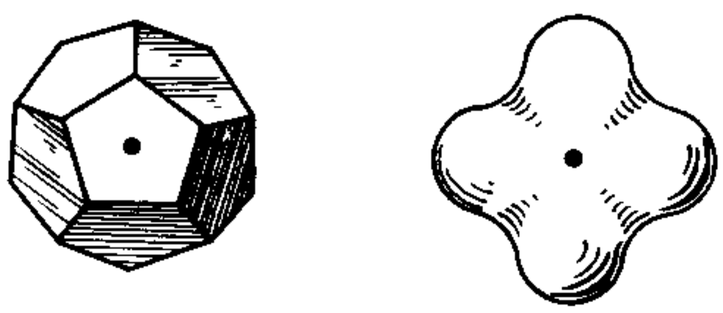	*Figure with center of symmetry* At the center of symmetry

Considering a body composed of a large number of particles, all very compact, we may assume that it has a continuous structure. If ρ is its density at each point, we may divide the volume into volume elements dV, and the mass in each will be $dm = \rho\, dV$. Therefore, when we replace the sums in Eq. (4.21) by integrals, the center of mass is given by

$$x_c = \frac{\int \rho x\, dV}{\int \rho\, dV}, \qquad y_c = \frac{\int \rho y\, dV}{\int \rho\, dV}, \qquad z_c = \frac{\int \rho z\, dV}{\int \rho\, dV}. \tag{4.22}$$

If the body is homogeneous, ρ is constant and cancels out from Eqs. (4.22), resulting in

$$x_c = \frac{\int x\, dV}{\int dV} = \frac{\int x\, dV}{V}, \tag{4.23}$$

with similar equations for y_c and z_c. In this case the center of mass is determined exclusively by the geometry of the body.*

When the homogeneous body has some symmetry, the calculation is simplified because the center of mass must coincide with the symmetry element. If a body has a *center* of symmetry, such as a sphere, a parallelepiped, etc., the center of mass coincides with it. If the body has an *axis* of symmetry, such as a cone, the center of mass is on the axis. (See Table 4–1.)

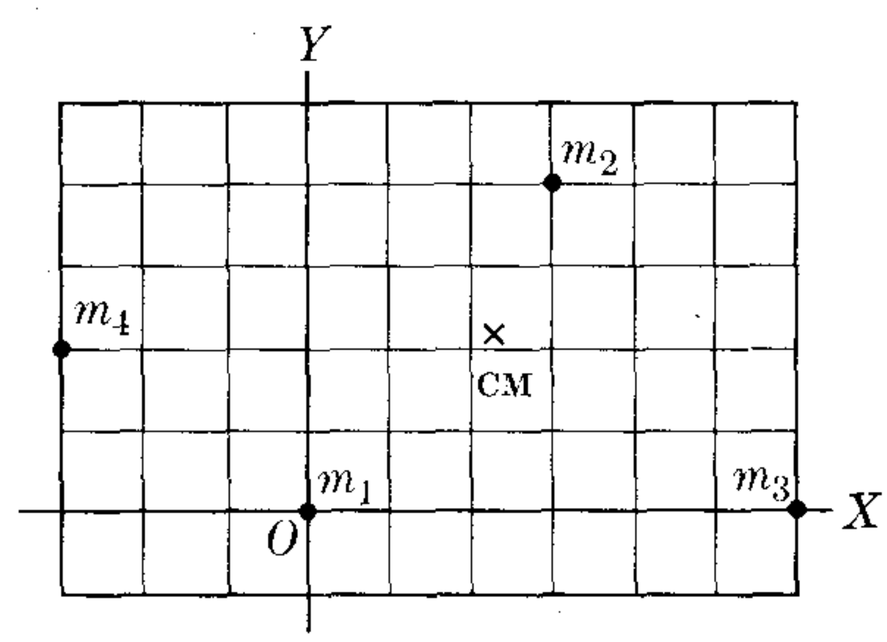

Figure 4–12

EXAMPLE 4.7. Find the center of mass of the particles located as shown in Fig. 4–12. The values of the masses are $m_1 = 5$ kg, $m_2 = 30$ kg, $m_3 = 20$ kg, $m_4 = 15$ kg. The side of each square is 5 cm.

Solution: We must find first the total mass m:

$$m = \sum_i m_i = 5\text{ kg} + 30\text{ kg} + 20\text{ kg} + 15\text{ kg} = 70\text{ kg}.$$

Next we apply the first and second equations of (4.21). We omit the units for brevity. The result is

$$x_c = \frac{(5)(0) + (30)(15) + (20)(30) + (15)(-15)}{70} = 11.8\text{ cm},$$

$$y_c = \frac{(5)(0) + (30)(20) + (20)(0) + (15)(10)}{70} = 10.7\text{ cm}.$$

The center of mass is thus located at the point indicated by CM in Fig. 4–12.

---

* For the technique of computing the center of mass, see any calculus text; for example, *Calculus and Analytic Geometry*, third edition, by G. B. Thomas. Reading, Mass.: Addison-Wesley, 1962, Sections 5–9, 15–3, and 15–6.

4.9 Statics. Equilibrium of a Particle

Statics is the branch of mechanics that deals with the equilibrium of bodies. A particle is in equilibrium if the sum of all the forces acting on it is zero; that is,

$$\sum_i \boldsymbol{F}_i = 0. \tag{4.24}$$

The above equation is equivalent to

$$\sum_i F_{ix} = 0; \qquad \sum_i F_{iy} = 0; \qquad \sum_i F_{iz} = 0. \tag{4.25}$$

We shall now illustrate how to solve some simple problems involving equilibrium of a particle.

EXAMPLE 4.9. Discuss the equilibrium of three forces acting on a particle.

Solution: We shall consider the three forces illustrated in Fig. 4–13. If the forces are in equilibrium, it means that

$$\boldsymbol{F}_1 + \boldsymbol{F}_2 + \boldsymbol{F}_3 = 0,$$

so that if we draw a polygon with the three forces we must obtain a triangle, as shown in Fig. 4–14. This indicates that the three concurrent forces in equilibrium must be in one plane. Also, applying the Law of Sines (M.15) to this triangle, we get

$$\frac{F_1}{\sin\alpha} = \frac{F_2}{\sin\beta} = \frac{F_3}{\sin\gamma}, \tag{4.26}$$

which is a very useful formula relating the magnitudes of the forces and the angles between them.

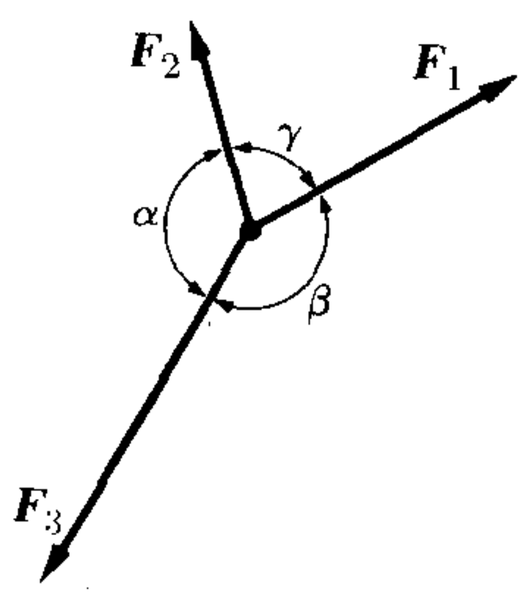

Figure 4–13

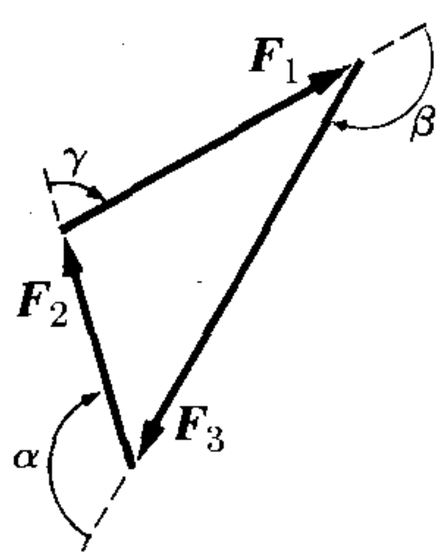

Figure 4–14

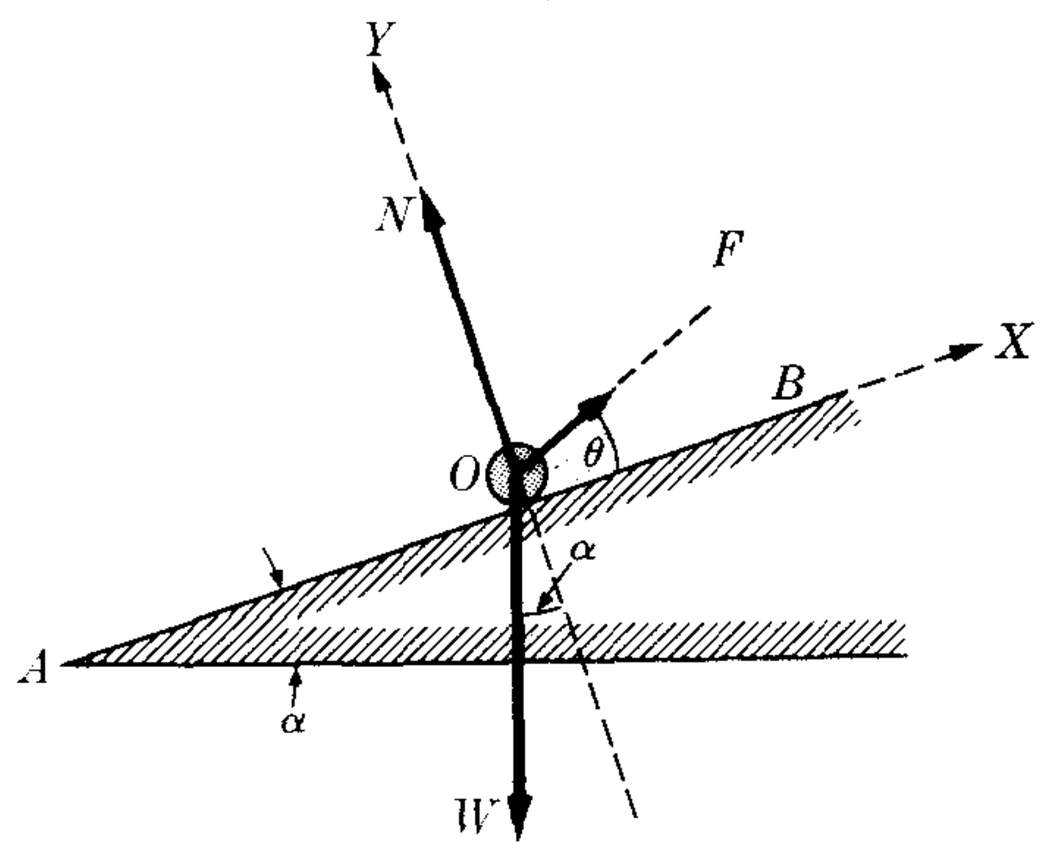

Fig. 4–15. Equilibrium on an inclined plane.

EXAMPLE 4.10. Discuss the equilibrium of a particle on a smooth inclined plane.

Solution: The particle O resting on inclined plane AB (Fig. 4–15) is subject to the following forces: its weight $\boldsymbol{W}$, the pull $\boldsymbol{F}$, and the normal reaction of the plane $\boldsymbol{N}$. We wish to express $\boldsymbol{F}$ and $\boldsymbol{N}$ in terms of $\boldsymbol{W}$, α, and θ. We may proceed in two different ways.

Using the Law of Sines, Eq. (4.26), and considering the geometry of Fig. 4–15, we have

$$\frac{F}{\sin(180^\circ - \alpha)} = \frac{N}{\sin(90^\circ + \alpha + \theta)} = \frac{W}{\sin(90^\circ - \theta)}$$

or

$$\frac{F}{\sin\alpha} = \frac{N}{\cos(\alpha + \theta)} = \frac{W}{\cos\theta},$$

giving for F and N

$$F = \frac{W\sin\alpha}{\cos\theta}, \qquad N = \frac{W\cos(\alpha + \theta)}{\cos\theta}.$$

As an alternative procedure, we may introduce axes X and Y as shown in the figure and apply the first two equations of (4.25). The result is

$$\sum_i F_{ix} = F\cos\theta - W\sin\alpha = 0,$$
$$\sum_i F_{iy} = F\sin\theta - W\cos\alpha + N = 0.$$

From the first we obtain

$$F\cos\theta = W\sin\alpha \qquad \text{or} \qquad F = \frac{W\sin\alpha}{\cos\theta},$$

in agreement with our previous result. From the second, using the expression already found for F, we have

$$N = W\cos\alpha - F\sin\theta = W\cos\alpha - \frac{W\sin\alpha\sin\theta}{\cos\theta}$$
$$= W\frac{\cos\alpha\cos\theta - \sin\alpha\sin\theta}{\cos\theta} = W\frac{\cos(\alpha + \theta)}{\cos\theta},$$

which again is the previously obtained result. The student must decide, in each particular problem, which method is more direct or convenient.

4.10 Statics. Equilibrium of a Rigid Body

When forces are acting on a rigid body, it is necessary to consider equilibrium relative to both translation and rotation. Therefore the two following conditions are required:

I. The sum of all the forces must be zero (translational equilibrium):

$$\sum_i \boldsymbol{F}_i = 0. \tag{4.27}$$

II. The sum of all the torques relative to any point must be zero (rotational equilibrium):

$$\sum_i \boldsymbol{\tau}_i = 0. \tag{4.28}$$

If the forces are all in one plane, the above conditions reduce to the following three algebraic equations:

$$\sum_i F_{ix} = 0, \qquad \sum_i F_{iy} = 0, \qquad \sum_i \tau_i = 0. \tag{4.29}$$

Since these are three simultaneous equations, problems in plane statics are determined only if there are three unknown quantities. We now illustrate the technique of solving some typical problems of plane statics.

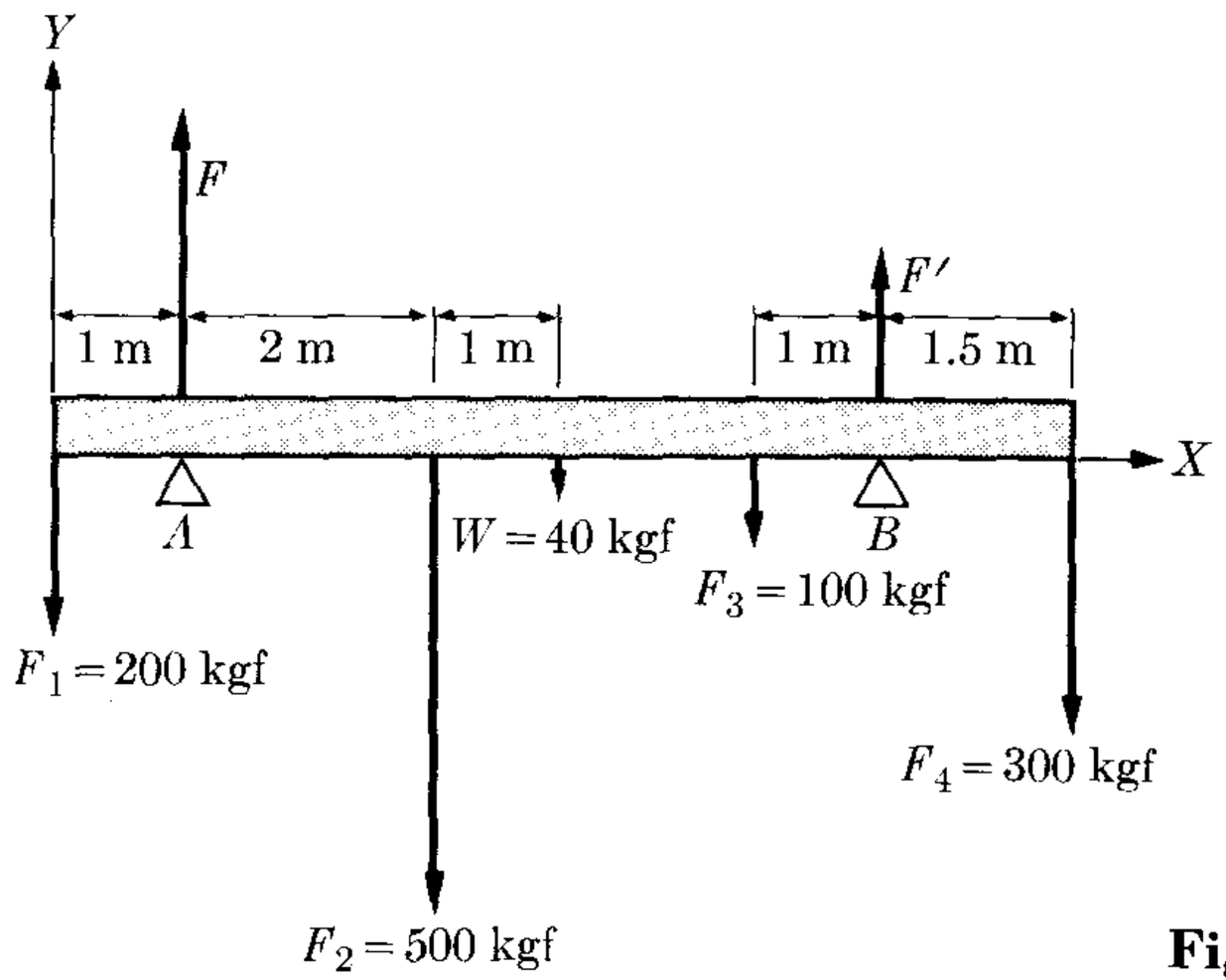

Figure 4–16

EXAMPLE 4.11. The bar of Fig. 4–16 is resting in equilibrium on points A and B, under the action of the forces indicated. Find the forces exerted on the bar at points A and B. The bar weighs 40 kgf and its length is 8 m.

Solution: Applying first the condition (4.27) for translational equilibrium, we have

$$\sum F_i = F + F' - 200 - 500 - 40 - 100 - 300 = 0$$

or

$$F + F' = 1140 \text{ kgf}. \tag{4.30}$$

Second, we apply condition (4.28) for rotational equilibrium. It is more convenient to compute the torques relative to A, because in this way the torque of force F is zero. Thus

$$\begin{aligned}\sum_i \tau_i = {} & (-200)(-1) + F(0) + (-500)(2) + (-40)(3) \\ & + (-100)(4.5) + F'(5.5) + (300)(7) = 0\end{aligned}$$

or $F' = 132.7$ kgf. Combining this result with Eq. (4.30), we obtain $F = 1007.3$ kgf, which solves the problem.

EXAMPLE 4.12. A ladder AB weighing 40 lbf rests against a vertical wall, making an angle of 60° with the floor. Find the forces on the ladder at A and B. The ladder is provided with rollers at A so that the friction with the vertical wall is negligible.

Solution: The forces acting on the ladder are illustrated in Fig. 4–17. The weight $\boldsymbol{W}$ is at the center C of the ladder. Force $\boldsymbol{F}_1$ is required to prevent the ladder from sliding and results from friction with the floor. Forces $\boldsymbol{F}_2$ and $\boldsymbol{F}_3$ are the normal reactions at the floor and the vertical wall. Using the three conditions of equilibrium, as stated in Eq. (4.29), we have

$$\begin{aligned} \sum F_{ix} &= -F_1 + F_3 = 0, \\ \sum F_{iy} &= -W + F_2 = 0. \end{aligned} \tag{4.31}$$

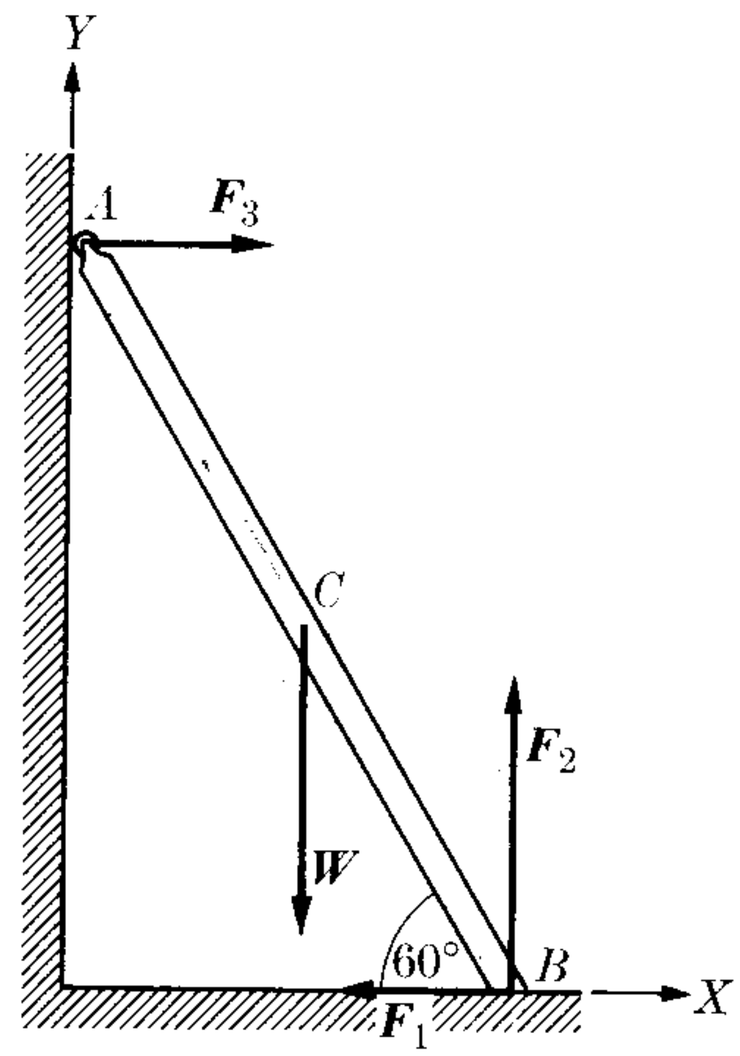

Figure 4–17

Calling L the length of the ladder and taking torques around B so that the torques of the unknown forces $\boldsymbol{F}_1$ and $\boldsymbol{F}_2$ are zero, we have for the third equation of equilibrium,

$$\sum \tau_i = W(\tfrac{1}{2}L \cos 60°) - F_3(L \sin 60°) = 0$$

or

$$F_3 = \frac{W \cos 60°}{2 \sin 60°} = 11.52 \text{ lbf}.$$

Then Eqs. (4.31) give

$$F_1 = F_3 = 11.52 \text{ lbf}$$

and

$$F_2 = W = 40 \text{ lbf}.$$

Note that if the ladder has no roller at A, a frictional force parallel to the vertical wall is also present at A. Thus we have four unknown forces, and some additional assumption is required to solve the problem.

References

1. *Mechanics* (second edition), by K. Symon. Reading, Mass.: Addison-Wesley, 1964, Section 3–2
2. *Physical Mechanics* (third edition), by R. Lindsay. Princeton, N.J.: Van Nostrand, 1963, Section 1–7
3. *Vector Mechanics*, by D. Christie. New York: McGraw-Hill, 1964, Chapters 3, 4, 10, and 11
4. *Introduction to Engineering Mechanics*, by J. Huddleston. Reading, Mass.: Addison-Wesley, 1961, Chapters 3, 5, 6, and 8
5. *The Feynman Lectures on Physics*, Volume I, by R. Feynman, R. Leighton, and M. Sands. Reading, Mass.: Addison-Wesley, 1963, Chapter 12
6. *Foundations of Modern Physical Science*, by G. Holton and D. H. D. Roller. Reading, Mass.: Addison-Wesley, 1958, Chapter 4

Problems

4.1 A telephone pole is held in a vertical position by means of a cable that is fixed on the pole at a height of 10 m and also fixed to the ground 7 m from the base of the pole. If the tension in the cable is 500 lbf, what are the horizontal and vertical forces exerted on the pole by the cable?

4.2 A block weighing 6 kgf is on a smooth horizontal surface. It is pushed with a stick (which forms a 30° angle with the horizontal) by a force of 6 kgf. (a) What is the total perpendicular force exerted on the surface? (b) What is the force parallel to the surface?

4.3 An inclined plane is 2 m high and 5 m long. There is a stone block (weight 10 kgf) on the plane, held in place by a fixed obstacle. Find the force exerted by the block (a) on the plane and (b) on the obstacle.

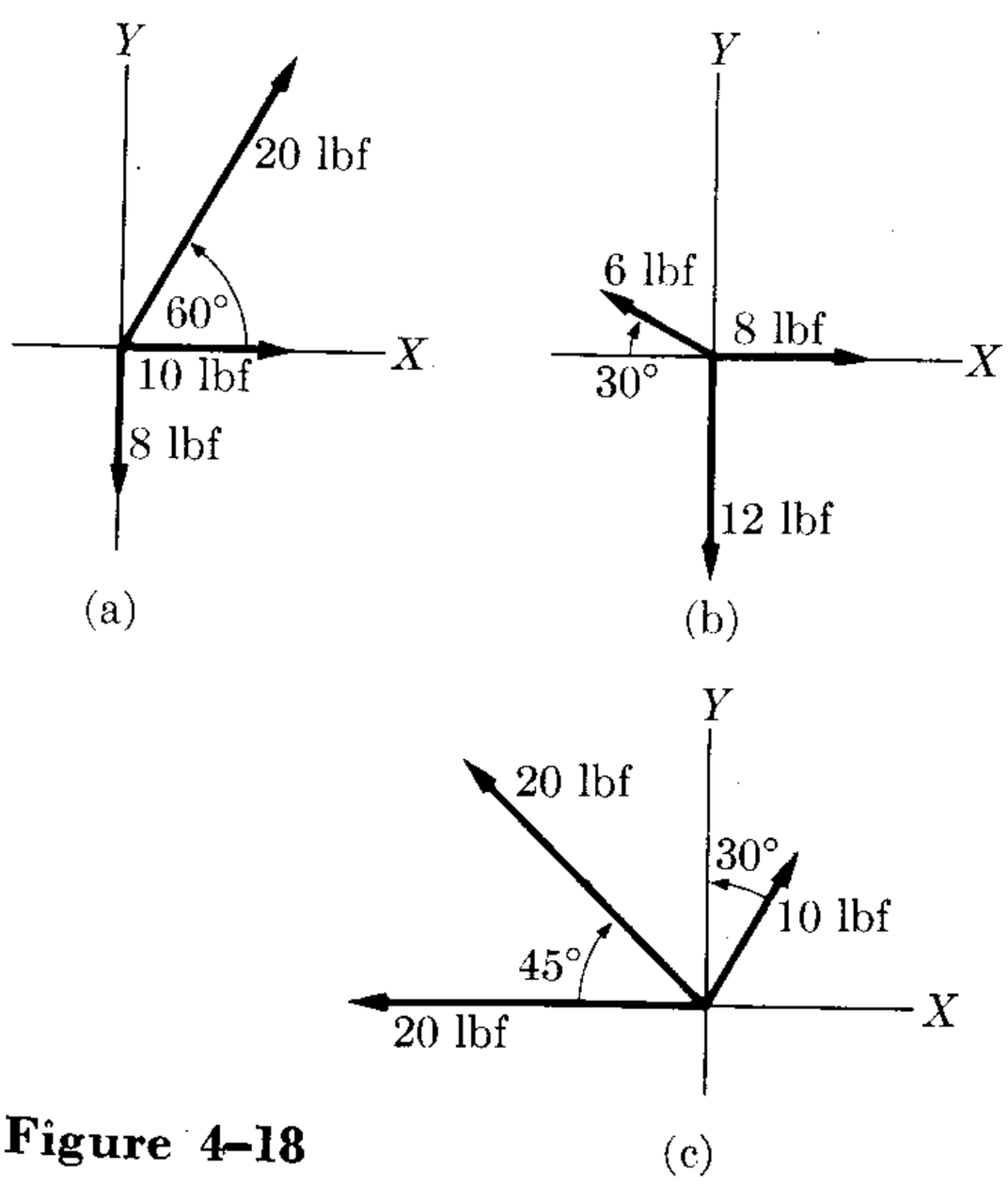

Figure 4–18

4.4 Find the magnitude and direction of the resultant of the system of forces repreted in Fig. 4–18.

4.5 Four coplanar forces (30 N, 40 N, 20 N, and 50 N) are all acting concurrently on a body. The angles between the forces are, consecutively, 50°, 30°, and 60°. Calculate the magnitude of the resultant force and the angle it makes with the 30-N force.

4.6 Given the following three forces: $\boldsymbol{F}_1 = \boldsymbol{u}_x(500)$ lbf; $\boldsymbol{F}_2 = \boldsymbol{u}_x(0) + \boldsymbol{u}_y(-200) + \boldsymbol{u}_z(100)$ lbf; $\boldsymbol{F}_3 = \boldsymbol{u}_x(-100) + \boldsymbol{u}_y(50) + \boldsymbol{u}_z(-400)$ lbf. (a) Determine the magnitude and direction of the resultant force. (b) Determine the resultant torque of the above forces, if they are all applied at the point (4, −3, 15), with respect to the origin O. Use the resultant force to determine the resultant torque.

4.7 Find the torque, with respect to the origin O, of each force given in Problem 4.6, when each is applied at the point (4, −3, 15). Prove that the resultant torque is perpendicular to the resultant force.

4.8 (a) Find the resultant torque about point O of the forces listed in Problem 4.6 when they are applied at different points: $\boldsymbol{F}_1$ at (3, 8, 10); $\boldsymbol{F}_2$ at (−2, 0, 4); $\boldsymbol{F}_3$ at (4, −25, 10). (b) Find $\boldsymbol{R} \cdot \boldsymbol{\tau}$ and indicate the minimum reduction of the system.

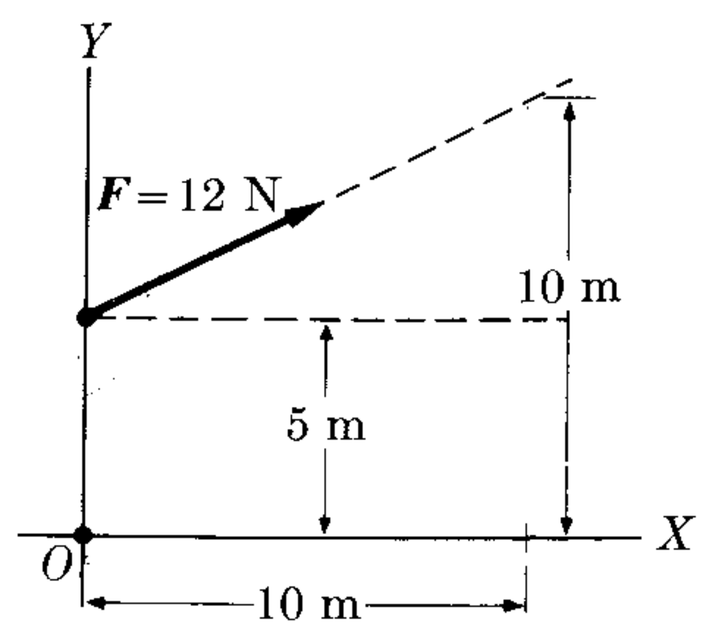

Figure 4–19

4.9 Calculate the torque of the force in Fig. 4–19 with respect to the origin. Determine the equation of the line of action of the force.

4.10 Determine (Fig. 4–20) the resultant force and resultant torque about O of three forces, 50 N, 80 N, and 100 N, all

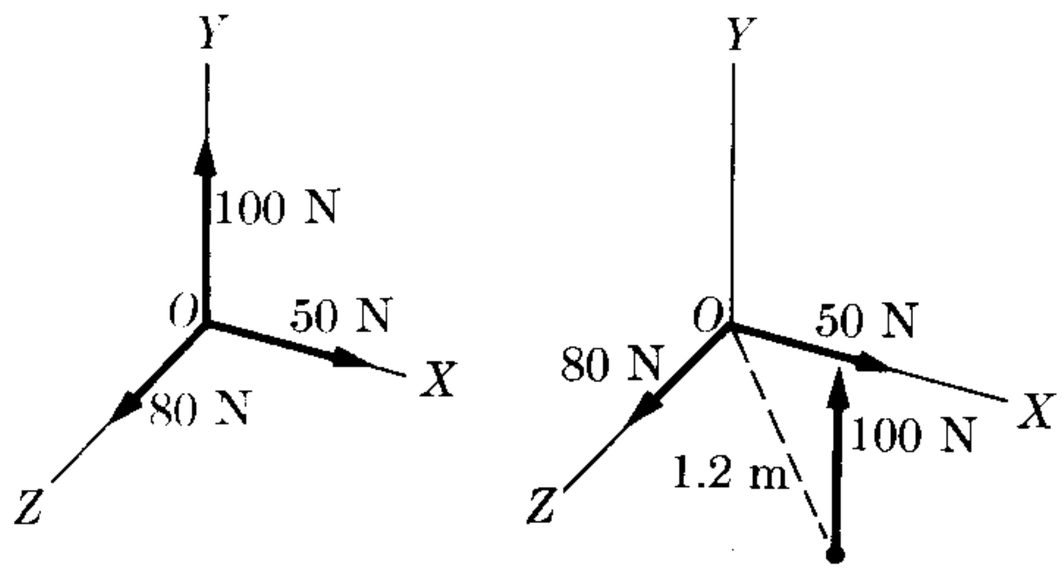

Figure 4–20

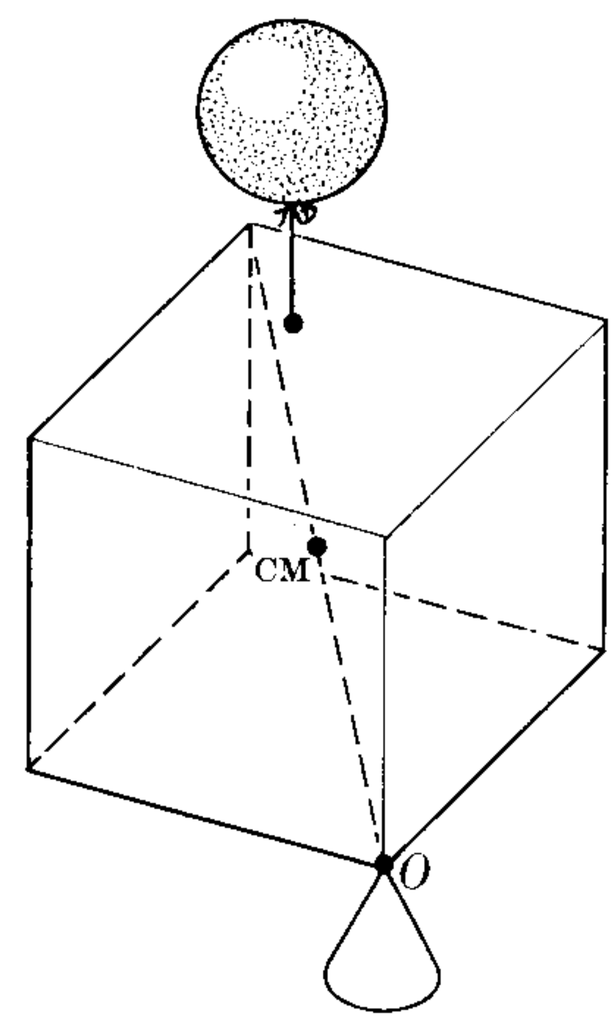

Figure 4–21

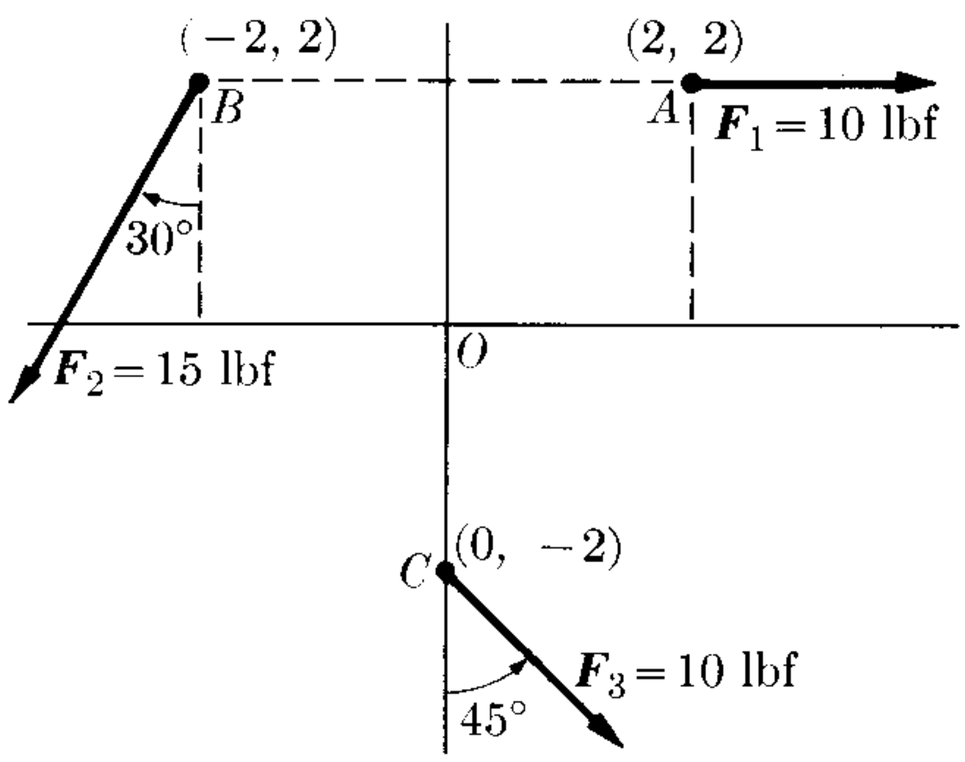

Figure 4–22

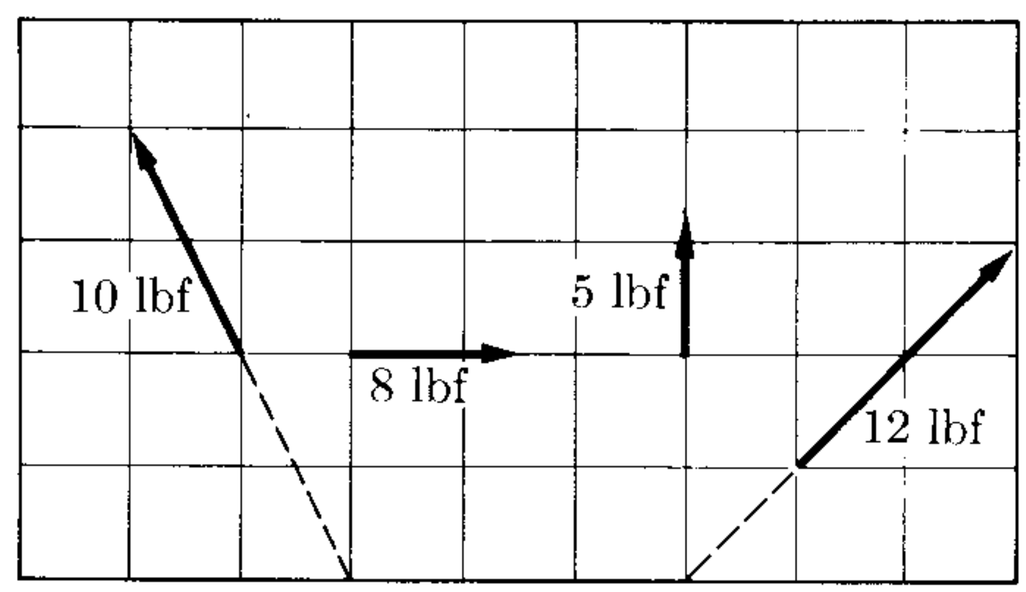

Figure 4–23

mutually perpendicular to one another (a) if they are concurrent; (b) if the line of action of the 100-N force is 1.2 m from the point of concurrency of the other two.

4.11 A rigid rectangle $ABCD$, with $AB = CD = 0.4$ m and $BC = DA = 0.6$ m, has five forces acting on it: at A, a 6-N force acting in the direction AB, a 4-N force acting along AC, and a 3-N force acting along AD; at C, a 5-N force acting in direction CD and a 4-N force acting in the direction CB. Determine the resultant force, also the torque with respect to points A, B, and the geometric center.

4.12 Two parallel forces, with the same sense, are 0.2 m apart. If one of the forces is 13 N and the resultant has a line of action 0.08 m from the other force, find (a) the magnitude of the resultant and (b) the magnitude of the other force.

4.13 Two parallel forces, with the same sense, have magnitudes of 20 N and 30 N. The distance from the line of action of the resultant to the larger force is 0.8 m. Find the distance between the forces.

4.14 Solve the previous two problems, assuming that the forces have opposite senses.

4.15 A cube of uniform density, which weighs 10 lbf and is 2 ft on each side, rests on a point at one of its vertices (Fig. 4–21). Where must a gas-filled balloon (that has an upward lifting capability of 8 lbf) be attached so that the cube "floats" in the horizontal position shown in the figure? What is the force at O?

4.16 Find the magnitude and position of the resultant of the system of forces represented in Fig. 4–22. The coordinates of the points A, B, and C are given in feet.

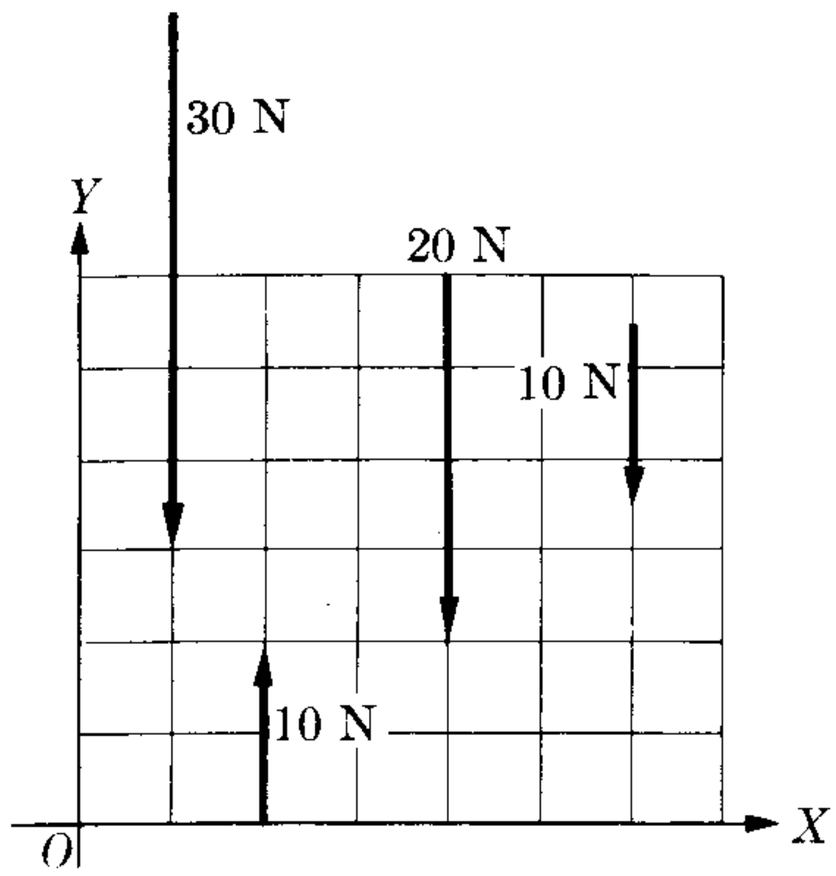

Figure 4–24

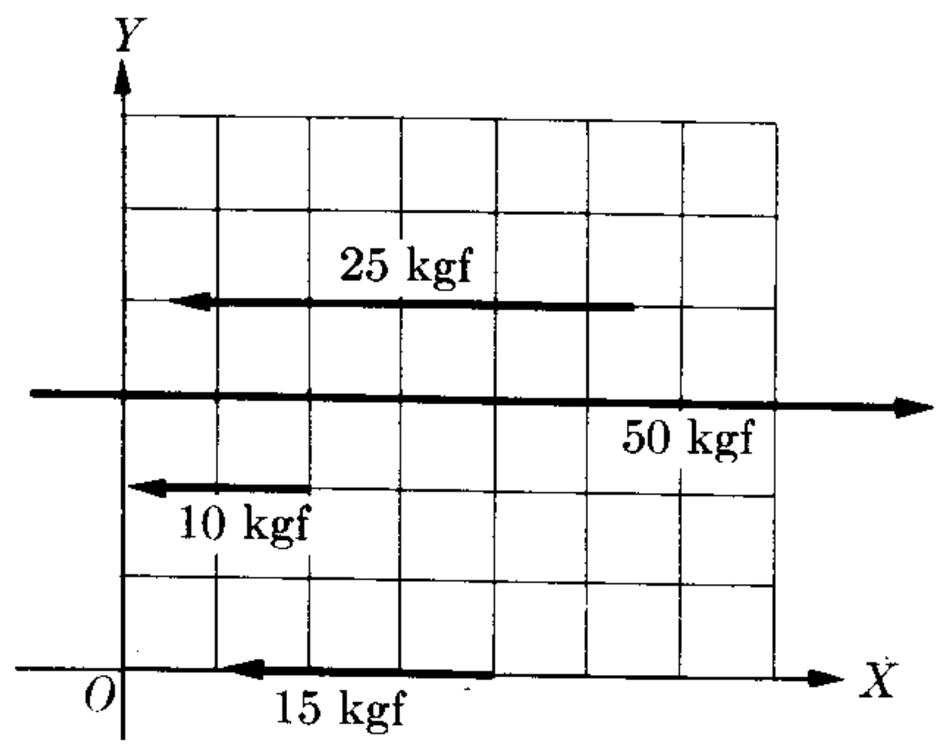

Figure 4–25

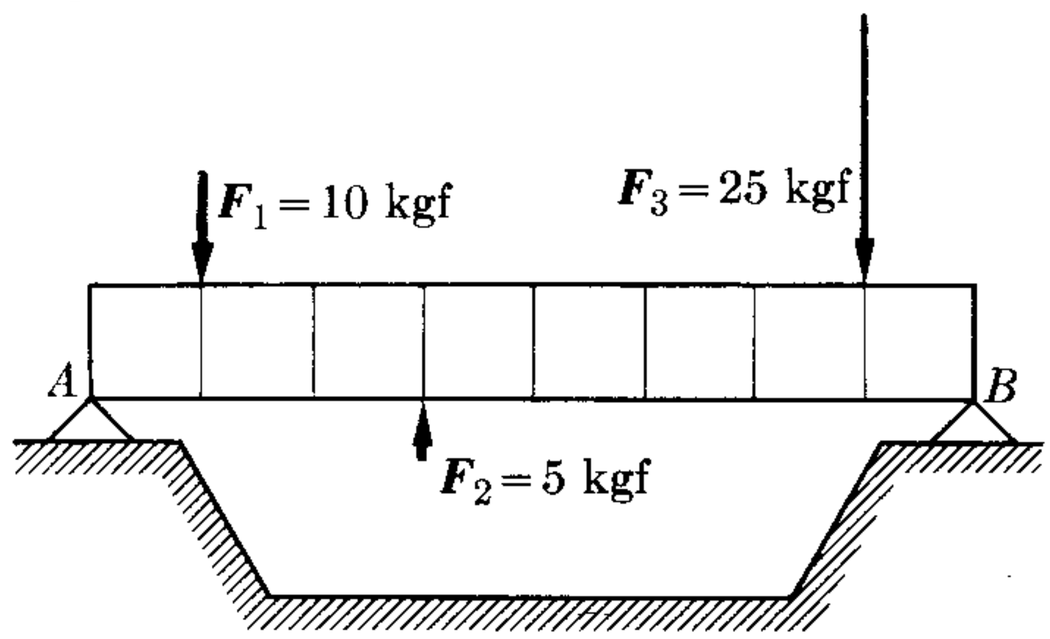

Figure 4–26

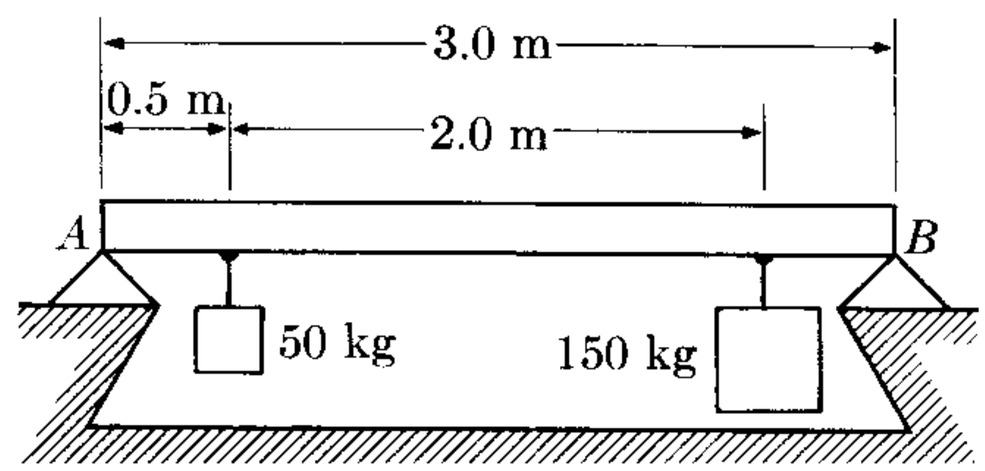

Figure 4–27

4.17 Find the magnitude and position of the resultant of the forces represented in Fig. 4–23. Each square is 1 ft on a side.

4.18 Reduce the system of forces in Fig. 4–24.

4.19 Reduce the system of forces represented in Fig. 4–25. Squares are 1 cm^2.

4.20 Prove that if $\boldsymbol{R} = \sum_i \boldsymbol{F}_i$ is the resultant of a system of concurrent forces and $\boldsymbol{\tau}_0$ is their torque relative to the point 0, the torque relative to A is

$$\boldsymbol{\tau}_A = \boldsymbol{\tau}_0 + \boldsymbol{r}_{A0} \times \boldsymbol{R}.$$

4.21 A stick is 2 m long and its weight is 5 gmf (4900 dynes). There are forces of 3000, 2000, and 1500 dynes acting downward at 0, 50, and 200 cm from one end, and forces of 5000 and 13,000 dynes acting upward at 20 and 100 cm from the same end. Determine the magnitude and line of action of the resultant.

4.22 Find the magnitude and position of the resultant of the system of forces represented in Fig. 4–26. Each segment of the beam AB is 1 decimeter. Also find the force needed at A and B to balance the other forces.

4.23 The beam AB is uniform and has a mass of 100 kg. It is resting on its ends A and B and is supporting the masses, as shown in Fig. 4–27. Calculate the reactions at the supports.

4.24 Determine the tensions on the ropes AC and BC (Fig. 4–28) if M weighs 40 lbf.

4.25 The body represented in Fig. 4–29 weighs 40 kgf. It is held in equilibrium by means of the rope AB and under the action

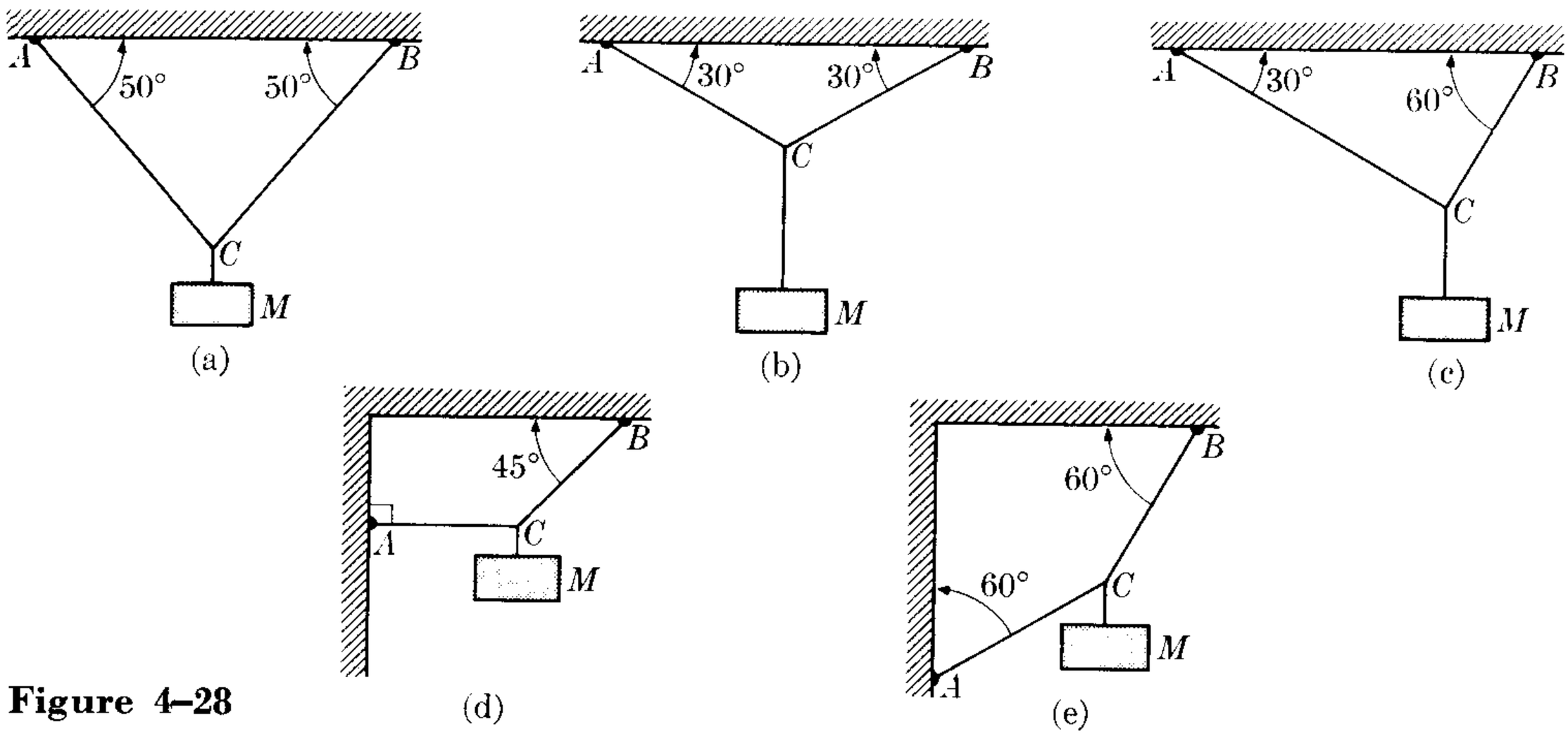

Figure 4–28

of the horizontal force $\boldsymbol{F}$. Given that $AB = 150$ cm and the distance between the wall and the body is 90 cm, calculate the value of the force $\boldsymbol{F}$ and the tension in the rope.

4.26 For Fig. 4–30, calculate the angle θ and the tension in the rope AB if $M_1 = 300$ lbf and $M_2 = 400$ lbf.

4.27 A boy weighing 120 lbf is holding onto a chinning bar. What force does each of his arms exert on the bar when (a) his arms are parallel to each other and (b) each arm makes an angle of 30° with the vertical? Plot the force as a function of the angle. What do you conclude from the graph?

4.28 A rope $ABCD$ is hanging from the fixed points A and D. At B there is a weight of 12 kgf and at C an unknown weight. If the angle of AB with the horizontal is 60°, BC is horizontal, and CD forms an angle of 30° with the horizontal, calculate the value W would have to have in order for the system to be in equilibrium.

4.29 Three ropes, located in a vertical plane, are fixed to different points on a horizontal ceiling. The other extremes are held at a point A, from which a weight W is hanging. The angles formed by the ropes with the horizontal are, respectively, 35°, 100°, and 160°. The tensions in the first two ropes are, respectively, 100 kgf and 75 kgf. Calculate the tension in the third rope, and also the weight W.

4.30 Prove that if three forces are in equilibrium, they must be concurrent; that is, their lines of action, extended, must meet at the same point.

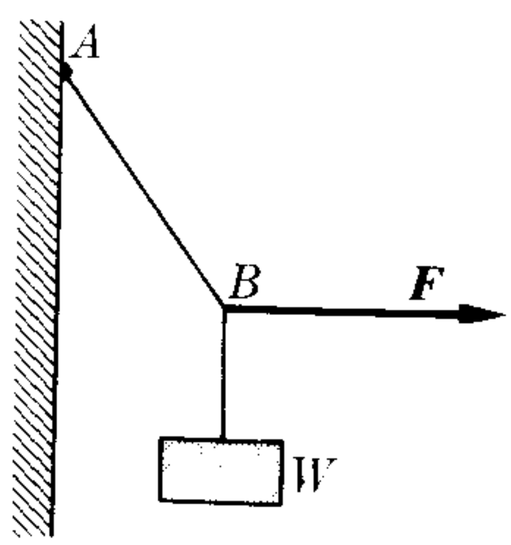

Figure 4–29

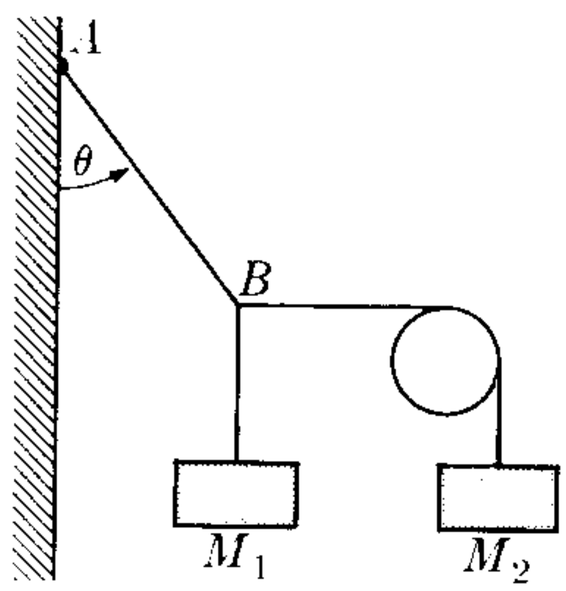

Figure 4–30

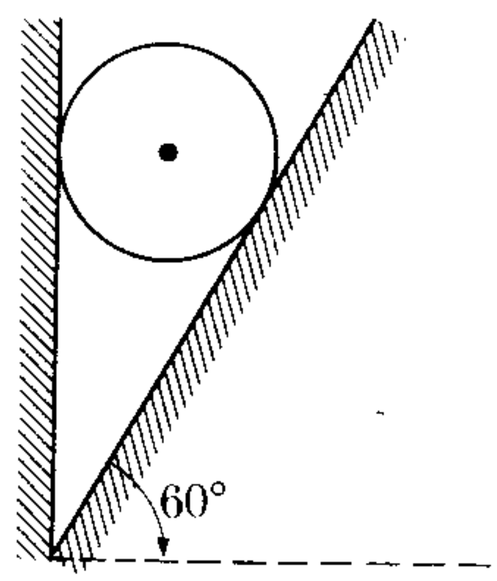

Figure 4–31

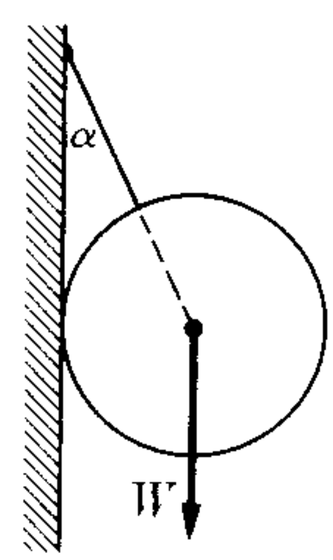

Figure 4–32

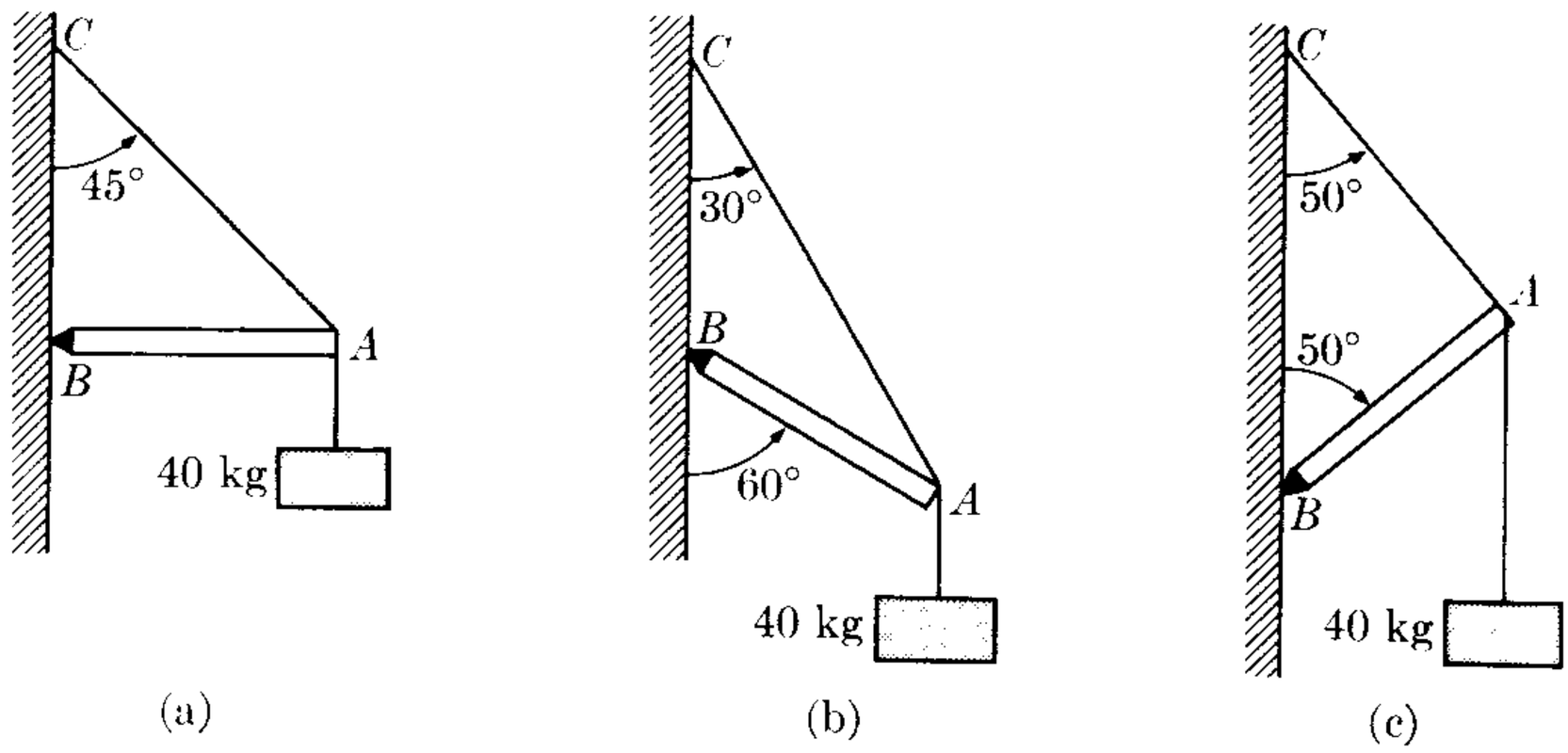

Figure 4–33 (a) (b) (c)

4.31 A sphere whose weight is 50 kgf is leaning on two smooth planes, respectively inclined 30° and 45° with respect to the horizontal. Calculate the reactions of the two planes on the sphere.

4.32 A sphere (Fig. 4–31) weighing 50 lbf is leaning against a smooth wall, held there by a smooth inclined plane that forms a 60° angle with the horizontal. Calculate the reaction of the wall and the plane on the sphere.

4.33 A sphere of weight W is held by the rope AB (Fig. 4–32) and leans on the smooth vertical wall AC. If α is the angle between the rope and the wall, determine the tension in the rope and the reaction of the wall on the sphere.

4.34 Determine the forces (Fig. 4–33) that the beam BA and the cable AC exert on A, assuming that M weighs 40 kgf and the weight of the cable and the beam may be neglected.

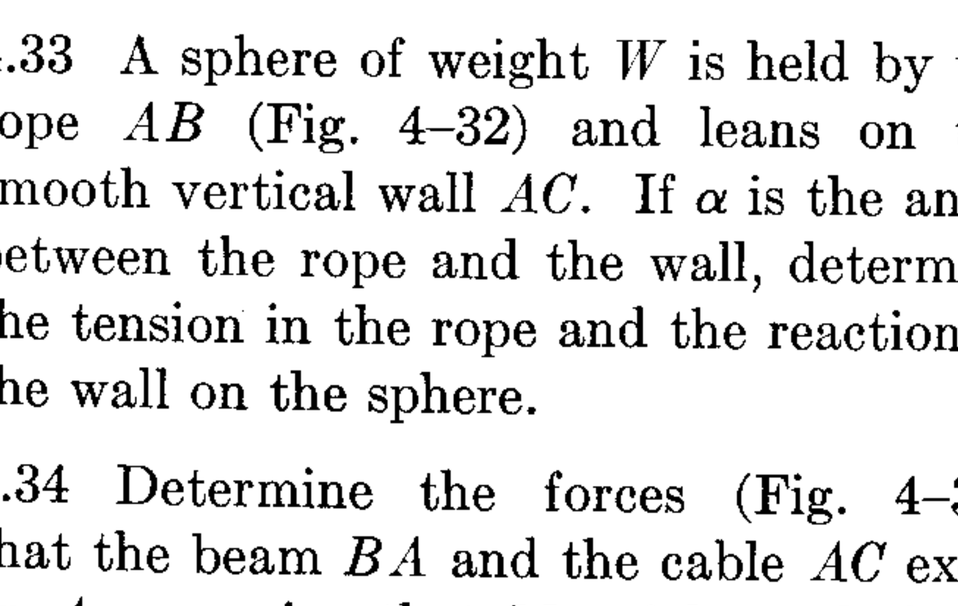

Figure 4–34

4.35 Determine the horizontal and vertical reactions (Fig. 4–33) at the point B and the tension in the cable AC, assuming that the beam has a 20-kg mass.

4.36 Find the forces $\boldsymbol{F}$, $\boldsymbol{F}'$, $\boldsymbol{N}$, and $\boldsymbol{H}$ in Fig. 4–34. CE and DC are cables. Neglect the weight of the boom.

4.37 Discuss the result of the previous problem as the distance $b = AG$ tends toward zero.

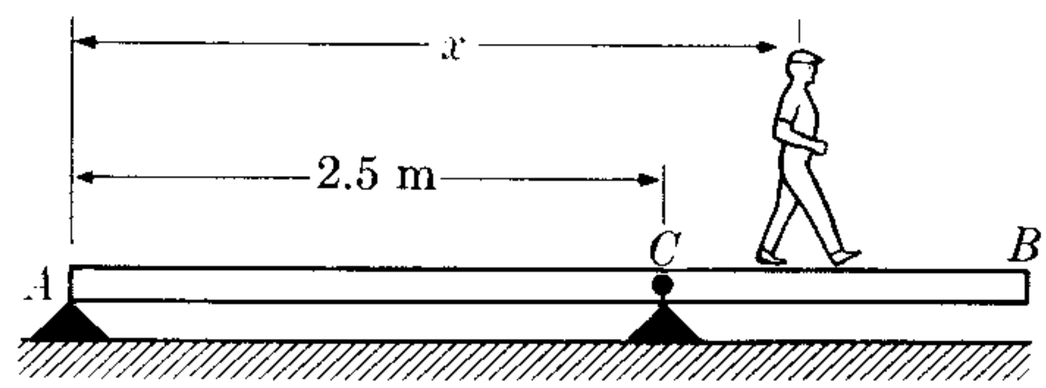

Figure 4–35

4.38 The uniform beam AB in Fig. 4–35 is 4.0 m long and weighs 100 kgf. There is a fixed point C around which the beam can rotate. The beam is resting on point A. A man weighing 75 kgf is walking along the beam, starting at A. Calculate the maximum distance the man can go from A and still maintain equilibrium. Plot the reaction at A as a function of the distance x.

4.39 There are forces acting on the beam AB as shown in Fig. 4–36. Determine the magnitude and position of the resultant.

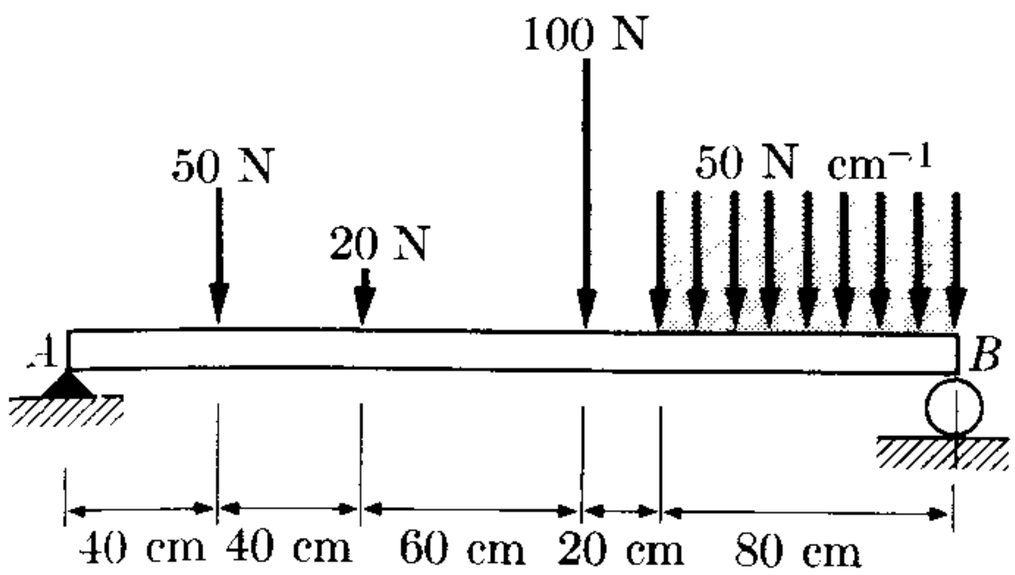

Figure 4–36

4.40 The beam AB in Fig. 4–37 is 1.2 m long and is of negligible weight. The spheres C and D (respectively 40 kg and 20 kg), linked by the beam CD, are resting on it. The distance between the centers of the spheres is 0.3 m. Calculate the distance x so that the reaction at B is $\frac{1}{2}$ of the reaction at A.

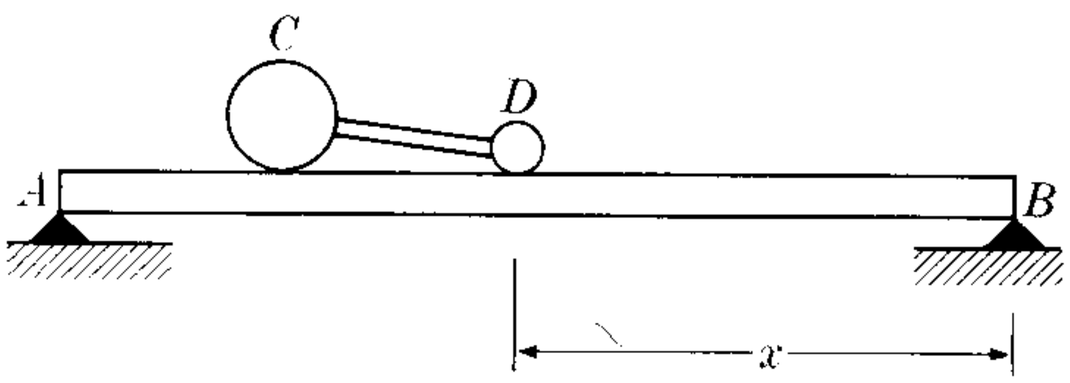

Figure 4–37

4.41 A bridge 100 m long and weighing 10,000 kgf is held up by two columns at its ends. What are the reactions on the columns when there are three cars on the bridge at 30 m, 60 m, and 80 m from one end, whose weights are, respectively, 1500 kgf, 1000 kgf, and 1200 kgf?

4.42 Consider the three cars of Problem 4.41, all moving at the same speed, 10 m s^{-1}, and in the same direction. Plot the reactions of the columns as a function of time, with $t = 0$ at the position given in Problem 4.41. Extend your plot until all cars are off the bridge.

4.43 A 20-kg plank, 8.0 m long, rests on the banks of a narrow creek. A 100-kg man walks across the plank. Plot the reaction at *each* end of the plank as a function of the distance of the man from the end.

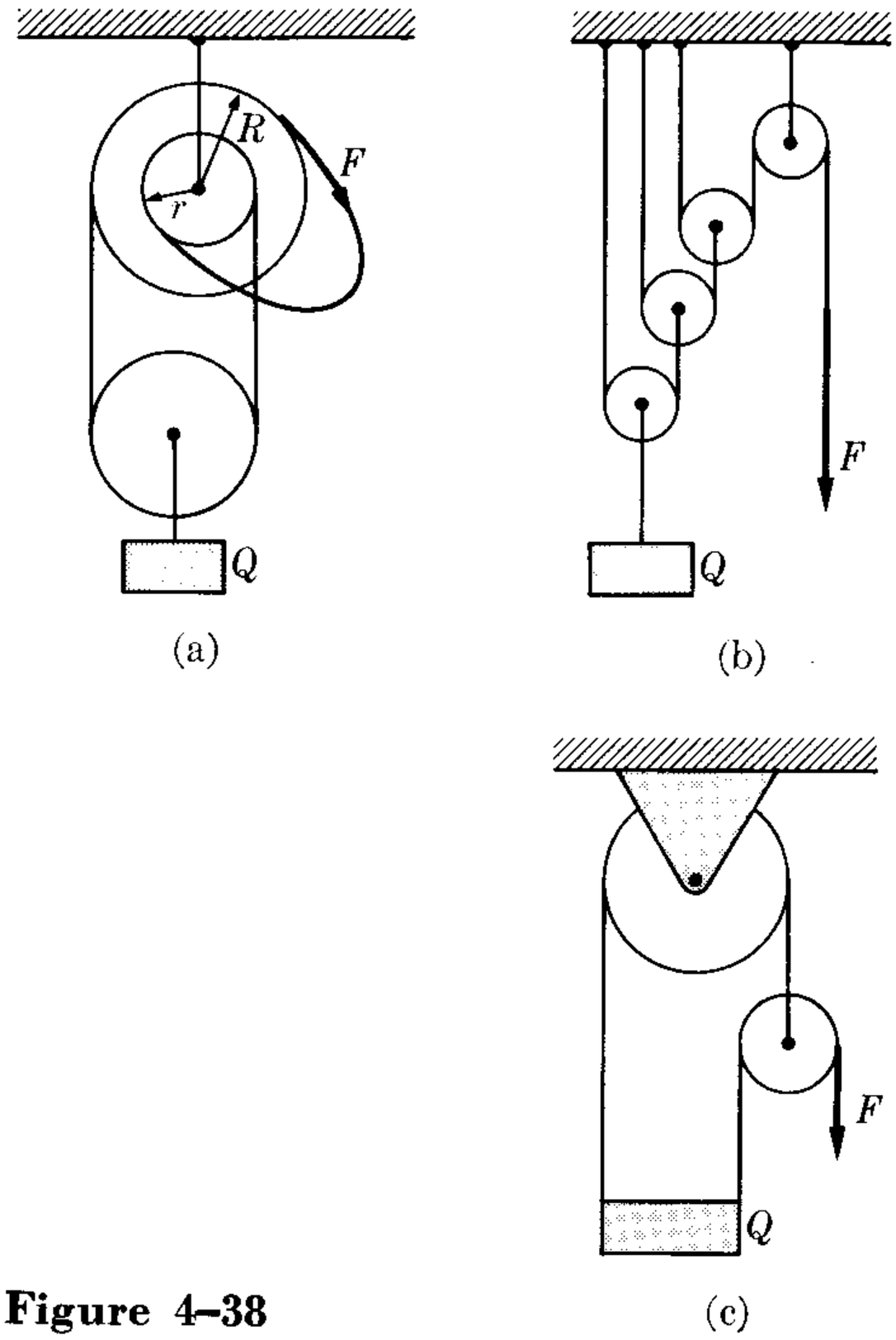

Figure 4–38

4.44 Find the force F needed to maintain equilibrium, in terms of Q, for each case shown in Fig. 4–38. The pulleys marked C are movable.

4.45 Calculate the weight P needed to maintain equilibrium in the system shown in Fig. 4–39, in which A is 100 kgf and Q is 10 kgf. The plane and the pulleys are all smooth. Rope AC is horizontal and rope AB is parallel to the plane. Also calculate the reaction of the plane on the weight A.

4.46 A stick of mass m and length l (Fig. 4–40) is placed into a perfectly smooth

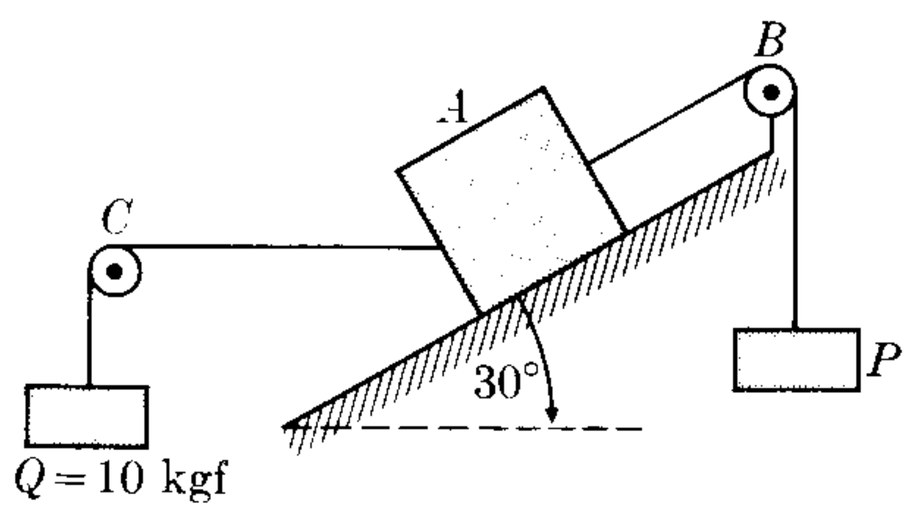

Figure 4–39

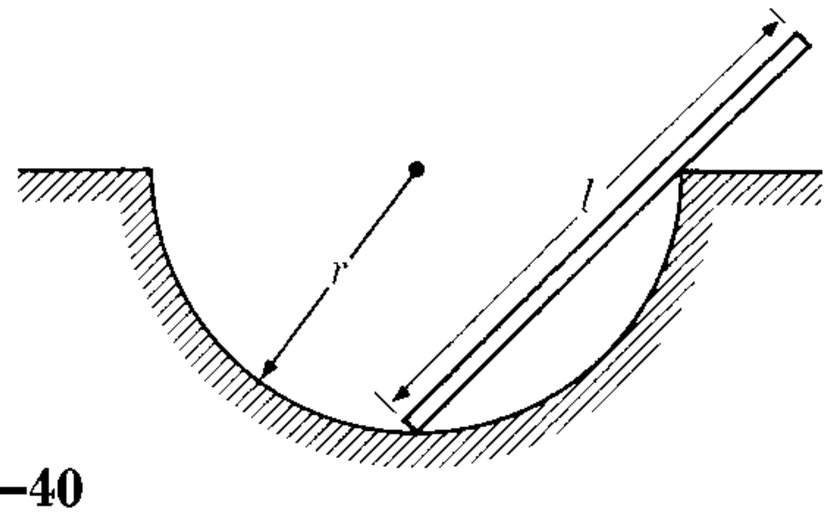

Figure 4–40

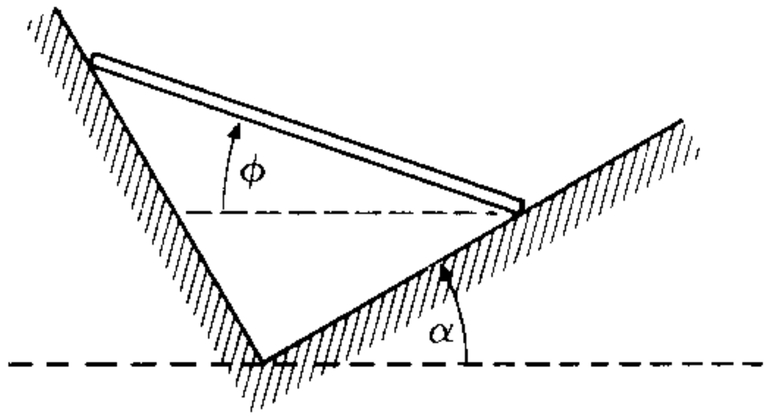

Figure 4–41

hemisphere of radius r. Find the position of equilibrium of the stick. Calculate the reactions of the hemisphere on the stick. Discuss the solution for $l > 2r$ and $l < 2r$.

4.47 A stick of mass 6 kg and length 0.8 m is placed on the smooth right angle shown in Fig. 4–41. Determine the position of equilibrium and the reaction forces as a function of the angle α.

4.48 Two identical spheres are placed in the system shown in Fig. 4–42. Calculate the reactions of the surfaces on the spheres. Show that each sphere is independently in equilibrium.

4.49 Repeat Example 4.12 of the text with a (vertical) frictional force that is always exactly 0.3 F_3. Everything else in the example remains the same.

4.50 Prove that the resultant of the forces F_1 and F_2 in Fig. 4–17 passes through the point of intersection of F_3 and W, and is

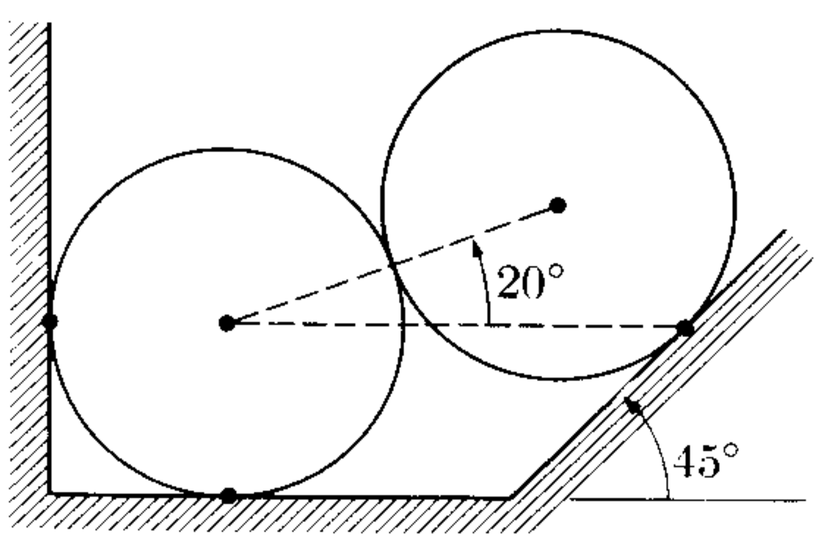

Figure 4–42

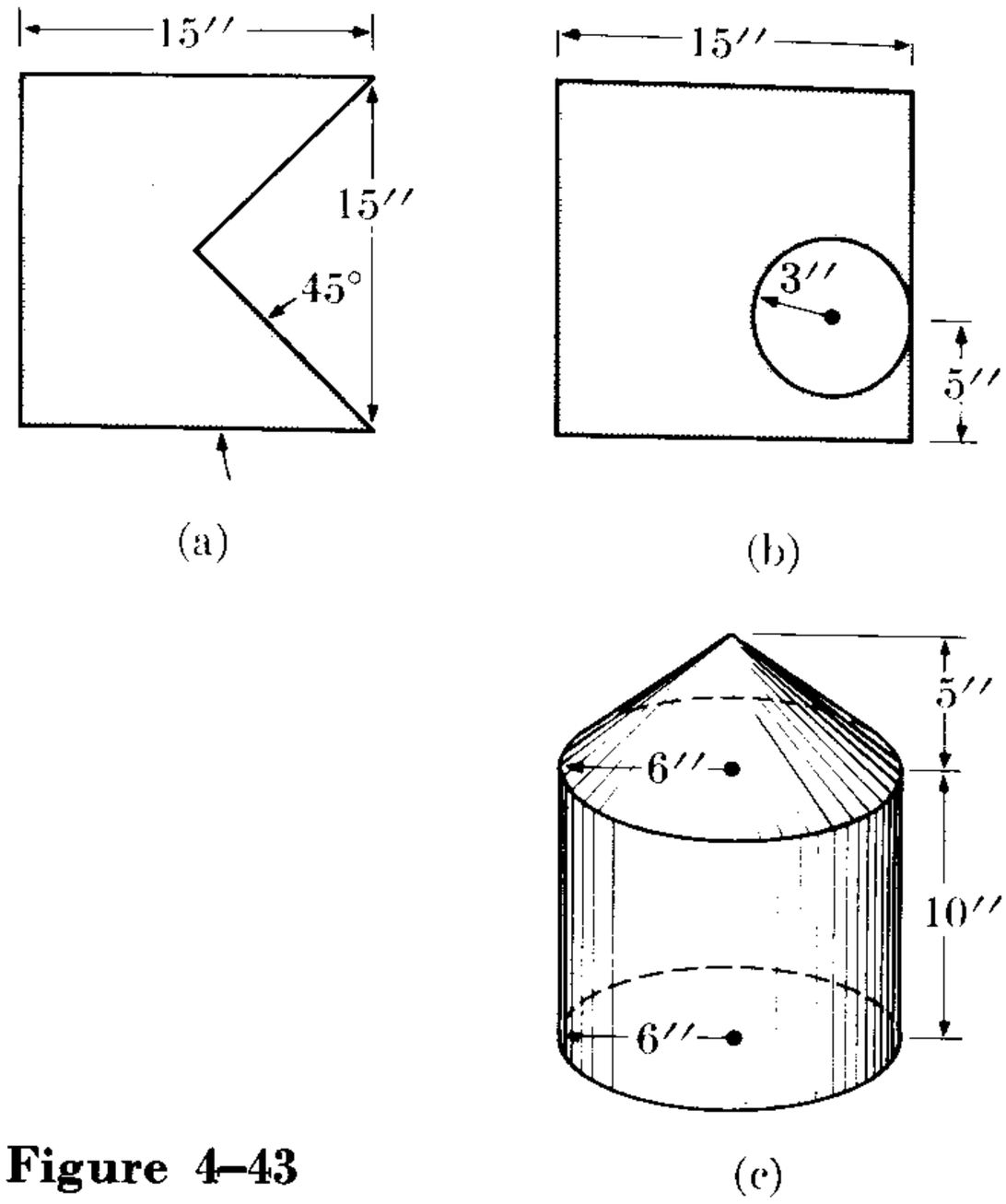

Figure 4–43

equal and opposite to their resultant. Was this result to be expected?

4.51 Find the center of mass of the three homogeneous bodies shown in Fig. 4–43.

4.52 Find the center of mass of (a) the earth–moon system and (b) the sun–earth system. Use the data listed in Table 13–1.

4.53 Find the coordinates of the center of mass of the homogeneous body represented in Fig. 4–44; $AB = 3$ cm, $BC = 2$ cm, $CD = 1.5$ cm, $DE = 6$ cm, $EF = 4$ cm, $FG = 2$ cm.

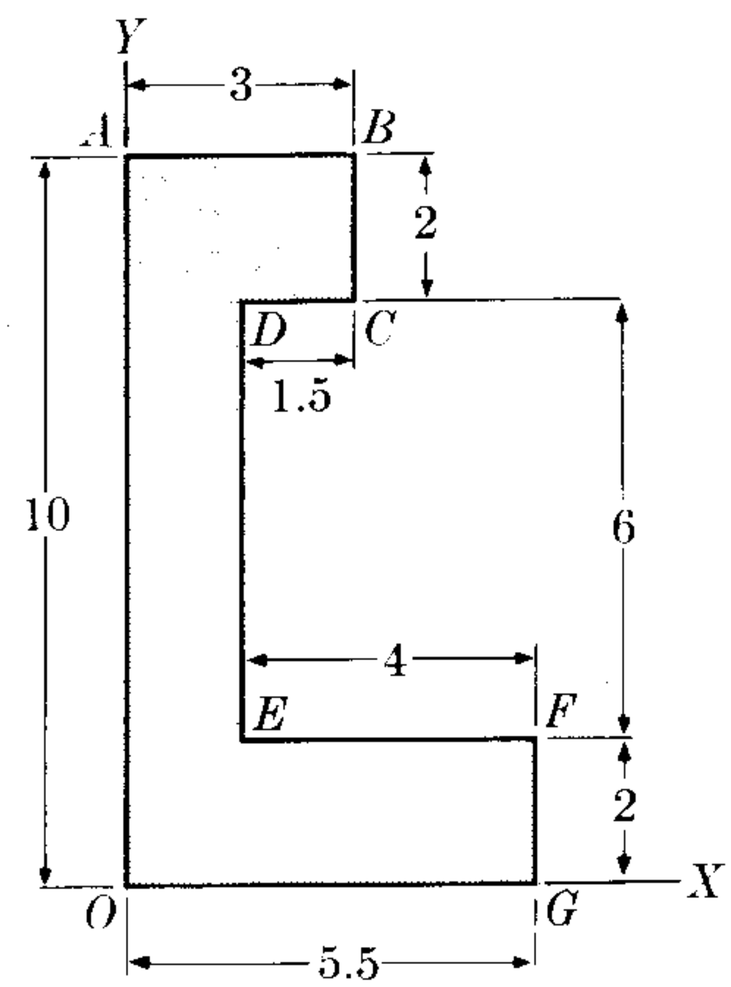

Figure 4–44

4.54 Determine the position of the CM of the following molecules: (a) CO, the distance between the C and O atoms being 1.13×10^{-10} m. (b) CO_2; this is a linear molecule with the C atom in the middle, equidistant from the two O atoms. (c) H_2O; this molecule is bent with the O atom at the vertex, the O–H distance is 0.91×10^{-10} m, and the angle between the two O-H bonds is 105°. (d) NH_3; this is a pyramidal molecule with the N atom at the vertex, the N–H distance is 1.01×10^{-10} m, and the angle between two N-H bonds is 108°.

4.55 Four equal masses are at the vertices of a regular tetrahedron of side a. Find the position of their CM.

PART 1
MECHANICS

5 Kinematics
6 Relative Motion
7 Dynamics of a Particle
8 Work and Energy
9 Dynamics of a System of Particles
10 Dynamics of a Rigid Body
11 High-Energy Dynamics
12 Oscillatory Motion

The most fundamental and obvious phenomenon we observe around us is *motion*. Blowing air, waves in the ocean, flying birds, running animals, falling leaves—all these are motion phenomena. Practically all imaginable processes can be traced back to the motion of certain objects. The earth and the planets move around the sun; electrons move inside the atom, giving rise to absorption and emission of light, or they move inside a metal, producing an electric current; gas molecules move, giving rise to pressure. Our everyday experience tells us that the motion of a body is influenced by the bodies that surround it; that is, by its *interactions* with them. What the physicist and the engineer do, essentially, is to arrange things in such a way that, under the mutual interactions of the particles, a certain kind of motion is produced. In a TV tube, the electron beam must move in a certain fashion to produce a pattern on the screen. In a thermal engine, the molecules of the burnt fuel must move in such a way that a piston or a turbine moves in a desired direction. A chemical reaction is the consequence of certain atomic motions resulting in a new arrangement, forming new classes of molecules. The role of the physicist is to discover the reasons for all these motions; and the role of the engineer is to arrange things so that useful motions are produced, motions which will make our life easier. There are several general rules or principles that apply to all kinds of motion, no matter what the nature of the interactions. This set of principles, and the theory that underlies it, is called *mechanics*.

To analyze and predict the nature of motions resulting from the different kinds of interactions, some important concepts have been invented, such as *momentum*, *force*, and *energy*. If the momentum, force, and/or energy are initially known, they can be expressed in a quantitative way and rules can be established by which the resulting motions can be predicted. Momentum, force, and energy are so important that we can rarely analyze a process without expressing it in terms of them.

Mechanics, which is the science of motion, is also the science of momentum, force, and energy. It is one of the fundamental areas of physics, and must be understood thoroughly before beginning a consideration of particular interactions. In Galileo's time this basic role of mechanics was already recognized, the idea being condensed in the statement, "*Ignorato motu, ignoratur natura.*" Mechanics will be studied in Chapters 5 through 12.

The science of mechanics as we understand it today is mainly the result of the genius of Sir Isaac Newton, who produced the great synthesis called Newton's principles. However, many more people have contributed to its advance. Some of the more illustrious names are Archimedes, Galileo, Kepler, Descartes, Huygens, Lagrange, Hamilton, Mach, and Einstein.

5
KINEMATICS

5.1 Introduction
5.2 Rectilinear Motion: Velocity
5.3 Rectilinear Motion: Acceleration
5.4 Vector Representation of Velocity and Acceleration in Rectilinear Motion
5.5 CurvilinearMotion: Velocity
5.6 Curvilinear Motion: Acceleration
5.7 Motion Under Constant Acceleration
5.8 Tangential and Normal Components of Acceleration
5.9 Circular Motion: Angular Velocity
5.10 Circular Motion: Angular Acceleration
5.11 General Curvilinear Motion in a Plane

5.1 Introduction

We say that an object is in motion relative to another when its position, measured relative to the second body, is changing with time. On the other hand, if this relative position does not change with time, the object is at relative rest. Both rest and motion are relative concepts; that is, they depend on the condition of the object relative to the body that serves as reference. A tree and a house are at rest relative to the earth, but in motion relative to the sun. When a train passes a station we say that the train is in motion relative to the station. But a passenger in the train might as well say that the station is in motion relative to the train, moving in the opposite direction.

To describe motion, therefore, the observer must define a *frame of reference* relative to which the motion is analyzed. In Fig. 5–1 we have indicated two observers O and O' and a particle P. These observers use frames of reference XYZ and $X'Y'Z'$, respectively. If O and O' are at rest relative to each other, they will observe the same motion of P. But if O and O' are in relative motion, their observations of the motion of P will be different.

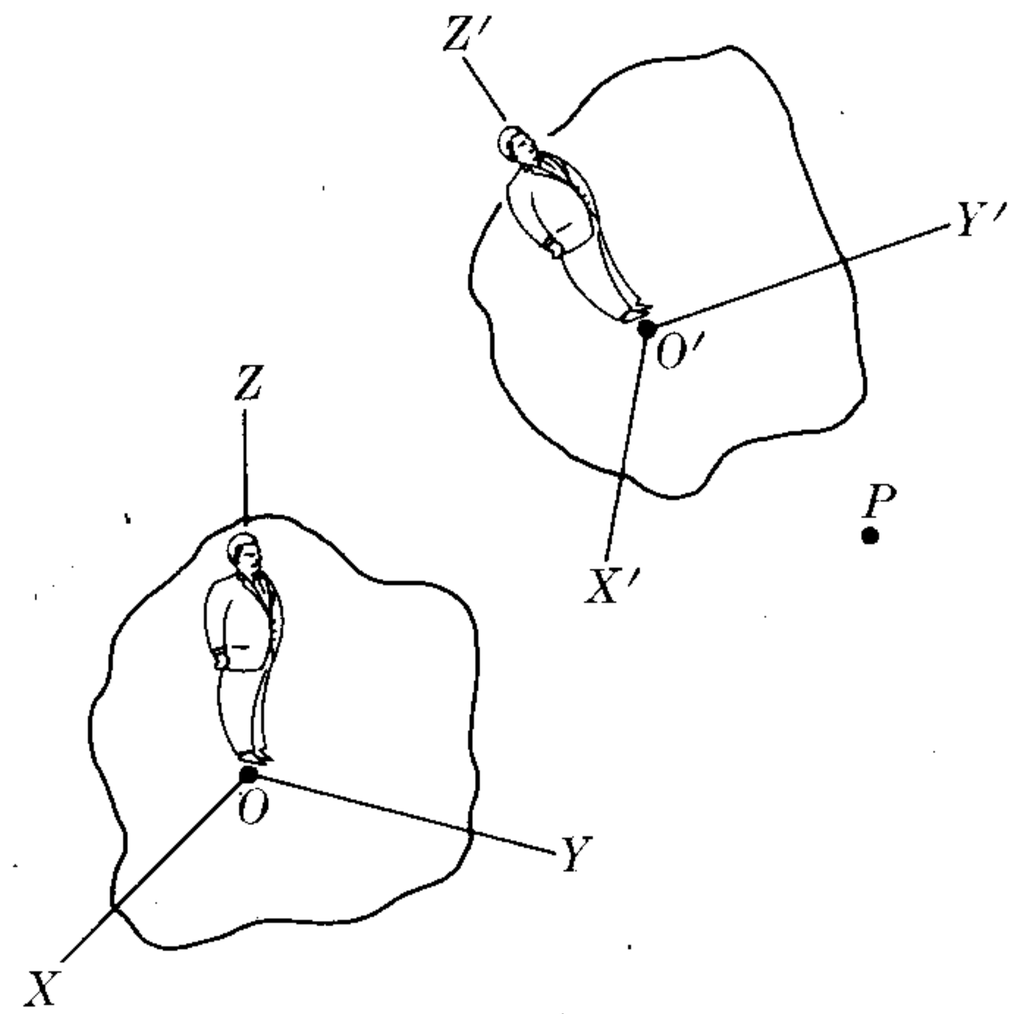

Fig. 5–1. Two different observers study the motion of P.

For example, let us consider two observers, one on the sun and the other on the earth (Fig. 5–2), both studying the motion of the moon. To the terrestrial observer using frame $X'Y'Z'$, the moon appears to describe an almost circular path around

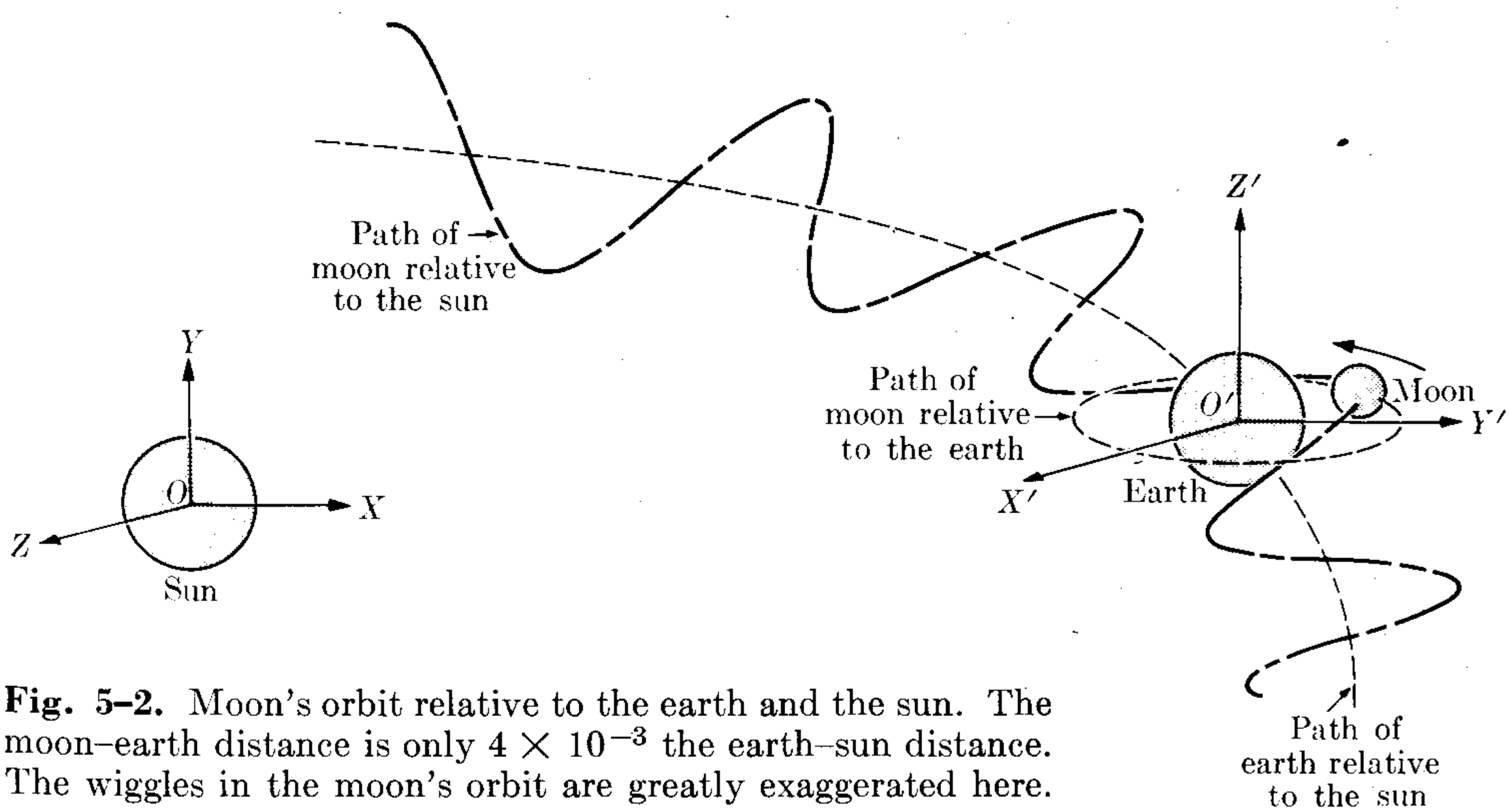

Fig. 5–2. Moon's orbit relative to the earth and the sun. The moon–earth distance is only 4×10^{-3} the earth–sun distance. The wiggles in the moon's orbit are greatly exaggerated here.

the earth. However, to the solar observer, using frame XYZ, the moon's orbit appears as a wavy line. However, if the observers know their relative motion, they can easily reconcile their respective observations. In Chapter 6 we shall discuss in more detail this important matter of comparing data gathered by observers who are in relative motion. For the time being we shall assume that we have a well-defined frame of reference.

5.2 Rectilinear Motion: Velocity

The motion of a body is rectilinear when its trajectory is a straight line. Let us take the OX-axis of Fig. 5–3, coincident with the trajectory. The position of the object is defined by its displacement x from an arbitrary point O, or origin. In principle, the displacement can be correlated with the time by means of a functional relation $x = f(t)$. Obviously, x may be positive or negative. Suppose that at time t the object is at position A, with $OA = x$. At a later time t', it is at B, with $OB = x'$. The *average velocity* between A and B is defined by

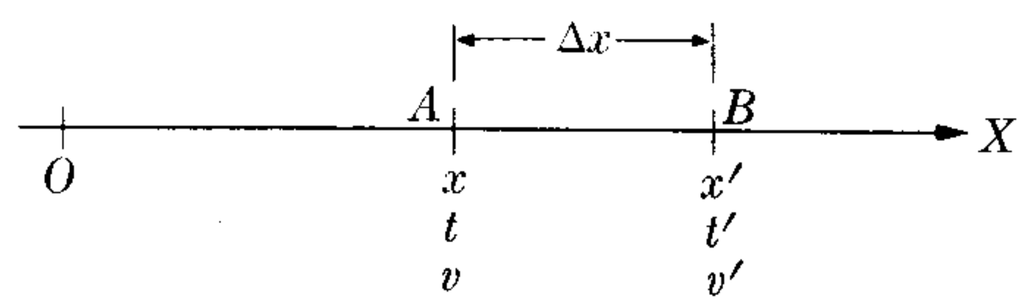

Figure 5–3

$$v_{\text{ave}} = \frac{x' - x}{t' - t} = \frac{\Delta x}{\Delta t}, \tag{5.1}$$

where $\Delta x = x' - x$ is the displacement of the particle and $\Delta t = t' - t$ is the elapsed time. Thus *the average velocity during a certain time interval is equal to the average displacement per unit time during the time interval.* To determine the *instantaneous velocity* at a point, such as A, we must make the time interval Δt as small as possible, so that essentially no changes in the state of motion occur during that small interval. In mathematical language this is equivalent to computing the limiting value of the fraction appearing in Eq. (5.1) when the denominator Δt approaches zero. This is written in the form

$$v = \lim_{\Delta t \to 0} v_{\text{ave}} = \lim_{\Delta t \to 0} \frac{\Delta x}{\Delta t}.$$

But this is the definition of the time derivative of x; that is,

$$v = \frac{dx}{dt}, \tag{5.2}$$

so that *we obtain the instantaneous velocity by computing the time derivative of the displacement.* Operationally, the instantaneous velocity is found by observing the moving body at two very close positions separated by the small distance dx and measuring the small time interval dt required to go from one position to the other. In the future the term "velocity" will always refer to instantaneous velocity.

If we know $v = f(t)$, we may solve Eq. (5.2) for x by the process of integration. That is, from Eq. (5.2) we have $dx = v\,dt$; then, integrating, we have

$$\int_{x_0}^{x} dx = \int_{t_0}^{t} v\,dt,$$

where x_0 is the value of x at time t_0. And, since $\int_{x_0}^{x} dx = x - x_0$,

$$x = x_0 + \int_{t_0}^{t} v\,dt. \tag{5.3}$$

To understand the physical meaning of Eq. (5.3), the student should realize that $v\,dt$ represents the displacement of the body in the short time interval dt. Thus, dividing the time interval $t - t_0$ into successive small intervals dt_1, dt_2, $dt_3, \ldots$, we find that the corresponding displacements are $v_1\,dt_1$, $v_2\,dt_2$, $v_3\,dt_3, \ldots$, and the total displacement between t_0 and t is the sum of all these. It should be noted that $v_1, v_2, v_3, \ldots$ are the values of the velocity in each time interval. Then, according to the meaning of a definite integral,

$$\text{Displacement} = v_1\,dt_1 + v_2\,dt_2 + v_3\,dt_3 + \cdots = \sum_i v_i\,dt_i = \int_{t_0}^{t} v\,dt.$$

This displacement is of course $x - x_0$, in agreement with Eq. (5.3). We must observe that the displacement Δx (or dx) may be positive or negative depending on whether the motion of the particle is to the right or to the left, resulting in a positive or negative sign for the velocity. Thus the sign of the velocity in rectilinear motion indicates the direction of motion. The direction is along $+OX$ if the velocity is positive and along $-OX$ if it is negative.

Sometimes the concept of *speed* is used, defined as distance/time. It is always positive, and is numerically equal to the magnitude of the velocity; i.e., speed $= |v|$. However, in general, the average speed does not have the same value as the average velocity. Also, it is important not to confuse the "displacement" $x - x_0$ in the time $t - t_0$ with the "distance" moved in the same time. The displacement is computed by Eq. (5.3), but the distance is obtained by $\int_{t_0}^{t} |v|\,dt$. For example, in going from city A to city B, which is 100 mi east of A, a driver may first go to city C, which is 50 mi west of A, and then turn back and go to B. The distance covered has been 200 mi, but the displacement is still 100 mi. If the motion takes place in 4 hr the average speed is 200 mi/4 hr $=$ 50 mi hr^{-1}, but the average velocity is 100 mi/4 hr $=$ 25 mi hr^{-1}.

In the MKSC system of units, velocity is expressed in meters per second, or m s^{-1}, this being the velocity of a body moving through one meter in one second with constant velocity. Of course, the velocity can also be expressed in any combination of space and time units, such as miles per hour, feet per minute, etc.

EXAMPLE 5.1. A particle moves along the X-axis in such a way that its position at any instant is given by $x = 5t^2 + 1$, where x is in meters and t is in seconds. Compute its average velocity in the time interval between (a) 2 s and 3 s, (b) 2 s and 2.1 s, (c) 2 s and 2.001 s, (d) 2 s and 2.00001 s. Also compute (e) the instantaneous velocity at 2 s.

Solution: We call $t_0 = 2$ s, which is common for the entire problem. Using $x = 5t^2 + 1$, we have $x_0 = 5(2)^2 + 1 = 21$ m. Therefore, for each question, $\Delta x = x - x_0 = x - 21$ and $\Delta t = t - t_0 = t - 2$.

(a) For $t = 3$ s, we have $\Delta t = 1$ s, $x = 5(3)^2 + 1 = 46$ m, and $\Delta x = 46$ m $-$ 21 m $= 25$ m. Thus

$$v_{\text{ave}} = \frac{\Delta x}{\Delta t} = \frac{25 \text{ m}}{1 \text{ s}} = 25 \text{ m s}^{-1}.$$

(b) For $t = 2.1$ s, we have $\Delta t = 0.1$ s, $x = 5(2.1)^2 + 1 = 23.05$ m, and $\Delta x = 2.05$ m. Thus

$$v_{\text{ave}} = \frac{\Delta x}{\Delta t} = \frac{2.05 \text{ m}}{0.1 \text{ s}} = 20.5 \text{ m s}^{-1}.$$

(c) For $t = 2.001$ s, we have $\Delta t = 0.001$ s, $x = 5(2.001)^2 + 1 = 21.020005$ m, and $\Delta x = 0.020005$ m. Thus

$$v_{\text{ave}} = \frac{\Delta x}{\Delta t} = \frac{0.020005 \text{ m}}{0.001 \text{ s}} = 20.005 \text{ m s}^{-1}.$$

(d) The student may verify for himself that for $t = 2.00001$ s, $v_{\text{ave}} = 20.00005$ m s^{-1}.

(e) We note then that as Δt becomes smaller, the velocity approaches the value 20 m s^{-1}. We may thus expect that this is the instantaneous velocity at $t = 2$ s. In fact,

$$v = \frac{dx}{dt} = \frac{d}{dt}(5t^2 + 1) = 10t.$$

When we set $t = 2$ s, then we obtain $v = 20$ m s^{-1}, which is the answer to (e).

5.3 Rectilinear Motion: Acceleration

In general, the velocity of a body is a function of time. If the velocity remains constant, the motion is said to be *uniform*. Again referring to Fig. 5–3, suppose that at time t the object is at A with velocity v, and at time t' it is at B with velocity v'. The *average acceleration* between A and B is defined by

$$a_{\text{ave}} = \frac{v' - v}{t' - t} = \frac{\Delta v}{\Delta t}, \tag{5.4}$$

where $\Delta v = v' - v$ is the change in velocity and, as before, $\Delta t = t' - t$ is the elapsed time. Thus *the average acceleration during a certain time interval is the change in velocity per unit time during the time interval.*

The *instantaneous acceleration* is the limiting value of the average acceleration when the time interval Δt becomes very small. That is,

$$a = \lim_{\Delta t \to 0} a_{\text{ave}} = \lim_{\Delta t \to 0} \frac{\Delta v}{\Delta t},$$

resulting in

$$a = \frac{dv}{dt}, \tag{5.5}$$

so that we obtain the instantaneous acceleration by computing the time derivative of the velocity. Operationally, the instantaneous acceleration is found by observing the small change of velocity dv that takes place in a very small time interval dt. In the future, whenever we say "acceleration," we shall mean the instantaneous acceleration.

In general, the acceleration varies during the motion. If the rectilinear motion has constant acceleration, the motion is said to be *uniformly accelerated.*

If the velocity increases in absolute value with time, the motion is said to be "accelerated"; but if the velocity decreases in absolute value with time, the motion is termed retarded or "decelerated."

If we know the acceleration, we may compute the velocity by integrating Eq. (5.5). From Eq. (5.5) we have $dv = a\,dt$, and, integrating, we obtain

$$\int_{v_0}^{v} dv = \int_{t_0}^{t} a\,dt,$$

where v_0 is the velocity at the time t_0. Then, since $\int_{v_0}^{v} dv = v - v_0$,

$$v = v_0 + \int_{t_0}^{t} a\,dt. \tag{5.6}$$

As in the case of displacement, the physical meaning of Eq. (5.6) is readily understood. We know that $a\,dt$ gives the change in velocity during a short time interval dt. Thus, again dividing the time interval $t - t_0$ into successive small time intervals dt_1, dt_2, dt_3, . . . , we find that the corresponding changes in velocity are $a_1\,dt_1$, $a_2\,dt_2$, $a_3\,dt_3$, . . . , where a_1, a_2, a_3, . . . are the values of the acceleration in each time interval, and the total change $v - v_0$ of the velocity between t_0 and t is the sum of these. That is,

$$\begin{aligned}\text{Change in velocity} = v - v_0 &= a_1\,dt_1 + a_2\,dt_2 + a_3\,dt_3 + \cdots \\ &= \sum_i a_i\,dt_i = \int_{t_0}^{t} a\,dt.\end{aligned}$$

The acceleration is also related to the position by combining Eqs. (5.2) and (5.5). That is,

$$a = \frac{dv}{dt} = \frac{d}{dt}\left(\frac{dx}{dt}\right)$$

or

$$a = \frac{d^2x}{dt^2}. \tag{5.7}$$

Another important relation between position and velocity can be obtained in the following way. From Eq. (5.5) we write $dv = a\,dt$. When we multiply the left-hand side of this equation by the left-hand side of Eq. (5.2) and repeat for the right-hand sides, we have

$$v\,dv = a\,dt\left(\frac{dx}{dt}\right) = a\,dx.$$

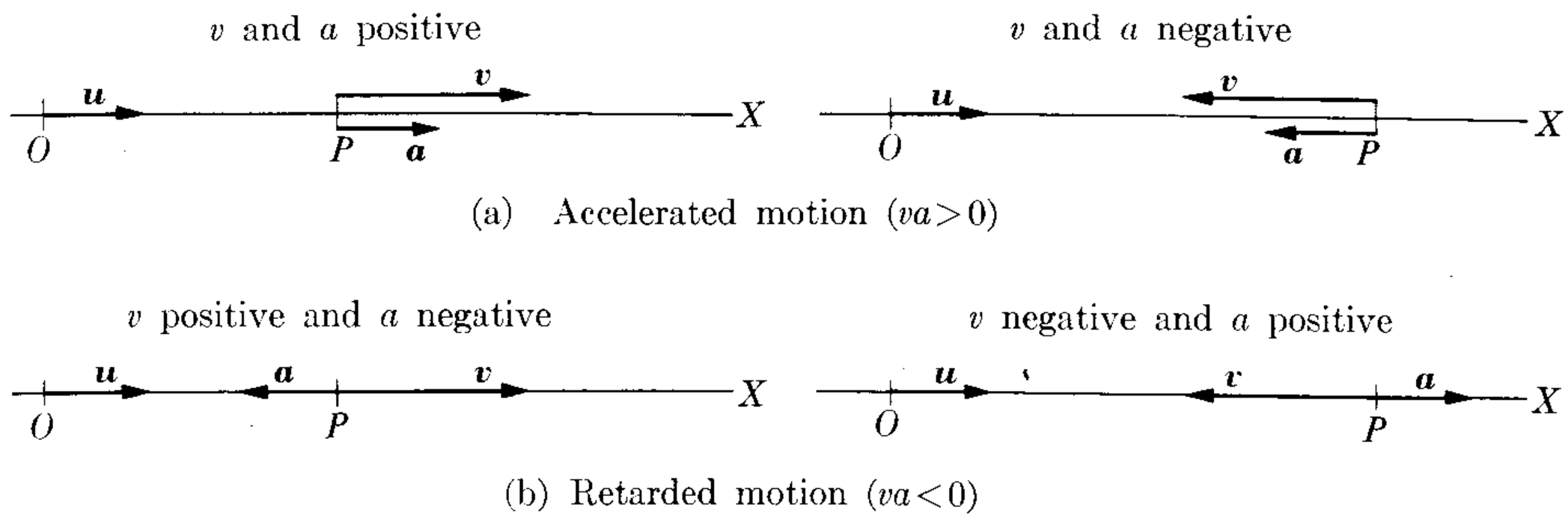

Fig. 5–4. Vector relation between velocity and acceleration in rectilinear motion.

Integrating, we obtain

$$\int_{v_0}^{v} v\,dv = \int_{x_0}^{x} a\,dx$$

or

$$\tfrac{1}{2}v^2 - \tfrac{1}{2}v_0^2 = \int_{x_0}^{x} a\,dx. \tag{5.8}$$

This equation is particularly useful in computing the velocity when the relation between x and a is known, so that the integral on the right-hand side may be computed.

In the MKSC system, the acceleration is expressed in meters per second per second, or (m/s)/s = m s^{-2}, this being the acceleration of a body whose velocity increases one meter per second in one second, with constant acceleration. But the acceleration may also be expressed in other units, such as (mi/hr)/s.

5.4 Vector Representation of Velocity and Acceleration in Rectilinear Motion

The velocity in rectilinear motion is represented by a vector whose length is given by Eq. (5.2) and whose direction coincides with that of the motion (Fig. 5–4). The acceleration is also represented by a vector of magnitude given by Eq. (5.5) and in the direction OX or the opposite, depending on whether it is positive or negative. If $\boldsymbol{u}$ is a unit vector in the positive direction of the X-axis, we may write in vector form

$$\boldsymbol{v} = \boldsymbol{u}v = \boldsymbol{u}\frac{dx}{dt} \qquad \text{and} \qquad \boldsymbol{a} = \boldsymbol{u}\frac{dv}{dt}.$$

Vectors $\boldsymbol{v}$ and $\boldsymbol{a}$ point along $\boldsymbol{u}$ or in the opposite direction, depending on the signs of dx/dt and dv/dt, respectively. The motion is accelerated or retarded, depending on whether $\boldsymbol{v}$ and $\boldsymbol{a}$ point in the same direction or in opposite directions (Fig. 5–4). A simple rule is: If v and a have the same sign, the motion is accelerated; if the signs are opposite, the motion is retarded.

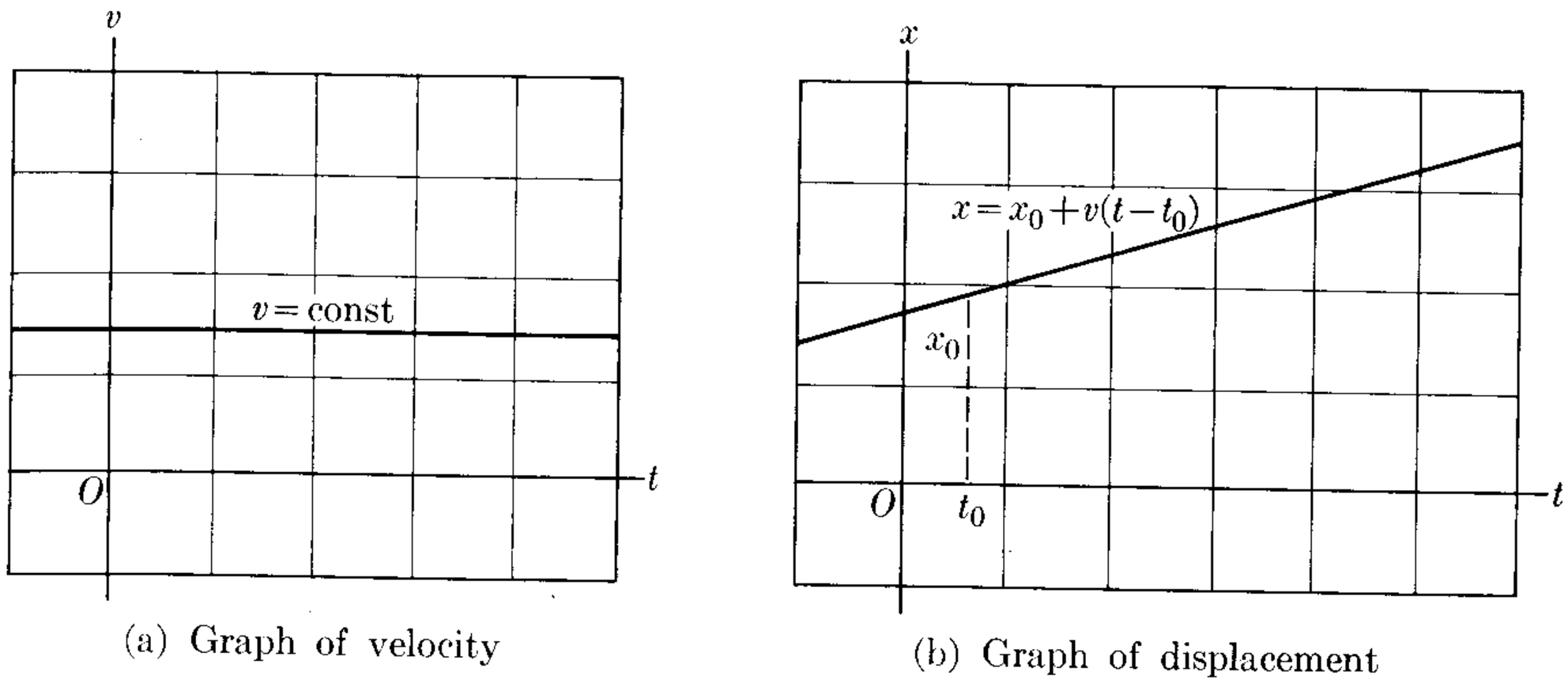

(a) Graph of velocity (b) Graph of displacement

Fig. 5–5. Graph of velocity and displacement in uniform motion.

EXAMPLE 5.2. Uniform rectilinear motion.

Solution: In this case v is constant. Therefore $a = dv/dt = 0$; i.e., there is no acceleration. Also from Eq. (5.3), when v is constant, we have

$$x = x_0 + \int_{t_0}^{t} v\,dt = x_0 + v\int_{t_0}^{t} dt = x_0 + v(t - t_0).$$

In Fig. 5–5(a), we plot v as a function of t. We also, in Fig. 5–5(b), plot x as a function of t.

EXAMPLE 5.3. Uniformly accelerated rectilinear motion.

Solution: In this case a is constant. Therefore, from Eq. (5.6), we have

$$v = v_0 + \int_{t_0}^{t} a\,dt = v_0 + a\int_{t_0}^{t} dt = v_0 + a(t - t_0), \tag{5.10}$$

and from Eq. (5.3), we have

$$x = x_0 + \int_{t_0}^{t} [v_0 + a(t - t_0)]\,dt = x_0 + v_0\int_{t_0}^{t} dt + a\int_{t_0}^{t} (t - t_0)\,dt,$$

or

$$x = x_0 + v_0(t - t_0) + \tfrac{1}{2}a(t - t_0)^2. \tag{5.11}$$

It is also useful to obtain the relation derived from Eq. (5.8),

$$\tfrac{1}{2}v^2 - \tfrac{1}{2}v_0^2 = a\int_{x_0}^{x} dx = a(x - x_0).$$

Then

$$v^2 = v_0^2 + 2a(x - x_0). \tag{5.12}$$

The most important case of uniformly accelerated motion is that of free vertical motion under the action of gravity. In this case, taking the upward direction as positive, we define $a = -g$, the minus sign being due to the fact that the gravitational acceleration is downward. The value of g varies from one place on the earth's surface to another, but

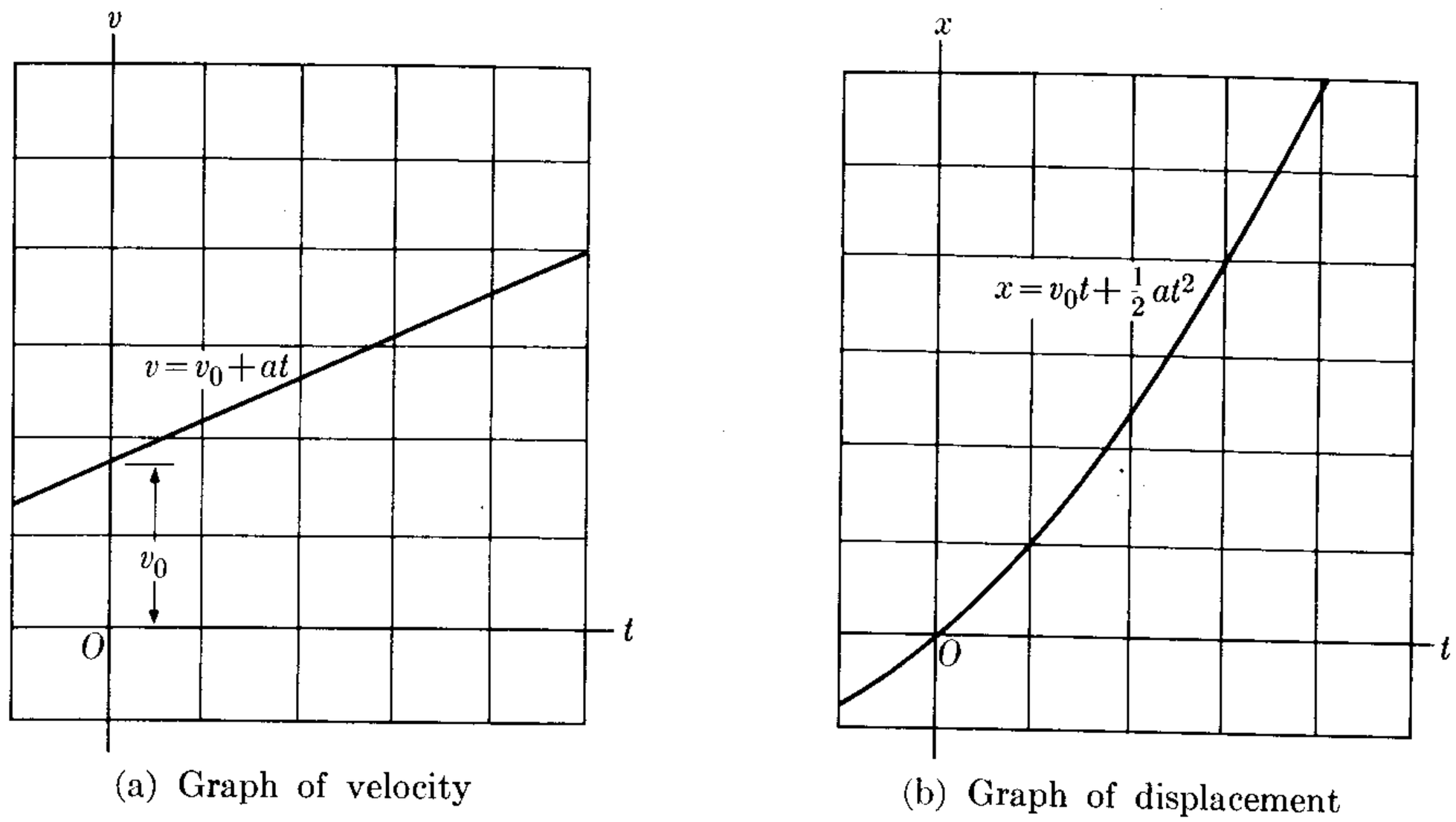

Fig. 5–6. Graph of velocity and displacement in uniformly accelerated motion.

is always very close to $g = 9.8\ \mathrm{m\,s^{-2}} = 32.2\ \mathrm{ft\,s^{-2}}$. This value is the same for all bodies, and may be considered independent of height, so long as we do not go far from the earth's surface, since the acceleration of gravity decreases when the distance above or below the earth's surface increases (Chapter 13).

We may plot both v and x against time. When, for simplicity, we set $t_0 = 0$ and $x_0 = 0$, Eq. (5.10) becomes $v = v_0 + at$ and Eq. (5.11) becomes $x = v_0t + \frac{1}{2}at^2$. Both equations have been plotted in Fig. 5–6. Graphs of this kind are very useful in analyzing all types of motion.

EXAMPLE 5.4. A body moves along the X-axis according to the law

$$x = 2t^3 + 5t^2 + 5,$$

where x is in feet and t is in seconds. Find (a) the velocity and the acceleration at any time, (b) the position, velocity, and acceleration at $t = 2$ s and 3 s, and (c) the average velocity and acceleration between $t = 2$ s and $t = 3$ s.

Solution: (a) Using Eqs. (5.2) and (5.5), we may write

$$v = \frac{dx}{dt} = \frac{d}{dt}(2t^3 + 5t^2 + 5) = 6t^2 + 10t\ \mathrm{ft\,s^{-1}},$$

$$a = \frac{dv}{dt} = \frac{d}{dt}(6t^2 + 10t) = 12t + 10\ \mathrm{ft\,s^{-2}}.$$

(b) At $t = 2$ s, using the respective expressions, we have

$$x = 41\ \mathrm{ft}, \qquad v = 44\ \mathrm{ft\,s^{-1}}, \qquad a = 34\ \mathrm{ft\,s^{-2}}.$$

Similarly, for $t = 3$ s, the student may verify that

$$x = 104\ \mathrm{ft}, \qquad v = 84\ \mathrm{ft\,s^{-1}}, \qquad a = 46\ \mathrm{ft\,s^{-2}}.$$

(c) To find the average velocity and acceleration between $t = 2$ s and $t = 3$ s, we have $\Delta t = 1$ s, and from (b) we have $\Delta x = 63$ ft, $\Delta v = 40$ ft s^{-1}. Thus

$$v_{\text{ave}} = \frac{\Delta x}{\Delta t} = \frac{63 \text{ ft}}{1 \text{ s}} = 63 \text{ ft s}^{-1}, \qquad a_{\text{ave}} = \frac{\Delta v}{\Delta t} = \frac{40 \text{ ft s}^{-1}}{1 \text{ s}} = 40 \text{ ft s}^{-2}.$$

EXAMPLE 5.5. The acceleration of a body moving along the X-axis is $a = (4x - 2)$ m s^{-2}, where x is in meters. Given that $v_0 = 10$ m s^{-1} at $x_0 = 0$ m, find the velocity at any other position.

Solution: Since the acceleration is expressed here as a function of position rather than as a function of time, we cannot use the definition $a = dv/dt$ for obtaining the velocity by integration. Instead we must use Eq. (5.8), with $v_0 = 10$ m s^{-1} and $x_0 = 0$. Thus

$$\tfrac{1}{2}v^2 - \tfrac{1}{2}(10)^2 = \int_0^x (4x - 2)\, dx$$

or

$$v^2 = 100 + 2(2x^2 - 2x)_0^x = 4x^2 - 4x + 100$$

and thus

$$v = \sqrt{4x^2 - 4x + 100}.$$

Should we write a $\pm$ sign in front of the radical? If so, what would its meaning be? We suggest that the student make a plot of the velocity v as a function of the position x.

We leave the student to find x as a function of time t by using the definition $v = dx/dt$, and from that result to obtain v and a as functions of time. [For obtaining $x(t)$, it may be necessary to look at a table of integrals.]

EXAMPLE 5.6. A bullet is fired straight upward with a velocity of 98 m s^{-1} from the top of a building 100 m high. Find (a) its maximum height above the ground, (b) the time required to reach it, (c) the velocity it has when it reaches the ground, and (d) the total time which elapses before the bullet reaches the ground.

Solution: Referring to Fig. 5–7 and using Eqs. (5.10) and (5.11), with $t_0 = 0$, $v_0 = 98$ m s^{-1}, $x_0 = x_A = 100$ m (the origin of coordinates C has been placed at the street) and $a = -g = -9.8$ m s^{-2}, we have at any time t,

$$v = 98 - 9.8t,$$
$$x = 100 + 98t - 4.9t^2.$$

At the point of maximum height $v = 0$. Thus $98 - 9.8t = 0$ or $t = 10$ s. Replacing this value in the expression for x, we have

$$x_B = 100 + 98(10) - 4.9(10)^2 = 590 \text{ m}.$$

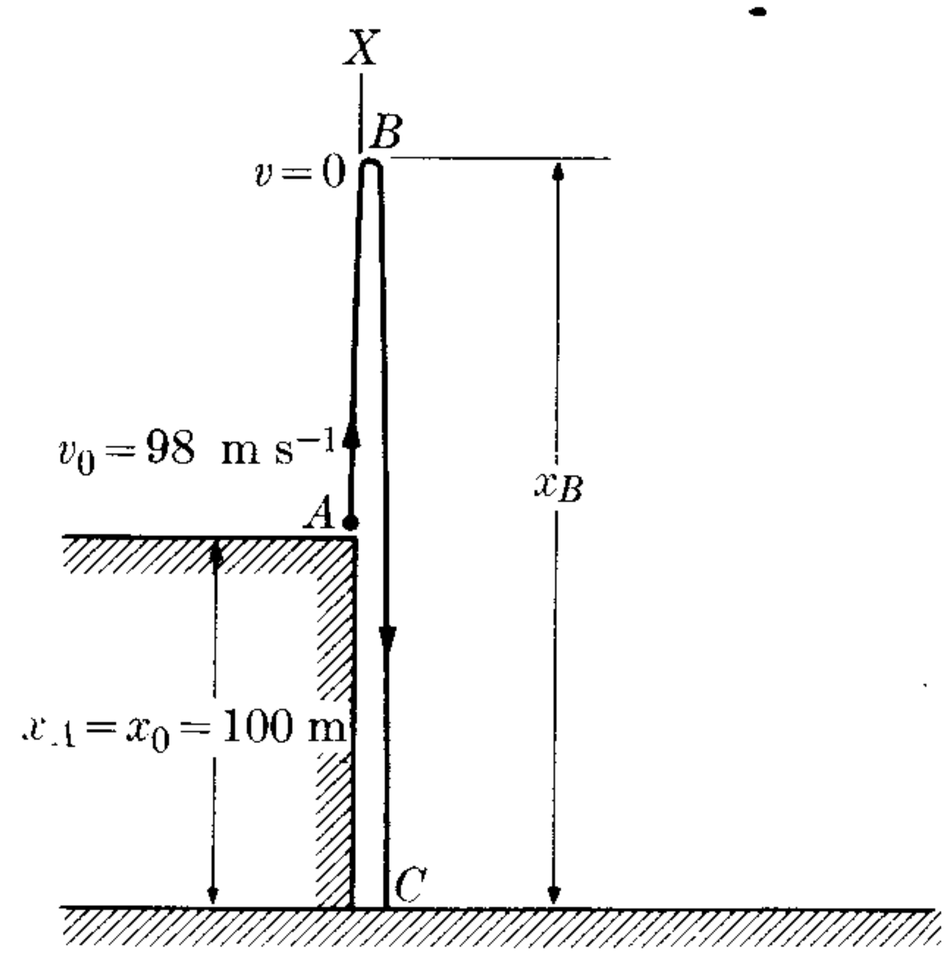

Figure 5–7

To obtain the time required to reach the ground

(that is, point C), we set $x_C = 0$, since C is our origin of coordinates. Then

$$0 = 100 + 98t - 4.9t^2.$$

This is a second-degree equation in t, whose roots are

$$t = -0.96 \text{ s} \quad \text{and} \quad t = 20.96 \text{ s}.$$

The negative answer corresponds to a time previous to the shooting ($t = 0$) and must be discarded, since it has no physical meaning in this problem (it may have in others). To obtain the velocity at C, we introduce the value $t = 20.96$ s in the expression for v_C, obtaining

$$v_C = 98 - 9.8(20.96) = -107.41 \text{ m s}^{-1}.$$

The negative sign means that the bullet is moving downward. It is suggested that the student verify the results for x_B and v_C by using Eq. (5.12), which for this problem reads

$$v^2 = 9604 - 19.6(x - 100).$$

Also the student should solve the problem by placing the origin of coordinates at A. Then

$$x_0 = x_A = 0 \text{ and } x_C = -100 \text{ m}.$$

EXAMPLE 5.7. A particle moves along the X-axis according to the law $x = t^3 - 3t^2 - 9t + 5$. During which intervals of time is the particle moving in the positive X-direction and during which is it moving in the negative X-direction? During which time intervals is the motion accelerated and during which is it retarded? Make a plot of x, v, and a as functions of time.

Solution: By applying Eq. (5.2), we can find the velocity of the particle at any time to be $v = dx/dt = 3t^2 - 6t - 9$. This may be rewritten in the form $v = 3(t + 1)(t - 3)$. Using Eq. (5.5), we can find the acceleration to be $a = 6t - 6 = 6(t - 1)$. The graphs of x, v, and a as functions of time are shown in Fig. 5–8. We note that, for $t < -1$, the velocity is positive and the motion is in the positive X-direction. At $t = -1, x = 10$, and the velocity is zero. For $-1 < t < 3$, the velocity is negative and the motion is reversed, the particle moving in the negative X-direction. At $t = 3$, when $x = -22$, the velocity is again zero. For $t > 3$, the velocity is once more positive and the motion is again

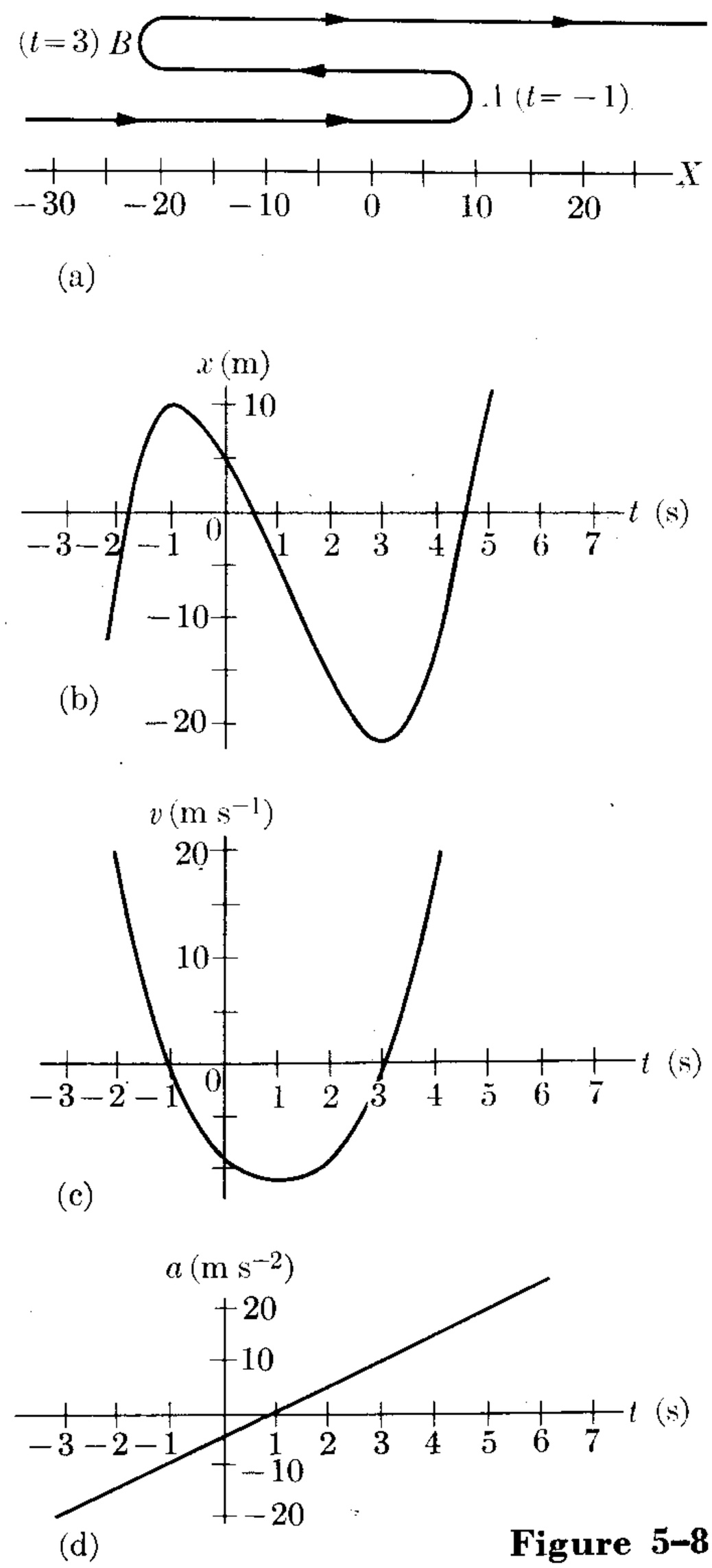

Figure 5–8

reversed, the particle now moving in the positive X-direction. The whereabouts of the particle are shown in Fig. 5–8(a); the turning points, where the velocity is zero, are marked A and B.

Looking at the graph of the velocity as well as the acceleration, we see that for $t < -1$ the motion is retarded (the magnitude of v decreases, or v and a have opposite signs). For $-1 < t < 1$, the motion is accelerated; for $1 < t < 3$, the motion is again retarded; finally, for $t > 3$, it is accelerated.

This example illustrates how useful the graphs of x, v, and a as functions of time are in disclosing the characteristics of the motion.

5.5 Curvilinear Motion: Velocity

Let us now consider a particle describing a curvilinear path P, as illustrated in Fig. 5–9. At time t the particle is at point A, given by position vector $\boldsymbol{r} = \overrightarrow{OA} = \boldsymbol{u}_x x + \boldsymbol{u}_y y + \boldsymbol{u}_z z$. At a later time t', the particle will be at B with $\boldsymbol{r}' = \overrightarrow{OB} = \boldsymbol{u}_x x' + \boldsymbol{u}_y y' + \boldsymbol{u}_z z'$. Although the particle has moved along the arc $AB = \Delta s$, the *displacement*, which is a vector, is $\overrightarrow{AB} = \Delta\boldsymbol{r}$. Note from the figure that $\boldsymbol{r}' = \boldsymbol{r} + \Delta\boldsymbol{r}$, and therefore

$$\begin{aligned}\overrightarrow{AB} = \Delta\boldsymbol{r} = \boldsymbol{r}' - \boldsymbol{r} &= \boldsymbol{u}_x(x' - x) + \boldsymbol{u}_y(y' - y) + \boldsymbol{u}_z(z' - z)\\ &= \boldsymbol{u}_x(\Delta x) + \boldsymbol{u}_y(\Delta y) + \boldsymbol{u}_z(\Delta z),\end{aligned} \tag{5.13}$$

where $\Delta x = x' - x$, $\Delta y = y' - y$, and $\Delta z = z' - z$. The average velocity, also a vector, is defined by

$$\boldsymbol{v}_{\text{ave}} = \frac{\Delta\boldsymbol{r}}{\Delta t}, \tag{5.14}$$

or, using Eq. (5.13),

$$\boldsymbol{v}_{\text{ave}} = \boldsymbol{u}_x \frac{\Delta x}{\Delta t} + \boldsymbol{u}_y \frac{\Delta y}{\Delta t} + \boldsymbol{u}_z \frac{\Delta z}{\Delta t}. \tag{5.15}$$

The average velocity is represented by a vector parallel to the displacement $\overrightarrow{AB} = \Delta\boldsymbol{r}$. To compute the instantaneous velocity we must, as in previous cases, make Δt very small. That is,

$$\boldsymbol{v} = \lim_{\Delta t \to 0} \boldsymbol{v}_{\text{ave}} = \lim_{\Delta t \to 0} \frac{\Delta\boldsymbol{r}}{\Delta t}. \tag{5.16}$$

Now when Δt approaches zero, point B approaches point A, as indicated by the points B', B'', . . . in Fig. 5–10. During this process the vector $\overrightarrow{AB} = \Delta\boldsymbol{r}$ changes continuously in magnitude *and* direction, and so does the average velocity. In the limit when B is very close to A, the vector $\overrightarrow{AB} = \Delta\boldsymbol{r}$ coincides in direction with the tangent AT. In curvilinear motion, therefore, the instantaneous velocity is a vector *tangent* to the path, and is given by

$$\boldsymbol{v} = \frac{d\boldsymbol{r}}{dt}. \tag{5.17}$$

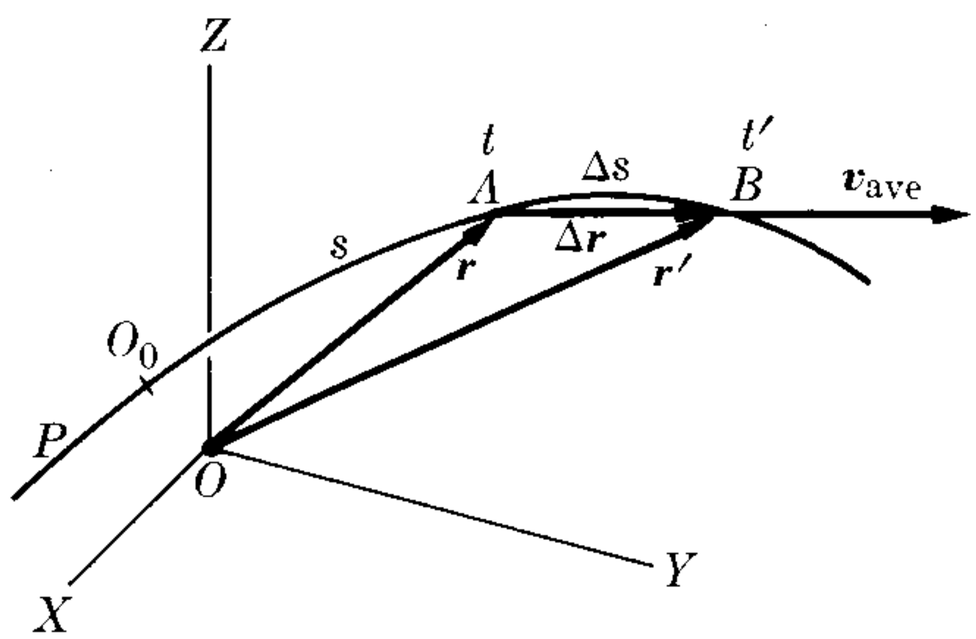

Fig. 5–9. Displacement and average velocity in curvilinear motion.

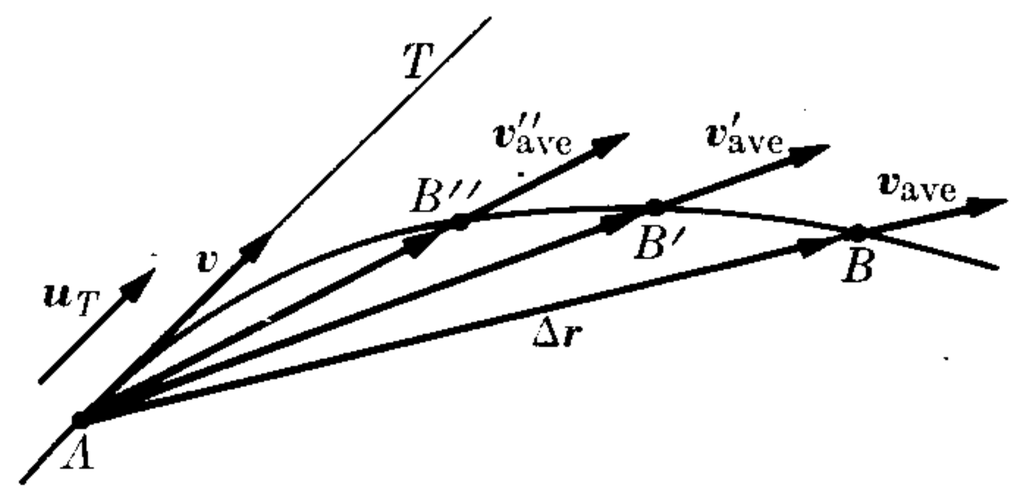

Fig. 5–10. The velocity is tangent to the path in curvilinear motion.

Or, if we take into account Eq. (5.15), the velocity is

$$\boldsymbol{v} = \boldsymbol{u}_x \frac{dx}{dt} + \boldsymbol{u}_y \frac{dy}{dt} + \boldsymbol{u}_z \frac{dz}{dt}, \tag{5.18}$$

indicating that the components of the velocity along the X-, Y-, and Z-axes are

$$v_x = \frac{dx}{dt}, \qquad v_y = \frac{dy}{dt}, \qquad v_z = \frac{dz}{dt}, \tag{5.19}$$

and the magnitude of the velocity, often called the speed, is

$$v = \sqrt{v_x^2 + v_y^2 + v_z^2}. \tag{5.20}$$

In passing from Eq. (5.16) to Eq. (5.17), we may proceed in a slightly different way. Let O_0 (Fig. 5–9) be an arbitrary reference point on the path. Then $s = O_0A$ gives the position of the particle as measured by the displacement *along* the curve. As in the rectilinear case, s may be positive or negative, depending on which side of O_0 the particle is. When the particle moves from A to B, the displacement Δs along the curve is given by the length of the arc AB. Multiplying and dividing Eq. (5.16) by Δs = arc AB, we obtain

$$\boldsymbol{v} = \lim_{\Delta t \to 0} \frac{\Delta \boldsymbol{r}}{\Delta s} \frac{\Delta s}{\Delta t} = \left(\lim_{\Delta s \to 0} \frac{\Delta \boldsymbol{r}}{\Delta s}\right)\left(\lim_{\Delta t \to 0} \frac{\Delta s}{\Delta t}\right),$$

in which we indicate in the first factor that $\Delta s \to 0$ when $\Delta t \to 0$ (see Fig. 5–10). Now from Fig. 5–9 we can see that the magnitude of $\Delta \boldsymbol{r}$ is about equal to Δs, and the closer B is to A, the closer the magnitude of $\Delta \boldsymbol{r}$ is to Δs. Therefore $\lim_{\Delta s \to 0} \Delta \boldsymbol{r}/\Delta s$ represents a vector having unit magnitude and a direction tangent to the path. That is,

$$\frac{d\boldsymbol{r}}{ds} = \lim_{\Delta s \to 0} \frac{\Delta \boldsymbol{r}}{\Delta s} = \boldsymbol{u}_T. \tag{5.21}$$

On the other hand,

$$\lim_{\Delta t \to 0} \frac{\Delta s}{\Delta t} = \frac{ds}{dt}. \tag{5.22}$$

Therefore we can write $\boldsymbol{v}$ in the form

$$\boldsymbol{v} = \boldsymbol{u}_T \frac{ds}{dt} = \boldsymbol{u}_T v, \tag{5.23}$$

where $ds/dt = v$ gives the value of the velocity, and the unit vector $\boldsymbol{u}_T$ gives the direction of the velocity. The fact that $v = ds/dt$ is the value of the velocity is in agreement with our previous definition of velocity in Eq. (5.2), since now ds is the displacement along the curvilinear path in the time dt. So ds plays the same role in curvilinear motion as dx does in rectilinear motion. The only difference between Eqs. (5.23) and (5.2) is the inclusion of the direction element, as given by the tangent unit vector $\boldsymbol{u}_T$, which was previously introduced in Section 5.4.

5.6 Curvilinear Motion: Acceleration

In curvilinear motion the velocity, in general, changes both in magnitude and in direction. The magnitude of the velocity changes because the particle may speed up or slow down. The direction of the velocity changes because the velocity is tangent to the path and the path bends continuously. Figure 5–11 indicates the velocity at times t and t', when the particle is at A and B, respectively. The vector change in velocity in going from A to B is indicated by $\Delta\boldsymbol{v}$ in the vector triangle; that is, since, from the triangle, $\boldsymbol{v} + \Delta\boldsymbol{v} = \boldsymbol{v}'$, then $\Delta\boldsymbol{v} = \boldsymbol{v}' - \boldsymbol{v}$. Hence the average acceleration, in the time interval Δt, which is a vector, is defined by

$$\boldsymbol{a}_{\text{ave}} = \frac{\Delta\boldsymbol{v}}{\Delta t}, \tag{5.24}$$

and is parallel to $\Delta\boldsymbol{v}$. Since $\boldsymbol{v} = \boldsymbol{u}_x v_x + \boldsymbol{u}_y v_y + \boldsymbol{u}_z v_z$, we have that $\Delta\boldsymbol{v} = \boldsymbol{u}_x\,\Delta v_x + \boldsymbol{u}_y\,\Delta v_y + \boldsymbol{u}_z\,\Delta v_z$ and

$$\boldsymbol{a}_{\text{ave}} = \boldsymbol{u}_x \frac{\Delta v_x}{\Delta t} + \boldsymbol{u}_y \frac{\Delta v_y}{\Delta t} + \boldsymbol{u}_z \frac{\Delta v_z}{\Delta t}. \tag{5.25}$$

The instantaneous acceleration, which in the future will be referred to simply as acceleration, is defined by

$$\boldsymbol{a} = \lim_{\Delta t \to 0} \boldsymbol{a}_{\text{ave}} = \lim_{\Delta t \to 0} \frac{\Delta\boldsymbol{v}}{\Delta t}$$

or

$$\boldsymbol{a} = \frac{d\boldsymbol{v}}{dt}. \tag{5.26}$$

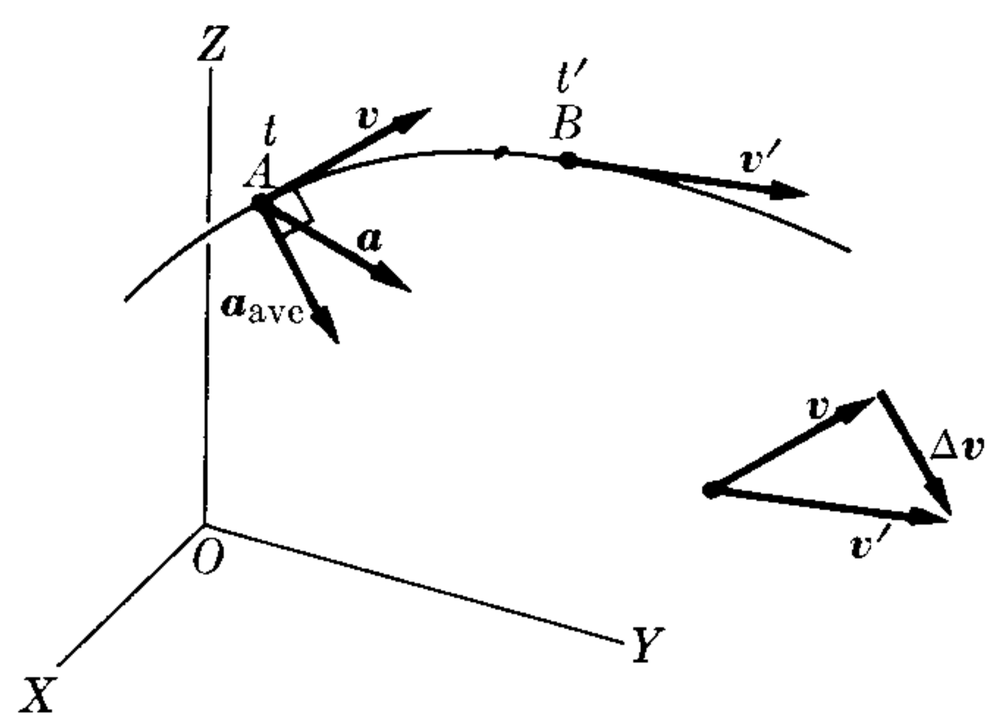

Fig. 5–11. Acceleration in curvilinear motion.

Acceleration is a vector that has the same direction as the instantaneous change in velocity. Since velocity changes in the direction in which the curve bends, acceleration is always pointing toward the concavity of the curve, and in general

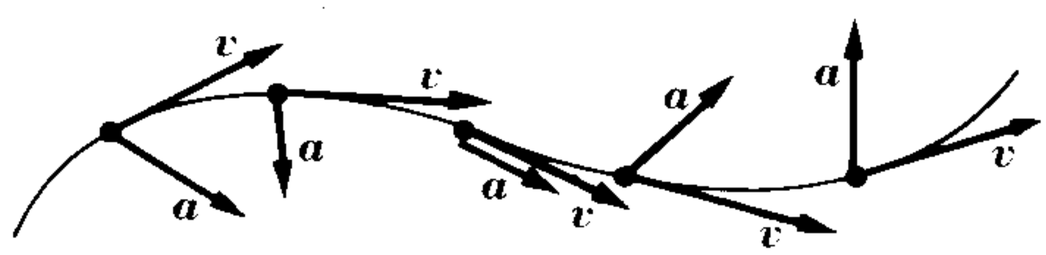

Fig. 5–12. Vector relation between velocity and acceleration in curvilinear motion.

is neither tangent nor perpendicular to the path, as indicated in Fig. 5–12. Remembering Eq. (5.17), we can also write Eq. (5.26) in the form

$$\boldsymbol{a} = \frac{d^2\boldsymbol{r}}{dt^2}. \tag{5.27}$$

From Eq. (5.25) we observe that

$$\boldsymbol{a} = \boldsymbol{u}_x \frac{dv_x}{dt} + \boldsymbol{u}_y \frac{dv_y}{dt} + \boldsymbol{u}_z \frac{dv_z}{dt}, \tag{5.28}$$

so that the components of the acceleration along the X-, Y-, and Z-axes are

$$a_x = \frac{dv_x}{dt}, \qquad a_y = \frac{dv_y}{dt}, \qquad a_z = \frac{dv_z}{dt}, \tag{5.29}$$

or, by virtue of Eq. (5.19) or Eq. (5.27),

$$a_x = \frac{d^2x}{dt^2}, \qquad a_y = \frac{d^2y}{dt^2}, \qquad a_z = \frac{d^2z}{dt^2}. \tag{5.30}$$

The magnitude of the acceleration is

$$a = \sqrt{a_x^2 + a_y^2 + a_z^2}. \tag{5.31}$$

In curvilinear motion we usually know the equation of the path; that is, we know the coordinates of the moving particle as functions of time. These coordinates are given by the equations

$$x = x(t), \qquad y = y(t), \qquad z = z(t).$$

By applying Eqs. (5.19) and (5.29), we can compute the velocity and the acceleration. In other cases the problem is the opposite: we know the components of the acceleration as a function of time; that is,

$$a_x = a_x(t), \qquad a_y = a_y(t), \qquad a_z = a_z(t).$$

Then, by using Eq. (5.29) and integrating, we obtain the components of the velocity, and by integrating Eq. (5.19) we obtain the coordinates as functions of time.

5.7 Motion Under Constant Acceleration

The case in which acceleration is constant, both in magnitude and direction, is of special importance. If $\boldsymbol{a}$ = const we have, by integrating Eq. (5.26),

$$\int_{v_0}^{v} d\boldsymbol{v} = \int_{t_0}^{t} \boldsymbol{a}\, dt = \boldsymbol{a}\int_{t_0}^{t} dt = \boldsymbol{a}(t - t_0), \tag{5.32}$$

where $\boldsymbol{v}_0$ is the velocity at time t_0. Then, since $\int_{v_0}^{v} d\boldsymbol{v} = \boldsymbol{v} - \boldsymbol{v}_0$,

$$\boldsymbol{v} = \boldsymbol{v}_0 + \boldsymbol{a}(t - t_0) \tag{5.33}$$

gives the velocity at any other time. Substituting this result in Eq. (5.17), and integrating, we obtain

$$\int_{r_0}^{r} d\boldsymbol{r} = \int_{t_0}^{t} [\boldsymbol{v}_0 + \boldsymbol{a}(t - t_0)]\, dt = \boldsymbol{v}_0\int_{t_0}^{t} dt + \boldsymbol{a}\int_{t_0}^{t} (t - t_0)\, dt,$$

where $\boldsymbol{r}_0$ gives the position at time t_0. Then

$$\boldsymbol{r} = \boldsymbol{r}_0 + \boldsymbol{v}_0(t - t_0) + \tfrac{1}{2}\boldsymbol{a}(t - t_0)^2, \tag{5.34}$$

which gives the position of the particle at any time. These results must be compared with Eqs. (5.10) and (5.11) obtained for rectilinear motion under constant acceleration. In rectilinear motion, both the velocity and the acceleration have the same (or opposite) direction. However, in the more general case we are discussing now, $\boldsymbol{v}_0$ and $\boldsymbol{a}$ may have different directions. Therefore $\boldsymbol{v}$ as given by Eq. (5.33) is not parallel to $\boldsymbol{a}$, but is always in the plane defined by $\boldsymbol{v}_0$ and $\boldsymbol{a}$. Also, from Eq. (5.34), we see that the endpoint of the vector $\boldsymbol{r}$ is always in the plane parallel to $\boldsymbol{v}_0$ and $\boldsymbol{a}$, and which passes through the point defined by $\boldsymbol{r}_0$. We conclude then that motion under constant acceleration is always in a plane. Also Eq. (5.34) indicates that the path of the motion is a parabola (see Problem 3.33).

One of the most interesting uses of these equations is their application to the motion of a projectile. In this case $\boldsymbol{a} = \boldsymbol{g}$ = acceleration of gravity. We shall choose the XY-plane coincident with the plane defined by $\boldsymbol{v}_0$ and $\boldsymbol{a} = \boldsymbol{g}$, the Y-axis directed upward so that $\boldsymbol{g} = -\boldsymbol{u}_y g$, and the origin O coincident with $\boldsymbol{r}_0$ (Fig. 5–13). Then

$$\boldsymbol{v}_0 = \boldsymbol{u}_x v_{0x} + \boldsymbol{u}_y v_{0y},$$

where

$$v_{0x} = v_0 \cos\alpha, \qquad v_{0y} = v_0 \sin\alpha. \tag{5.35}$$

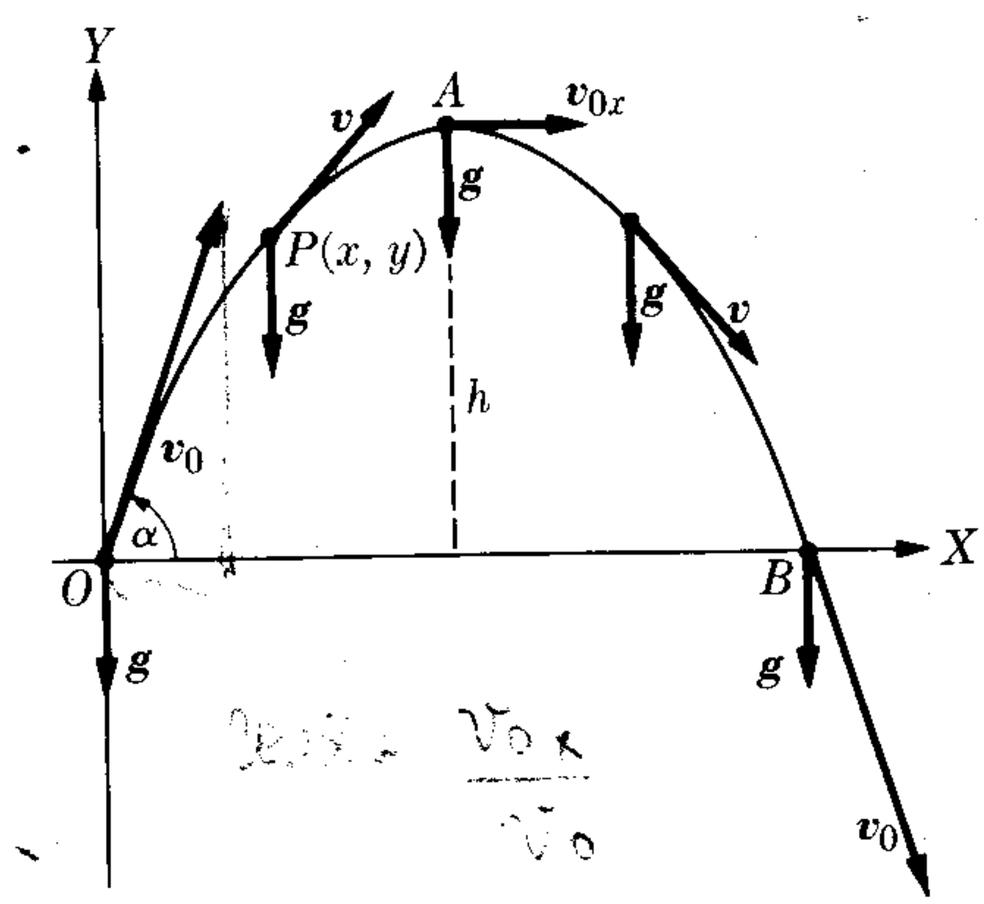

Fig. 5–13. When the acceleration is constant the path is a parabola.

Equation (5.33) can be separated into its components (setting $t_0 = 0$) by writing

$$\left.\begin{aligned} \boldsymbol{v} &= \boldsymbol{u}_x v_x + \boldsymbol{u}_y v_y = (\boldsymbol{u}_x v_{0x} + \boldsymbol{u}_y v_{0y}) - \boldsymbol{u}_y g t \\ \text{or} \quad & \\ v_x &= v_{0x}, \qquad v_y = v_{0y} - gt, \end{aligned}\right\} \tag{5.36}$$

indicating that the X-component of $\boldsymbol{v}$ remains constant, as it should, since there is no acceleration in that direction. Similarly, Eq. (5.34) with $\boldsymbol{r}_0 = 0$ and $t_0 = 0$, when separated into its components, becomes

$$\boldsymbol{r} = \boldsymbol{u}_x x + \boldsymbol{u}_y y = (\boldsymbol{u}_x v_{0x} + \boldsymbol{u}_y v_{0y})t - \boldsymbol{u}_y \tfrac{1}{2} g t^2$$

or

$$x = v_{0x} t, \qquad y = v_{0y} t - \tfrac{1}{2} g t^2, \tag{5.37}$$

which gives the coordinates of the particle as functions of time. The time required for the projectile to reach the highest point A is obtained by setting $v_y = 0$ in Eq. (5.36) since, at that point, the velocity of the projectile is horizontal. Then

$$t = \frac{v_{0y}}{g} \qquad \text{or} \qquad t = \frac{v_0 \sin \alpha}{g}. \tag{5.38}$$

The maximum height h is obtained by substituting this value of t in the second equation of (5.37), resulting in

$$h = \frac{v_0^2 \sin^2 \alpha}{2g}. \tag{5.39}$$

The time required for the projectile to return to ground level at B, called the *time of flight*, can be obtained by making $y = 0$ in Eq. (5.37). The time is obviously twice the value given by Eq. (5.38), or $2v_0 \sin \alpha / g$. The *range* $R = OB$ is the total horizontal distance covered, and is obtained by substituting the value for the time of flight in the first equation of (5.37), resulting in

$$R = v_{0x} \frac{2v_0 \sin \alpha}{g} = \frac{2v_0^2 \sin \alpha \cos \alpha}{g}$$

or

$$R = \frac{v_0^2 \sin 2\alpha}{g}. \tag{5.40}$$

Note that the range is a maximum for $\alpha = 45°$. The equation of the path is obtained by eliminating the time t between the two equations in (5.37), giving

$$y = -\frac{g}{2v_0^2 \cos^2 \alpha} x^2 + x \tan \alpha, \tag{5.41}$$

which is the equation of a parabola, since both $\tan \alpha$ and the quantity multiplying x^2 are constants.

The results we have obtained are valid when: (1) The range is small enough so that the curvature of the earth may be neglected. (2) The altitude is small

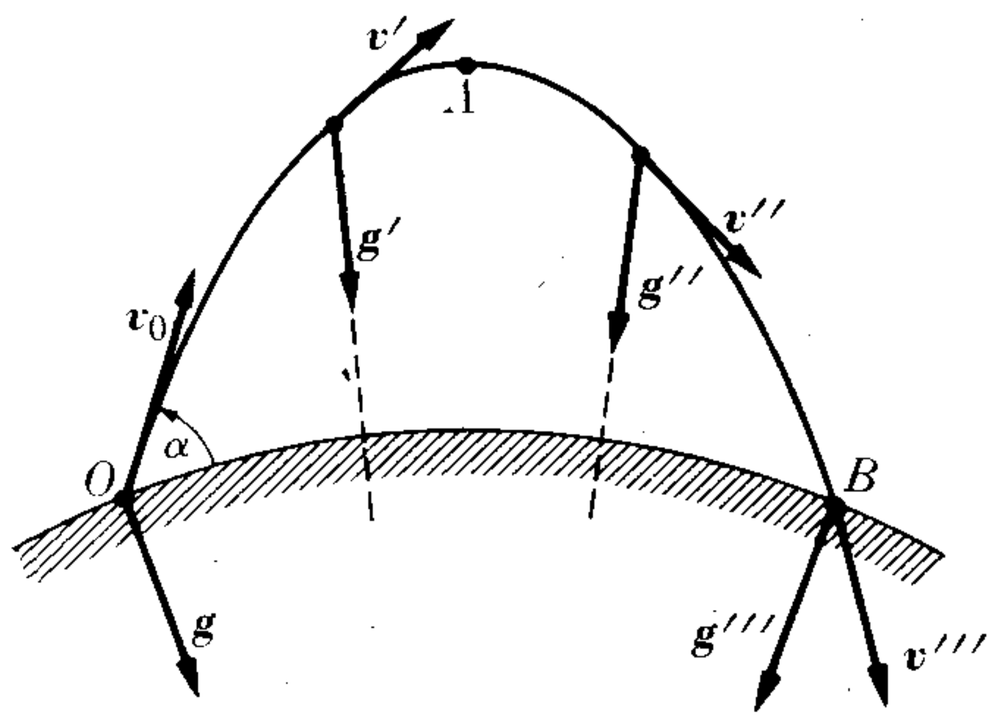

Fig. 5–14. The path of the long-range projectile is not a parabola, but an arc of an ellipse.

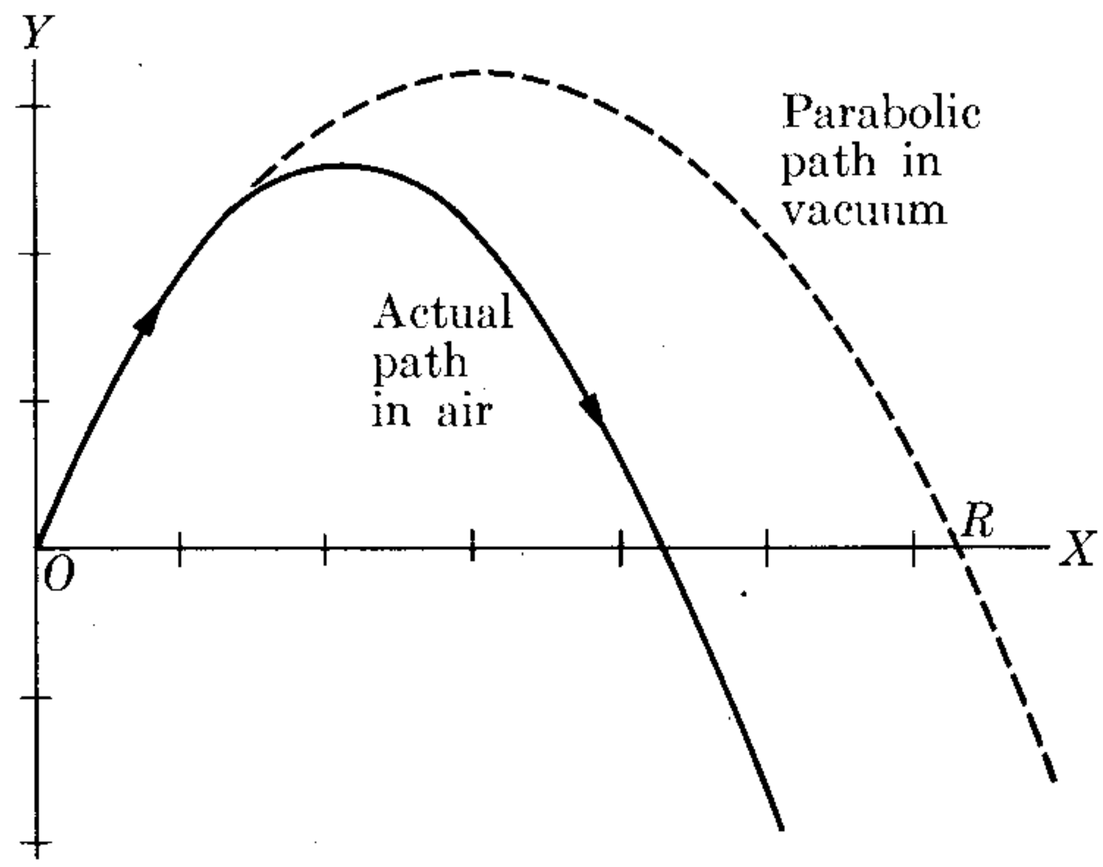

Fig. 5–15. Effect of air resistance on the motion of a projectile.

enough so that the variation of gravity with height may be neglected. (3) The initial velocity is small enough so that air resistance may be neglected. For a long-range projectile, such as an ICBM, the situation is as depicted in Fig. 5–14, where all g-vectors point toward the center of the earth and vary with height. The path is, in this case, an arc of an ellipse, as will be discussed in Chapter 13. If we take into account the resistance of the air, the path dêparts from a parabola, as shown in Fig. 5–15, and the range is diminished.

EXAMPLE 5.8. A gun fires a bullet with a velocity of 200 m s^{-1} at an angle of 40° with the ground. Find the velocity and position of the bullet after 20 s. Also find the range and the time required for the bullet to return to ground.

Solution: From Fig. 5–16, noting that v_0 = 200 m s^{-1} and α = 40°, we have that $v_{0x} = v_0 \cos\alpha$ = 153.2 m s^{-1} and $v_{0y} = v_0 \sin\alpha$ = 128.6 m s^{-1}. Thus the components of the velocity at any time are given by v_x = 153.2 m s^{-1} and v_y = 128.6 — 9.8t m s^{-1}, and the coordinates of the bullet are

$$x = 153.2t \text{ m}, \qquad y = 128.6t - 4.9t^2 \text{ m}.$$

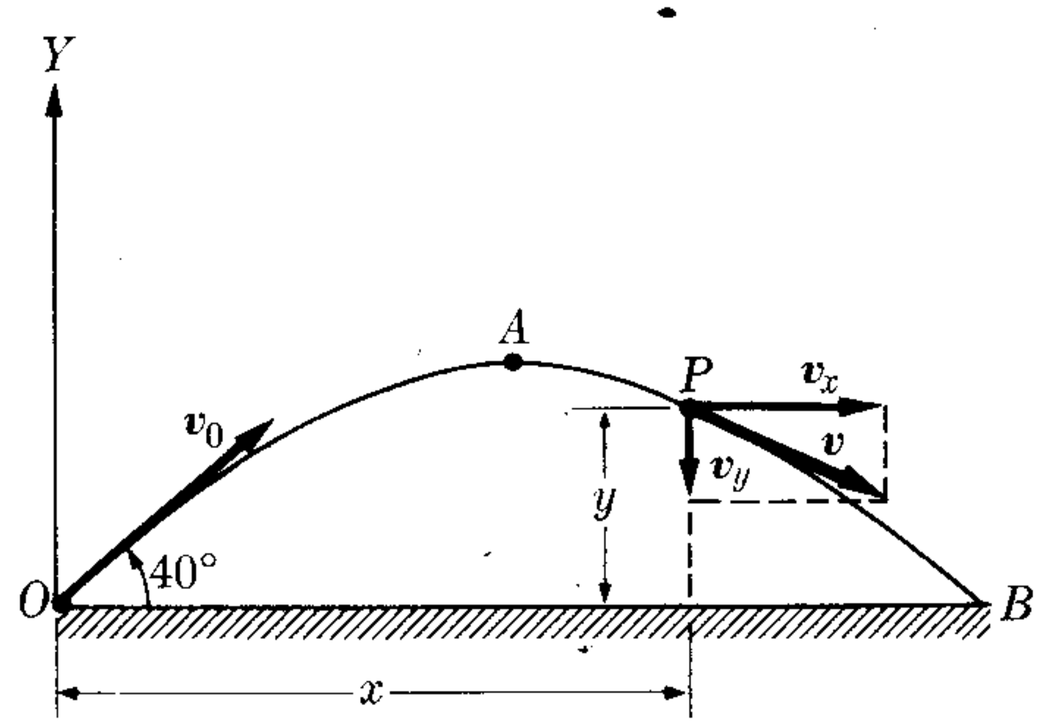

Fig. 5–16. Velocity in projectile motion.

For t = 20 s, we have simply v_x = 153.2 m s^{-1} and v_y = —67.4 m s^{-1}. The fact that v_y is negative means that the bullet is descending. The velocity is $v = \sqrt{v_x^2 + v_y^2}$ = 167.4 m s^{-1}. Similarly the position of P is given by x = 3064 m and y = 612 m. The student must verify that the height of A is 843.7 m, that the range $R = OB$ is 4021 m, and that the time required to go from O to B is 26.24 s.

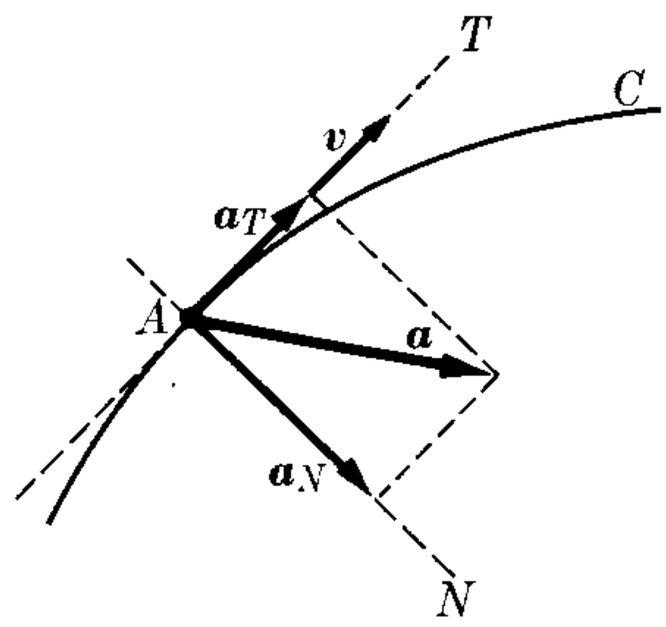

Fig. 5–17. Tangential and normal acceleration in curvilinear motion.

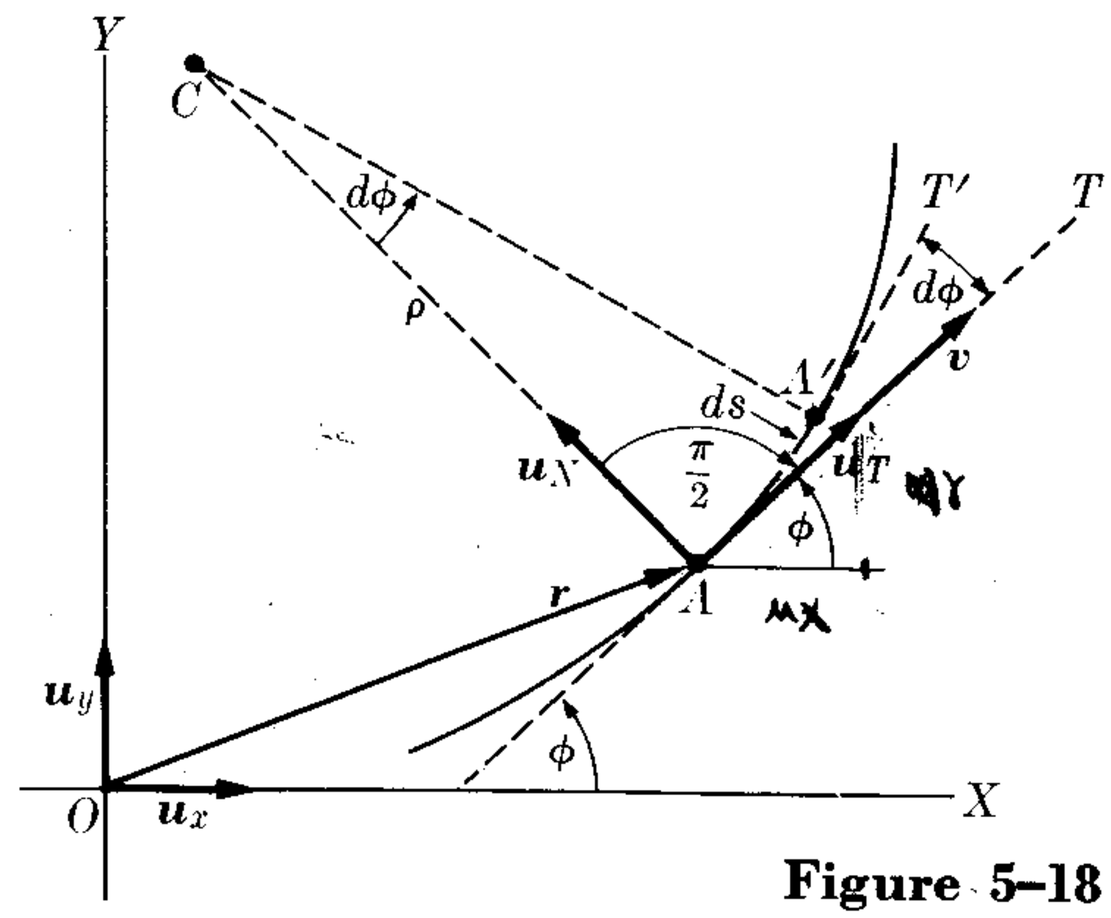

Figure 5–18

5.8 Tangential and Normal Components of Acceleration

Consider a particle describing a curved path (Fig. 5–17). For simplicity we shall assume that the curve is plane but the results we shall derive will be valid for motion along any curve. At time t the particle is at A with velocity $\boldsymbol{v}$ and acceleration $\boldsymbol{a}$. Since $\boldsymbol{a}$ is pointing toward the concave side of the path, we may decompose it into a tangential component $\boldsymbol{a}_T$—parallel to the tangent AT and called *tangential acceleration*—and a normal component $\boldsymbol{a}_N$—parallel to the normal AN and called *normal acceleration*. Each of these components has a well-defined physical meaning. When the particle moves, the magnitude of the velocity may change, and this change is related to the tangential acceleration. Also the direction of the velocity changes, and this change is related to the normal acceleration. That is:

Change in magnitude of velocity: tangential acceleration.

Change in direction of velocity: normal acceleration.

Let us draw at A (Fig. 5–18) the unit vector $\boldsymbol{u}_T$ tangent to the curve. The velocity, according to Eq. (5.23), is expressed as $\boldsymbol{v} = \boldsymbol{u}_T v$. Thus the acceleration will be

$$\boldsymbol{a} = \frac{d\boldsymbol{v}}{dt} = \frac{d}{dt}(\boldsymbol{u}_T v) = \boldsymbol{u}_T \frac{dv}{dt} + \frac{d\boldsymbol{u}_T}{dt} v.$$

If the path were a straight line, the vector $\boldsymbol{u}_T$ would be constant in magnitude and direction and $d\boldsymbol{u}_T/dt = 0$. But when the path is curved, the *direction* of $\boldsymbol{u}_T$ varies along the curve, giving a nonvanishing value for $d\boldsymbol{u}_T/dt$. To proceed we must compute $d\boldsymbol{u}_T/dt$. Let us introduce the unit vector $\boldsymbol{u}_N$, normal to the curve and directed toward the concave side. Letting ϕ be the angle that the tangent to the curve at A makes with the X-axis, we may write, using Eq. (3.9),

$$\boldsymbol{u}_T = \boldsymbol{u}_x \cos\phi + \boldsymbol{u}_y \sin\phi,$$

$$\boldsymbol{u}_N = \boldsymbol{u}_x \cos\left(\phi + \frac{\pi}{2}\right) + \boldsymbol{u}_y \sin\left(\phi + \frac{\pi}{2}\right)$$

$$= -\boldsymbol{u}_x \sin\phi + \boldsymbol{u}_y \cos\phi.$$

Thus

$$\frac{d\boldsymbol{u}_T}{dt} = -\boldsymbol{u}_x \sin\phi \frac{d\phi}{dt} + \boldsymbol{u}_y \cos\phi \frac{d\phi}{dt} = \boldsymbol{u}_N \frac{d\phi}{dt}.$$

This indicates that $d\boldsymbol{u}_T/dt$ is normal to the curve. Now

$$\frac{d\phi}{dt} = \frac{d\phi}{ds}\frac{ds}{dt} = v\frac{d\phi}{ds},$$

where $ds = AA'$ is the small arc through which the particle moved in the time dt. The normals to the curve at A and A' intersect at a point C called the *center of curvature*. Calling $\rho = CA$ the *radius of curvature* and using Eq. (2.4), we may write $ds = \rho\, d\phi$ or $d\phi/ds = 1/\rho$. Thus $d\phi/dt = v/\rho$ and

$$\frac{d\boldsymbol{u}_T}{dt} = \boldsymbol{u}_N \frac{v}{\rho}. \tag{5.42}$$

Introducing this result in the expression for $d\boldsymbol{v}/dt$, we finally obtain

$$\boldsymbol{a} = \boldsymbol{u}_T \frac{dv}{dt} + \boldsymbol{u}_N \frac{v^2}{\rho}. \tag{5.43}$$

The first term $[\boldsymbol{u}_T(dv/dt)]$ is a vector tangent to the curve, and is proportional to the time rate of change of the magnitude of the velocity; it corresponds to the tangential acceleration $\boldsymbol{a}_T$. The second term $[\boldsymbol{u}_N(v^2/\rho)]$ is a vector normal to the curve, and corresponds to the normal acceleration $\boldsymbol{a}_N$. It is associated with the change in direction because it corresponds to $d\boldsymbol{u}_T/dt$. For the magnitudes, we may write

$$a_T = \frac{dv}{dt}, \qquad a_N = \frac{v^2}{\rho}. \tag{5.44}$$

The magnitude of the acceleration at point A is then

$$a = \sqrt{a_T^2 + a_N^2} = \sqrt{(dv/dt)^2 + (v^4/\rho^2)}.$$

If the curvilinear motion is uniform (i.e., if the magnitude of the velocity remains constant), $v =$ constant, so that $a_T = 0$ and there is no tangential acceleration. On the other hand, if the motion is rectilinear (i.e., if the direction of the velocity does not change), the radius of curvature is infinite ($\rho = \infty$), so that $a_N = 0$ and there is no normal acceleration. It must be pointed out that the results we have obtained are valid for plane motion as well as for motion in space.

EXAMPLE 5.9. A disk D (Fig. 5–19) is rotating freely about its horizontal axis. A cord is wrapped around the outer circumference of the disk, and a body A, attached to the cord, falls under the action of gravity. The motion of A is uniformly accelerated but, as will be seen in Chapter 10, its acceleration is less than that due to gravity. At $t = 0$ the velocity of body A is 0.04 m s^{-1}, and 2 s later A has fallen 0.2 m. Find the tangential and normal accelerations, at any instant, of any point on the rim of the disk.

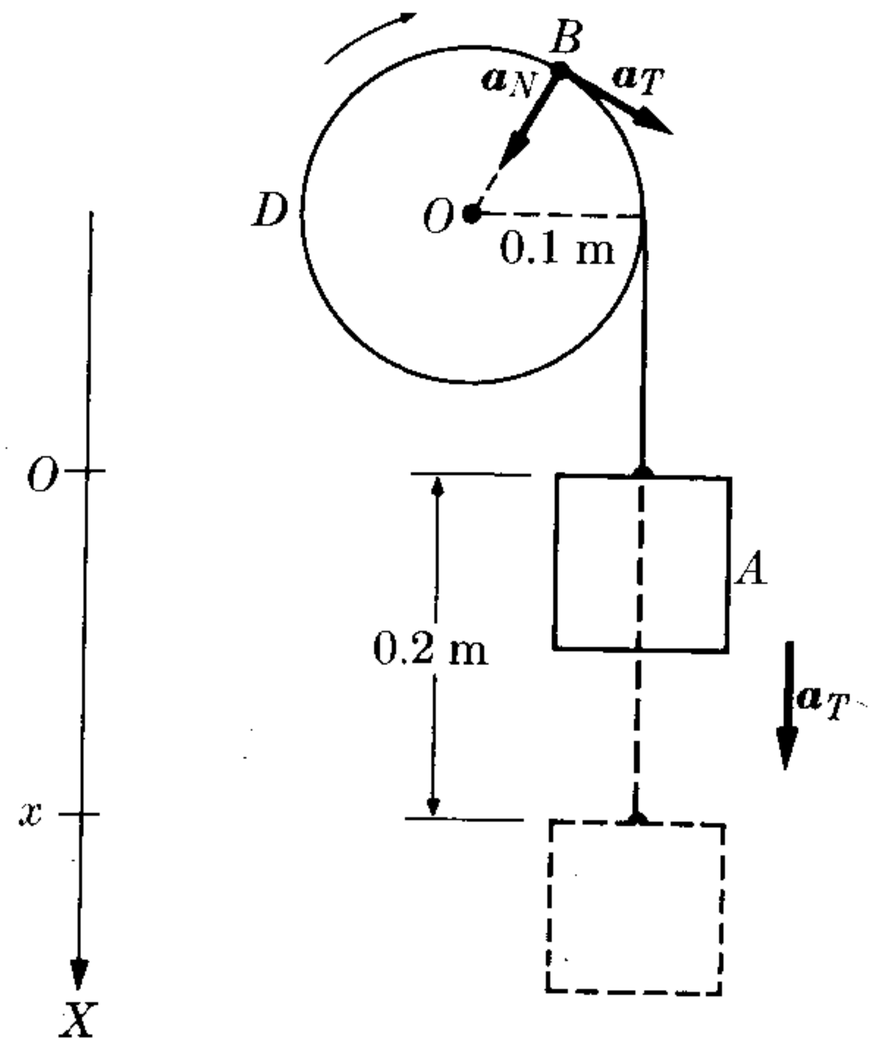

(a)

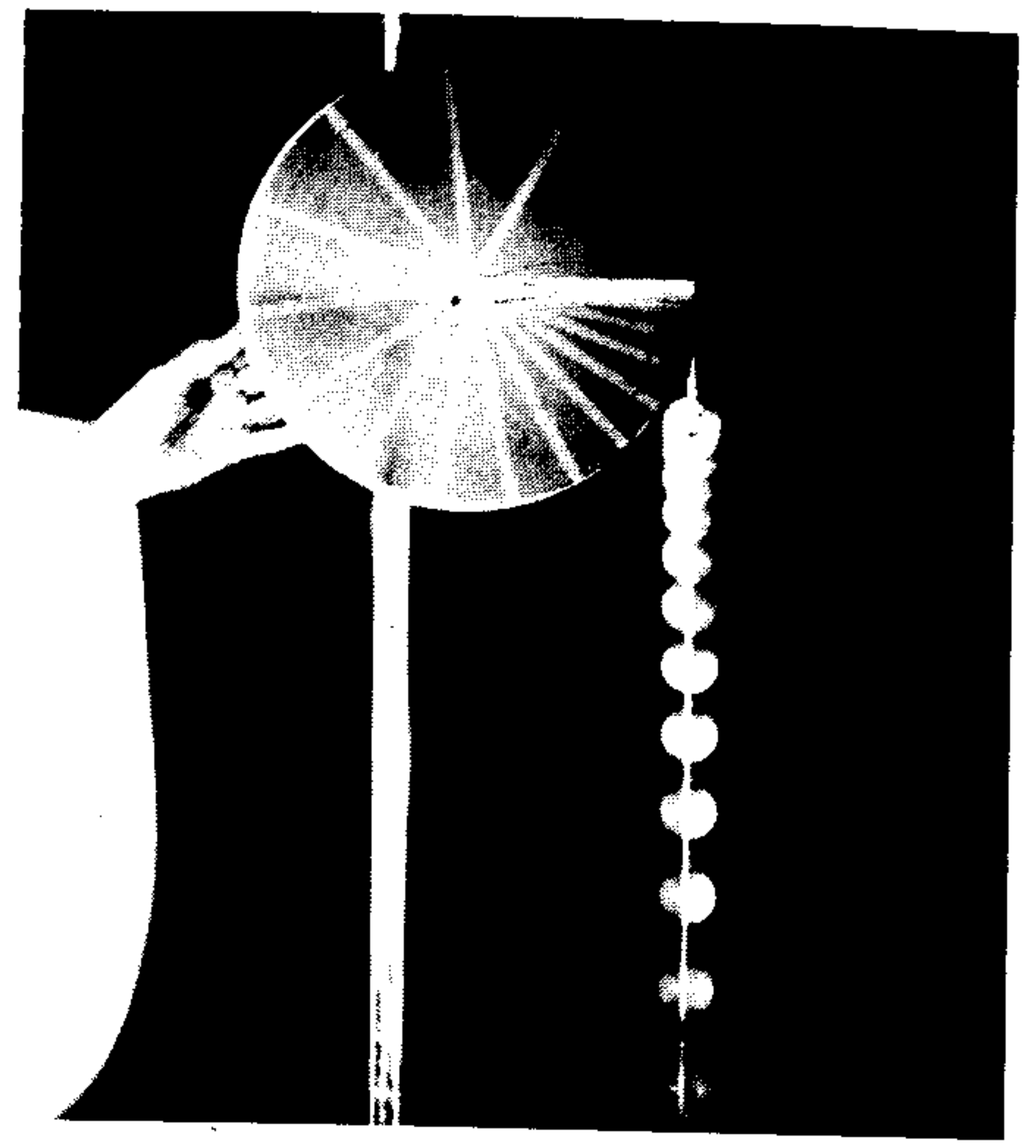

(b)

Fig. 5–19. The multiflash photograph in (b) shows that the mass falls with uniformly accelerated motion. (Verify this by taking actual measurements on the photograph.)

Solution: Given that the origin of coordinates is at the position $t = 0$, the equation of the uniformly accelerated motion of A is $x = v_0t + \frac{1}{2}at^2$. But we know that $v_0 = 0.04 \text{ m s}^{-1}$. Thus

$$x = 0.04t + \tfrac{1}{2}at^2 \text{ m}.$$

Setting $t = 2$ s, we must have $x = 0.2$ m. Thus $a = 0.06 \text{ m s}^{-2}$. That is,

$$x = 0.04t + 0.03t^2 \text{ m}.$$

Therefore the velocity of A is

$$v = \frac{dx}{dt} = 0.04 + 0.06t \text{ m s}^{-1}.$$

This equation also gives the velocity of any point B on the rim of the disk. The tangential acceleration of B is thus the same as the acceleration of A,

$$a_T = \frac{dv}{dt} = 0.06 \text{ m s}^{-2},$$

while, since $\rho = 0.1$ m, the normal acceleration of B is

$$a_N = \frac{v^2}{\rho} = \frac{(0.04 + 0.06t)^2}{0.1} = 0.016 + 0.048t + 0.036t^2 \text{ m s}^{-2}.$$

The total acceleration of point B is thus $a = \sqrt{a_T^2 + a_N^2}$.

5.9 Circular Motion: Angular Velocity

Let us now consider the special case in which the path is a circle; i.e., *circular motion*. The velocity $\boldsymbol{v}$, being tangent to the circle, is perpendicular to the radius $R = CA$. When we measure distances along the circumference of the circle from point O, we have, from Fig. 5–20, that $s = R\theta$, according to Eq. (2.5). Therefore, applying Eq. (5.23) and considering the fact that R remains constant, we obtain

$$v = \frac{ds}{dt} = R\frac{d\theta}{dt}. \tag{5.45}$$

The quantity

$$\omega = \frac{d\theta}{dt} \tag{5.46}$$

is called *angular velocity*, and is equal to the time rate of change of the angle. It is expressed in radians per second, rad s^{-1}, or simply s^{-1}. Then

$$v = \omega R. \tag{5.47}$$

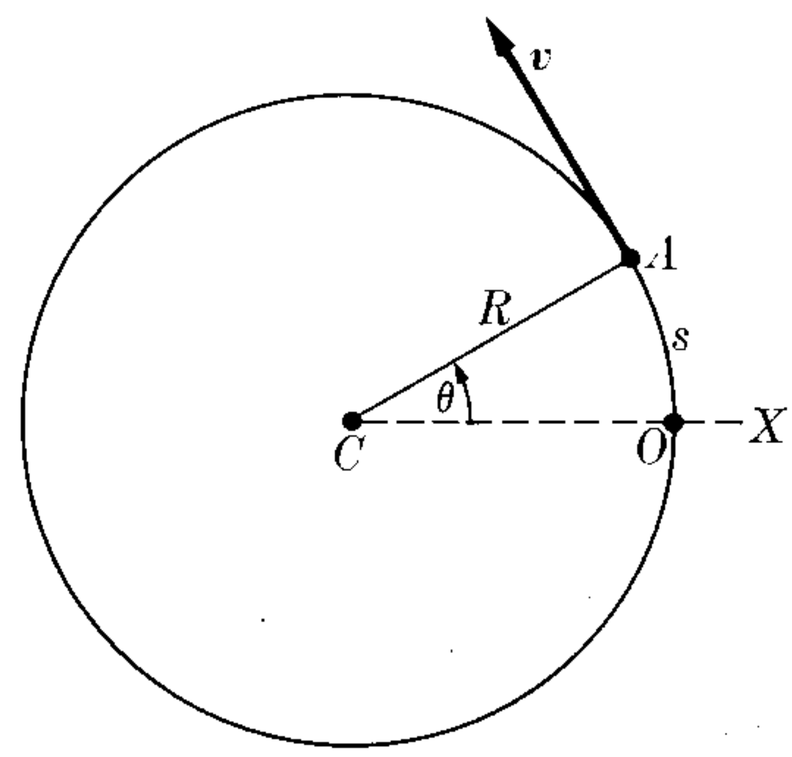

Fig. 5–20. Circular motion.

The angular velocity may be expressed as a vector quantity whose direction is perpendicular to the plane of motion in the sense of advance of a right-handed screw rotated in the same sense as the particle moves (Fig. 5–21). From the figure we see that $R = r \sin \gamma$ and that $\boldsymbol{\omega} = \boldsymbol{u}_z\, d\theta/dt$; therefore we may write, instead of Eq. (5.47),

$$v = \omega r \sin \gamma,$$

indicating that the following vector relation holds, both in magnitude and direction:

$$\boldsymbol{v} = \boldsymbol{\omega} \times \boldsymbol{r}. \tag{5.48}$$

Note that this is valid only for circular or rotational motion (motion with constant r and γ).

Of special interest is the case of *uniform circular motion*; i.e., motion with $\omega =$ constant. In this case, the motion is periodic and the particle passes through each point of the circle at regular intervals of time. The *period* P is the time required for a complete turn or revolution, and the *frequency* ν is the number of revolutions per unit time. So if in time t the particle makes n revolutions, the period is $P = t/n$ and the frequency is $\nu = n/t$. Both quantities are then

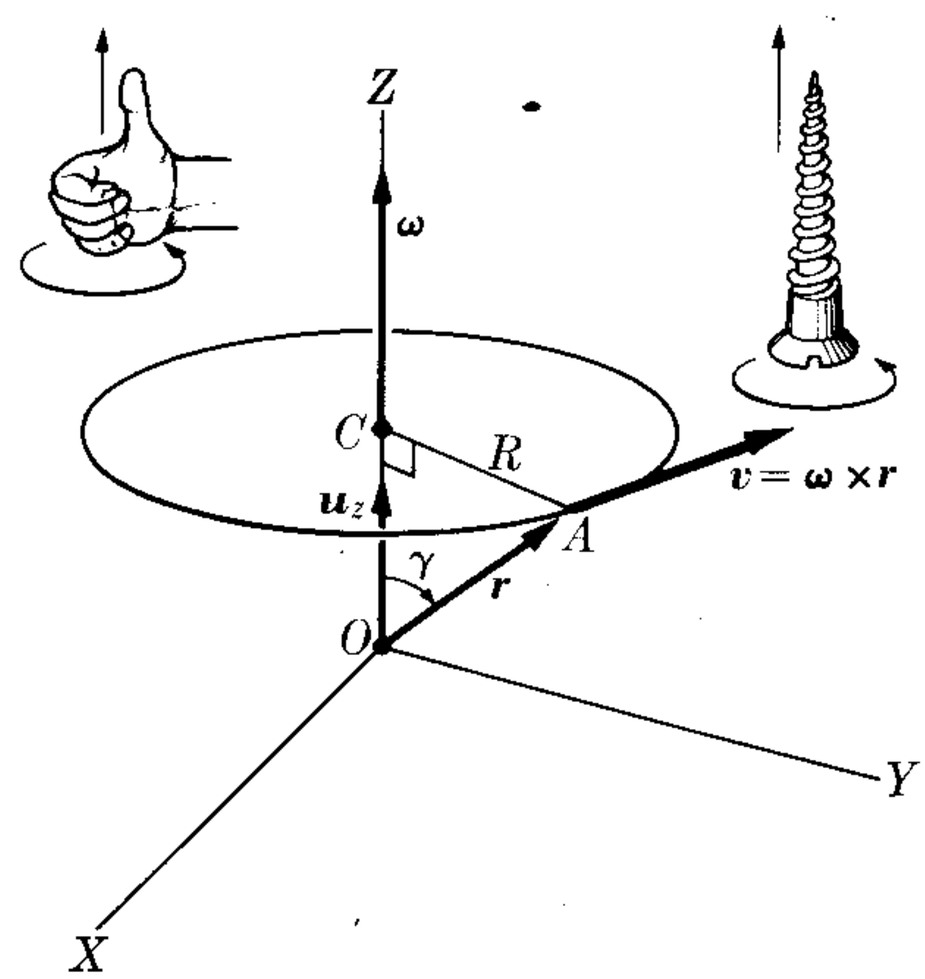

Fig. 5–21. Vector relation between angular velocity, linear velocity, and position vector in circular motion.

related by the following expression, which we shall often use,

$$\nu = \frac{1}{P}. \tag{5.49}$$

When the period is expressed in seconds, the frequency must be expressed in (seconds)$^{-1}$ or s^{-1}, which is a unit called a *hertz*, abbreviated Hz. The colloquial term is revolutions per second (rps) instead of s^{-1} or Hz. The unit was named hertz after the German physicist H. R. Hertz (1857–1894), who was the first to prove experimentally the existence of electromagnetic waves. Sometimes the frequency of a motion is expressed in revolutions per minute (rpm), which is the same as saying (minute)$^{-1}$. Obviously 1 min^{-1} = $\frac{1}{60}$ Hz.

The concepts of period and frequency are applicable to all periodic processes that occur in cyclic form; that is, those processes that repeat themselves after completing each cycle. For example, the motion of the earth around the sun is neither circular nor uniform, but periodic. It is a motion that repeats itself every time the earth completes one orbit. The *period* is the time required to complete one cycle, and the *frequency* is the number of cycles per second, one hertz corresponding to one cycle per second.

If ω is constant, we have, integrating Eq. (5.46),

$$\omega = \frac{d\theta}{dt} \Rightarrow \int_{\theta_0}^{\theta} d\theta = \int_{t_0}^{t} \omega\, dt = \omega \int_{t_0}^{t} dt \qquad \text{or} \qquad \theta = \theta_0 + \omega(t - t_0).$$

The student should compare this relation, which is valid for uniform circular motion, with the comparable expression for uniform rectilinear motion obtained in Example 5.2. Usually one sets $\theta_0 = 0$ and $t_0 = 0$, giving

$$\theta = \omega t \qquad \text{or} \qquad \omega = \frac{\theta}{t}. \tag{5.50}$$

For a complete revolution, $t = P$ and $\theta = 2\pi$, resulting in

$$\omega = \frac{2\pi}{P} = 2\pi\nu. \tag{5.51}$$

EXAMPLE 5.10. Find the angular velocity of the earth about its axis.

Solution: The first impulse of the student would naturally be to use Eq. (5.51), with $\omega = 2\pi/P$, and write for the period P the value of 8.640×10^4 s, corresponding to one mean solar day. However, if one worked it out this way, the result would be incorrect. Let us refer to Fig. 5–22 (not drawn to scale) and consider a point P. When the earth has completed one revolution about its polar axis, which is called a *sidereal* day, it will then be at E', due to its translational motion, and the point will be at P'. But to complete one day, the earth still has to rotate through the angle γ until the point is at P'', again facing the sun. The period of revolution of the earth (sidereal day) is then slightly less than 8.640×10^4 s. Its measured value is

$$P = 8.616 \times 10^4 \text{ s},$$

or about 240 s shorter than the mean solar day. The angular velocity of the earth is then

$$\omega = \frac{2\pi}{P} = 7.292 \times 10^{-5} \text{ rad s}^{-1}.$$

It is relatively simple to estimate this difference of 240 s. The earth covers its complete orbit around the sun in 365 days, which means that the angle γ corresponding to one day is slightly less than 1° or 0.01745 radian. The time required to move through this angle with the angular velocity given above is, by Eq. (5.50),

$$t = \frac{\theta}{\omega} = \frac{1.745 \times 10^{-2} \text{ rad}}{7.292 \times 10^{-5} \text{ rad s}^{-1}} = 239 \text{ s},$$

which is in excellent agreement with our previous result.

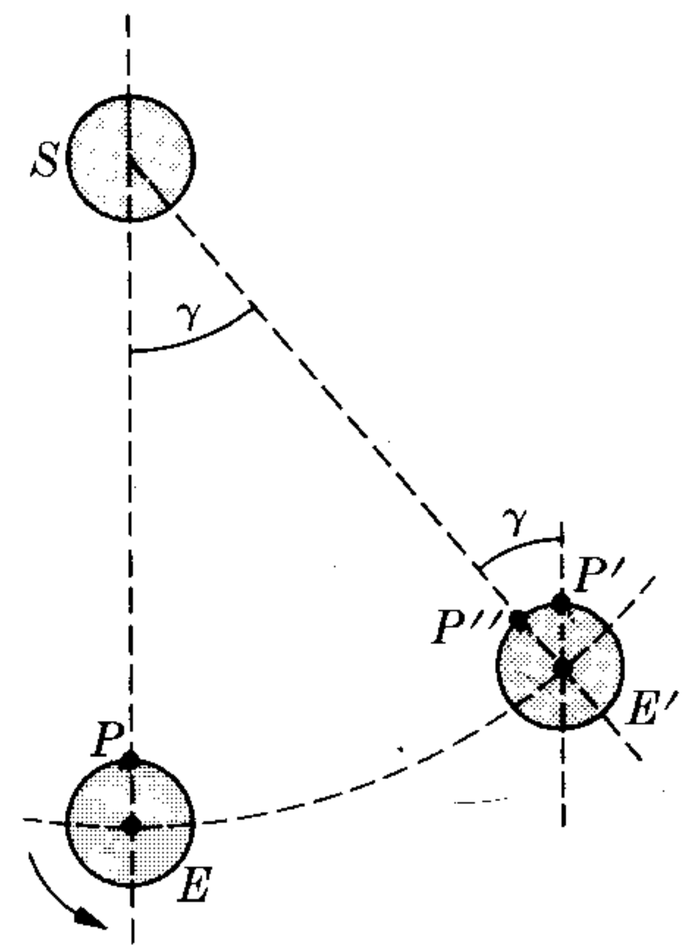

Fig. 5–22. Sidereal day.

5.10 Circular Motion: Angular Acceleration

When the angular velocity of a particle changes with time, the angular acceleration is defined by the vector

$$\boldsymbol{\alpha} = \frac{d\boldsymbol{\omega}}{dt}. \tag{5.52}$$

Since the circular motion is plane, the direction of $\boldsymbol{\omega}$ remains the same, and the relation Eq. (5.52) also holds for the magnitudes of the quantities involved. That is,

$$\alpha = \frac{d\omega}{dt} = \frac{d^2\theta}{dt^2}. \tag{5.53}$$

When the angular acceleration is constant (i.e., when the circular motion is uniformly accelerated), we have, by integration of Eq. (5.53),

$$\int_{\omega_0}^{\omega} d\omega = \int_{t_0}^{t} \alpha\, dt = \alpha \int_{t_0}^{t} dt$$

or

$$\omega = \omega_0 + \alpha(t - t_0), \tag{5.54}$$

where ω_0 is the value of ω at time t_0. Substituting Eq. (5.54) in (5.46), we obtain $d\theta/dt = \omega_0 + \alpha(t - t_0)$, and integrating again,

$$\int_{\theta_0}^{\theta} d\theta = \int_{t_0}^{t} \omega_0\, dt + \alpha \int_{t_0}^{t} (t - t_0)\, dt,$$

so that

$$\theta = \theta_0 + \omega_0(t - t_0) + \tfrac{1}{2}\alpha(t - t_0)^2. \tag{5.55}$$

This gives the angular position at any time.

In the particular case of circular motion, we find, combining Eqs. (5.43) and (5.47) with Eq. (5.53), that the tangential (or transverse) acceleration is

$v = R\omega$

$$a_T = \frac{dv}{dt} = R\frac{d\omega}{dt} = R\frac{d^2\theta}{dt^2} = R\alpha, \tag{5.56}$$

and the normal (or centripetal) acceleration is

$$a_N = \frac{v^2}{R} = \omega^2 R. \tag{5.57}$$

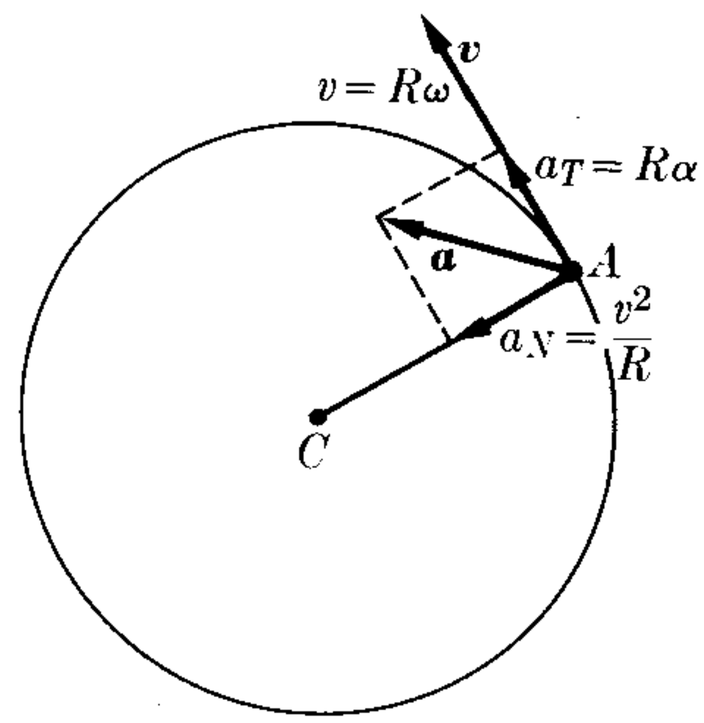

Fig. 5–23. Tangential and normal acceleration in circular motion.

The tangential and normal components of the acceleration in circular motion are illustrated in Fig. 5–23.

Note that in uniform circular motion (no angular acceleration, $\alpha = 0$), there is no tangential acceleration, but there is still a normal or centripetal acceleration due to the change in the direction of the velocity.

In this case of uniform circular motion we may compute the acceleration directly by using Eq. (5.48). Then, since ω is constant,

$$\boldsymbol{a} = \frac{d\boldsymbol{v}}{dt} = \boldsymbol{\omega} \times \frac{d\boldsymbol{r}}{dt} = \boldsymbol{\omega} \times \boldsymbol{v}, \tag{5.58}$$

since $d\boldsymbol{r}/dt = \boldsymbol{v}$. Using Eq. (5.48) again, we may write the acceleration in the alternative form

$$\boldsymbol{a} = \boldsymbol{\omega} \times (\boldsymbol{\omega} \times \boldsymbol{r}). \tag{5.59}$$

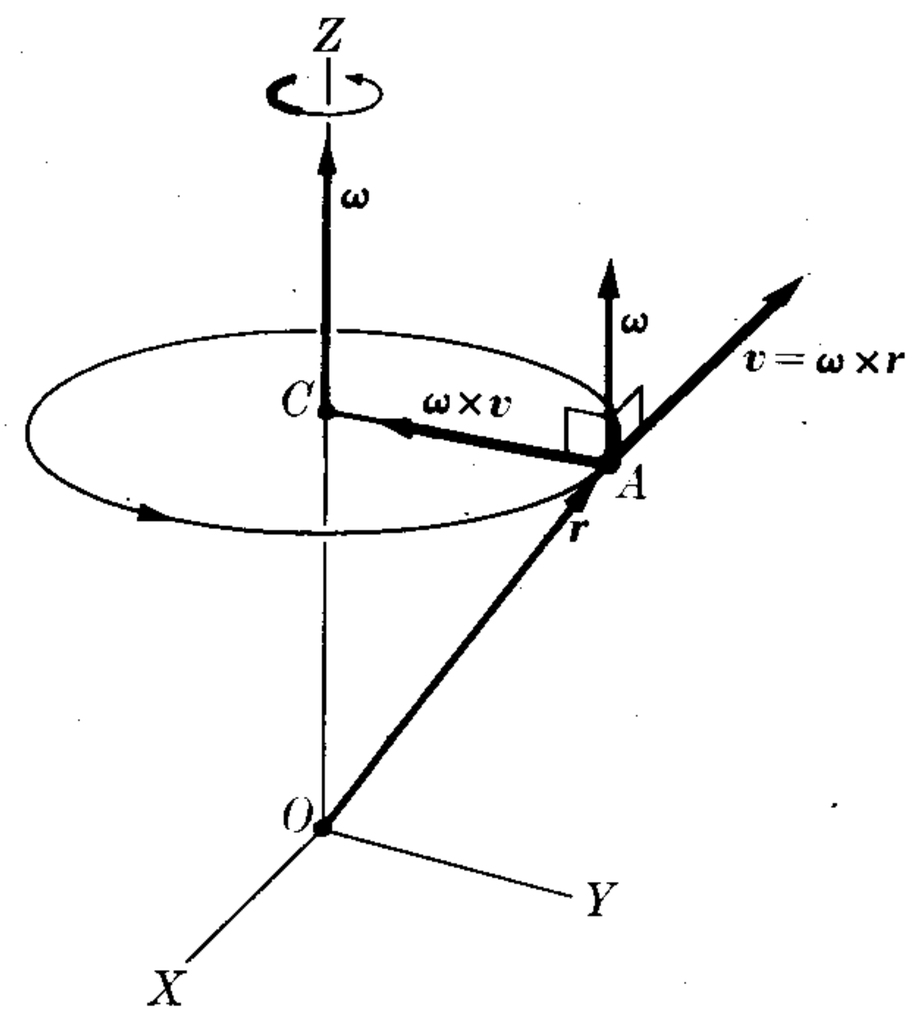

Figure 5–24

Since the circular motion is uniform, the acceleration given by Eqs. (5.58) or (5.59) must be the centripetal acceleration. This can be verified very easily. Referring to Fig. 5–24, we see that the vector $\boldsymbol{\omega} \times \boldsymbol{v}$ points toward the center of the circle, and its magnitude is $|\boldsymbol{\omega} \times \boldsymbol{v}| = \omega v = \omega^2 R$, since $\boldsymbol{\omega}$ and $\boldsymbol{v}$ are perpendicular and $v = \omega R$. This value coincides with our previous result (5.57).

EXAMPLE 5.11. The earth rotates uniformly about its axis with an angular velocity $\omega = 7.292 \times 10^{-5}\ \mathrm{s}^{-1}$. Find, in terms of the latitude, the velocity and the acceleration of a point on the earth's surface.

Solution: Due to the rotational motion of the earth, all points on its surface move with uniform circular motion. The latitude of point A (Fig. 5–25) is defined as the angle λ

made by the radius $r = CA$ with the radius CD lying on the equator. When the earth rotates around NS, a point such as A describes a circle of center B and radius $R = AB$ such that

$$R = r \cos \lambda.$$

The velocity of a point on the earth's surface is tangent to the circle, and thus parallel to the equator. Its magnitude, by Eq. (5.47), is

$$v = \omega R = \omega r \cos \lambda.$$

The acceleration a is centripetal because the motion is uniform, and is thus directed toward B. Its magnitude, by Eq. (5.57), is

$$a = \omega^2 R = \omega^2 r \cos \lambda. \qquad (5.60)$$

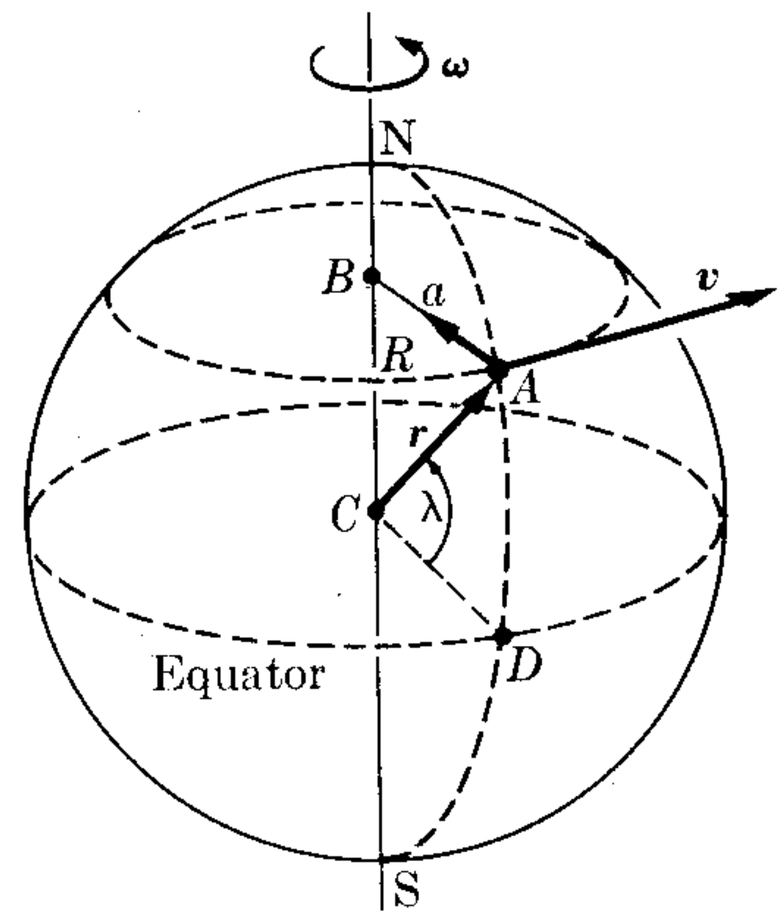

Fig. 5–25. Velocity and acceleration of a point on the earth.

Introducing the values of the angular velocity ($\omega = 7.292 \times 10^{-5}\ \mathrm{s}^{-1}$) and of the radius of the earth ($r = 6.35 \times 10^6$ m), we have

$$v = 459 \cos \lambda\ \mathrm{m\ s^{-1}},$$

and the acceleration is

$$a = 3.34 \times 10^{-2} \cos \lambda\ \mathrm{m\ s^{-2}}. \qquad (5.61)$$

The maximum value of v occurs at the equator, at which $v = 459\ \mathrm{m\ s^{-1}}$ or $1652\ \mathrm{km\ hr^{-1}}$ or about $1030\ \mathrm{mi\ hr^{-1}}$! We do not feel the effects of such great velocity, because we have always been moving at that speed and our bodies and senses are accustomed to it. But we would immediately notice a change in it. Similarly, the maximum value of the acceleration is $3.34 \times 10^{-2}\ \mathrm{m\ s^{-2}}$, which is about 0.3% of the acceleration due to gravity.

5.11 General Curvilinear Motion in a Plane

Consider Fig. 5–26, in which a particle describes a plane curved path. When it is at A, its velocity is given by $\boldsymbol{v} = d\boldsymbol{r}/dt$. Using the unit vectors $\boldsymbol{u}_r$ (parallel to $\boldsymbol{r}$) and $\boldsymbol{u}_\theta$ (perpendicular to $\boldsymbol{r}$), we may write $\boldsymbol{r} = \boldsymbol{u}_r r$. Therefore

$$\boldsymbol{v} = \frac{d\boldsymbol{r}}{dt} = \frac{d}{dt}(\boldsymbol{u}_r r)$$

$$= \boldsymbol{u}_r \frac{dr}{dt} + \frac{d\boldsymbol{u}_r}{dt} r. \qquad (5.62)$$

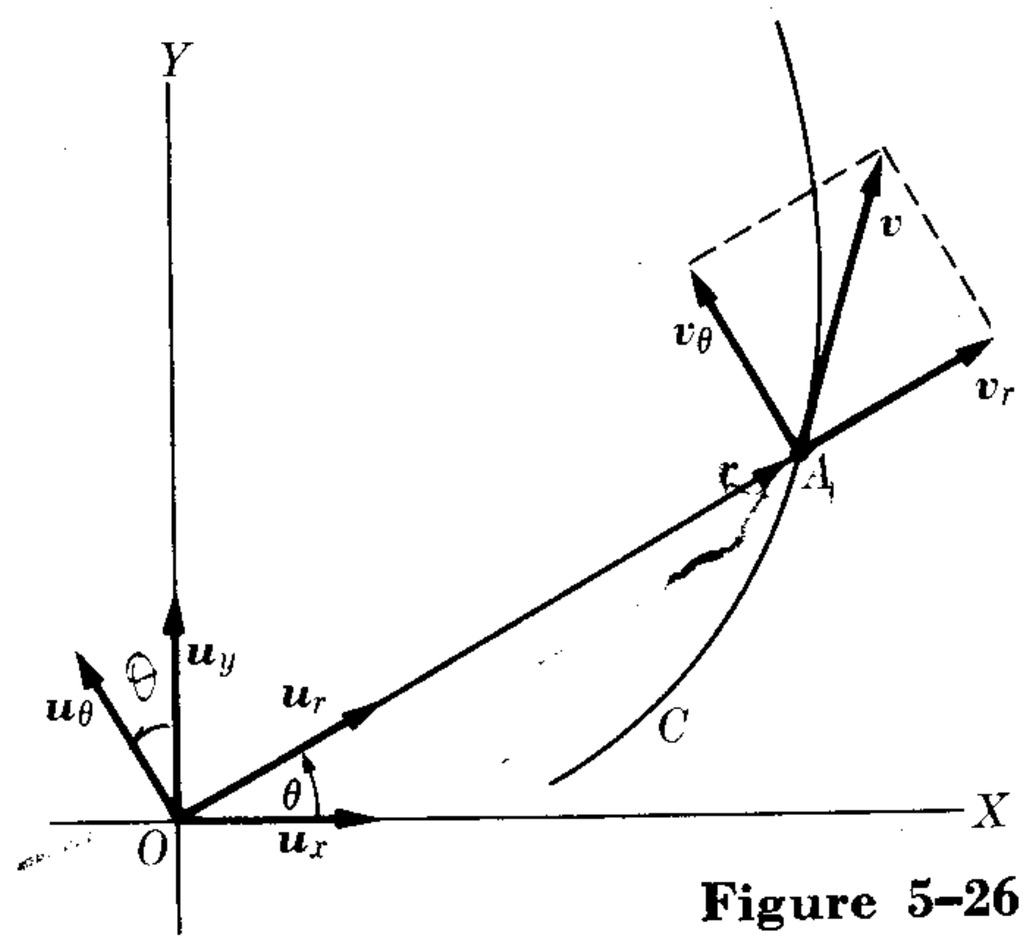

Figure 5–26

Now, using the rectangular components of

the two unit vectors,

$$\boldsymbol{u}_r = \boldsymbol{u}_x \cos\theta + \boldsymbol{u}_y \sin\theta \qquad \text{and} \qquad \boldsymbol{u}_\theta = -\boldsymbol{u}_x \sin\theta + \boldsymbol{u}_y \cos\theta,$$

we see that

$$\frac{d\boldsymbol{u}_r}{dt} = -\boldsymbol{u}_x \sin\theta \frac{d\theta}{dt} + \boldsymbol{u}_y \cos\theta \frac{d\theta}{dt} = \boldsymbol{u}_\theta \frac{d\theta}{dt},$$

and therefore we may write the velocity of the particle as

$$\boldsymbol{v} = \boldsymbol{u}_r \frac{dr}{dt} + \boldsymbol{u}_\theta r \frac{d\theta}{dt}. \tag{5.63}$$

The first part of this equation $[\boldsymbol{u}_r(dr/dt)]$ is a vector parallel to $\boldsymbol{r}$ and is called the *radial velocity*; it is due to the change in the distance r of the particle from O. The second part $[\boldsymbol{u}_\theta r(d\theta/dt)]$ is a vector perpendicular to $\boldsymbol{r}$ and is due to the change in the direction of $\boldsymbol{r}$, or the rotation of the particle around O; it is called the *transverse velocity*. That is,

$$v_r = \frac{dr}{dt}, \qquad v_\theta = r\frac{d\theta}{dt} = \omega r, \tag{5.64}$$

since $\omega = d\theta/dt$ is the angular velocity in this case. In circular motion there is no radial velocity because the radius is constant; that is, $dr/dt = 0$. The velocity is entirely transverse, as we can see by comparing Eq. (5.45) with the second relation in Eq. (5.64).

References

1. "The Perception of Motion," H. Wallach. *Sci. Am.*, July 1959, page 56
2. "Aristotle's Notion of Speed," R. Seeger. *Am. J. Phys.* **31,** 138 (1963)
3. *Mechanics*, Keith R. Symon. Reading, Mass.: Addison-Wesley, 1960, Sections 1–2, 3–4, 3–5, and 3–11
4. *Physical Mechanics*, Robert B. Lindsay. New York: Van Nostrand, 1961, Sections 1–4 and 1–5, Chapters 2 and 3
5. *Introduction to Engineering Mechanics*, John V. Huddleston. Reading, Mass.: Addison-Wesley, 1961, Chapter 5, Sections 6–5 and 6–6
6. *Vector Mechanics*, D. E. Christie. New York: McGraw-Hill, 1964, Chapter 5
7. *The Feynman Lectures on Physics*, Volume I. R. P. Feynman, R. B. Leighton, and M. L. Sands. Reading, Mass.: Addison-Wesley, 1963, Chapters 5 and 8
8. *Source Book in Physics*, W. F. Magie. Cambridge, Mass.: Harvard University Press, 1963, page 1 (Galileo); page 50 (Descartes); page 51 (Leibniz); page 55 (d'Alembert)
9. *Foundations of Modern Physical Science*, Gerald Holton and D. H. D. Roller. Reading, Mass.: Addison-Wesley, 1958, Chapters 1, 2, and 3

Problems

5.1 An electron falling on a TV screen has a velocity of 3×10^6 m s^{-1}. Assuming that if it has been accelerated from rest through a distance of 0.04 m, find its average acceleration.

5.2 A body is moving with an initial velocity of 3 m s^{-1}, and has a constant acceleration of 4 m s^{-2} in the same direction as the velocity. What is the velocity of the body and the distance covered at the end of 7 s? Solve the same problem for a body whose acceleration is in the direction opposite to that of the velocity. Write the expression for its displacement as a function of time.

5.3 An airplane, in taking off, covers a 600-m path in 15 s. Assuming a constant acceleration, calculate the takeoff velocity. Also calculate the acceleration in m s^{-2}.

5.4 An automobile, starting from rest, reaches 60 km hr^{-1} in 15 s. (a) Calculate the average acceleration in m min^{-2} and the distance moved. (b) Assuming that the acceleration is constant, how many more seconds will it take for the car to reach 80 km hr^{-1}? What has been the total distance covered?

5.5 A car starts from rest and moves with an acceleration of 1 m s^{-2} for 1 s. The motor is then turned off and the car is allowed to decelerate, due to friction, for 10 s at a rate of 5 cm s^{-2}. Then the brakes are applied and the car is brought to rest in 5 more seconds. Calculate the total distance traveled by the car. Make a plot of x, v, and a versus t.

5.6 A body moving with uniformly accelerated rectilinear motion travels 55 ft in 2 s. During the next 2 s, it covers 77 ft. Calculate the initial velocity of the body and its acceleration. How far will it travel in the next 4 s?

5.7 A car travels along the line OX with uniformly accelerated motion. At times t_1 and t_2, its position is x_1 and x_2, respectively. Show that its acceleration is $a = 2(x_2t_1 - x_1t_2)/t_1t_2(t_2 - t_1)$.

5.8 A car starts from rest with an acceleration of 4 m s^{-2} for 4 s. During the next 10 s it moves with uniform motion. The brakes are then applied and the car decelerates at a rate of 8 m s^{-2} until it stops. Make a plot of the velocity versus the time and prove that the area bounded by the curve and the time axis measures the total distance traveled.

5.9 A car is waiting for a red light to change. When the light turns green, the car accelerates uniformly for 6 s at a rate of 2 m s^{-2}, after which it moves with uniform velocity. At the instant that the car began to move at the light, a truck moving in the same direction, with a uniform motion of 10 m s^{-1}, passed by. In what length of time, and how far from the light, will the car and truck meet again?

5.10 An automobile is moving at the rate of 45 km hr^{-1} when a red light flashes on at an intersection. If the reaction time of the driver is 0.7 s, and the car decelerates at the rate of 7 m s^{-2} as soon as the driver applies the brakes, calculate how far the car travels from the time the driver notices the red light until the car is brought to a stop. "Reaction time" is the interval between the time the driver notices the light and the time he applies the brakes.

5.11 Two cars, A and B, are traveling in the same direction with velocities v_A and v_B, respectively. When car A is a distance d behind car B, the brakes on A are applied, causing a deceleration at the rate a. Demonstrate that in order that there be a collision between A and B, it is necessary that $v_A - v_B > \sqrt{2ad}$.

5.12 Two cars, A and B, are moving in the same direction. When $t = 0$, their respective velocities are 1 ft s^{-1} and 3 ft s^{-1}, and their respective accelerations are 2 ft s^{-2} and 1 ft s^{-2}. If car A is 1.5 ft

ahead of car B at $t = 0$, calculate when they will be side by side.

5.13 A body is moving along a straight line according to the law $x = 16t - 6t^2$, where x is measured in meters and t in seconds. (a) Find the position of the body at $t = 1$ s. (b) At what times does the body pass the origin? (c) Calculate the average velocity for the time interval $0 < t < 2$ s. (d) Find the general expression for the average velocity for the interval $t_0 < t < (t_0 + \Delta t)$. (e) Calculate the instantaneous velocity at any given time. (f) Calculate the instantaneous velocity at $t = 0$. (g) At what times and positions will the body be stationary? (h) Find the general expression for the average acceleration for the time interval $t_0 < t < (t_0 + \Delta t)$. (i) Find the general expression for the instantaneous acceleration at any time. (j) At what times is the instantaneous acceleration zero? (k) Plot on a single set of axes x versus t, v versus t, and a versus t. (l) At what times(s) is the motion accelerated and at what time(s) is it retarded?

5.14 A body is moving along a straight line according to the law $v = t^3 + 4t^2 + 2$. If $x = 4$ ft when $t = 2$ s, find the value of x when $t = 3$ s. Also find its acceleration.

5.15 The acceleration of a body moving along a straight line is given by $a = 4 - t^2$, where a is in m s^{-2} and t is in seconds. Find the expressions for the velocity and displacement as functions of time, given that when $t = 3$ s, $v = 2$ m s^{-1} and $x = 9$ m.

5.16 A body is moving along a straight line. Its acceleration is given by $a = -2x$, where x is in feet and a is in ft s^{-2}. Find the relationship between the velocity and the distance, given that when $x = 0$, $v = 4$ ft s^{-1}.

5.17 The acceleration of a body moving along a straight line is given by $a = -Kv^2$, where K is a constant and where it is given that at $t = 0$, $v = v_0$. Find the velocity and the displacement as functions of time. Also find x as a function of t and v as a function of x.

5.18 For a body in rectilinear motion whose acceleration is given by $a = 32 - 4v$ (the initial conditions are $x = 0$ and $v = 4$ at $t = 0$), find v as a function of t, x as a function of t, and x as a function of v.

5.19 The position of a moving body in terms of time is given in Fig. 5–27. Indicate (a) where the motion is in the positive or negative X-direction, (b) when the motion is accelerated or retarded, (c) when the body passes through the origin, and (d) when the velocity is zero. Also make a sketch of the velocity and the acceleration as functions of time. Estimate from the graph the average velocity between (a) $t = 1$ s and $t = 3$ s, (b) $t = 1$ s and $t = 2.2$ s, (c) $t = 1$ s and $t = 1.8$ s.

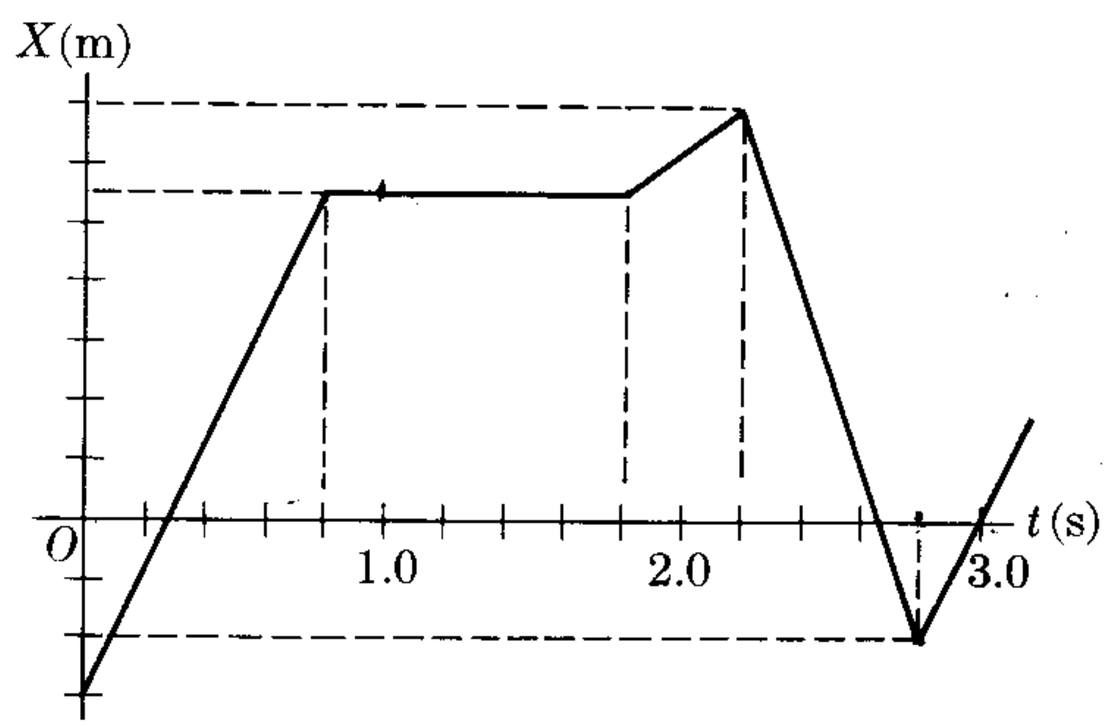

Fig. 5–27. Acceleration due to the earth's rotation.

5.20 A stone falls from a balloon that is descending at a uniform rate of 12 m s^{-1}. Calculate the velocity and the distance traveled by the stone after 10 s. Solve the same problem for the case of a balloon rising at the given velocity.

5.21 A stone is thrown vertically upward with a velocity of 20 m s^{-1}. When will its velocity be 6 m s^{-1} and what will its altitude be?

5.22 A stone is thrown upward from the bottom of a well 88 ft deep with an initial

velocity of 240 ft s^{-1}. Calculate the amount of time it will take the stone to reach the edge of the well, and its velocity. Discuss the possible answers.

5.23 A man standing at the top of a building throws a ball vertically upward with a velocity of 40 ft s^{-1}. The ball reaches the ground 4.25 s later. What is the maximum height reached by the ball? How high is the building? With what velocity will it reach the ground?

5.24 A falling body travels 224 ft in the last second of its motion. Assuming that the body started from rest, determine the altitude from which the body fell and how long it took to reach the ground.

5.25 A stone is thrown vertically upward from the roof of a building with a velocity of 29.4 m s^{-1}. Another stone is dropped 4 s after the first is thrown. Prove that the first stone will pass the second exactly 4 s after the second was dropped.

5.26 One body is dropped while a second body, at the same instant, is thrown downward with an initial velocity of 100 cm s^{-1}. When will the distance between them be 18 m?

5.27 Two bodies are thrown vertically upward, with the same initial velocity of 100 cm s^{-1}, but 4 s apart. How long after the first one is thrown will they meet?

5.28 A body is allowed to drop freely. Show that the distance it travels during the nth second is $(n - \frac{1}{2})g$.

5.29 A stone is dropped from the top of a building. The sound of the stone hitting the ground is heard 6.5 s later. If the velocity of sound is 1120 ft s^{-1}, calculate the height of the building.

5.30 Calculate the angular velocity of a disk rotating with uniform motion of 13.2 rad every 6 s. Also calculate the period and frequency of rotation.

5.31 How long will it take the disk in the previous problem (a) to rotate through an angle of 780°, and (b) to make 12 revolutions?

5.32 Calculate the angular velocity of the three hands of a clock.

5.33 Calculate the angular velocity, the linear velocity, and the centripetal acceleration of the moon, deriving your answer from the fact that the moon makes a complete revolution in 28 days and that the average distance from the earth to the moon is 38.4×10^4 km.

5.34 Find (a) the magnitude of the velocity and (b) the centripetal acceleration of the earth in its motion around the sun. The radius of the earth's orbit is 1.49×10^{11} m and its period of revolution is 3.16×10^7 s.

5.35 Find the magnitude of the velocity and the centripetal acceleration of the sun in its motion through the Milky Way. The radius of the sun's orbit is 2.4×10^{20} m and its period of revolution is 6.3×10^{15} s.

5.36 A flywheel whose diameter is 3 m is rotating at 120 rpm. Calculate: (a) its frequency, (b) the period, (c) the angular velocity, and (d) the linear velocity of a point on the rim.

5.37 The angular velocity of a flywheel increases uniformly from 20 rad s^{-1} to 30 rad s^{-1} in 5 ~~min.~~ SECONDS Calculate the angular acceleration and the total angle through which it has rotated.

5.38 A flywheel whose diameter is 8 ft has an angular velocity which decreases uniformly from 100 rpm at $t = 0$ to a standstill at $t = 4$ s. Calculate the tangential and the normal acceleration of a point on the rim of the wheel at $t = 2$ s.

5.39 An electron whose velocity is 4.0×10^5 m s^{-1} is acted on by a magnetic field that forces it to describe a circular path of radius 3.0 m. Find its centripetal acceleration.

5.40 A body, initially at rest ($\theta = 0$ and $\omega = 0$ at $t = 0$) is accelerated in a circular path of radius 1.3 m according to the equation $\alpha = 120t^2 - 48t + 16$. Find the angular position and angular velocity

of the body as functions of time, and the tangential and centripetal components of its acceleration.

5.41 A point is moving on a circle according to the law $s = t^3 + 2t^2$, where s is measured in feet along the circle and t is in seconds. If the total acceleration of the point is $16\sqrt{2}$ ft s^{-2} when $t = 2$ s, calculate the radius of the circle.

5.42 A particle is moving in a circle according to the law $\theta = 3t^2 + 2t$, where θ is measured in radians and t in seconds. Calculate the angular velocity and angular acceleration after 4 s.

5.43 A wheel starts from rest and accelerates in such a manner that its angular velocity increases uniformly to 200 rpm in 6 s. After it has been rotating for some time at this speed, the brakes are applied, and it takes 5 min to stop the wheel. If the total number of revolutions of the wheel is 3100, calculate the total time of rotation.

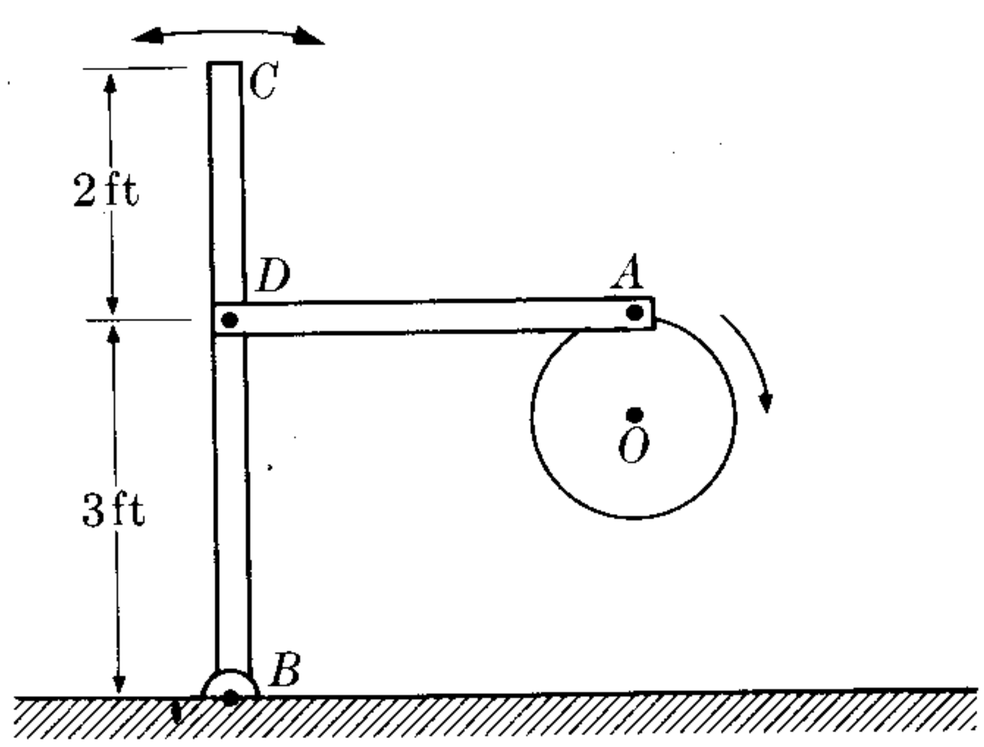

Figure 5–28

5.44 The rod BC in Fig. 5–28 is oscillating due to the action of the rod AD. The point A is attached to the rim of a flywheel whose diameter is 9 in. and which is rotating at an angular velocity of 60 rpm and an angular acceleration of 6 rad s^{-2}. Calculate (a) the linear velocity at the point D, (b) the angular velocity of BC, (c) the tangential and normal accelerations of point C, (d) the angular acceleration of BC, (e) the tangential acceleration at D.

5.45 A flywheel 4 ft in radius is rotating about a horizontal axis by means of a rope wound about its rim and having a weight at its end. If the vertical distance traveled by the weight is given by the equation $x = 40t^2$, where x is measured in feet and t in seconds, calculate the angular velocity and acceleration of the flywheel at any time.

5.46 The angular position of a particle moving along the circumference of a circle 5 ft in radius is given by the expression $\theta = 3t^2$, where θ is given in radians and t in seconds. Calculate the tangential, normal, and total acceleration of the particle when $t = 0.5$ s.

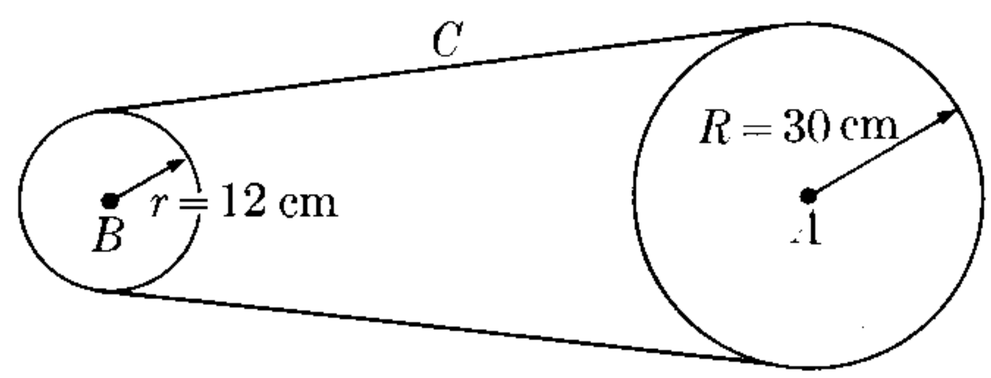

Figure 5–29

5.47 The wheel A (Fig. 5–29) whose radius is 30 cm starts moving from rest and increases its angular velocity uniformly at the rate of 0.4π rad s^{-1}. It transmits its motion to the wheel B by means of the belt C. Obtain a relation between the angular velocities and the radii of the two wheels. Find the time necessary for wheel B to reach an angular velocity of 300 rpm.

5.48 A ball is moving due north at 300 cm s^{-1} when a force is applied for 40 s, causing an acceleration of 10 cm s^{-2} due east, after which the force is removed. Determine (a) the magnitude and direction of the ball's final velocity, (b) the equation of its path, (c) its distance from the starting point, (d) its displacement from the starting point.

5.49 A train is moving at 72 km hr^{-1} when a lantern which is hanging on the end of the train, 4.9 m above the ground, shakes loose. Calculate the distance covered by the train in the time it takes for the lamp to fall to the ground. Where does

the lamp fall relative to the train and to the tracks? What is its path relative to the train and to the track?

5.50 A car is traveling in a plane curve such that its rectangular coordinates, as a function of time, are given by $x = 2t^3 - 3t^2$, $y = t^2 - 2t + 1$. Assuming that t is given in seconds and the coordinates in meters, calculate (a) the position of the car when $t = 1$ s, (b) the rectangular components of the velocity at any time, (c) the rectangular components of the velocity when $t = 1$ s, (d) the velocity at any time, (e) the velocity when $t = 0$ s, (f) the time(s) when the velocity is zero, (g) the rectangular components of the acceleration at any time, (h) the rectangular components of the acceleration when $t = 1$ s, (i) the acceleration at any time, (j) the acceleration when $t = 0$ s, (k) the time(s) at which the acceleration will be parallel to the Y-axis.

5.51 A baseball player hits the ball so that it has a velocity of 48 ft s^{-1} and an angle of 30° above the horizontal. A second player, standing 100 ft from the batter and in the same plane as the ball's trajectory, begins to run the instant the ball is struck. Calculate his minimum velocity if he can reach up to 8 ft above the ground and the ball was 3 ft high when it was struck. How far did the second player have to run?

5.52 The coordinates of a moving particle are given by $x = t^2$, $y = (t - 1)^2$. Find its average velocity and acceleration in the time interval between t and $t + \Delta t$. Apply the results to the case when $t = 2$ s and $\Delta t = 1$ s, and compare with the values of the velocity and acceleration at $t = 2$ s. Graphically represent all vectors involved.

5.53 The position of a particle at time t is given by $x = A \sin \omega t$. Find its velocity and acceleration as a function of t and of x.

5.54 A point is moving with constant speed of 3 ft s^{-1}. The velocity has a direction such that it makes an angle of $(\pi/2)t$ rad with the positive OX-axis. If $x = y = 0$ when $t = 0$, find the equation of the trajectory of the particle.

5.55 The coordinates of a moving body are $x = t^2$, $y = (t - 1)^2$. (a) Find the Cartesian equation of the trajectory. [*Hint:* Eliminate t from the above equations.] (b) Draw a graph of the trajectory. (c) When is the velocity a minimum? (d) Find the coordinates when the velocity is 10 ft s^{-1}. (e) Calculate the tangential and normal accelerations at any time. (f) Calculate the tangential and normal accelerations when $t = 1$ s.

5.56 A particle is moving along a parabola $y = x^2$ in such a manner that at any time $v_x = 3$ ft s^{-1}. Calculate the magnitude and direction of the velocity and the acceleration of the particle at the point $x = \frac{2}{3}$ ft.

5.57 The coordinates of a moving body are $x = 2 \sin \omega t$, $y = 2 \cos \omega t$. (a) Find the Cartesian equation of the trajectory. (b) Calculate the value of the velocity at any time. (c) Calculate the tangential and normal components of the acceleration at any time. Identify the type of motion described by the above equations.

5.58 If the coordinates of a moving body are $x = at$, $y = b \sin at$, demonstrate that the value of the acceleration is proportional to the distance from the object undergoing this motion and the X-axis. Make a plot of the path.

5.59 A point is moving in the XY-plane in such a manner that $v_x = 4t^3 + 4t$, $v_y = 4t$. If the position of the point is (1, 2) when $t = 0$, find the Cartesian equation of the trajectory.

5.60 A particle is moving in the XY-plane according to the law $a_x = -4 \sin t$, $a_y = 3 \cos t$. If we are given that at $t = 0$, $x = 0$, $y = 3$, $v_x = 4$, $v_y = 0$: Find (a) the equation of the trajectory and (b) calculate the value of the velocity when $t = \pi/4$ s.

5.61 A projectile is shot with a velocity of 600 m s^{-1} at an angle of 60° with the hori-

zontal. Calculate (a) the horizontal range, (b) the maximum height, (c) the velocity and height after 30 s, (d) the velocity and the time when the projectile is 10 km high.

5.62 A bomber plane is flying horizontally at an altitude of 1.2 km with a velocity of 180 km hr^{-1}. (a) How long before the plane is over its target should it drop a bomb? (b) What is the velocity of the bomb when it reaches the ground? (c) What is the bomb's velocity 10 s after it is dropped? (d) What is the bomb's velocity when it is 200 m high and when it strikes the ground? (e) What is the angle of the bomb's velocity as it strikes the ground? (f) What is the horizontal distance covered by the bomb?

5.63 A projectile is shot out at an angle of 35°. It strikes the ground at a horizontal distance of 4 km from the gun. Calculate (a) the initial velocity, (b) the time of the flight, (c) the maximum altitude, (d) the velocity at the point of maximum altitude.

5.64 A machine gun is situated at the top of a cliff at an altitude of 400 ft. It shoots a projectile with a velocity of 786 ft s^{-1} at an angle of 30° above the horizontal. Calculate the range (horizontal distance from the base of the cliff) of the gun. If a car is heading directly for the cliff at a velocity of 60 mi hr^{-1} along a horizontal road, how far away from the cliff should the car be for the gun to begin firing and hit it? Repeat the problem for a firing angle below the horizontal. Repeat the problem for a car moving away from the cliff.

5.65 A gun is placed at the base of a hill whose slope makes an angle ϕ with the horizontal. If the gun is set at an angle α with the horizontal and has a muzzle velocity v_0, find the distance, measured *along the hill*, at which the bullet will fall.

5.66 An airplane is flying horizontally at an altitude h with a velocity v. At the instant the plane is directly over an antiaircraft gun, the gun fires at the plane. Calculate the minimum velocity v_0 and the aiming angle α which the projectile would need in order to hit the plane.

5.67 A machine gun shoots a bullet with a velocity of 650 ft s^{-1}. Determine the angles at which the bullet will hit a target 450 ft away and 18 ft high.

5.68 Find the radius of curvature at the highest point of the path of a projectile fired at an initial angle α with the horizontal.

5.69 A hunter points at a squirrel on a branch of a tree. At the moment he fires his gun, the squirrel drops off the branch. Show that the squirrel should not have dropped if it had wanted to stay alive.

5.70 An airplane is flying horizontally at an altitude of 1 km and a velocity of 200 km hr^{-1}. It drops a bomb which is meant to hit a ship moving in the same direction at a velocity of 20 km hr^{-1}. Prove that the bomb should be dropped when the horizontal distance between the plane and the ship is 730 m. Solve the same problem for the case in which the ship is moving in the opposite direction.

5.71 Prove that for plane motion under a constant acceleration $\boldsymbol{a}$, the following relations hold:

$$v^2 = v_0 + 2\boldsymbol{a} \cdot (\boldsymbol{r} - \boldsymbol{r}_0)$$

and

$$\boldsymbol{r} = \tfrac{1}{2}(\boldsymbol{v} + \boldsymbol{v}_0)t.$$

5.72 A wheel of radius R rolls with constant velocity v_0 along a horizontal plane. Prove that the position of any point on its edge is given by the equations $x = R(\omega t - \sin \omega t)$ and $y = R(1 - \cos \omega t)$, where $\omega = v_0/R$ is the angular velocity of the wheel and t is measured from the instant when the point is initially in contact with the plane. Also find the components of the velocity and the acceleration of the point.

5.73 A wheel of radius R rolls along a horizontal plane. Prove that at each instant the velocity of each point is perpen-

dicular to the line joining the point with the point of contact of the wheel with the plane. If ρ is the distance between these points, prove that the magnitude of the velocity of the moving point is $\omega\rho$. What do you conclude from these results?

5.74 Using the method explained in Section 5.11, prove that

$$d\boldsymbol{u}_\theta/dt = -\boldsymbol{u}_r\, d\theta/dt.$$

5.75 Show that the components of the acceleration along the unit vectors $\boldsymbol{u}_r$ and $\boldsymbol{u}_\theta$ (Fig. 5–26) are

$$a_r = \frac{d^2r}{dt^2} - r\left(\frac{d\theta}{dt}\right)^2, \quad a_\theta = 2\frac{dr}{dt}\frac{d\theta}{dt} + r\frac{d^2\theta}{dt^2}.$$

[*Hint:* Use the expression (5.63) for the velocity and take into account the values of $d\boldsymbol{u}_r/dt$ and $d\boldsymbol{u}_\theta/dt$.]

6
RELATIVE MOTION

6.1 Introduction
6.2 Relative Velocity
6.3 Uniform Relative Translational Motion
6.4 Uniform Relative Rotational Motion
6.5 Motion Relative to the Earth
6.6 The Lorentz Transformation
6.7 Transformation of Velocities
6.8 Consequences of the Lorentz Transformation

6.1 Introduction

In the previous chapter we indicated that motion is a relative concept in that it must always be referred to a particular frame of reference, chosen by the observer. Since different observers may use different frames of reference, it is important to know how observations made by different observers are related. For example, most of the observations made on earth are related to a frame of reference attached to it, and therefore moving with the earth. Astronomers still prefer to refer the motion of a celestial body to the so-called *fixed stars*. In atomic physics the motion of the electrons is determined relative to the nucleus. An experimenter usually chooses a frame of reference in which his data-taking and analysis are most easily accomplished.

The possibility of defining an *absolute system* of reference at rest relative to *empty* space is a matter that has been discussed for centuries by physicists and philosophers. When it was assumed that empty space was "filled" with an imaginary substance called *ether*, having rather contradictory and impossible properties, the absolute system of reference was defined as one at rest relative to the ether. However, once people discarded the artificial and unnecessary idea of an ether, it became impossible to define such an absolute system, because in empty space there are no elements that can serve as reference points. As we shall show in this chapter, the matter has no relevance any more.

6.2 Relative Velocity

Let us consider two objects A and B and an observer O, using as frame of reference the axes XYZ (Fig. 6–1). The velocities of A and B relative to O are

$$\boldsymbol{V}_A = \frac{d\boldsymbol{r}_A}{dt}, \qquad \boldsymbol{V}_B = \frac{d\boldsymbol{r}_B}{dt}. \tag{6.1}$$

The velocities of B relative to A and of A relative to B are defined by

$$\boldsymbol{V}_{BA} = \frac{d\boldsymbol{r}_{BA}}{dt}, \qquad \boldsymbol{V}_{AB} = \frac{d\boldsymbol{r}_{AB}}{dt}, \tag{6.2}$$

where

$$\boldsymbol{r}_{BA} = \overrightarrow{AB} = \boldsymbol{r}_B - \boldsymbol{r}_A, \qquad \boldsymbol{r}_{AB} = \overrightarrow{BA} = \boldsymbol{r}_A - \boldsymbol{r}_B. \tag{6.3}$$

Note that, since $\boldsymbol{r}_{AB} = -\boldsymbol{r}_{BA}$, we also have

$$\boldsymbol{V}_{BA} = -\boldsymbol{V}_{AB}. \tag{6.4}$$

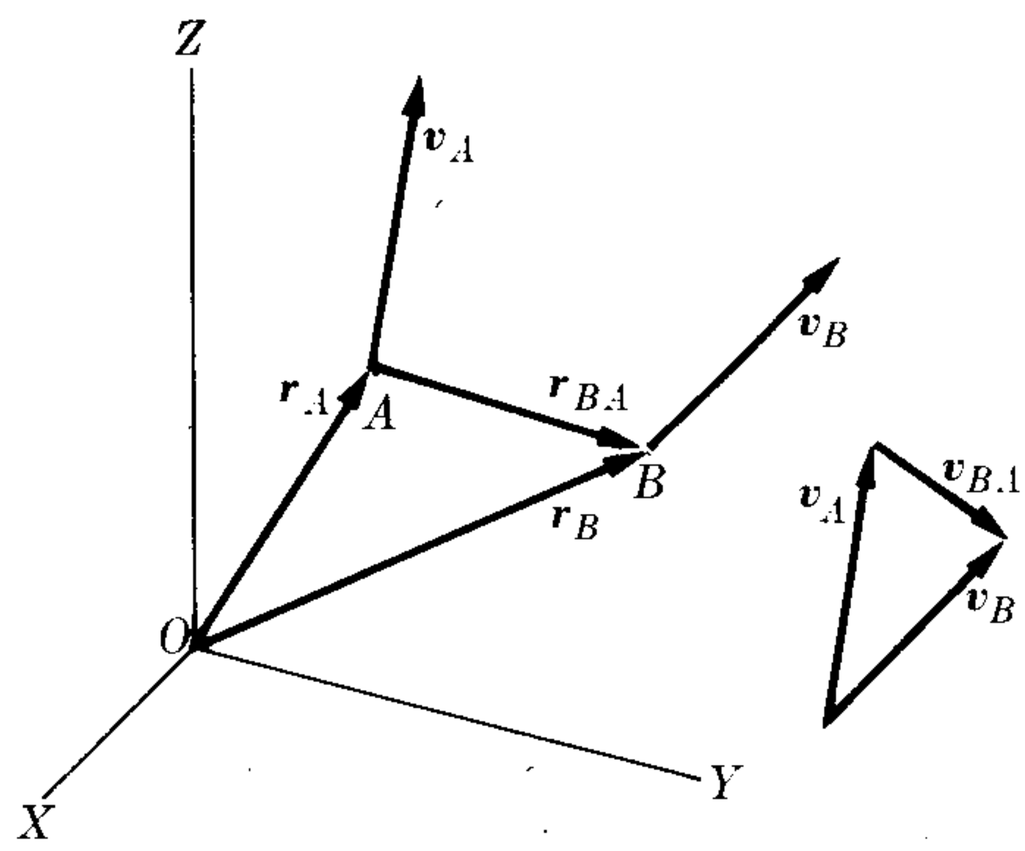

Fig. 6–1. Definition of relative velocity.

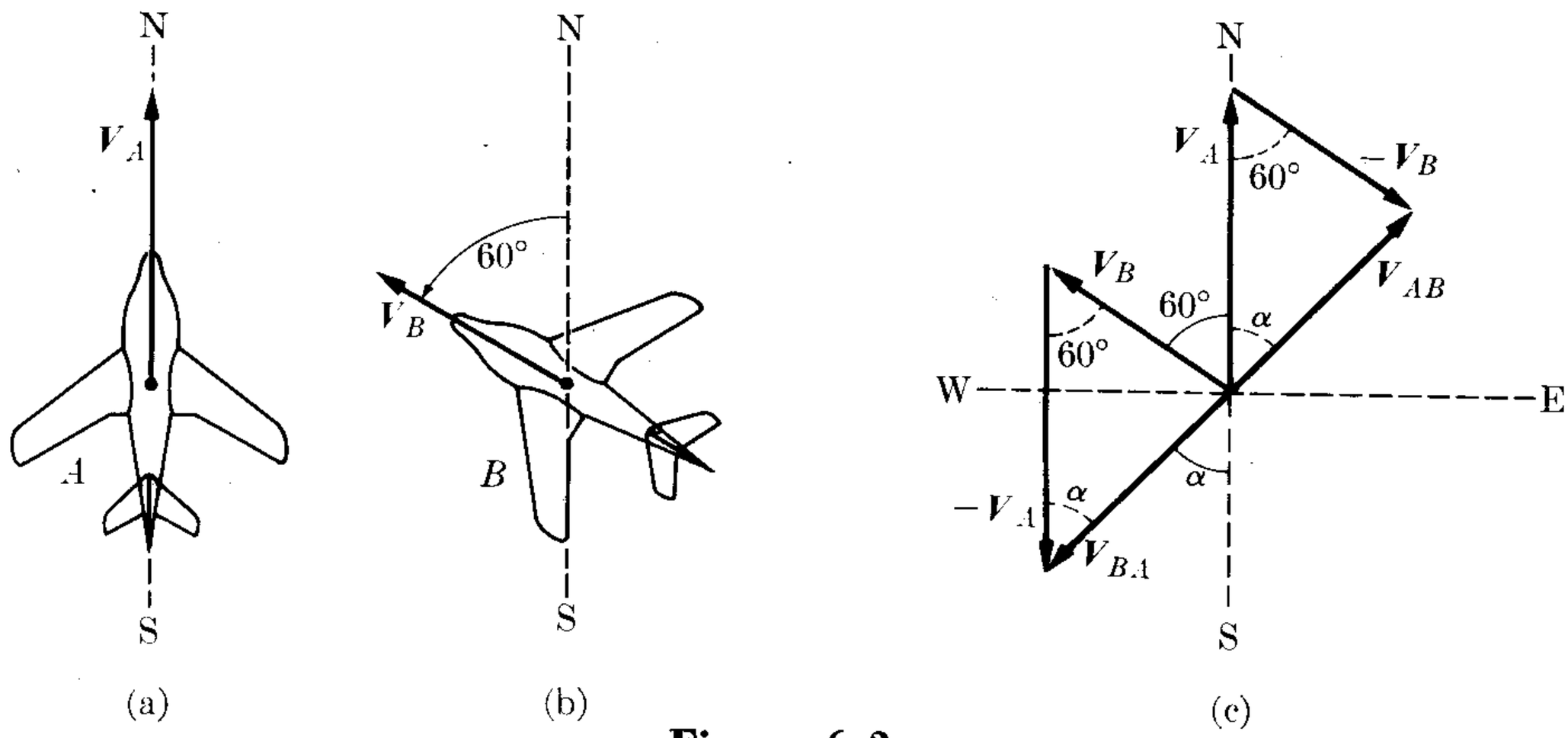

Figure 6–2

In other words, the velocity of B relative to A is equal and opposite to the velocity of A relative to B. Taking the derivative of Eq. (6.3) with respect to time, we obtain

$$\frac{d\boldsymbol{r}_{BA}}{dt} = \frac{d\boldsymbol{r}_B}{dt} - \frac{d\boldsymbol{r}_A}{dt}$$

or, using Eqs. (6.1) and (6.2), we have

$$\boldsymbol{V}_{BA} = \boldsymbol{V}_B - \boldsymbol{V}_A, \qquad \boldsymbol{V}_{AB} = \boldsymbol{V}_A - \boldsymbol{V}_B. \tag{6.5}$$

Therefore, to obtain the relative velocity of two bodies, one subtracts their velocities relative to the observer. Again taking the derivative of Eq. (6.5), we find that

$$\frac{d\boldsymbol{V}_{BA}}{dt} = \frac{d\boldsymbol{V}_B}{dt} - \frac{d\boldsymbol{V}_A}{dt},$$

with a similar expression for $d\boldsymbol{V}_{AB}/dt$. The first term is called the acceleration of B relative to A, and is designated by $\boldsymbol{a}_{BA}$. The other two terms are, respectively, the accelerations of B and A relative to O. Therefore

$$\boldsymbol{a}_{BA} = \boldsymbol{a}_B - \boldsymbol{a}_A \qquad \text{and} \qquad \boldsymbol{a}_{AB} = \boldsymbol{a}_A - \boldsymbol{a}_B. \tag{6.6}$$

EXAMPLE 6.1. An airplane A (Fig. 6–2) flies toward N at 300 mi hr^{-1} relative to the ground. At the same time another plane B flies in the direction N 60° W at 200 mi hr^{-1} relative to the ground. Find the velocity of A relative to B and of B relative to A.

Solution: In Fig. 6–2, the velocities of planes A and B relative to the ground have been represented at the left. On the right we have the velocity of A relative to B, that is, $\boldsymbol{V}_{AB} = \boldsymbol{V}_A - \boldsymbol{V}_B$, and of B relative to A, that is, $\boldsymbol{V}_{BA} = \boldsymbol{V}_B - \boldsymbol{V}_A$. We may note that $\boldsymbol{V}_{AB} = -\boldsymbol{V}_{BA}$, as it should be according to Eq. (6.4).

To compute $\boldsymbol{V}_{AB}$, we use Eq. (3.6), noting that the angle θ between $\boldsymbol{V}_A$ and $\boldsymbol{V}_B$ is 60°. Thus

$$V_{AB} = \sqrt{300^2 + 200^2 - 2 \times 300 \times 200 \times \cos 60^\circ} = 264.6 \text{ mi hr}^{-1}.$$

To obtain the direction of V_{AB}, we use the law of sines, Eq. (3.4),

$$\frac{V_B}{\sin\alpha} = \frac{V_{AB}}{\sin 60^\circ} \qquad \text{or} \qquad \sin\alpha = \frac{V_B \sin 60^\circ}{V_{AB}} = 0.654,$$

giving $\alpha = 40.7^\circ$. Therefore, to a passenger in plane B it seems as if plane A moves at 264.6 mi hr^{-1} in the direction N 40.7° E. The relative velocity V_{BA} has the same magnitude, 264.6 mi hr^{-1}, but the opposite direction, S 40.7° W.

6.3 Uniform Relative Translational Motion

Let us consider two observers O and O' who move, relative to each other, with translational uniform motion. That is, the observers do not rotate relative to each other. Therefore, observer O sees observer O' moving with velocity $\boldsymbol{v}$, while O' sees O moving with velocity $-\boldsymbol{v}$. We are interested in comparing their descriptions of the motion of an object, as, for example, when one observer is on the platform of a railroad station and another is in a passing train moving in a straight line, and both observers are watching the flight of a plane overhead.

We choose, for simplicity, the X- and X'-axes along the line of the relative motion (Fig. 6–3) and the YZ- and $Y'Z'$-axes parallel to each other; the coordinate axes will always remain parallel because of the absence of relative rotation. We shall also assume that at $t = 0$, O and O' are coincident, so that, with $\boldsymbol{v}$ as their constant relative velocity, we may write,

$$\overrightarrow{OO'} = \boldsymbol{v}t$$

and

$$\boldsymbol{v} = \boldsymbol{u}_x v.$$

Consider now a particle at A. From Fig. 6–3, we see that $\overrightarrow{OA} = \overrightarrow{OO'} + \overrightarrow{O'A}$ and since $\overrightarrow{OA} = \boldsymbol{r}$, $\overrightarrow{O'A} = \boldsymbol{r}'$, and $\overrightarrow{OO'} = \boldsymbol{v}t$, the position vectors of A as measured by O and O' are related by

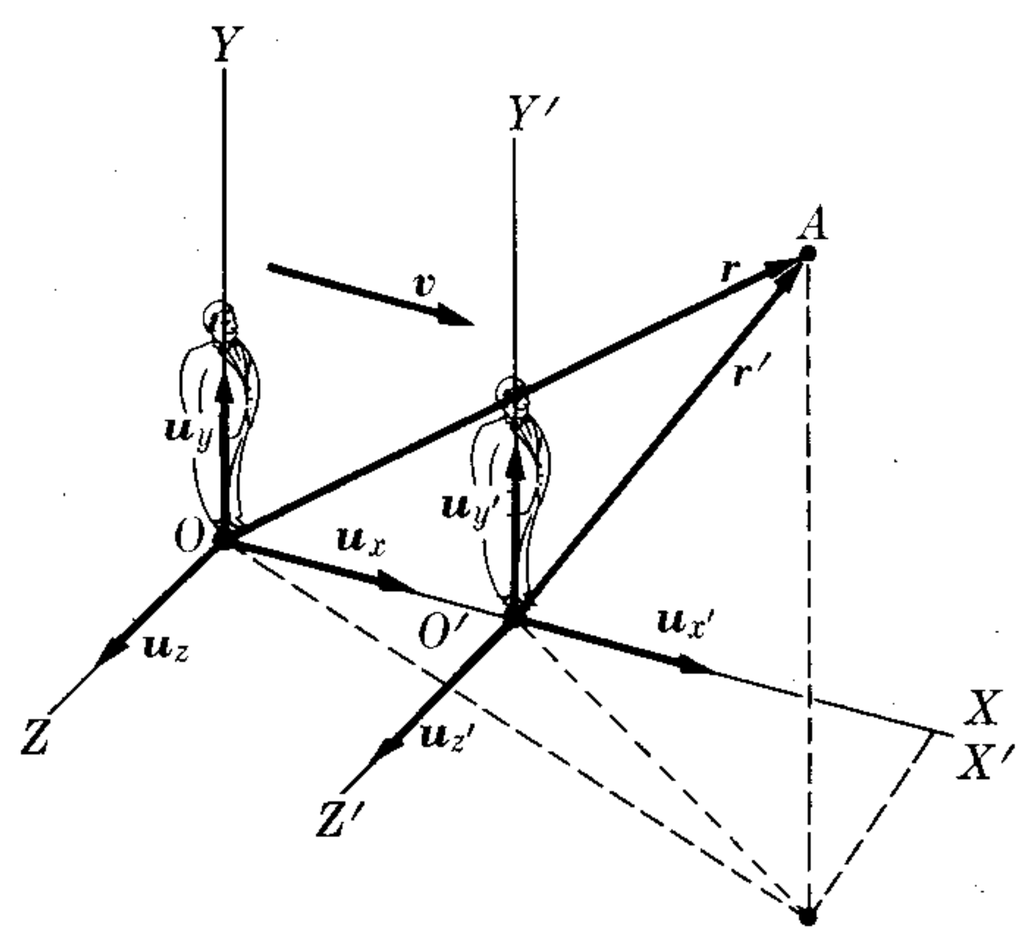

Fig. 6–3. Frames of reference in uniform relative translational motion.

$$\boldsymbol{r}' = \boldsymbol{r} - \boldsymbol{v}t. \tag{6.7}$$

The above vector equation can be separated into its three components, taking into account the fact that $\boldsymbol{v}$ is parallel to OX. Therefore

$$x' = x - vt, \qquad y' = y, \qquad z' = z, \qquad t' = t. \tag{6.8}$$

We have added $t' = t$ to the three space equations to emphasize that we are assuming that the two observers are using the same time; that is, we assume that time measurements are independent of the motion of the observer. This seems very reasonable, but it is only an assumption, which may be disproved by experiment.

The set of equations (6.8) or the single vector equation (6.7), combined with $t' = t$, are called a *Galilean transformation.*

The velocity $\boldsymbol{V}$ of A relative to O is defined by

$$\boldsymbol{V} = \frac{d\boldsymbol{r}}{dt} = \boldsymbol{u}_x \frac{dx}{dt} + \boldsymbol{u}_y \frac{dy}{dt} + \boldsymbol{u}_z \frac{dz}{dt}$$

and the velocity $\boldsymbol{V}'$ of A relative to O' is,

$$\boldsymbol{V}' = \frac{d\boldsymbol{r}'}{dt} = \boldsymbol{u}_{x'} \frac{dx'}{dt} + \boldsymbol{u}_{y'} \frac{dy'}{dt} + \boldsymbol{u}_{z'} \frac{dz'}{dt}.$$

Note that we do not write $d\boldsymbol{r}'/dt'$ because we have assumed that $t = t'$, and hence $d\boldsymbol{r}'/dt'$ is the same as $d\boldsymbol{r}'/dt$. Taking the derivative of Eq. (6.7) relative to time and noting that $\boldsymbol{v}$ is constant, we have

$$\boldsymbol{V}' = \boldsymbol{V} - \boldsymbol{v}, \tag{6.9}$$

or noting that $V_x = dx/dt$, $V'_{x'} = dx'/dt$, etc., we may separate Eq. (6.9) into the three velocity components:

$$V'_{x'} = V_x - v, \qquad V'_{y'} = V_y, \qquad V'_{z'} = V_z. \tag{6.10}$$

These can also be obtained directly by taking the time derivative of Eqs. (6.8). Equations (6.9) or (6.10) give the Galilean rule for comparing the velocity of a body as measured by two observers in relative translational motion. For example, if A moves parallel to the OX-axis, we simply have

$$V' = V - v, \tag{6.11}$$

the other components being zero. But if A moves parallel to the OY-axis, $V_x = V_z = 0$, $V_y = V$, then $V'_{x'} = -v$ and $V'_{y'} = V$, $V'_{z'} = 0$, so that

$$V' = \sqrt{V^2 + v^2}. \tag{6.12}$$

The acceleration of A relative to O and O' is $\boldsymbol{a} = d\boldsymbol{V}/dt$ and $\boldsymbol{a}' = d\boldsymbol{V}'/dt$, respectively. Note again that we use the same t in both cases. From Eq. (6.9), noting that $d\boldsymbol{v}/dt = 0$ because $\boldsymbol{v}$ is constant, we obtain

$$\frac{d\boldsymbol{V}}{dt} = \frac{d\boldsymbol{V}'}{dt} \qquad \text{or} \qquad \boldsymbol{a}' = \boldsymbol{a}, \tag{6.13}$$

which, expressed in rectangular coordinates, is

$$a'_{x'} = a_x, \qquad a'_{y'} = a_y, \qquad \text{and} \qquad a'_{z'} = a_z. \tag{6.14}$$

In other words, both observers measure the same acceleration. That is, *the acceleration of a particle is the same for all observers in uniform relative translational motion.* This result offers us an example of a physical quantity—the acceleration of a particle—that appears to be independent of the motion of an observer; in other words, we have found that *acceleration remains invariant when passing from one*

frame of reference to any other which is in uniform relative translational motion. This is the first time we see a physical quantity remain invariant under transformation. Later on we shall find other physical quantities that behave in the same manner. This result, as we shall see, has a profound influence on the formulation of laws in physics.

EXAMPLE 6.2. The velocity of sound in still air at 25°C (or 77°F) is 358 m s^{-1}. Find the velocity measured by an observer moving with a velocity of 90 km hr^{-1} (a) away from the source, (b) toward the source, (c) perpendicular to the direction of propagation in air, (d) in a direction such that the sound appears to propagate crosswise relative to the moving observer. Assume that the source is at rest relative to the ground.

Solution: Let us use a frame of reference XYZ (Fig. 6–4) fixed on the ground, and thus at rest relative to the air, and a frame $X'Y'Z'$ moving with the observer, with the X- and X'-axes parallel to the velocity of the observer, as in Fig. 6–3. Relative to XYZ, the sound source is at O, the velocity of the observer O' is v = 90 km hr^{-1} = 25 m s^{-1}, and the velocity of sound is V = 358 m s^{-1}. The velocity of sound, relative to $X'Y'Z'$, as recorded by the moving observer O', is V'. Applying Eq. (6.9) or (6.10), we have for case (a) $V' = V - v$ = 333 m s^{-1}. In case (b), we note that O' moves along the negative direction of the X-axis. Thus we now have that $\boldsymbol{v} = -\boldsymbol{u}_x v$, changing Eq. (6.11)

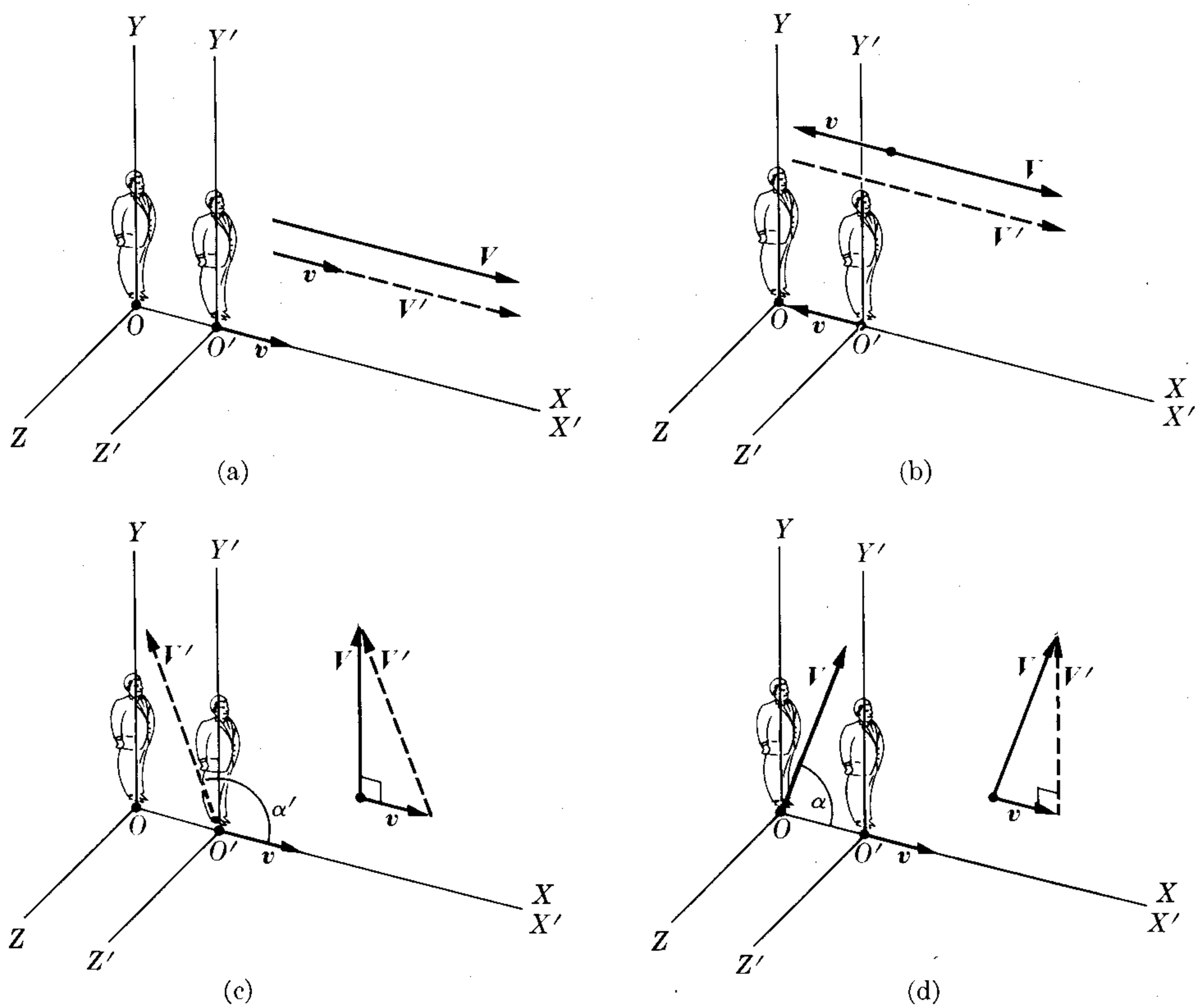

Figure 6–4

into $V' = V + v = 383$ m s^{-1}. For situation (c) we use Eq. (6.12), so that $V' = \sqrt{V^2 + v^2} = 358.9$ m s^{-1}. To the moving observer, the sound appears to propagate in a direction which makes an angle α' with the X'-axis such that

$$\tan \alpha' = \frac{V'_{y'}}{V'_{x'}} = \frac{V}{-v} = -15.32 \qquad \text{or} \qquad \alpha' = 93.7°.$$

Finally, in case (d), the direction of propagation of the sound in air is such that it appears to O' to be moving in the Y'-direction. Thus $V'_{x'} = 0$, $V'_{y'} = V'$, and $V'_{z'} = 0$. Therefore, using Eq. (6.10), we have $0 = V_x - v$ or $V_x = v$ and $V' = V_y$. Thus $V^2 = V_x^2 + V_y^2 = v^2 + V'^2$ or $V' = \sqrt{V^2 - v^2} = 357.1$ m s^{-1}. In this case sound propagates through the still air in a direction making an angle α with the X-axis such that

$$\tan \alpha = \frac{V_y}{V_x} = \frac{V'}{v} = 14.385 \qquad \text{or} \qquad \alpha = 86.0°.$$

6.4 Uniform Relative Rotational Motion

Let us now consider two observers O and O' rotating relative to each other but with no relative translational motion. For simplicity we shall assume that both O and O' are in the same region of space and that each uses a frame of reference attached to itself but with a common origin. For example, observer O, who uses the frame XYZ (Fig. 6–5), notes that the frame $X'Y'Z'$ attached to O' is rotating with angular velocity $\boldsymbol{\omega}$. To O', the situation is just the reverse; O' observes frame XYZ rotating with angular velocity $-\boldsymbol{\omega}$. The position vector $\boldsymbol{r}$ of particle A referred to XYZ is

$$\boldsymbol{r} = \boldsymbol{u}_x x + \boldsymbol{u}_y y + \boldsymbol{u}_z z, \tag{6.15}$$

and therefore the velocity of particle A as measured by O relative to its frame of reference XYZ is

$$\boldsymbol{V} = \frac{d\boldsymbol{r}}{dt} = \boldsymbol{u}_x \frac{dx}{dt} + \boldsymbol{u}_y \frac{dy}{dt} + \boldsymbol{u}_z \frac{dz}{dt}. \tag{6.16}$$

Similarly, the position vector of A referred to $X'Y'Z'$ is

$$\boldsymbol{r} = \boldsymbol{u}_{x'} x' + \boldsymbol{u}_{y'} y' + \boldsymbol{u}_{z'} z', \tag{6.17}$$

where, because the origins are coincident, the vector $\boldsymbol{r}$ is the same as in Eq. (6.15);

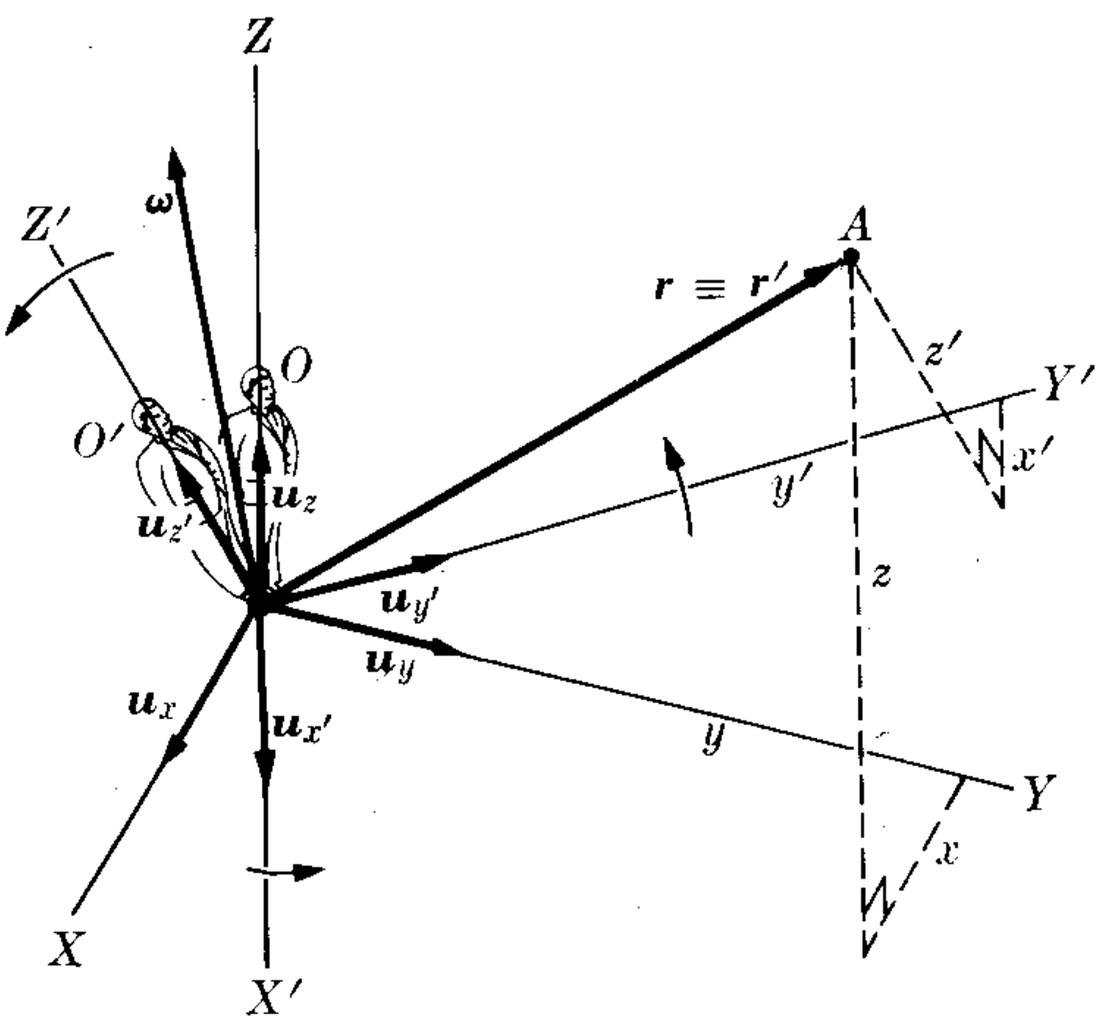

Fig. 6–5. Frames of reference in uniform relative rotational motion.

that is the reason why we have not written $\boldsymbol{r}'$. The velocity of A, as measured by O' relative to its own frame of reference $X'Y'Z'$, is

$$\boldsymbol{V}' = \boldsymbol{u}_{x'}\frac{dx'}{dt} + \boldsymbol{u}_{y'}\frac{dy'}{dt} + \boldsymbol{u}_{z'}\frac{dz'}{dt}. \tag{6.18}$$

In taking the derivative of Eq. (6.17), observer O' has assumed that his frame $X'Y'Z'$ is not rotating, and has therefore considered the unit vectors as constant in direction. However, observer O has the right to say that, to him, the frame $X'Y'Z'$ is rotating and therefore the unit vectors $\boldsymbol{u}_{x'}$, $\boldsymbol{u}_{y'}$, and $\boldsymbol{u}_{z'}$ are not constant in direction, and that in computing the time derivative of Eq. (6.17) one must write

$$\frac{d\boldsymbol{r}}{dt} = \boldsymbol{u}_{x'}\frac{dx'}{dt} + \boldsymbol{u}_{y'}\frac{dy'}{dt} + \boldsymbol{u}_{z'}\frac{dz'}{dt} + \frac{d\boldsymbol{u}_{x'}}{dt}x' + \frac{d\boldsymbol{u}_{y'}}{dt}y' + \frac{d\boldsymbol{u}_{z'}}{dt}z'. \tag{6.19}$$

Now the endpoints of vectors $\boldsymbol{u}_{x'}$, $\boldsymbol{u}_{y'}$, and $\boldsymbol{u}_{z'}$ are (by assumption) in uniform circular motion relative to O, with angular velocity $\boldsymbol{\omega}$. In other words, $d\boldsymbol{u}_{x'}/dt$ is the velocity of a point at unit distance from O and moving with uniform circular motion with angular velocity $\boldsymbol{\omega}$. Therefore, using Eq. (5.48), we have,

$$\frac{d\boldsymbol{u}_{x'}}{dt} = \boldsymbol{\omega} \times \boldsymbol{u}_{x'}, \qquad \frac{d\boldsymbol{u}_{y'}}{dt} = \boldsymbol{\omega} \times \boldsymbol{u}_{y'}, \qquad \frac{d\boldsymbol{u}_{z'}}{dt} = \boldsymbol{\omega} \times \boldsymbol{u}_{z'}.$$

Accordingly, from Eq. (6.19) we may write

$$\begin{aligned}\frac{d\boldsymbol{u}_{x'}}{dt}x' + \frac{d\boldsymbol{u}_{y'}}{dt}y' + \frac{d\boldsymbol{u}_{z'}}{dt}z' &= \boldsymbol{\omega} \times \boldsymbol{u}_{x'}x' + \boldsymbol{\omega} \times \boldsymbol{u}_{y'}y' + \boldsymbol{\omega} \times \boldsymbol{u}_{z'}z' \\ &= \boldsymbol{\omega} \times (\boldsymbol{u}_{x'}x' + \boldsymbol{u}_{y'}y' + \boldsymbol{u}_{z'}z') \\ &= \boldsymbol{\omega} \times \boldsymbol{r}.\end{aligned} \tag{6.20}$$

Introducing this result in Eq. (6.19), and using Eqs. (6.16) and (6.18), we finally get

$$\boldsymbol{V} = \boldsymbol{V}' + \boldsymbol{\omega} \times \boldsymbol{r}. \tag{6.21}$$

This expression gives the relation between the velocities $\boldsymbol{V}$ and $\boldsymbol{V}'$ of A, as recorded by observers O and O' in relative rotational motion.

To obtain the relation between the accelerations, we proceed in a similar way. The acceleration of A, as measured by O relative to XYZ, is

$$\boldsymbol{a} = \frac{d\boldsymbol{V}}{dt} = \boldsymbol{u}_x\frac{dV_x}{dt} + \boldsymbol{u}_y\frac{dV_y}{dt} + \boldsymbol{u}_z\frac{dV_z}{dt}. \tag{6.22}$$

The acceleration of A, as measured by O' relative to $X'Y'Z'$, when he again ignores the rotation, is

$$\boldsymbol{a}' = \boldsymbol{u}_{x'}\frac{dV'_{x'}}{dt} + \boldsymbol{u}_{y'}\frac{dV'_{y'}}{dt} + \boldsymbol{u}_{z'}\frac{dV'_{z'}}{dt}. \tag{6.23}$$

When we differentiate Eq. (6.21) with respect to t, remembering that we are assuming that $\boldsymbol{\omega}$ is constant, we obtain

$$\boldsymbol{a} = \frac{d\boldsymbol{V}}{dt} = \frac{d\boldsymbol{V}'}{dt} + \boldsymbol{\omega} \times \frac{d\boldsymbol{r}}{dt}. \tag{6.24}$$

Now, since $\boldsymbol{V}' = \boldsymbol{u}_{x'}V'_{x'} + \boldsymbol{u}_{y'}V'_{y'} + \boldsymbol{u}_{z'}V'_{z'}$, we obtain by differentiation

$$\frac{d\boldsymbol{V}'}{dt} = \boldsymbol{u}_{x'}\frac{dV'_{x'}}{dt} + \boldsymbol{u}_{y'}\frac{dV'_{y'}}{dt} + \boldsymbol{u}_{z'}\frac{dV'_{z'}}{dt}$$
$$+ \frac{d\boldsymbol{u}_{x'}}{dt}V'_{x'} + \frac{d\boldsymbol{u}_{y'}}{dt}V'_{y'} + \frac{d\boldsymbol{u}_{z'}}{dt}V'_{z'}.$$

The first three terms are just $\boldsymbol{a}'$, as given by Eq. (6.23), and the last three, by a procedure identical to that used to derive Eq. (6.20), are $\boldsymbol{\omega} \times \boldsymbol{V}'$. That is, by substituting the appropriate quantities into Eq. (6.20), we have

$$\boldsymbol{\omega} \times \boldsymbol{u}_{x'}V'_{x'} + \boldsymbol{\omega} \times \boldsymbol{u}_{y'}V'_{y'} + \boldsymbol{\omega} \times \boldsymbol{u}_{z'}V'_{z'}$$
$$= \boldsymbol{\omega} \times (\boldsymbol{u}_{x'}V'_{x'} + \boldsymbol{u}_{y'}V'_{y'} + \boldsymbol{u}_{z'}V'_{z'}) = \boldsymbol{\omega} \times \boldsymbol{V}'.$$

Therefore $d\boldsymbol{V}'/dt = \boldsymbol{a}' + \boldsymbol{\omega} \times \boldsymbol{V}'$. Also from Eqs. (6.16) and (6.21), $d\boldsymbol{r}/dt = \boldsymbol{V} = \boldsymbol{V}' + \boldsymbol{\omega} \times \boldsymbol{r}$, so that

$$\boldsymbol{\omega} \times \frac{d\boldsymbol{r}}{dt} = \boldsymbol{\omega} \times (\boldsymbol{V}' + \boldsymbol{\omega} \times \boldsymbol{r}) = \boldsymbol{\omega} \times \boldsymbol{V}' + \boldsymbol{\omega} \times (\boldsymbol{\omega} \times \boldsymbol{r}).$$

Substituting both results in Eq. (6.24), we finally obtain

$$\boldsymbol{a} = \boldsymbol{a}' + 2\boldsymbol{\omega} \times \boldsymbol{V}' + \boldsymbol{\omega} \times (\boldsymbol{\omega} \times \boldsymbol{r}). \tag{6.25}$$

This equation gives the relation between the accelerations $\boldsymbol{a}$ and $\boldsymbol{a}'$ of A as recorded by observers O and O' in uniform relative rotational motion. The second term, $2\boldsymbol{\omega} \times \boldsymbol{V}'$, is called the *Coriolis acceleration.* The third term is similar to Eq. (5.59) and corresponds to a *centripetal acceleration.* Both the Coriolis and centripetal accelerations are the result of the relative rotational motion of the observers. In the next section we shall illustrate the use of these relations.

6.5 Motion Relative to the Earth

One of the most interesting applications of Eq. (6.25) is the study of a body's motion relative to the earth. As indicated in Example 5.10, the angular velocity of the earth is $\omega = 7.292 \times 10^{-5}$ rad s^{-1}. Its direction is that of the axis of rotation of the earth. Consider a point A on the earth's surface (Fig. 6–6). Let us call $\boldsymbol{g}_0$ the acceleration of gravity as measured by a nonrotating observer at A. Then $\boldsymbol{g}_0$ corresponds to $\boldsymbol{a}$ in Eq. (6.25). Solving Eq. (6.25) for $\boldsymbol{a}'$, we obtain the acceleration measured by an observer rotating with the earth:

$$\boldsymbol{a}' = \boldsymbol{g}_0 - 2\boldsymbol{\omega} \times \boldsymbol{V}' - \boldsymbol{\omega} \times (\boldsymbol{\omega} \times \boldsymbol{r}). \tag{6.26}$$

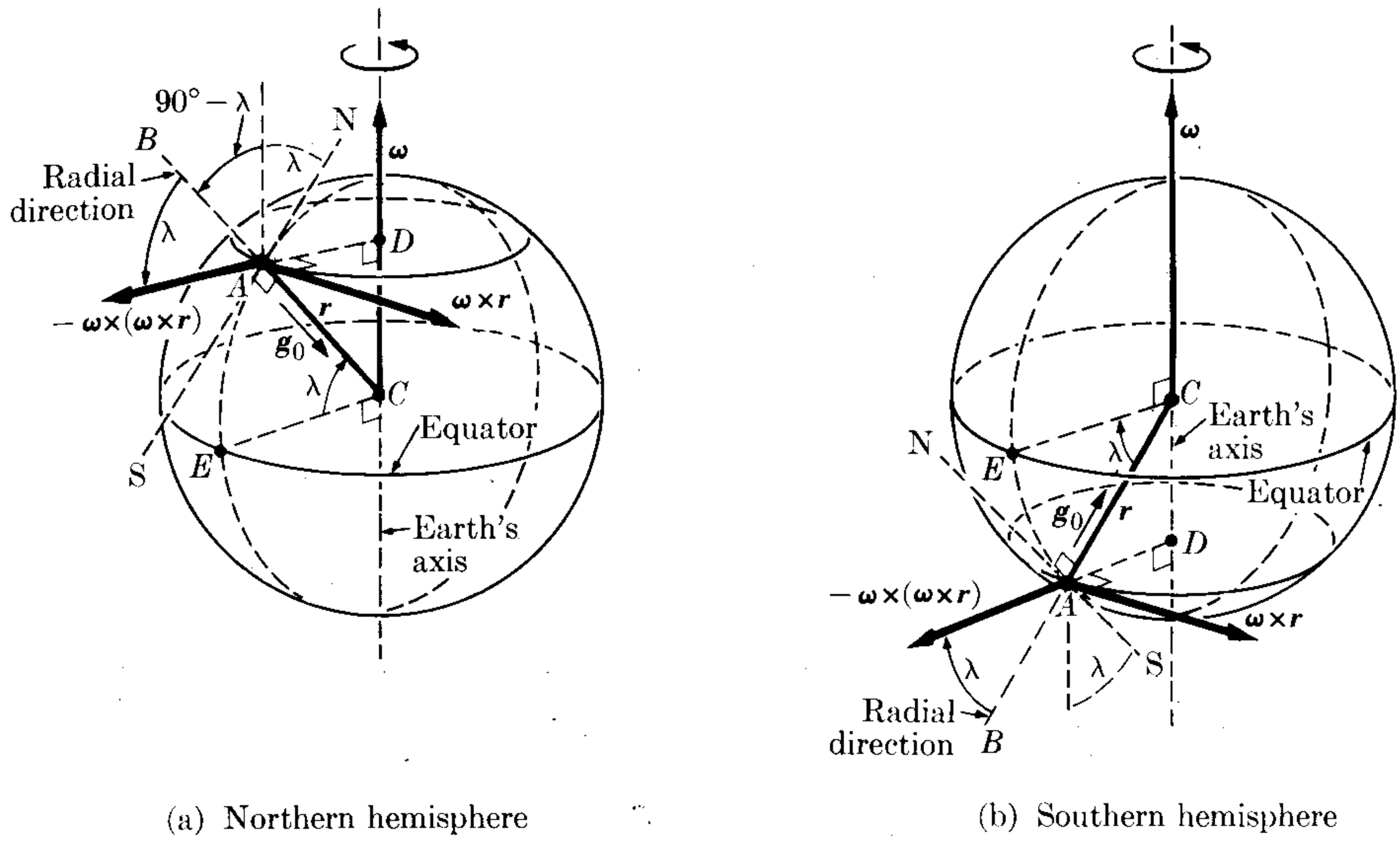

Fig. 6–6. Centrifugal acceleration due to earth's rotation.

We shall first consider the case of a body initially at rest, or moving very slowly, so that the Coriolis term $-2\boldsymbol{\omega} \times \boldsymbol{V}'$ is zero or negligible when compared with the last term $-\boldsymbol{\omega} \times (\boldsymbol{\omega} \times \boldsymbol{r})$. The acceleration $\boldsymbol{a}'$ measured in this case is called the *effective acceleration* of gravity, and is designated by $\boldsymbol{g}$. Thus

$$\boldsymbol{g} = \boldsymbol{g}_0 - \boldsymbol{\omega} \times (\boldsymbol{\omega} \times \boldsymbol{r}). \tag{6.27}$$

This is the acceleration measured with a pendulum, as will be discussed in Chapter 12. Assuming that the earth is spherical (actually it departs slightly from this shape) and that there are no local anomalies, we may consider that $\boldsymbol{g}_0$ is pointing toward the center of the earth along the radial direction. Because the second term in Eq. (6.27), the direction of $\boldsymbol{g}$, called the *vertical*, deviates slightly from the radial direction; it is determined by a plumb line. Liquids always rest in equilibrium with their surface perpendicular to $\boldsymbol{g}$. However, for practical purposes, and in the absence of local disturbances, the vertical may be assumed to coincide with the radial direction.

Let us now analyze in more detail the last term in Eq. (6.27); that is, $-\boldsymbol{\omega} \times (\boldsymbol{\omega} \times \boldsymbol{r})$. This is called the *centrifugal acceleration* because, due to its reversed or negative sign, it points in the outward direction DA, as can be seen in Fig. 6–6. The angle λ that $r = CA$ makes with the equator is the latitude. Therefore the vector $\boldsymbol{\omega}$ makes an angle $90° - \lambda$ with CA in the northern hemisphere and $90° + \lambda$ in the southern hemisphere. The magnitude of $\boldsymbol{\omega} \times \boldsymbol{r}$ is then

$$\omega r \sin (90° \pm \lambda) = \omega r \cos \lambda,$$

and the direction of $\boldsymbol{\omega} \times \boldsymbol{r}$, being perpendicular to $\boldsymbol{\omega}$, is parallel to the equator.

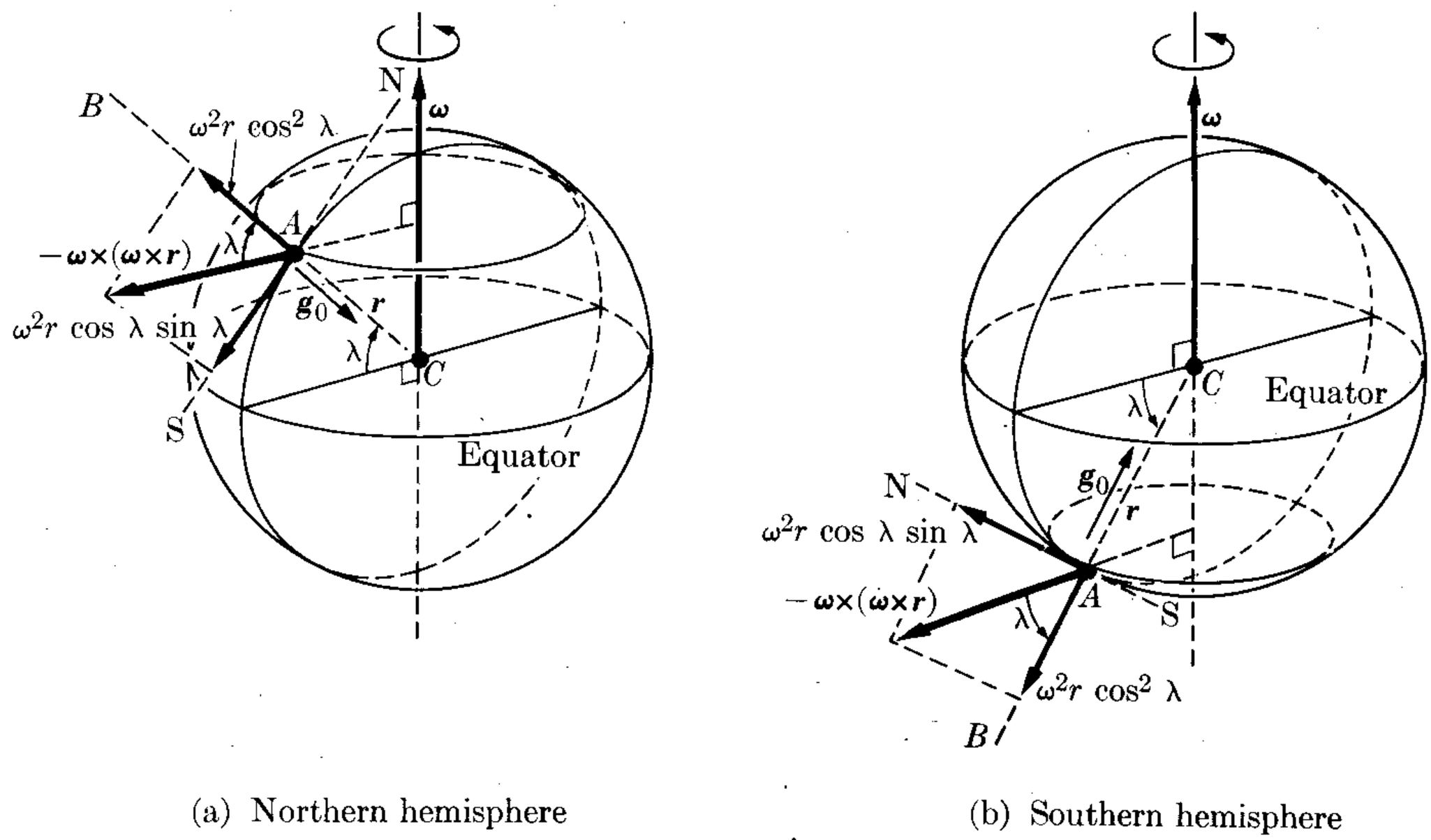

Fig. 6–7. Radial and horizontal components of the centrifugal acceleration.

Remembering Example 5.11, we find that the magnitude of the centrifugal acceleration $-\boldsymbol{\omega} \times (\boldsymbol{\omega} \times \boldsymbol{r})$ is

$$|-\boldsymbol{\omega} \times (\boldsymbol{\omega} \times \boldsymbol{r})| = \omega^2 r \cos\lambda = 3.34 \times 10^{-2} \cos\lambda \text{ m s}^{-2}, \quad (6.28)$$

where $r = 6.35 \times 10^6$ m, which is the radius of the earth. This acceleration decreases from the equator to the poles, but is always very small when compared with the acceleration of gravity $g_0 = 9.80$ m s^{-2}. Its maximum value, at the equator, is about 0.3% of g_0 (see Example 5.11).

We shall now find the components of $-\boldsymbol{\omega} \times (\boldsymbol{\omega} \times \boldsymbol{r})$ along the radial direction AB and along the north-south (NS) line at A. In Fig. 6–7, as in Fig. 6–6, the line AB, which is the extension of CA, is the radial direction. The vector $\boldsymbol{\omega}$ obviously makes an angle λ with NS. As indicated before, the acceleration of gravity $\boldsymbol{g}_0$ points downward along AB. The centrifugal acceleration $-\boldsymbol{\omega} \times (\boldsymbol{\omega} \times \boldsymbol{r})$ is at an angle λ with AB; its component along AB is therefore obtained by multiplying its magnitude, given by Eq. (6.28), by $\cos\lambda$. That is,

$$|-\boldsymbol{\omega} \times (\boldsymbol{\omega} \times \boldsymbol{r})| \cos\lambda = \omega^2 r \cos^2\lambda.$$

The component of the centrifugal acceleration along the line NS is pointing south in the Northern hemisphere (and north in the Southern hemisphere), and is obtained by multiplying its magnitude by $\sin\lambda$, resulting in

$$|-\boldsymbol{\omega} \times (\boldsymbol{\omega} \times \boldsymbol{r})| \sin\lambda = \omega^2 r \cos\lambda \sin\lambda.$$

The two components are illustrated in Fig. 6–7. According to the definition of $\boldsymbol{g}$ given by Eq. (6.27), the components of $\boldsymbol{g}$ along the radial and horizontal directions

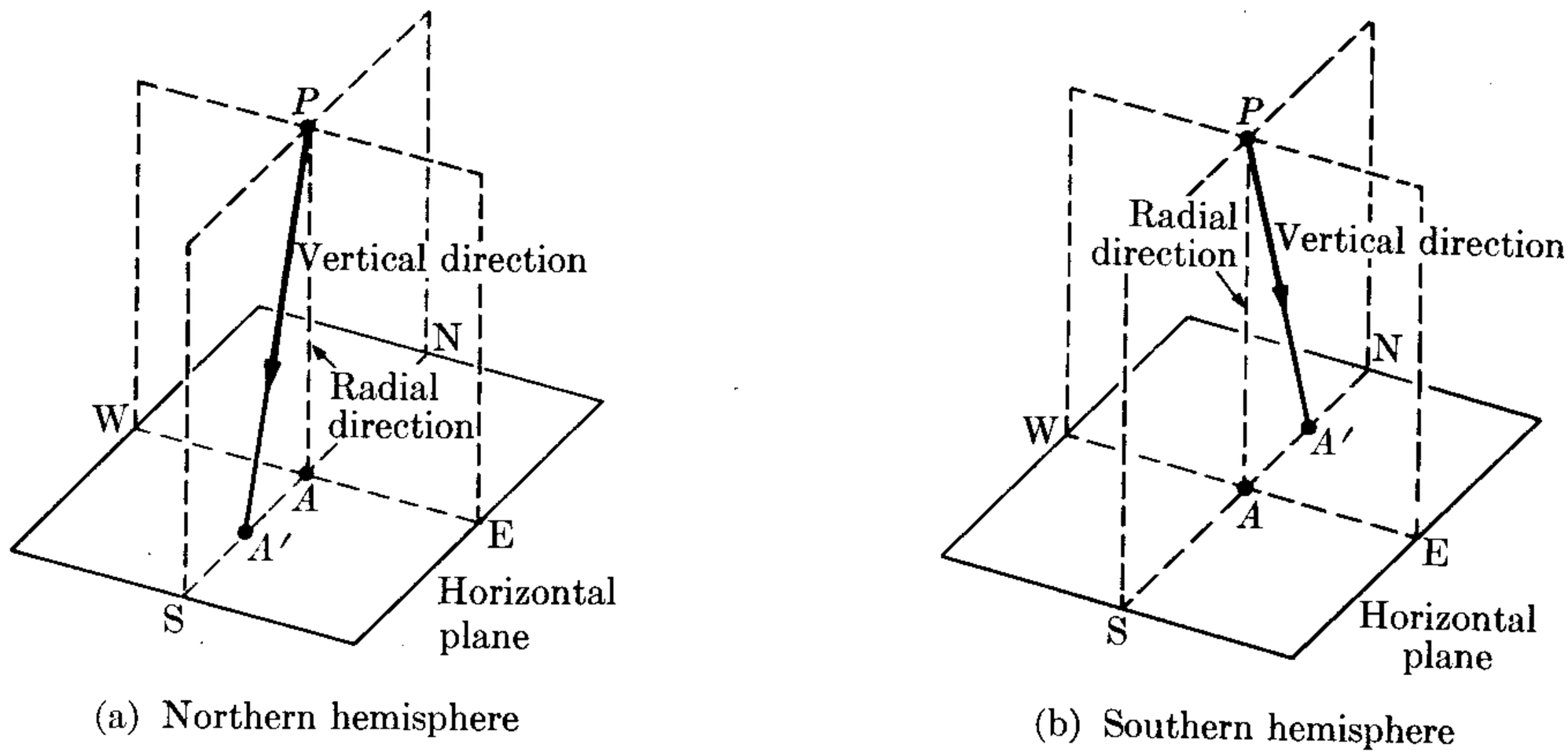

Fig. 6–9. Deviation of the direction of a freely falling body due to centrifugal acceleration: southward (northward) in the Northern (Southern) hemisphere.

pointing east, and the falling body will be deviated in that direction, reaching the ground at A'', slightly to the east of A. Combining this Coriolis effect with the centrifugal effect, the body will fall on a point southeast of A in the Northern hemisphere and northeast of A in the Southern hemisphere. This effect, which is negligible in most cases, must be carefully taken into account both in high-altitude bombing and in intercontinental ballistic missiles. Coriolis acceleration also seriously affects the paths of rockets and of satellites, due to their great velocities.

In the case of a body moving in the horizontal plane, the vector $-2\boldsymbol{\omega} \times \boldsymbol{V}'$, perpendicular to $\boldsymbol{\omega}$ and $\boldsymbol{V}'$, makes an angle equal to $\pi/2 - \lambda$ with the horizontal plane. It has a horizontal component $\boldsymbol{a}_H$ and a vertical component $\boldsymbol{a}_V$ (Fig. 6–11).

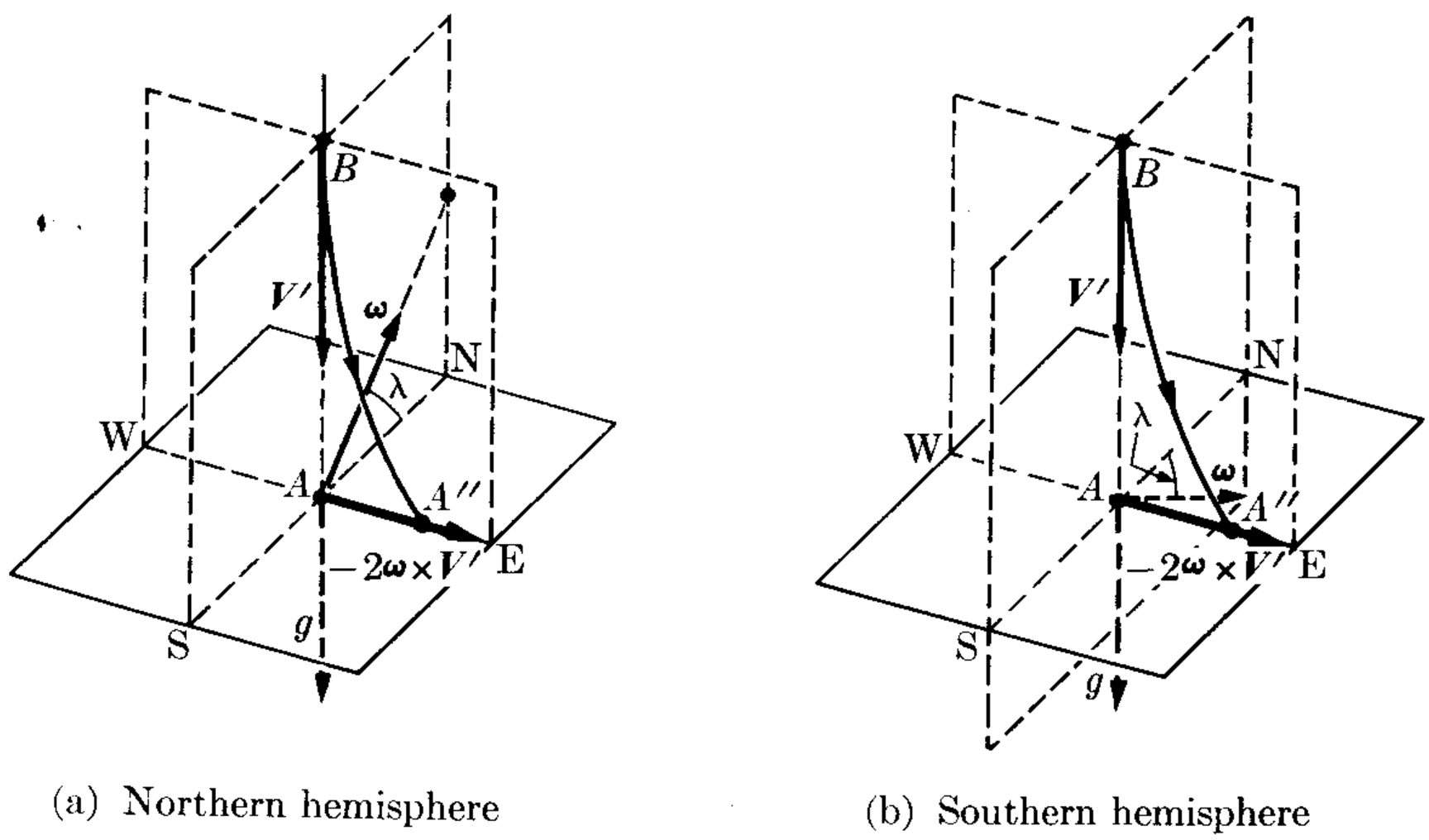

Fig. 6–10. Deviation to the east in the Northern (Southern) hemisphere of a falling body due to Coriolis acceleration.

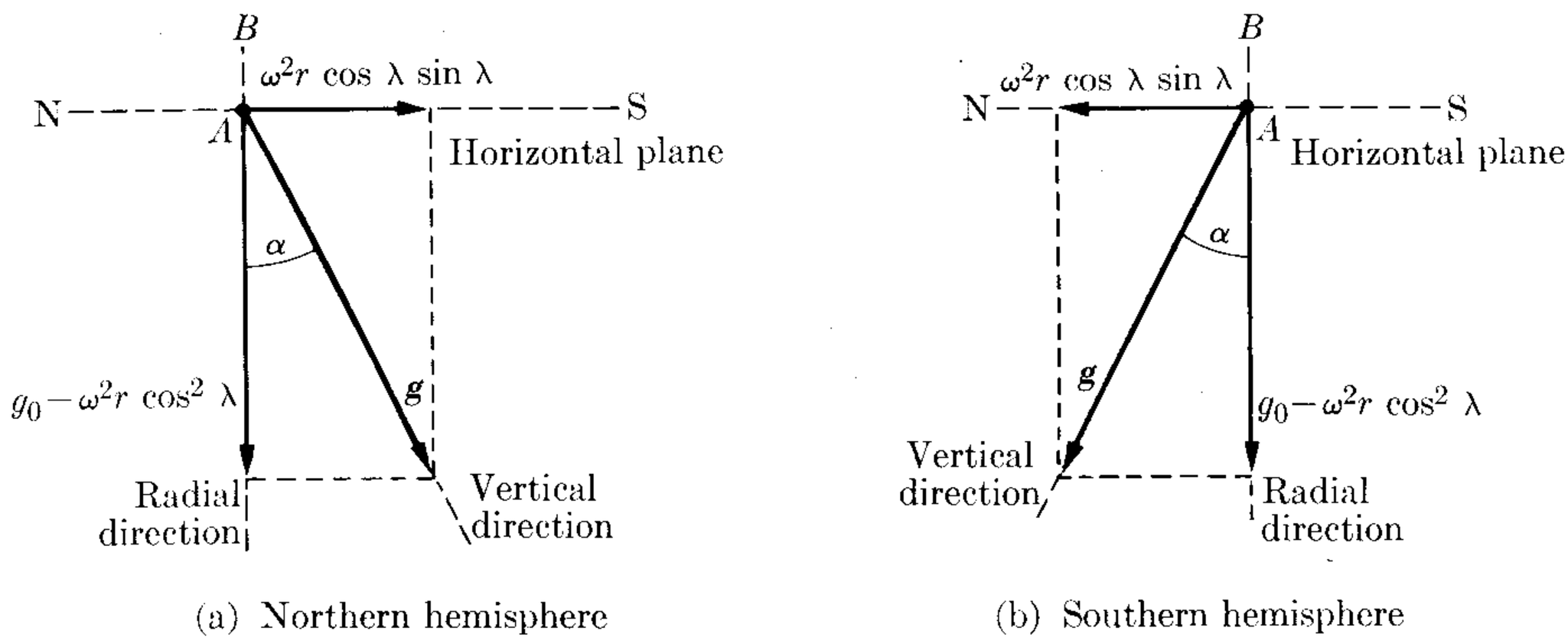

Fig. 6–8. Definition of vertical direction and effective acceleration of free fall.

are as shown in Fig. 6–8. Because of the smallness of the centrifugal term, the angle α is very small and the magnitude of g does not differ appreciably from its component along the radial direction AB. Thus we may write, as a good approximation, that

$$g = g_0 - \omega^2 r \cos^2 \lambda. \tag{6.29}$$

Although the last term is very small, it accounts for the observed increase in the value of the acceleration of gravity with latitude, as reflected in Table 6–1.

The component of the centrifugal acceleration along the NS-direction tends, in the Northern hemisphere, to displace the body slightly toward the south from the radial direction AB and toward the north in the Southern hemisphere. Therefore the path of a falling body will be deviated, as illustrated in Fig. 6–9. The body will thus land at A' instead of landing at A, as would happen if there were no rotation. Because of the small value of α, this deviation is negligible.

Let us consider next the Coriolis term, $-2\boldsymbol{\omega} \times \boldsymbol{V}'$. In the case of a falling body, the velocity $\boldsymbol{V}'$ is essentially pointing downward along the vertical AB (Fig. 6–10) and $\boldsymbol{\omega} \times \boldsymbol{V}'$ points toward the west. Therefore the Coriolis term $-2\boldsymbol{\omega} \times \boldsymbol{V}'$ is

TABLE 6–1 Values of the Acceleration of Gravity, Expressed in m s^{-2}

Location	Latitude	Gravity
North pole	90° 0′	9.8321
Anchorage	61° 10′	9.8218
Greenwich	51° 29′	9.8119
Paris	48° 50′	9.8094
Washington	38° 53′	9.8011
Key West	24° 34′	9.7897
Panama	8° 55′	9.7822
Equator	0° 0′	9.7799

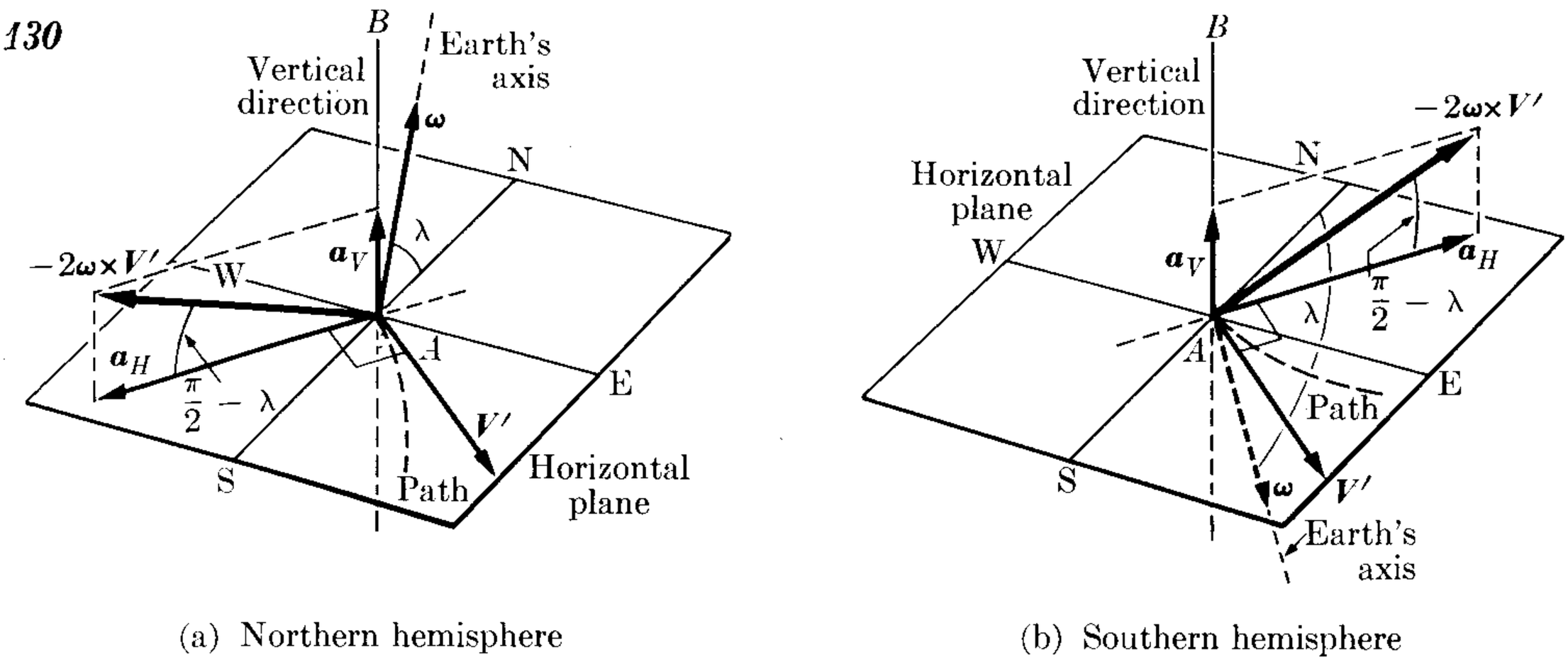

Fig. 6–11. Coriolis acceleration. When a body moves in a horizontal plane, the horizontal component of the Coriolis acceleration points to the right (left) of the direction of motion in the Northern (Southern) hemisphere. Here $\boldsymbol{V}'$ is in the horizontal plane, $\boldsymbol{\omega}$ is in the plane defined by AB and NS, and $\boldsymbol{a}_H$ is perpendicular to $\boldsymbol{V}'$.

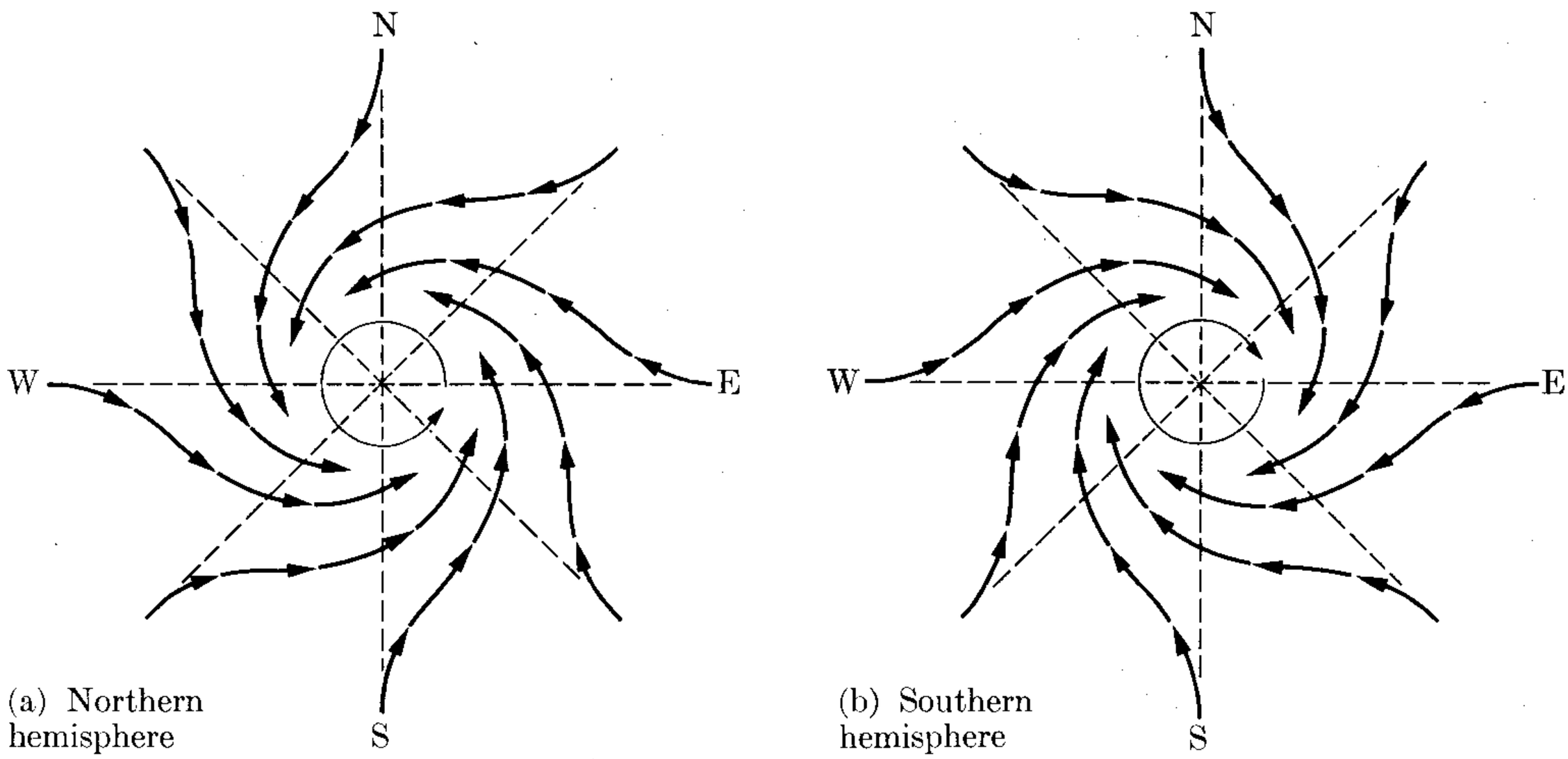

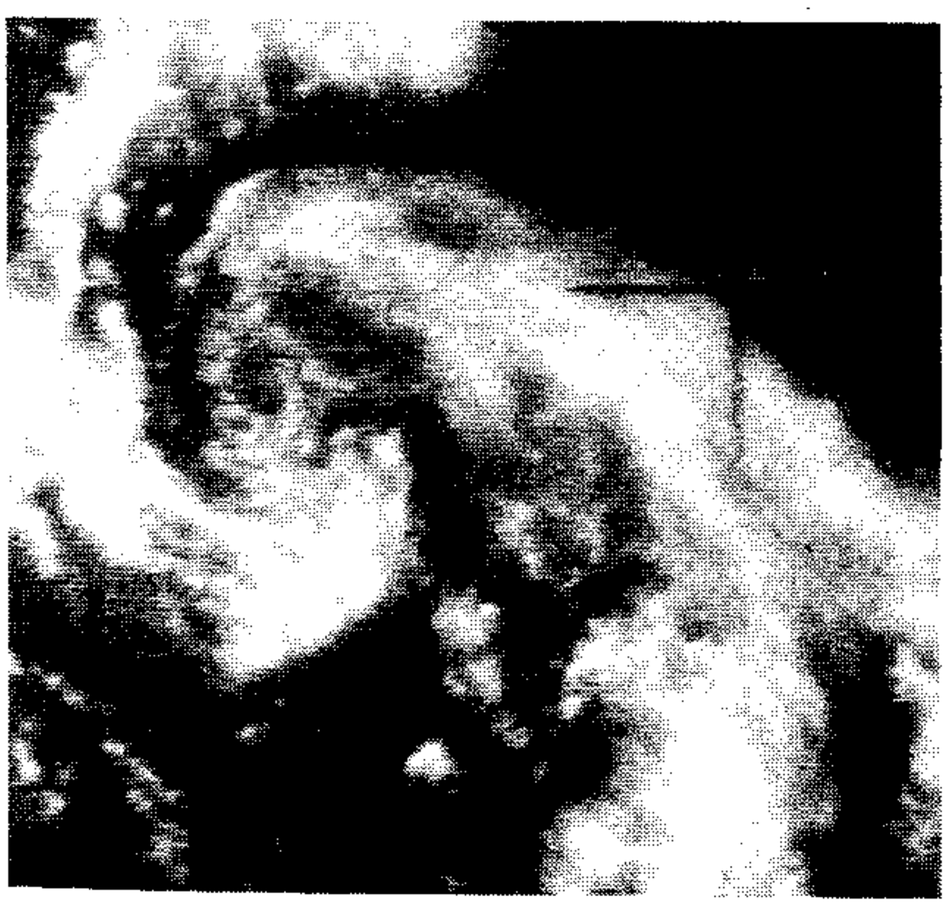

(c)

Fig. 6–12. Counterclockwise (clockwise) whirling of wind in the Northern (Southern) hemisphere resulting from a low pressure center combined with Coriolis acceleration. Part (c) shows a low-pressure disturbance photographed by a Tiros satellite. (Photograph courtesy of NASA/Goddard Space Center.)

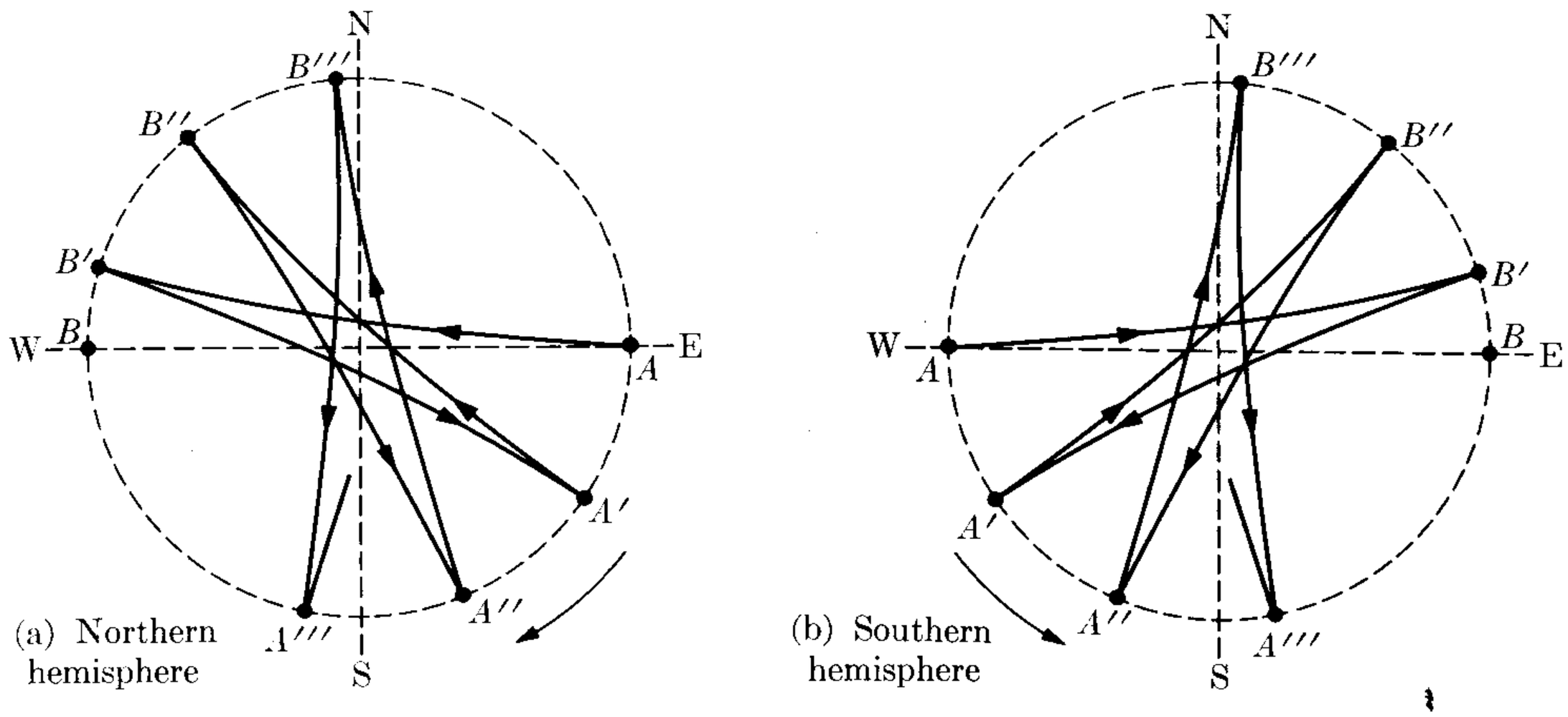

Fig. 6–13. Rotation of plane of oscillation of pendulum as a result of Coriolis acceleration. (Rotation in the Southern hemisphere is in the opposite direction to that in Northern.)

The horizontal component $\boldsymbol{a}_H$ tends to make the path deviate from a straight line, to the right in the Northern hemisphere and to the left in the Southern hemisphere. The component $\boldsymbol{a}_H$ decreases as one moves from the poles toward the equator, where it is zero. Thus at the equator the Coriolis acceleration produces no horizontal effect on the horizontal motion. The vertical effect is small compared with the acceleration of gravity, and in most instances may be neglected.

The horizontal effect may be seen in two common phenomena. One is the whirling of wind in a hurricane. If a low-pressure center develops in the atmosphere, the wind will flow radially toward the center (Fig. 6–12). However, the Coriolis acceleration deviates the air molecules toward the right of their paths in the northern latitudes, resulting in a counterclockwise or whirling motion.* In the Southern hemisphere the rotation is clockwise.

As a second example, let us consider the oscillations of a pendulum. When the amplitude of the oscillations is small, we can assume that the motion of the bob is along a horizontal path. If the pendulum were initially set to oscillate in the east-west direction and were released at A (see Fig. 6–13), it would continue oscillating between A and B if the earth were not rotating. But because of the Coriolis acceleration due to the earth's rotation, the path of the pendulum is deflected continuously to the right in the Northern hemisphere and to the left in the Southern hemisphere. Therefore, at the end of the first oscillation, it reaches B' instead of B. On its return, it goes to A' and not to A. Therefore, in successive complete oscillations, it arrives at A'', A''', etc. In other words, the plane of oscillation of the pendulum rotates clockwise in the Northern hemisphere and counterclockwise in

* The pressure and temperature of the air also have a profound effect on its motion. This effect leads to a phenomenon which is too complicated to be adequately described here. The end result is the cyclonic motion illustrated in Fig. 6–12(c).

the Southern hemisphere. We leave to the student the verification of the fact that the angle through which the plane of oscillation rotates each hour is $15° \sin \lambda$. The effect has been much exaggerated in Fig. 6–13; it is maximum at the poles and zero at the equator.

This effect was spectacularly demonstrated by the French physicist Jean Leon Foucault, when in 1851, from the dome of Les Invalides, in Paris, he hung a pendulum 67 m long. During each oscillation, the pendulum's bob dropped sand on a circle, experimentally demonstrating that its plane of oscillation rotated at the rate of 11° 15′ each hour. There is a Foucault pendulum in the lobby of the Smithsonian Institution in Washington, D.C., as well as in the lobby of the United Nations building in New York. Foucault's experiment is an effective proof of the rotation of the earth. Even if the earth had always been covered by clouds, this experiment would have told physicists that the earth was rotating.

EXAMPLE 6.3. Compute the deviation of a falling body due to the Coriolis acceleration. Compare it with the deviation due to the centrifugal term.

Solution: From Fig. 6–10 we see that the velocity $\boldsymbol{V}'$ of a falling body makes an angle $90° + \lambda$ with $\boldsymbol{\omega}$. Thus the magnitude of the Coriolis acceleration $-2\boldsymbol{\omega} \times \boldsymbol{V}'$ is

$$2\omega V' \sin (90° + \lambda) \qquad \text{or} \qquad 2\omega V' \cos \lambda.$$

This is the acceleration d^2x/dt^2 of the falling body with the easterly direction taken as the X-axis. Therefore

$$\frac{d^2x}{dt^2} = 2\omega V' \cos \lambda.$$

For V' we use, as a good approximation, the free-fall value obtained in Chapter 5. That is, $V' = gt$, and

$$\frac{d^2x}{dt^2} = 2\omega gt \cos \lambda.$$

Integrating, and assuming that the body starts falling from rest ($dx/dt = 0$ for $t = 0$), we have

$$\frac{dx}{dt} = \omega g t^2 \cos \lambda.$$

Again integrating and considering that at $t = 0$ the falling body is above A and therefore has $x = 0$, we get

$$x = \tfrac{1}{3}\omega g t^3 \cos \lambda,$$

which gives the eastward displacement in terms of the time of fall. If the body is dropped from the height h we may again write its value for free fall, $h = \frac{1}{2}gt^2$, so that

$$x = \tfrac{1}{3}\omega \left(\frac{8h^3}{g}\right)^{1/2} \cos \lambda = 1.53 \times 10^{-5} h^{3/2} \cos \lambda.$$

For example, for a body falling from a height of 100 m we have $x = 1.53 \times 10^{-2} \cos \lambda$ m, and thus it is a relatively small amount when compared with the distance fallen.

The southward acceleration due to the centrifugal term is $\omega^2 r^2 \cos \lambda \sin \lambda = 3.34 \times 10^{-2} \cos \lambda \sin \lambda$, and the amount of deflection, using $h = \frac{1}{2}gt^2$, is

$$y = \tfrac{1}{2}(\omega^2 r \cos \lambda \sin \lambda)t^2 = \omega^2 r\,(h/g) \cos \lambda \sin \lambda = 0.342h \cos \lambda \sin \lambda \text{ m}.$$

6.6 The Lorentz Transformation

At the end of the nineteenth century, when it was still assumed that space, empty of matter, was filled with "ether," there was a great discussion as to how bodies moved through that ether and how this motion would affect the velocity of light as measured on the earth. Physicists in earlier days had assumed that vibrations of this hypothetical ether were related to light in the same way that vibrations in air are related to sound. Assuming the ether stationary, we find that light moves relative to the ether with a velocity of $c = 2.9974 \times 10^8$ m s^{-1}. If the earth moves through the ether without disturbing it, then the velocity of light relative to the earth should depend on the direction of light propagation. For example, it should be $c - v$ for a ray of light propagating in the same direction the earth is moving and $c + v$ for the opposite direction. However, if the light's path as observed from the earth is perpendicular to the earth's motion, its velocity relative to the earth would be $\sqrt{c^2 - v^2}$. (Remember Example 6.2d for a similar case pertaining to sound.)

In 1881 the American physicists Michelson and Morley started a memorable series of experiments for measuring the velocity of light in different directions relative to the earth. To their great surprise they found that the velocity of light was the same in all directions.* However, Galileo's transformation indicates that no body may have the same velocity relative to two observers in uniform relative motion, and that relative velocity depends on the direction of motion of the observer. This is emphasized particularly by Eqs. (6.9) and (6.10). One possible alternative explanation would be that the earth drags the ether with it, as it drags the atmosphere, and therefore close to the earth's surface the ether should be at rest relative to the earth. This is a rather improbable explanation, since the ether drag would manifest itself in other phenomena connected with light propagation. Such phenomena have never been observed. For the above reasons, the idea of an ether has been discarded by physicists.

The puzzle of the Michelson and Morley experiment was settled in 1905 when Einstein stated his principle of relativity, which will be discussed in more detail in Section 11.3. This principle states that

> *all laws of nature must be the same (i.e., must remain invariant) for all observers in uniform relative translational motion.*

---

* For a critical review of the experiments performed to determine the velocity of light relative to the earth in different directions, consult R. S. Shankland, *et al.*, *Reviews of Modern Physics* **27**, 167 (1955).

Einstein assumed that the velocity of light is a physical invariant, having the same value for all observers. As we shall see later, this is required when we apply the principle of relativity to the laws of electromagnetism. Under this assumption, Galileo's transformation cannot be the correct one. In particular, the fourth equation in (6.8), $t' = t$, can no longer be correct. Since velocity is distance divided by time, we may have to adjust the time as well as the distance if the quotient of the two is to remain the same for observers in relative motion as it does in the case of the velocity of light. In other words, the time interval between two events *does not* have to be the same for observers in relative motion. Therefore we must replace Galileo's transformation by another, so that the speed of light is invariant. As in the case of Galileo's transformation, we shall assume that observers O and O' are moving with relative velocity $\boldsymbol{v}$ and that the X- and X'-axes will point in the direction of their relative motion, the axes YZ and $Y'Z'$ being parallel, respectively (Fig. 6–14). We may also assume that both observers set their clocks so that $t = t' = 0$ when they coincide.

Suppose that at $t = 0$ a flash of light is emitted at their common position. After a time t observer O will note that the light has reached point A and will write $r = ct$, where c is the speed of light.

Since

$$r^2 = x^2 + y^2 + z^2,$$

we may also write

$$x^2 + y^2 + z^2 = c^2t^2. \tag{6.30}$$

Similarly, observer O' will note that the light arrives at the same point A in a time t', but also with velocity c. Therefore he writes $r' = ct'$, or

$$x'^2 + y'^2 + z'^2 = c^2t'^2. \tag{6.31}$$

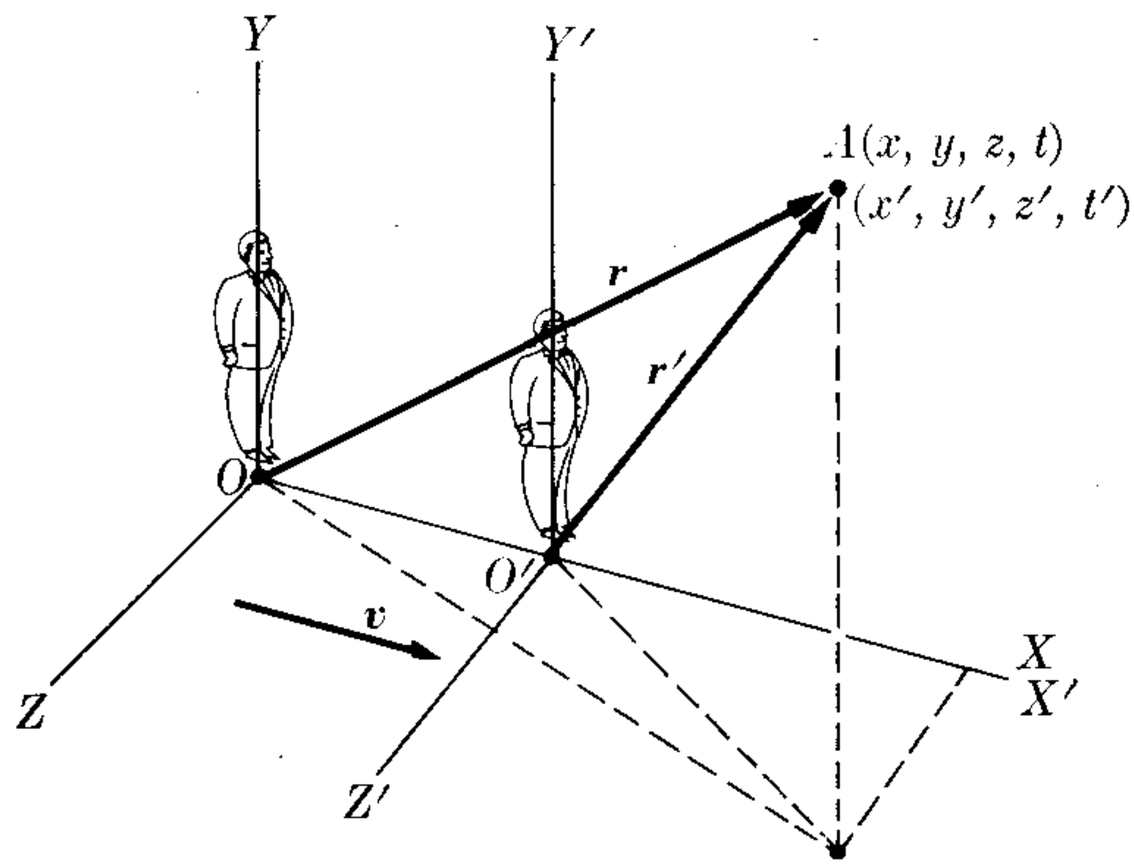

Fig. 6–14. Frames of reference in uniform relative translational motion.

Our next task is to obtain a transformation relating Eqs. (6.30) and (6.31). The symmetry of the problem suggests that $y' = y$ and $z' = z$. Also since $OO' = vt$ for observer O, it must be that $x = vt$ for $x' = 0$ (point O'). This suggests making $x' = k(x - vt)$, where k is a constant to be determined. Since t' is different, we may also assume that $t' = a(t - bx)$, where a and b are constants to be determined (for the Galilean transformation $k = a = 1$ and $b = 0$). Making all these substitutions in Eq. (6.31), we have

$$k^2(x^2 - 2vxt + v^2t^2) + y^2 + z^2 = c^2a^2(t^2 - 2bxt + b^2x^2),$$

or

$$(k^2 - b^2a^2c^2)x^2 - 2(k^2v - ba^2c^2)xt + y^2 + z^2 = (a^2 - k^2v^2/c^2)c^2t^2.$$

This result must be identical to Eq. (6.30). Therefore

$$k^2 - b^2a^2c^2 = 1, \qquad k^2v - ba^2c^2 = 0, \qquad a^2 - k^2v^2/c^2 = 1.$$

Solving this set of equations, we have

$$k = a = \frac{1}{\sqrt{1 - v^2/c^2}} \qquad \text{and} \qquad b = v/c^2. \tag{6.32}$$

The new transformation, which is compatible with the invariance of the velocity of light, is then

$$\begin{aligned} x' &= k(x - vt) = \frac{x - vt}{\sqrt{1 - v^2/c^2}}, \\ y' &= y, \\ z' &= z, \\ t' &= k(t - bx) = \frac{t - vx/c^2}{\sqrt{1 - v^2/c^2}}. \end{aligned} \tag{6.33}$$

This set of relations is called the *Lorentz transformation* because it was first obtained by the Dutch physicist Hendrik Lorentz, about 1890, in connection with the problem of the electromagnetic field of a moving charge.

When we note that c is a velocity very large compared with the great majority of velocities that we encounter on the earth, so that the ratio v/c is very small, the terms v^2/c^2 and vx/c^2 are, in general, negligible, and k is practically equal to

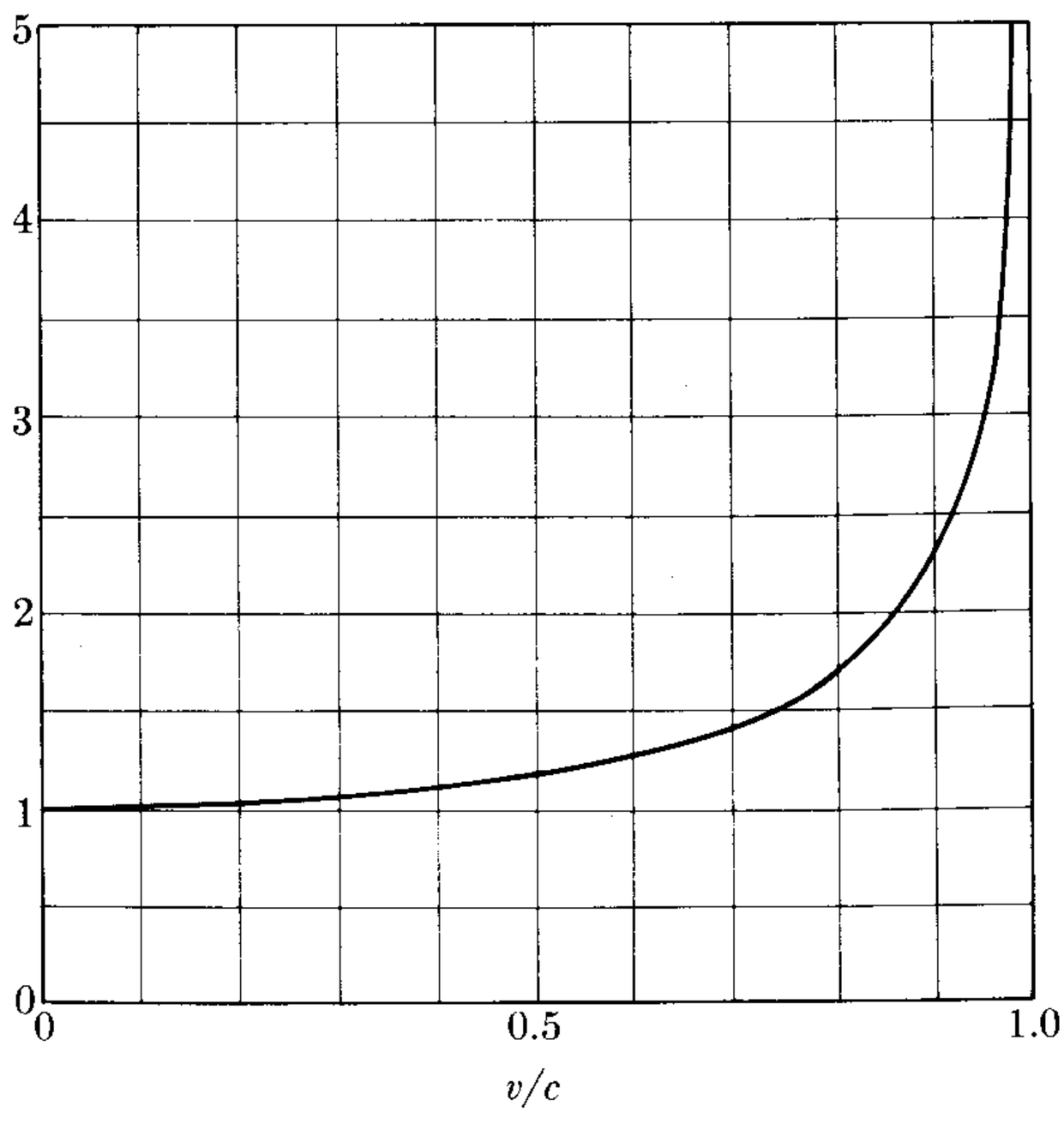

Fig. 6–15. Change of k with v/c.

one (see Fig. 6–15). From the practical point of view, then, there is no difference between Lorentz' and Galileo's transformations, and we may keep using the latter in most of the problems we encounter. However, when we are dealing with very fast particles, such as the electrons in atoms or particles in cosmic rays, we *must* use the Lorentz—or relativistic—transformation.

Even though in the majority of instances the numerical results of the Lorentz transformation do not differ to any great extent from those of the Galilean transformation, from a theoretical point of view the Lorentz transformation represents a most profound conceptual change, especially with regard to space and time.

EXAMPLE 6.4. Obtain the Lorentz transformation that expresses the coordinates x, y, z and the time t measured by O in terms of the coordinates x', y', z' and the time t' measured by O'.

Solution: This is the Lorentz transformation inverse to that expressed by Eq. (6.33). Of course, the second and third relations do not offer any difficulty. A straightforward method of handling the first and fourth equations is to look at them as a set of two simultaneous equations and, by a direct algebraic procedure, solve them for x and t in terms of x' and t'. We shall leave this method as an exercise to the student, however, and proceed along a more physical line of reasoning. From the point of view of observer O', observer O recedes along the $-X'$ direction with a velocity $-\boldsymbol{v}$. Thus O' is entitled to use the same Lorentz transformation to obtain the values x and t measured by O in terms of the values x' and t' which O' measures. For that observer O' has only to replace $\boldsymbol{v}$ by $-\boldsymbol{v}$ in Eq. (6.33) and exchange x, t and x', t'. Thus

$$\begin{aligned} x &= \frac{x' + vt'}{\sqrt{1 - v^2/c^2}}, \\ y &= y', \\ z &= z', \\ t &= \frac{t' + vx'/c^2}{\sqrt{1 - v^2/c^2}}, \end{aligned} \tag{6.34}$$

which give the inverse Lorentz transformation.

6.7 Transformation of Velocities

Next let us obtain the rule for comparing velocities. The velocity of A as measured by O has components

$$V_x = \frac{dx}{dt}, \qquad V_y = \frac{dy}{dt}, \qquad V_z = \frac{dz}{dt}. \tag{6.35}$$

Similarly, the components of the velocity of A as measured by O' are

$$V'_{x'} = \frac{dx'}{dt'}, \qquad V'_{y'} = \frac{dy'}{dt'}, \qquad V'_{z'} = \frac{dz'}{dt'}.$$

Note that we now use dt' and not dt, because t and t' are no longer the same. Differentiating Eqs. (6.33), we have

$$\begin{aligned} dx' &= \frac{dx - v\,dt}{\sqrt{1 - v^2/c^2}} = \frac{V_x - v}{\sqrt{1 - v^2/c^2}}\,dt, \\ dy' &= dy, \\ dz' &= dz, \\ dt' &= \frac{dt - v\,dx/c^2}{\sqrt{1 - v^2/c^2}} = \frac{1 - vV_x/c^2}{\sqrt{1 - v^2/c^2}}\,dt. \end{aligned}$$

In the first and last equations, dx has been replaced by $V_x\,dt$, according to Eq. (6.35). Therefore, dividing the first three of these equations by the fourth, we obtain

$$\begin{aligned} V'_{x'} &= \frac{dx'}{dt'} = \frac{V_x - v}{1 - vV_x/c^2}, \\ V'_{y'} &= \frac{dy'}{dt'} = \frac{V_y\sqrt{1 - v^2/c^2}}{1 - vV_x/c^2}, \\ V'_{z'} &= \frac{dz'}{dt'} = \frac{V_z\sqrt{1 - v^2/c^2}}{1 - vV_x/c^2}. \end{aligned} \tag{6.36}$$

This set of equations gives the law for the Lorentz transformation of velocities; that is, the rule for comparing the velocity of a body as measured by two observers in uniform relative translational motion. Again this reduces to Eq. (6.10) for relative velocities which are very small compared with the velocity of light. For particles moving in the X-direction, we have $V_x = V$, $V_y = V_z = 0$. Therefore, with $V'_{x'} = V'$, since the two other components of V' are zero, Eq. (6.36) becomes

$$V' = \frac{V - v}{1 - vV/c^2}. \tag{6.37}$$

To verify that Eq. (6.37) is compatible with the assumption that the velocity of light is the same for both observers O and O', let us consider the case of a light signal propagating along the X-direction. Then $V = c$ in Eq. (6.37) and

$$V' = \frac{c - v}{1 - vc/c^2} = c.$$

Therefore observer O' also measures a velocity c. Solving Eq. (6.37) for V, we get

$$V = \frac{V' + v}{1 + vV'/c^2}, \tag{6.38}$$

which is the reverse transformation of Eq. (6.37). Note that if V' and v are both smaller than c, then V is also smaller than c. Furthermore, the velocity v cannot be larger than c because the scaling factor $\sqrt{1 - v^2/c^2}$ would become imaginary. We can ascribe no physical meaning at the present time to such a scaling factor. Therefore the velocity of light is the maximum velocity that can be observed.

It must also be noted that Eqs. (6.37) or (6.38) relate the velocity of the *same* body as measured by two observers in relative motion. However, a given observer combines *different* velocities in his own frame of reference according to the rules established in Chapter 3.

EXAMPLE 6.5. Verify the fact that the transformation of velocities, Eq. (6.36), is compatible with the assumption that the velocity of light is the same for both observers by considering a ray of light moving along (a) the Y-axis relative to XYZ, (b) the Y'-axis relative to $X'Y'Z'$.

Solution: (a) In this case we must make $V_x = 0$, $V_y = c$, and $V_z = 0$. Thus Eq. (6.36) becomes

$$V'_{x'} = -v, \qquad V'_{y'} = c\sqrt{1 - v^2/c^2}, \qquad V'_{z'} = 0.$$

Then the velocity relative to $X'Y'Z'$ is

$$V' = \sqrt{V'^2_{x'} + V'^2_{y'}} = \sqrt{v^2 + c^2(1 - v^2/c^2)} = c,$$

and observer O' also measures a velocity c for light, as was required when deriving the Lorentz transformation. Light appears to the moving observer O' to be propagating relative to the $X'Y'Z'$ frame in a direction making an angle with the X'-axis given by

$$\tan \alpha' = \frac{V'_{y'}}{V'_{x'}} = \frac{-c}{v}\sqrt{1 - v^2/c^2}.$$

(b) Let us now consider the case in which the observer O' sees the ray of light propagating along the Y'-axis. Then $V'_{x'} = 0$, and the first two expressions in Eq. (6.36) give

$$0 = \frac{V_x - v}{1 - vV_x/c^2}, \qquad V'_{y'} = \frac{V_y\sqrt{1 - v^2/c^2}}{1 - vV_x/c^2}.$$

From the first equation we get $V_x = v$, which, when placed in the second equation, yields

$$V'_{y'} = \frac{V_y}{\sqrt{1 - v^2/c^2}}.$$

But for observer O, who measures the velocity of light as c, we have

$$c = \sqrt{V_x^2 + V_y^2} = \sqrt{v^2 + V_y^2} \quad \text{or} \quad V_y = \sqrt{c^2 - v^2} = c\sqrt{1 - v^2/c^2},$$

which, when replaced in the previous expressions for $V'_{y'}$, gives $V'_{y'} = c$. Once more we verify that observer O' also measures the velocity of light as c. The direction in which observer O sees the ray of light makes an angle α with the X-axis given by

$$\tan \alpha = \frac{V_y}{V_x} = \frac{c}{v}\sqrt{1 - v^2/c^2}.$$

The results of this problem must be compared with those of Example 6.2 for sound, in which the Galilean transformation was used.

EXAMPLE 6.6. Obtain the relation between the acceleration of a particle as measured by two observers in relative motion. For simplicity, suppose that, at the instant of the comparison, the particle is at rest relative to observer O'.

Solution: The X-component of the acceleration of the particle, as measured by O', is

$$a'_{x'} = \frac{dV'_{x'}}{dt'} = \frac{dV'_{x'}}{dt}\frac{dt}{dt'}.$$

Using the value of $V'_{x'}$ from the first relation of Eq. (6.36) and inserting the appropriate derivatives, we have

$$a'_{x'} = \left[\frac{a_x}{1 - vV_x/c^2} + \frac{(V_x - v)va_x/c^2}{(1 - vV_x/c^2)^2}\right]\frac{\sqrt{1 - v^2/c^2}}{1 - vV_x/c^2} = a_x\frac{(1 - v^2/c^2)^{3/2}}{(1 - vV_x/c^2)^3}.$$

At the moment when the particle is at rest relative to O', $V_x = v$ and

$$a'_{x'} = \frac{a_x}{(1 - v^2/c^2)^{3/2}} = k^3 a_x.$$

By a similar analysis we find that

$$a'_{y'} = \frac{a_y}{1 - v^2/c^2} = k^2 a_y, \qquad a'_{z'} = \frac{a_z}{1 - v^2/c^2} = k^2 a_z.$$

This result differs from Eq. (6.14) for the Galilean transformation, since in this case the acceleration is not the same for both observers in uniform relative motion. In other words, the requirement that the velocity of light be invariant in all frames of reference which are in uniform motion relative to each other destroys the invariance of the acceleration.

It is important to know the relation between the magnitudes of the accelerations observed by O and O'. Now

$$\begin{aligned} a'^2 &= a'^2_{x'} + a'^2_{y'} + a'^2_{z'} \\ &= \frac{a_x^2}{(1 - v^2/c^2)^3} + \frac{a_y^2}{(1 - v^2/c^2)^2} + \frac{a_z^2}{(1 - v^2/c^2)^2} \\ &= \frac{a_x^2 + (a_y^2 + a_z^2)(1 - v^2/c^2)}{(1 - v^2/c^2)^3} \\ &= \frac{a^2 - v^2(a_y^2 + a_z^2)/c^2}{(1 - v^2/c^2)^3}. \end{aligned}$$

But $\boldsymbol{v} = \boldsymbol{u}_x v$ and $\boldsymbol{v} \times \boldsymbol{a} = -\boldsymbol{u}_y v a_z + \boldsymbol{u}_z v a_y$, so that $(\boldsymbol{v} \times \boldsymbol{a})^2 = v^2(a_y^2 + a_z^2)$. Therefore

$$a'^2 = \frac{a^2 - (\boldsymbol{v} \times \boldsymbol{a})^2/c^2}{(1 - v^2/c^2)^3}, \tag{6.39}$$

which is the desired relation. When the acceleration is parallel to the velocity, $\boldsymbol{v} \times \boldsymbol{a} = 0$ and $a' = a/(1 - v^2/c^2)^{3/2}$. This agrees with the result for a_x and $a'_{x'}$. When the acceleration is perpendicular to the velocity, $(\boldsymbol{v} \times \boldsymbol{a})^2 = v^2a^2$ and $a' = a/(1 - v^2/c^2)$, which is the result for a_y, a_z and $a'_{y'}$, $a'_{z'}$.

6.8 Consequences of the Lorentz Transformation

The scaling factor $k = 1/\sqrt{1 - v^2/c^2}$ that appears in Eq. (6.33) suggests that the lengths of bodies and the time intervals between given events may not be the same when measured by observers in relative motion. We shall now discuss this important question.

(1) ***Length Contraction.*** The length of an object may be defined as the distance between its two endpoints. However, if the object is in motion relative to the observer wishing to measure its length, the positions of the two endpoints must be recorded *simultaneously*. Let us consider a bar at rest relative to O' and parallel to the $O'X'$-axis. Designating its two extremes by a and b, its length as measured by O' is $L' = x'_b - x'_a$. Simultaneity is not essential for O' because he sees the bar at rest. However, observer O, who sees the bar in motion, must measure the coordinates x_a and x_b of the endpoints at the same time t, obtaining $L = x_b - x_a$. Applying the first relation in Eq. (6.33), we find that

$$x'_a = \frac{x_a - vt}{\sqrt{1 - v^2/c^2}}$$

and

$$x'_b = \frac{x_b - vt}{\sqrt{1 - v^2/c^2}}.$$

Note that we write the same t in both expressions. Now, subtracting

$$x'_b - x'_a = \frac{x_b - x_a}{\sqrt{1 - v^2/c^2}} \qquad \text{or} \qquad L = \sqrt{1 - v^2/c^2}\, L'. \tag{6.40}$$

Since the factor $\sqrt{1 - v^2/c^2}$ is smaller than unity, we have a situation in which L is smaller than L'; that is, observer O, who sees the object in motion, measures a *smaller* length than observer O', who sees the object at rest. In other words, *objects in motion appear to be shorter;* that is, $L_{\text{motion}} < L_{\text{rest}}$.

(2) ***Time Dilation.*** A *time interval* may be defined as the time elapsed between two events, as measured by an observer. An *event* is a specific occurrence that happens at a particular point in space and at a particular time. Thus, in terms of these definitions, when the bob of a pendulum reaches its highest point during a swing, this constitutes an event. After a certain period of time it will return to this same position; this is a second event. The elapsed time between these two events is then a time interval. Thus a time interval is the time it takes to do something: for a pendulum to oscillate, for an electron to rotate around a nucleus, for a radioactive particle to decay, for a heart to beat, etc.

Let us consider two events that occur at the same place x' relative to an observer O'. The time interval between these events is $T' = t'_b - t'_a$. For an observer O with respect to whom O' is moving at a constant velocity v in the positive X-direction, the time interval is $T = t_b - t_a$. To find the relation between the times at which the two events occurred, as recorded by both observers, we use the

last of Eqs. (6.34). This gives us

$$t_a = \frac{t'_a + vx'/c^2}{\sqrt{1 - v^2/c^2}}, \qquad t_b = \frac{t'_b + vx'/c^2}{\sqrt{1 - v^2/c^2}}.$$

Note that we write the same x' in both expressions. Therefore, by subtracting t_a from t_b, we have

$$t_b - t_a = \frac{t'_b - t'_a}{\sqrt{1 - v^2/c^2}} \qquad \text{or} \qquad T = \frac{T'}{\sqrt{1 - v^2/c^2}}. \tag{6.41}$$

Now T' is the time interval measured by an observer O' *at rest* with respect to the point where the events occurred, and T is the time interval measured by an observer O relative to whom the point is *in motion* when the events occurred. That is, observer O saw the events occur at two different positions in space. Since the factor $1/\sqrt{1 - v^2/c^2}$ is larger than one, Eq. (6.41) indicates that T is greater than T'. Therefore *processes appear to take a longer time when they occur in a body in motion relative to the observer than when the body is at rest relative to the observer; that is,* $T_{\text{motion}} > T_{\text{rest}}$.

It is informative to analyze time dilation and length contraction in greater detail, since these results are so contrary to our *a priori* expectations. We shall show in a more direct way that time dilation and length contraction are direct consequences of the invariance (constancy) of the velocity of light. Let us consider two observers O and O' in relative motion along the X-axis with velocity v. In Fig. 6–16, M' is a mirror at rest relative to O' and at a distance L from the origin along the Y'-axis. This is the same distance as measured by O, since the mirror is at a position perpendicular to the direction of motion. Suppose that, when O and O' are coincident, a light signal is flashed from their common origin toward the mirror. For the system that sees the mirror in motion, the light signal must be sent out at an angle dependent on the velocity of the mirror and the distance L. Let T and T' be the times recorded by O and O' for the light signal to return to O' after it has been reflected from the mirror. In the O'-system, the light will return to the origin, but in the O-system, the light will cross the X-axis at a distance vT from the origin. Relative to O', the path of the light signal is $O'M'O' = 2L$ and the time

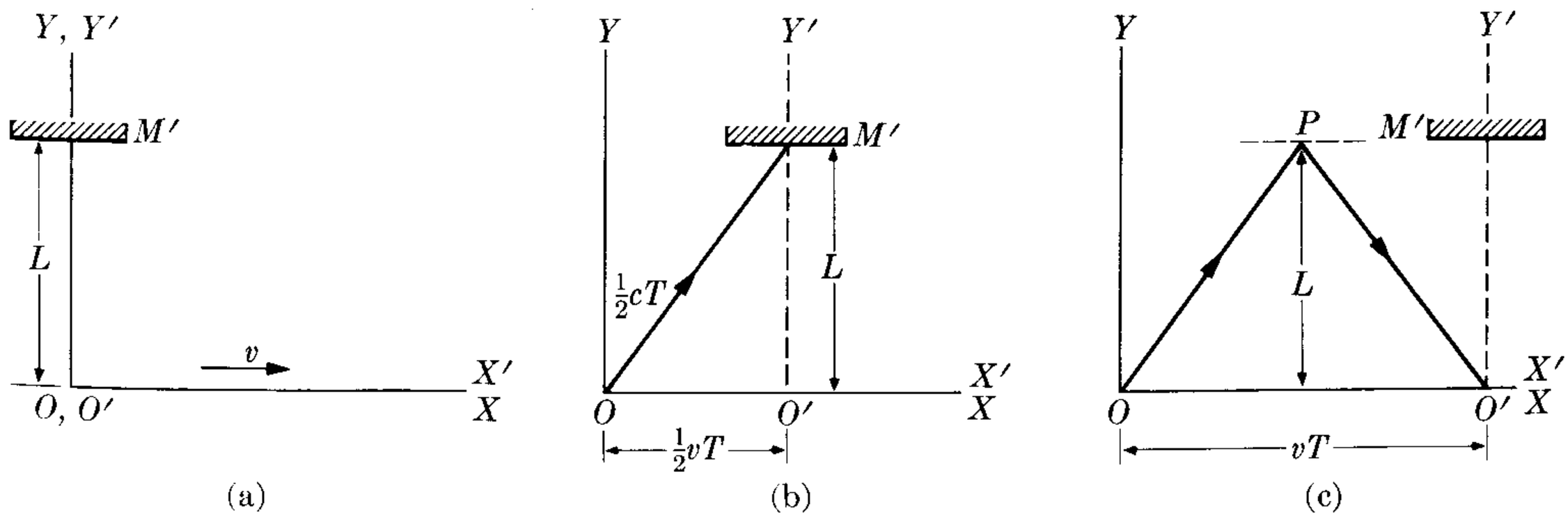

Figure 6–16

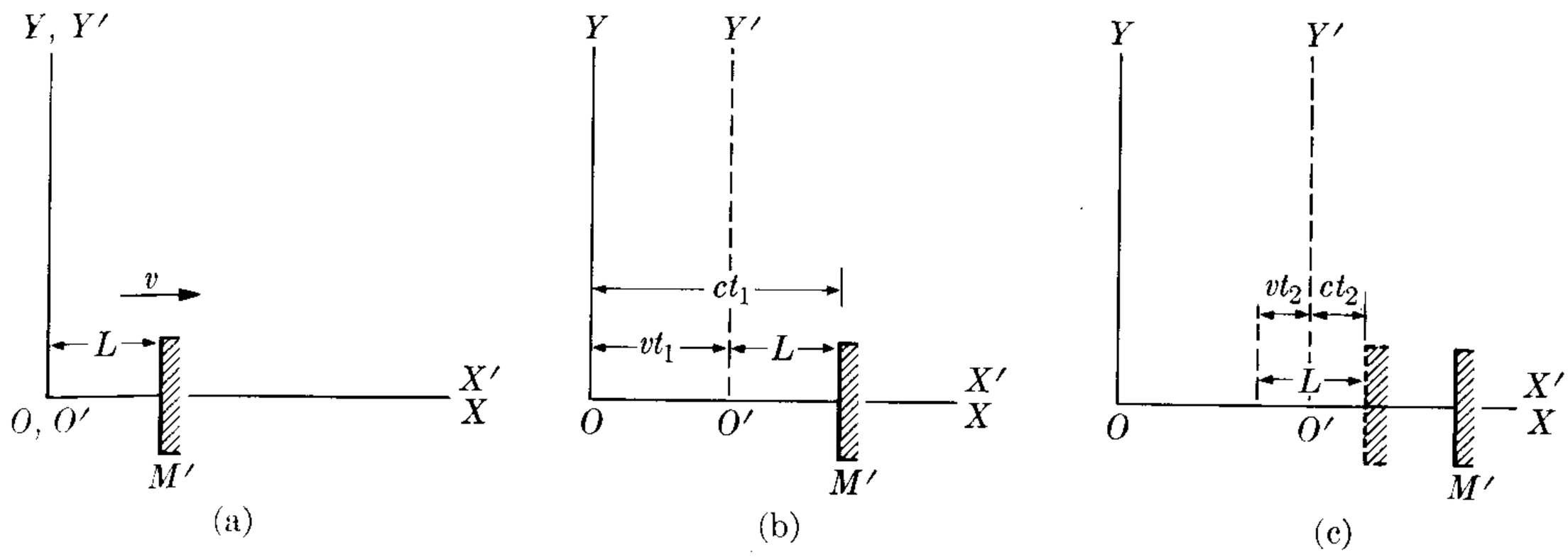

Figure 6–17

elapsed is $T' = 2L/c$, since O' measures the velocity of light as c. This time interval corresponds to two events taking place at the same point (O') relative to O'.

Relative to observer O, who also measures the velocity of light as c, the path of the light signal is OPO', and thus O sees the time relationship (from Fig. 6–16b) as being $(\frac{1}{2}cT)^2 = (\frac{1}{2}vT)^2 + L^2$ or $T = (2L/c)/\sqrt{1 - v^2/c^2}$. Therefore $T = T'/\sqrt{1 - v^2/c^2}$, which is just Eq. (6.41). Note that we have obtained time dilation specifically by requiring that the velocity of light be invariant for all inertial observers.

Next let us consider the mirror M' placed along the X'-axis and oriented perpendicular to it. We place it a distance L' from O' and consider the mirror at rest in the O'-system. The arrangement is shown in Fig. 6–17. Again when O and O' are coincident, a light signal is flashed toward the mirror. The times T and T' for the light to return to O' are again measured. The interval for O', who measures the velocity of light as c, is $T' = 2L'/c$. The distance $O'M'$ may not be the same for observer O, and we therefore call the distance L. Now the time, t_1, for the light to travel from O to the mirror is found from the relation $ct_1 = L + vt_1$ or $t_1 = L/(c - v)$, since M' has advanced the distance vt_1. On reflection, O measures a time t_2 for the light to reach O', who has moved a distance vt_2 in that time (see Fig. 6–17c). Thus $ct_2 = L - vt_2$ or $t_2 = L/(c + v)$. The total time required for the light to reach O', as measured by O, is thus

$$T = t_1 + t_2 = \frac{L}{c - v} + \frac{L}{c + v} = \frac{2L}{c}\,\frac{1}{1 - v^2/c^2}.$$

But T and T' correspond to two events occurring at the same place, relative to O', and are therefore related by Eq. (6.41). Thus

$$\frac{2L/c}{1 - v^2/c^2} = \frac{2L'/c}{\sqrt{1 - v^2/c^2}} \qquad \text{or} \qquad L = \sqrt{1 - v^2/c^2}\,L'.$$

This equation is identical to Eq. (6.40), since L' is a length at rest relative to O'. From these two special examples, we see that the constancy of the velocity of light for all inertial observers affects, in a very particular way, the results obtained by observers in relative motion.

EXAMPLE 6.7. *Analysis of the Michelson-Morley experiment.* At the beginning of Section 6.6, we mentioned the Michelson-Morley experiment. We shall describe it briefly now, and analyze the results. The experimental arrangement is shown schematically in Fig. 6–18, where S is a monochromatic source of light and M_1 and M_2 are two mirrors placed at the same distance L' from the glass plate P (as measured by a terrestrial observer). Light coming from S, when it reaches P, is partially transmitted toward M_1 and partially reflected toward M_2. Rays reflected at M_1 and M_2 retrace their paths and eventually reach the observer at O'. Note that the light path drawn in Fig. 6–18 is relative to a frame $X'Y'Z'$ moving with the earth and relative to which the instrument, called an *interferometer*, is at rest. [Drawing the path of light as seen by an observer relative to whom the earth is moving with a velocity v is suggested as an exercise for the student.] The actual experimental arrangement used by Michelson and Morley is illustrated in Fig. 6–19.

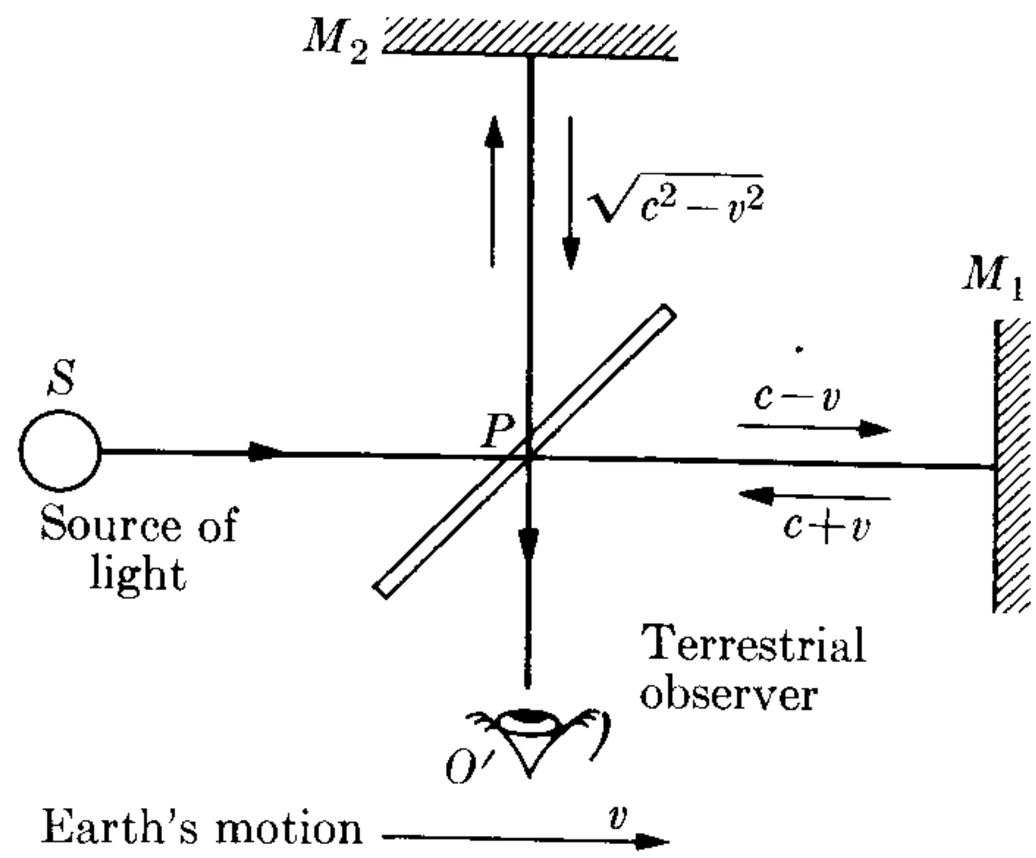

Fig. 6–18. Basic components of the Michelson-Morley experiment.

Solution: Let c be the velocity of light as measured by an observer stationary relative to the ether. Let us call v the velocity of the earth relative to the ether, and orient the interferometer so that the line PM_1 is parallel to the motion of the earth.

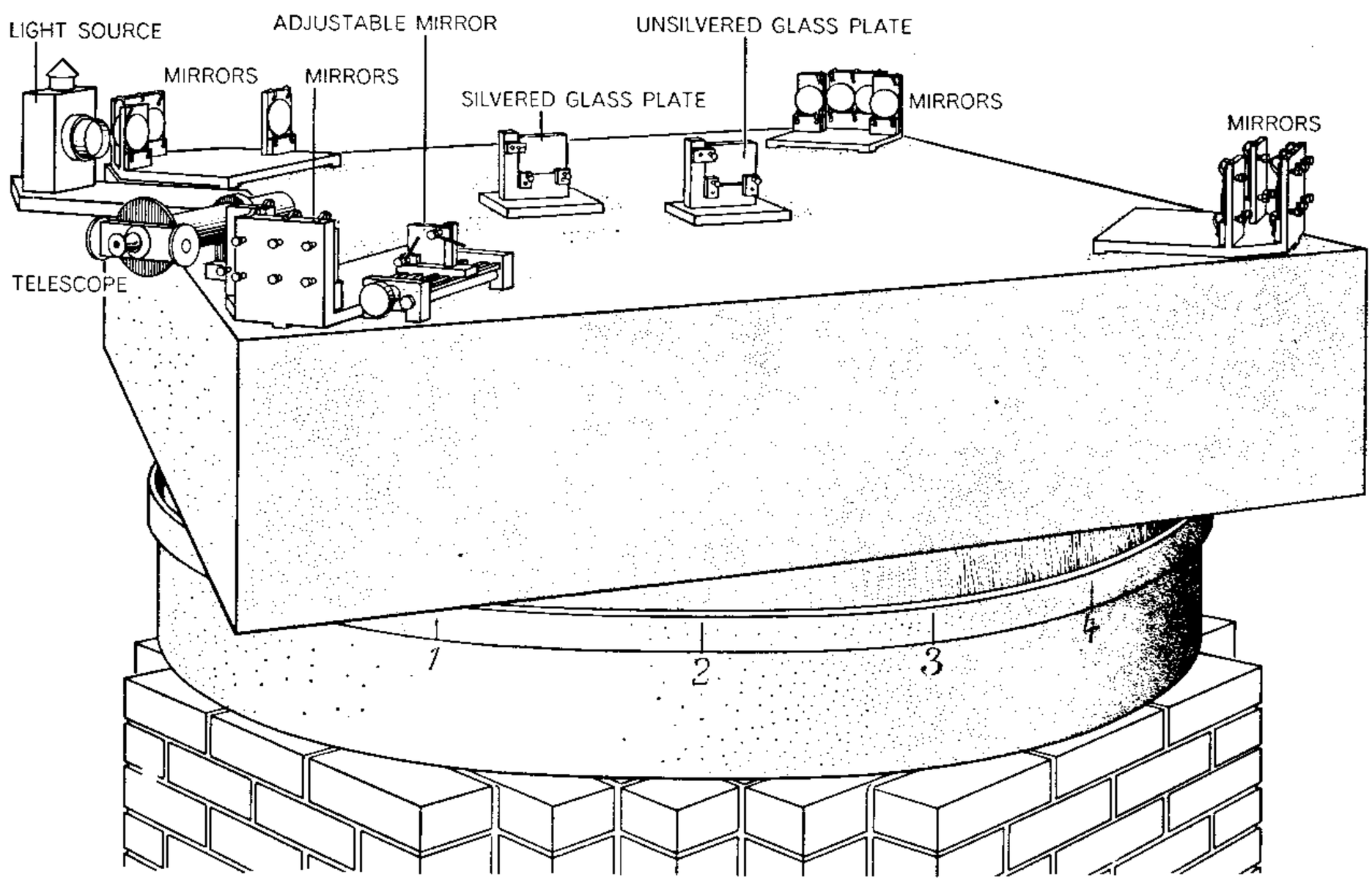

Fig. 6–19. Interferometer used by Michelson and Morley in their measurements of the velocity of light. Sandstone table holding mirrors is fixed to a wooden ring which floats on mercury. The series of mirrors serves to lengthen the total path of light. The unsilvered plate is placed along one path to compensate for the fact that the other path must pass through the glass of the mirror. The telescope permits one to observe the interference fringes. (Drawing courtesy of *Scientific American.*)

When we use the Galilean transformation, we find, following the results of Example 6.2, that, relative to the earth, the velocity of light going from P to M_1 is $c - v$, that from M_1 to P it is $c + v$, and that from P to M_2 or from M_2 to P it is $\sqrt{c^2 - v^2}$. Thus the time required by light to go from P to M_1 and back to P, as measured by the terrestrial observer O', is

$$t'_{\parallel} = \frac{L'}{c - v} + \frac{L'}{c + v} = \frac{2L'c}{c^2 - v^2} = \frac{2L'/c}{1 - v^2/c^2},$$

while the time required to go from P to M_2 and back to P, as measured by O', is

$$t'_{\perp} = \frac{2L'}{\sqrt{c^2 - v^2}} = \frac{2L'/c}{\sqrt{1 - v^2/c^2}}.$$

We note that $t'_{\parallel}$ and $t'_{\perp}$ are different, and therefore the rays that reach observer O' have a certain path difference and (according to the theory presented in Chapter 22) should result in a certain interference pattern. Surprisingly, *no* such interference pattern is observed, as previously indicated in Section 6.6.* This suggests that $t'_{\parallel} = t'_{\perp}$. To solve this puzzle Lorentz, and independently Fitzgerald, proposed that all objects moving through the ether suffer a "real" contraction in the direction of motion, and that this contraction was just enough to make $t'_{\parallel} = t'_{\perp}$. That means that the length that appears in $t'_{\parallel}$ must not be the same as the length in $t'_{\perp}$, because the first is in the direction of the earth's motion and the other is perpendicular to it. Writing L for L' in the expression for $t'_{\parallel}$, we must have

$$t'_{\parallel} = \frac{2L/c}{1 - v^2/c^2}.$$

Equating $t'_{\parallel}$ and $t'_{\perp}$, we obtain, after simplifying,

$$L = \sqrt{1 - v^2/c^2}\, L'. \tag{6.42}$$

This expression relates the lengths PM_1 and PM_2 as measured by an observer O at rest relative to the ether. Observer O' should not notice this contraction, because the measuring stick he uses to measure the distance PM_1 is also contracted to the same degree as PM_1 when placed in the direction of the earth's motion! Thus, to him, the lengths PM_1 and PM_2 are equal. But observer O would laugh at the worries of O', since he realizes that O' is in motion and, according to the Lorentz-Fitzgerald hypothesis, the objects he carries are all shortened in the direction of motion. Thus O concludes that the "real" length of PM_1 is L and that of PM_2 is L', this "real" difference in length being the source of the negative result obtained when the interference of the two light beams was examined.

Of course, an alternative explanation of the negative result of the Michelson-Morley experiment is to assume that the speed of light is always the same in all directions, no matter what the state of motion of the observer. Then observer O' uses c for all paths of Fig. 6–18, and then $t'_{\parallel} = t'_{\perp} = 2L'/c$. This was the position adopted by Albert Einstein when he was formulating his principle of relativity. The student may, however, at this

* In the actual experiment performed by Michelson, the two arms of the interferometer, or to be more precise the optical lengths of both light paths, were slightly different, resulting in an interference pattern. Therefore Michelson, to compensate for this difference and actually increase the precision of his measurement, rotated the instrument (Fig. 6–19). And although the theory, which was based on the Galilean transformation, predicted a shift in the interference pattern as a result of the rotation, no such shift was observed.

moment say that the "real" contraction assumed by Lorentz to explain the negative result of the Michelson-Morley experiment is exactly the same as the contraction we found in Eq. (6.40) by using the Lorentz transformation and the principle of the invariance of the velocity of light. There is, however, a fundamental difference between the two underlying hypotheses used for obtaining these two apparently identical results: (1) The contraction (6.42), obtained by means of the Galilean transformation, is assumed to be a *real* contraction suffered by all bodies moving through the ether, and the v appearing in the formula is the velocity of the object relative to the ether. (2) Contraction (6.40) refers only to the *measured* value of the length of the object in motion relative to the observer, and is a consequence of the invariance of the velocity of light. The v appearing in the formula is the velocity of the object relative to the observer, and thus the contraction is different for different observers. It was the genius of Einstein that led him to realize that the idea of an ether was artificial and unnecessary, and that the logical explanation was the second one. This was the basic postulate which Einstein used to formulate the principle of relativity, as we shall see in Chapter 11.

References

1. "The Coriolis Effect," J. McDonald, *Sci. Am.*, May 1952, page 72
2. "The Speed of Light," J. Rush, *Sci. Am.*, August 1955, page 62
3. "The Clock Paradox," J. Bronowski, *Sci. Am.*, February 1963, page 134
4. "Conversations with Albert Einstein," R. Shankland, *Am. J. Phys.* **31,** 47 (1963).
5. "Michelson-Morley Experiment," R. Shankland, *Am. J. Phys.* **32,** page 16 (1964); *Sci. Am.*, November 1964, page 107
6. "Measurement of the Relativistic Time Dilation Using μ-Mesons," D. Frisch and J. Smith, *Am. J. Phys.* **31,** 342 (1963)
7. "The Geometrical Appearance of Large Objects Moving at Relativistic Speeds," G. D. Scott and M. R. Viner, *Am. J. Phys.* **33,** 534 (1965)
8. "Visual Appearance of Rapidly Moving Objects," V. Weisskopf, *Physics Today*, September 1960, page 24
9. "Resource Letter SRT-1 on Special Relativity Theory," G. Holton, *Am. J. Phys.* **30,** 462 (1962)
10. *An Introduction to the Special Theory of Relativity*, R. Katz. Princeton, N.J.: Momentum Books, D. Van Nostrand Co., 1964
11. *The Special Theory of Relativity*, D. Bohm. New York: W. A. Benjamin, 1964
12. *An Introduction to the Special Theory of Relativity*, W. G. W. Rossen. London: Butterworth & Co., 1964, Chapters 1–4
13. *Special Relativity Theory*, selected reprints from the *Am. J. Phys.*, published by the AIP (335 E. 45th St., New York 17, N.Y.), 1962
14. *Mechanics*, Keith R. Symon. Reading, Mass.: Addison-Wesley, 1960, Sections 7–1 through 7–4
15. *Physical Mechanics*, Robert B. Lindsay. New York: Van Nostrand, 1961, Sections 7–11 and 7–12
16. *Vector Mechanics*, D. E. Christie. New York: McGraw-Hill, 1964, Chapter 14

17. *The Feynman Lectures on Physics*, Volume I, R. P. Feynman, R. B. Leighton, and M. L. Sands. Reading, Mass.: Addison-Wesley, 1963, Chapters 15, 18, and 20

18. *Source Book in Physics*, W. F. Magie. Cambridge, Mass.: Harvard University Press, 1963, page 27 (Huygens); page 369 (Michelson and Morley)

Problems

6.1 Two trains, A and B, are running on parallel tracks at 70 km hr^{-1} and 90 km hr^{-1}, respectively. Calculate the relative velocity of B with respect to A, when: (a) they move in the same direction, (b) they move in opposite directions.

6.2 Solve the previous problem if the tracks are set at an angle of 60° with respect to each other.

6.3 A train leaves city A at 12 noon for city B 400 km away, and maintains a constant speed of 100 km hr^{-1}. Another train leaves city B at 2:00 P.M. and maintains a constant speed of 70 km hr^{-1}. Determine the time at which the trains pass and the distance to city A if (a) the second train heads toward city A, and (b) the second train heads away from city A.

6.4 A man driving through a rainstorm at 80 km hr^{-1} observes that the raindrops make tracks on the side windows that have an angle of 80° with the vertical. When he stops his car, he observes that the rain is actually falling vertically. Calculate the relative velocity of the rain with respect to the car (a) when it is still, and (b) when it is moving at 80 km hr^{-1}.

6.5 Two cars moving along perpendicular roads are traveling north and east, respectively. If their velocities with respect to the ground are 60 km hr^{-1} and 80 km hr^{-1}, calculate their relative velocity. Does the relative velocity depend on the position of the cars on their respective roads? Repeat the problem, assuming that the second car moves west.

6.6 A boat is moving in the direction N 60° W at 4.0 km hr^{-1} relative to the water. The current is in such a direction that the resultant motion relative to the earth is due west at 5.0 km hr^{-1}. Calculate the velocity and direction of the current with respect to the earth.

6.7 The velocity of a speedboat in still water is 55 km hr^{-1}. The driver wants to go to a point located 80 km away at S 20° E. The current is very strong at 20 km hr^{-1} in the direction S 70° W. (a) Calculate which direction the speedboat should be headed so that it travels in a straight line. (b) Determine the length of time for the trip.

6.8 A river flows due north with a velocity of 3 km hr^{-1}. A boat is going east with a velocity relative to the water of 4 km hr^{-1}. (a) Calculate the velocity of the boat relative to the earth. (b) If the river is 1 km wide, calculate the time necessary for a crossing. (c) What is the northward deviation of the boat when it reaches the other side of the river?

6.9 Two places, A and B, are 1 km apart and located on the bank of a rectilinear (perfectly straight) river section. A man goes from A to B and back to A in a rowboat that is rowed at 4 km hr^{-1} relative to the river. Another man walks along the bank from A to B and back again at 4 km hr^{-1}. If the river flows at 2 km hr^{-1}, calculate the time taken by each man to make the round trip.

6.10 Using the data of the previous problem, determine the speed of the river so that the time difference for the two round trips is 6 min.

6.11 A river is 1 km wide. The current is 2 km hr^{-1}. Determine the time it would take a man to row a boat directly across the river and back again. Compare this time with the time it would take a man to

row 1 km upstream and back again. The rowboat moves with a constant velocity of 4 km hr^{-1} with respect to the water.

6.12 Using the data of the previous problem, determine the current velocity if the time difference between the two round trips is 10 minutes.

6.13 Given a coordinate system fixed with respect to the earth (assume the earth flat and "motionless"). Consider a bullet that has a muzzle velocity of 800 ft s^{-1} fired from the tail gun of an airplane moving with a velocity of 700 ft s^{-1} (approximately 440 mi hr^{-1}). Describe the motion of the bullet (a) in the earth's coordinate system, (b) in the coordinate system attached to the plane. (c) Calculate the angle at which the gunner must point the gun so that the bullet has no horizontal component of velocity in the earth's coordinate system.

6.14 The position of a particle Q in a coordinate system O is measured as $\boldsymbol{r} = \boldsymbol{u}_x(6t^2 - 4t) + \boldsymbol{u}_y(-3t^3) + \boldsymbol{u}_z 3$ m. (a) Determine the constant relative velocity of system O' with respect to O if the position of Q is measured as $\boldsymbol{r}' = \boldsymbol{u}_x(6t^2 + 3t) + \boldsymbol{u}_y(-3t^3) + \boldsymbol{u}_z 3$ m. (b) Show that the acceleration of the particle is the same in both systems.

6.15 A train passes through a station at 30 m s^{-1}. A ball is rolling along the floor of the train with a velocity of 15 m s^{-1} directed (a) along the direction of the train's motion, (b) in the opposite direction, and (c) perpendicular to the motion. Find, in each case, the velocity of the ball relative to an observer standing on the station platform.

6.16 A particle with a velocity of 500 m s^{-1} relative to the earth is heading due south at latitude 45° N. (a) Compute the centrifugal acceleration of the particle. (b) Compute the Coriolis acceleration of the particle. (c) Repeat the problem for the position latitude 45° S.

6.17 A body falls from a height of 200 m at a point whose latitude is 41° N. Find the eastward deviation with respect to the point directly (radially) below. Repeat this problem for a point at latitude 41° S.

6.18 A river is flowing southward (northward) at a rate of 9 km/hr at 45° latitude N (S). Find the Coriolis acceleration. Show that in the Northern (Southern) hemisphere it pushes the water against the right (left) bank. This effect produces a somewhat larger erosion on the right (left) bank that has been noticed in some cases.

6.19 You are flying along the equator due east in a jet plane at 450 m s^{-1} (about 1000 mi hr^{-1}). What is your Coriolis acceleration?

6.20 The planet Jupiter rotates on its axis once in 9 hr and 51 min, has a radius of approximately 7×10^4 km, and the acceleration due to gravity at its surface is 26.5 m s^{-2}. What is the maximum deviation of the plumb line from the radial direction on the surface of Jupiter?

6.21 Compare the values of the acceleration of gravity given in Table 6–1 with the theoretical values predicted by Eq. (6.29).

6.22 A body is thrown vertically upward with a velocity v_0. Prove that it will fall back on a point displaced to the west by a distance equal to $(\frac{4}{3})\omega \cos \lambda \sqrt{8h^3/g}$, where $h = v_0^2/2g$.

6.23 Obtain the expressions for the velocity and acceleration of a point as recorded by two observers O and O' moving with relative angular velocity $\boldsymbol{\omega}$, when $\boldsymbol{\omega}$ is not constant. Consider this problem when the origins coincide and then when they are displaced.

6.24 Observers O and O' are in relative translational motion with $v = 0.6c$. (a) Observer O sees that a stick, aligned parallel to the motion, is at rest relative to him and measures 2.0 m. How long is the stick according to O'? (b) If the same stick is at rest in O', and is aligned parallel to the motion, how long is the stick according to O and O'?

6.25 Determine the relative velocity of a stick which has a measured length equal to $\frac{1}{2}$ of its rest length.

6.26 By what amount does the earth appear shortened along its diameter to an observer at rest relative to the sun? (The orbital velocity of the earth relative to the sun is 30 km s^{-1}, and the radius of the earth is given in Table 13–1.)

6.27 A rocket ship heading toward the moon passes the earth with a relative velocity of $0.8c$. (a) How long does the trip from the earth to the moon take, according to an observer on the earth? (b) What is the earth–moon distance, according to a passenger on the rocket? (c) How long does the trip take, according to the passenger?

6.28 The average lifetime of a neutron, as a free particle at rest, is 15 min. It disintegrates spontaneously into an electron, proton, and neutrino. What is the average minimum velocity with which a neutron must leave the sun in order to reach the earth before breaking up?

6.29 A μ-meson is an unstable particle whose mean life is 2×10^{-6} s as measured by an observer at rest relative to the meson. What will be its mean life to an observer who sees the meson moving with a velocity of $0.9c$? If a large burst of such mesons is produced at a certain point in the atmosphere, but only 1% reach the earth's surface, estimate the height of the point where the burst originated.

6.30 A radioactive nucleus is moving with a velocity of $0.1c$ relative to the laboratory when it emits an electron with a velocity of $0.8c$ relative to the nucleus. What is the velocity and direction of the electron relative to the laboratory if, relative to the frame of reference attached to the decaying nucleus, the electron is emitted (a) in the direction of motion, (b) in the opposite direction, (c) in the perpendicular direction?

6.31 Observers O and O' are in relative translational motion, with $v = 0.6c$. They coincide at $t = t' = 0$. When five years have passed, according to O, how long does it take a light signal to get from O to O'? With this information known by both O and O', how much time has elapsed according to O' since O and O' coincided? A light placed at O is turned on for one year. How long is the light on, according to O'?

6.32 Answer the previous problem when the relative translation motion is $0.9c$.

6.33 A rocket, whose rest length is 60 m, is moving directly away from the earth. The ship is fitted with mirrors at each end. A light signal, sent from the earth, is reflected back from the two mirrors. The first light signal is received after 200 s and the second 1.74 μs later. Find the distance of the rocket from the earth and its velocity relative to the earth.

6.34 An astronaut wishes to go to a star five light years away. Calculate the velocity of his rocket relative to the earth so that the time, as measured by the astronaut's own clock, is one year. What will be the time for this mission as recorded by a terrestrial observer?

6.35 A student is given an examination to be completed in one hour, as measured by the professor's clock. The professor moves at a velocity of $0.97c$ relative to the student and sends back a light signal when his clock reads one hour. The student stops writing when the light signal reaches him. How much time did the student have for the examination?

6.36 A scientist wishes to use the Michelson-Morley method to measure wind velocity, by sending out sound signals on two perpendicular paths. He assumes the velocity of sound to be 300 m s^{-1} and the path length to be 100 m. What minimum wind velocity can he detect if he can measure a time difference $\Delta t \geq 0.001$ s?

6.37 Prove that the general Lorentz transformation when the coordinate axes used by O and O' are not parallel to the relative velocity is

$$\boldsymbol{r}' = \boldsymbol{r} + (k - 1)\frac{(\boldsymbol{r} \cdot \boldsymbol{v})\boldsymbol{v}}{v^2} - k\boldsymbol{v}t,$$

$$t' = k(t - \boldsymbol{r} \cdot \boldsymbol{v}/c^2).$$

[*Hint:* Resolve vectors $\boldsymbol{r}$ and $\boldsymbol{r}'$ into components parallel and perpendicular to $\boldsymbol{v}$; note that $\boldsymbol{r}' = \boldsymbol{r}'_{\parallel} + \boldsymbol{r}'_{\perp}$ and $\boldsymbol{r}_{\parallel} = (\boldsymbol{r} \cdot \boldsymbol{v})\boldsymbol{v}/v^2$.]

6.38 Prove that if V and V' are the magnitudes of the velocity of a particle as measured by observers O and O' moving along the X-axis with relative velocity v, then

$$\sqrt{1 - V'^2/c^2} = \frac{\sqrt{(1 - v^2/c^2)(1 - V^2/c^2)}}{1 - vV_x/c^2}$$

and

$$\sqrt{1 - V^2/c^2} = \frac{\sqrt{(1 - v^2/c^2)(1 - V'^2/c^2)}}{1 + vV'_x/c^2}.$$

6.39 Prove that the general transformation for the acceleration of a particle as measured by O and O', when the particle moves with velocity V relative to O, is

$$a'_x = \frac{a_x(1 - v^2/c^2)^{3/2}}{(1 - vV_x/c^2)^3},$$

$$a'_y = \frac{1 - v^2/c^2}{(1 - vV_x/c^2)^2}\left(a_y + a_x \frac{vV_y/c^2}{1 - vV_x/c^2}\right),$$

$$a'_z = \frac{1 - v^2/c^2}{(1 - vV_x/c^2)^2}\left(a_z + a_x \frac{vV_z/c^2}{1 - vV_x/c^2}\right).$$

6.40 Prove that when v is almost equal to c, then $k \approx 1/\sqrt{2(1 - v/c)}$, and that when v is very small compared with c, then $k \approx 1 + v^2/2c^2$.

6.41 A cubical box, of side L_0 as measured by an observer O' at rest with it, moves with velocity v parallel to one side relative to another observer O. Prove that the volume measured by O is $L_0^3\sqrt{1 - v^2/c^2}$.

6.42 A particle moves relative to an observer O so that its position at time t is $x = vt, y = \frac{1}{2}at^2$ and its path is a parabola. Describe its motion relative to an observer O' who moves relative to O with a velocity v. In particular, find its path and its acceleration.

6.43 A meter stick is held at an angle of 45° with respect to the direction of motion in a moving coordinate system. What is its length and its orientation, measured in the laboratory system, if the moving system has a velocity of $0.8c$?

6.44 *Discussion of simultaneity.* (a) Prove that if two events occur relative to observer O at times t_1 and t_2 and at places x_1 and x_2, and if $T = t_2 - t_1$, $L = x_2 - x_1$, the events appear to observer O' (moving relative to O with velocity v along the X-axis) at times t'_1 and t'_2 such that, if

$$T' = t'_2 - t'_1,$$

then

$$T' = k(T - vL/c^2).$$

(b) In general, are events that appear as simultaneous to O also simultaneous to O'? Under what conditions are events that appear simultaneous to O also simultaneous to all other observers in uniform relative motion? (c) Obtain the relation between L and T such that the order in which two events, as observed by O', is reversed for O. (d) Suppose that events (x_1, t_1) and (x_2, t_2) observed by O are related causally [that is, (x_2, t_2) is the result of some signal transmitted from (x_1, t_1) with velocity $V = L/T$, by necessity smaller than or equal to c]. Can the order of the events appear reversed to O'? [Note that if the answer is yes, then the theory requires that $V > c$.]

6.45 Prove that the law of transformation of velocities can be written in vector form as

$$\boldsymbol{V}' = \frac{1}{k(1 - \boldsymbol{V}\cdot\boldsymbol{v}/c^2)}\left[\boldsymbol{V} + (k-1)\frac{\boldsymbol{V}\cdot\boldsymbol{v}}{v^2}\boldsymbol{v} - k\boldsymbol{v}\right].$$

6.46 Prove that the law of transformation of accelerations can be written in vector form as

$$\boldsymbol{a}' = \frac{1}{k^3(1 - \boldsymbol{V}\cdot\boldsymbol{v}/c^2)^3}\left[\boldsymbol{a} + \left(\frac{1}{k} - 1\right)\frac{\boldsymbol{a}\cdot\boldsymbol{v}}{v^2}\boldsymbol{v} - \frac{1}{c^2}\boldsymbol{v}\times(\boldsymbol{a}\times\boldsymbol{V})\right].$$

7
DYNAMICS OF A PARTICLE

7.1 Introduction
7.2 The Law of Inertia
7.3 Linear Momentum
7.4 Principle of Conservation of Momentum
7.5 Redefinition of Mass
7.6 Newton's Second and Third Laws; Concept of Force
7.7 Critique of the Concept of Force
7.8 Units of Force
7.9 Frictional Forces
7.10 Frictional Forces in Fluids
7.11 Systems with Variable Mass
7.12 Curvilinear Motion
7.13 Angular Momentum
7.14 Central Forces
7.15 Equilibrium and Rest

7.1 Introduction

In Chapter 5, which dealt with kinematics, we discussed the elements that enter into the "description" of the motion of a particle. Let us now investigate the reasons *why* particles move the way they do. Why do bodies near the surface of the earth fall with constant acceleration? Why does the earth move around the sun in an elliptical orbit? Why do atoms bind together to form molecules? Why does a spring oscillate when it is stretched? We want to understand these and many other motions that we continually observe around us. This understanding is important not only to our basic knowledge of nature, but also for engineering and practical applications. Understanding how motions in general are produced enables us to design machines and other practical devices that move as we desire. The study of the relationship between the motion of a body and the causes for this motion is called *dynamics*.

From daily experience we know that the motion of a body is a direct result of its *interactions* with the other bodies around it. When a batter hits a ball, he is interacting with it and modifying its motion. The path of a projectile is but a result of its interaction with the earth. The motion of an electron around a nucleus is the result of its interactions with the nucleus and perhaps with other electrons. Interactions are conveniently described by a mathematical concept called *force*. The study of dynamics is basically the analysis of the relation between force and the changes in motion of a body.

The laws of motion which we shall present in the following discussion are generalizations arising from a careful analysis of the motions we observe around us and the extrapolation of our observations to certain ideal or simplified experiments.

7.2 The Law of Inertia

A *free particle* is one that is not subject to any interaction. Strictly speaking, there is no such thing, because each particle is subject to interactions with the rest of the particles in the world. Therefore a free particle should either be completely isolated, or else be the only particle in the world. But then it would be impossible to observe it because, in the process of observation, there is always an interaction between the observer and the particle. In practice, however, there are some particles which may be considered free, either because they are sufficiently far away from others for their interactions to be negligible, or because the interactions with the other particles cancel, giving a zero net interaction.

Let us now consider the *law of inertia*, which states that

> *a free particle always moves with constant velocity, or* (which amounts to the same thing) *without acceleration.*

That is, a free particle either moves in a straight line with constant speed or is at rest (zero velocity). This statement is also called *Newton's first law*, because it was stated initially by Sir Isaac Newton (1642–1727). It is the first of three "laws" which he enunciated in the seventeenth century.

We recall from Chapters 5 and 6 that motion is relative. Therefore, when we state the law of inertia we must indicate to whom or what the motion of the free

particle is referred. We assume that the motion of the particle is relative to an observer who is himself a free particle or system; i.e., who is not subject to interactions with the rest of the world. Such an observer is called an *inertial observer*, and the frame of reference he uses is called an *inertial frame of reference*. We assume that inertial frames of reference are not rotating, because the existence of rotations would imply that there are accelerations (or changes in velocity due to changes in direction), and therefore that there are interactions, which would be contrary to our definition of the inertial observer as being a "free particle," or one without acceleration. According to the law of inertia, different inertial observers may be in motion, relative to each other, with constant velocity. Therefore their observations are correlated through either the Galilean or the Lorentz transformation, depending on the magnitude of their relative velocities.

Because of its daily rotation and its interaction with the sun and the other planets, the earth is *not* an inertial frame of reference. However, in many cases the effects of the earth's rotation and interaction are negligible, and the frames of reference attached to our terrestrial laboratories can, without great error, be considered inertial. Nor is the sun an inertial frame of reference. Because of its interactions with the other bodies in the galaxy, it describes a curved orbit about the center of the galaxy (Fig. 7–1). However, since the sun's motion is more nearly rectilinear and uniform than that of the earth (the orbital acceleration of the earth is 15 million times that of the sun), the sun's resemblance to an inertial frame is much greater.

Let us illustrate some experiments performed in our terrestrial laboratories that support the law of inertia. A spherical ball resting on a smooth horizontal surface will remain at rest unless acted upon. That is, its velocity remains constant, with value equal to zero. We assume that the surface on which the ball is resting balances the interaction between the ball and the earth, and hence that the ball is essentially free of interactions. When the ball is hit, as in billiards, it momentarily suffers an interaction and gains velocity, but afterward is free again, moving in a straight line with the velocity it acquired when it was struck. If the ball is rigid and perfectly spherical, and the surface perfectly horizontal and smooth, we may

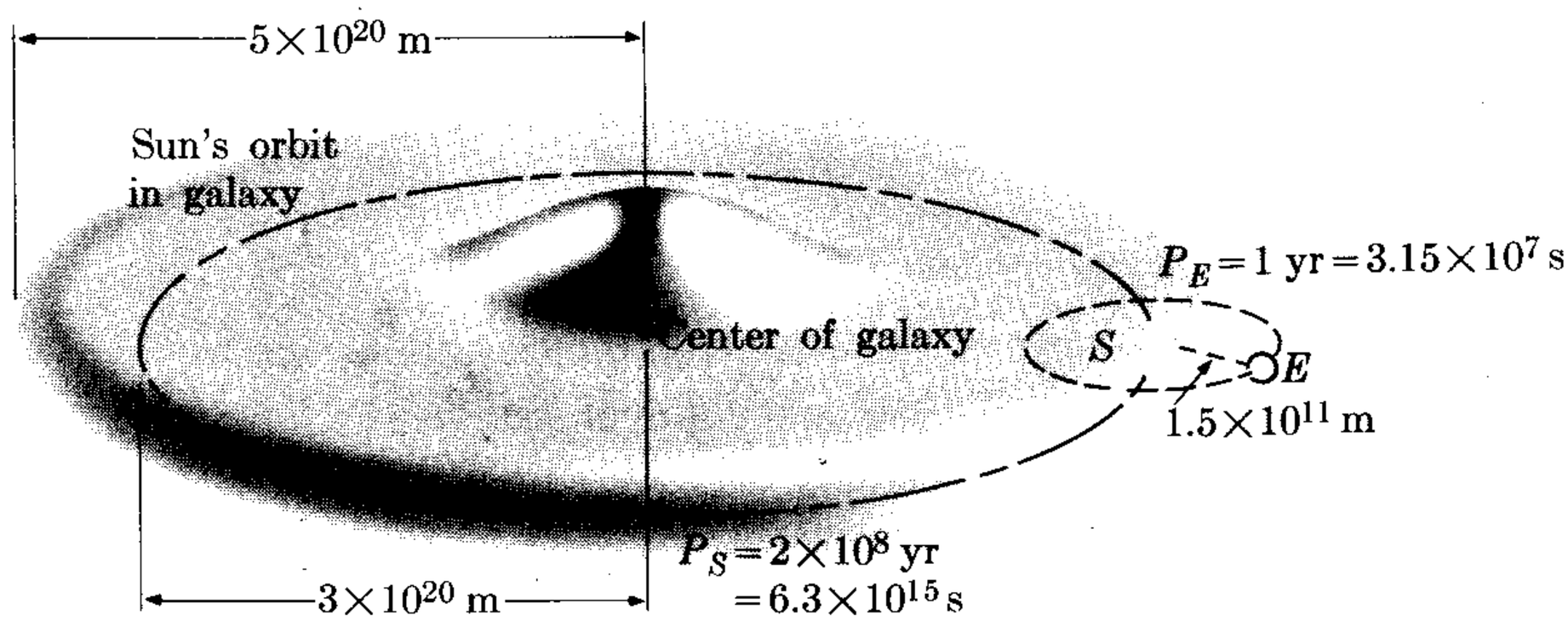

Fig. 7–1. A coordinate system attached to the earth is not inertial because of its daily rotation and its accelerated motion around the sun. Nor is the sun an inertial frame because of its motion about the center of the galaxy. However, for practical purposes, either of these two bodies may be used to define an inertial frame.

assume that the ball will continue moving that way indefinitely. In practice this is not the case, for the ball slows down and eventually stops. We say that there has been an additional interaction between the ball and the surface. This interaction, called *friction,* will be discussed later.

7.3 Linear Momentum

In Section 2.3 we gave an operational definition of *mass* by saying that it is a number we attach to each particle or body and that it is obtained by comparing the body with a standard body, using the principle of an equal arm balance. Mass, therefore, is a coefficient that distinguishes one particle from another. Our operational definition of mass gives us its value, assuming that the particle is at rest. However, we do not know from that definition whether the mass will be the same when the particle is in motion; therefore, to be precise, we should use the term *rest mass.* But let us assume, for the time being, that the mass is independent of the state of motion and call it simply mass. Later on, in Chapter 11, we shall make a more careful analysis of this important aspect and verify that our assumption is a good approximation so long as the velocity of the particle is very small compared with the velocity of light.

The *linear momentum* of a particle is defined as the product of its mass and its velocity. Designating it by $\boldsymbol{p}$, we write

$$\boldsymbol{p} = m\boldsymbol{v}. \tag{7.1}$$

Linear momentum is a vector quantity, and it has the same direction as the velocity. It is a very important physical concept because it combines the two elements that characterize the dynamical state of a particle: its mass and its velocity. Henceforth we shall write the word *momentum* instead of "linear momentum." In the MKSC system, momentum is expressed in m kg s^{-1} (no special name has been given to this unit).

That momentum is a more informative dynamical quantity than velocity alone can be seen from several simple experiments. For example, a loaded truck in motion is more difficult to stop or to speed up than an empty one, even if the velocity is the same for each, because the momentum of the loaded one is greater.

We may now restate the law of inertia by saying that

a free particle always moves with constant momentum.

7.4 Principle of Conservation of Momentum

One immediate consequence of the law of inertia is that an inertial observer recognizes that a particle is not free (i.e., that it is interacting with other particles) when he observes that the velocity or the momentum of the particle fails to remain constant; or in other words, when the particle experiences an acceleration.

Let us now consider an ideal situation. Suppose that, instead of observing one isolated particle in the universe, as assumed in the law of inertia, we observe two particles which are subject only to their mutual interaction and are otherwise

isolated from the rest of the world. As a result of their interaction, their individual velocities are not constant but change with time, and their paths in general are curved, as indicated in Fig. 7–2 by curves (1) and (2). At a particular time t, particle 1 is at A with velocity $\boldsymbol{v}_1$ and particle 2 is at B with velocity $\boldsymbol{v}_2$. At a later time t', the particles are at A' and B' with velocities $\boldsymbol{v}_1'$ and $\boldsymbol{v}_2'$, respectively. Denoting the masses of the particles by m_1 and m_2, we say that the total momentum of the system at time t is

$$\boldsymbol{P} = \boldsymbol{p}_1 + \boldsymbol{p}_2 = m_1\boldsymbol{v}_1 + m_2\boldsymbol{v}_2. \tag{7.2}$$

At a later time t', the total momentum of the system is

$$\boldsymbol{P}' = \boldsymbol{p}_1' + \boldsymbol{p}_2' = m_1\boldsymbol{v}_1' + m_2\boldsymbol{v}_2'. \tag{7.3}$$

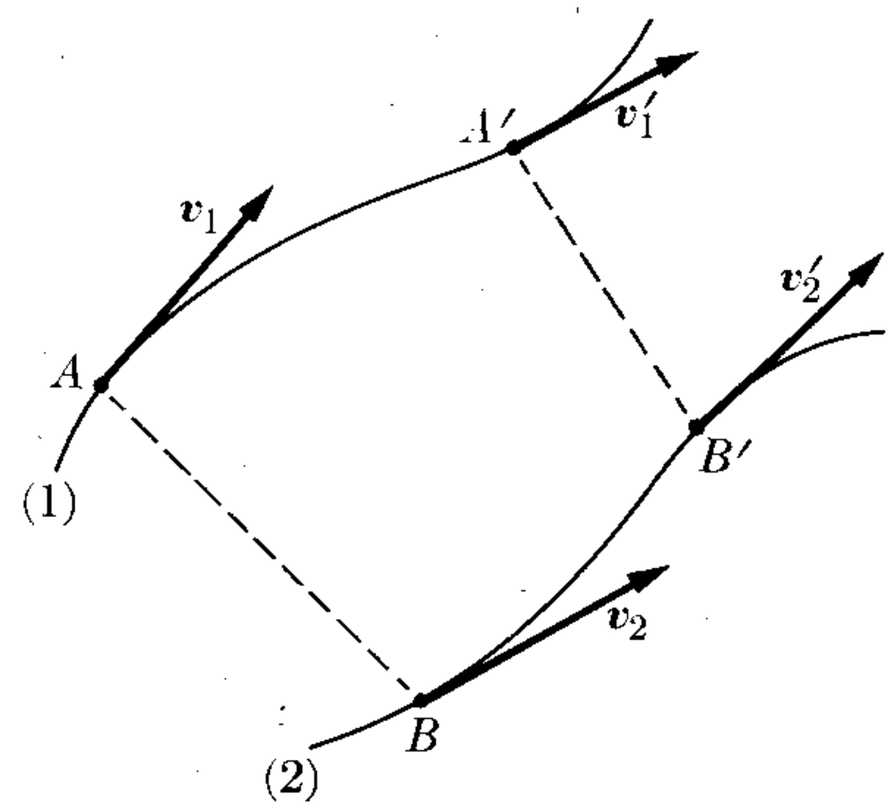

Fig. 7–2. Interaction between two particles.

In writing this equation we have maintained our assumption that the masses of the particles are independent of their states of motion; thus we have used the same masses as in Eq. (7.2). Otherwise we would have to write $\boldsymbol{P}' = m_1'\boldsymbol{v}_1' + m_2'\boldsymbol{v}_2'$. The important result of our experiment is that no matter what the times t and t' are, we always find, as a result of our observation, that $\boldsymbol{P} = \boldsymbol{P}'$. In other words,

> *the total momentum of a system composed of two particles which are subject only to their mutual interaction remains constant.*

This result constitutes the *principle of the conservation of momentum*, one of the most fundamental and universal principles of physics. For example, consider a hydrogen atom, composed of an electron revolving around a proton, and let us assume that it is isolated so that only the interaction between the electron and the proton has to be considered. Then the sum of the momenta of the electron and the proton relative to an inertial frame of reference is constant. Similarly, consider the system composed of the earth and the moon. If it were possible to neglect the interactions due to the sun and the other bodies of the planetary system, then the sum of the momenta of the earth and the moon, relative to an inertial frame of reference, would be constant.

Although the above-stated principle of the conservation of momentum considers only two particles, this principle holds also for any number of particles forming an isolated system; i.e., particles which are subject only to their own mutual interactions and not to interactions with other parts of the world. Therefore, the principle of conservation of momentum in its general form says that

> *the total momentum of an isolated system of particles is constant.*

For example, consider a hydrogen molecule composed of two hydrogen atoms (therefore of two electrons and two protons). If the molecule is isolated, so that only the interactions among these four particles have to be considered, the sum of their momenta relative to an inertial frame of reference will be constant. Similarly, consider our planetary system, composed of the sun, the planets, and their satellites. If we could neglect the interactions with all other heavenly bodies, the total momentum of the planetary system relative to an inertial frame of reference would be constant.

No exceptions to this general principle of conservation of momentum are known. In fact, whenever this principle seems to be violated in an experiment, the physicist immediately looks for some unknown or hidden particle which he has failed to notice and which may be responsible for the apparent lack of conservation of momentum. It is this search which has led physicists to identify the neutron, the neutrino, the photon, and many other elementary particles. Later on we shall have to reformulate the principle of conservation of momentum in a slightly different way; but for the great majority of the problems we shall discuss, we may use it in the form in which it has been stated here.

The conservation of momentum may be expressed mathematically by writing the following equation:

$$\boldsymbol{P} = \sum_i \boldsymbol{p}_i = \boldsymbol{p}_1 + \boldsymbol{p}_2 + \boldsymbol{p}_3 + \cdots = \text{const}, \tag{7.4}$$

which implies that, in an isolated system, the change of momentum of a particle during a particular interval of time is equal to the negative of the change of momentum of the rest of the system during the same time interval. So, for example, in the case of an isolated hydrogen molecule, the change of momentum of one of the electrons is equal and opposite to the sum of the changes of momenta of the other electron and the two protons.

For the particular case of two particles,

$$\boldsymbol{p}_1 + \boldsymbol{p}_2 = \text{const} \tag{7.5}$$

or

$$\boldsymbol{p}_1 + \boldsymbol{p}_2 = \boldsymbol{p}'_1 + \boldsymbol{p}'_2. \tag{7.6}$$

Note, from Eq. (7.6), that

$$\begin{aligned} \boldsymbol{p}'_1 - \boldsymbol{p}_1 &= \boldsymbol{p}_2 - \boldsymbol{p}'_2 \\ &= -(\boldsymbol{p}'_2 - \boldsymbol{p}_2). \end{aligned} \tag{7.7}$$

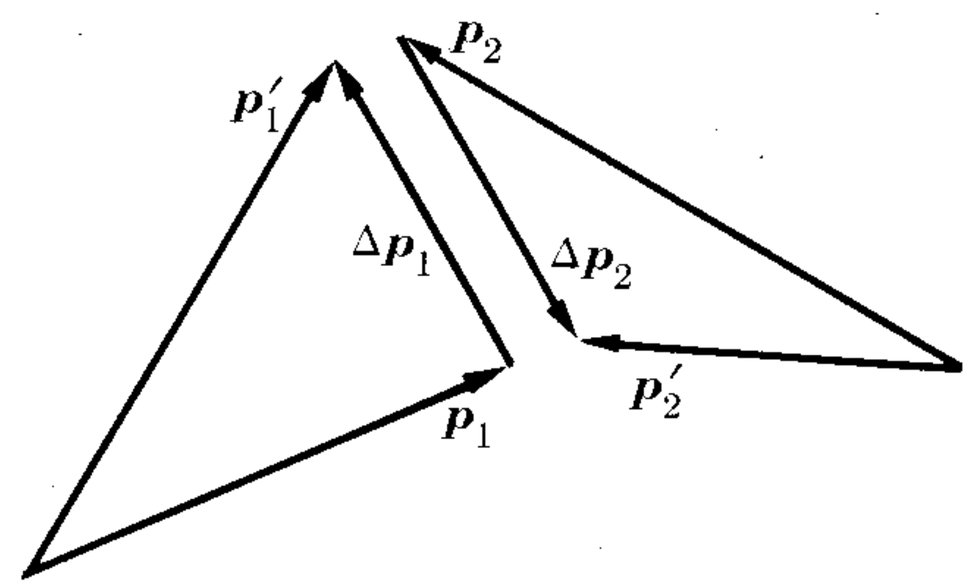

Fig. 7–3. Momentum exchange as a result of the interaction between two particles.

Or, calling $\boldsymbol{p}' - \boldsymbol{p} = \Delta\boldsymbol{p}$ the change in momentum between times t and t', we can write

$$\Delta\boldsymbol{p}_1 = -\Delta\boldsymbol{p}_2. \tag{7.8}$$

This result indicates that, for two interacting particles, the change in momentum of one particle in a certain time interval is equal and opposite to the change in

momentum of the other during the same time interval (Fig. 7–3). Thus the above result may also be expressed by saying that

an interaction produces an exchange of momentum,

so that the momentum "lost" by one of the interacting particles is equal to the momentum "gained" by the other particle.

The law of inertia stated in Section 7.2 is just one particular case of the principle of conservation of momentum. Because if we have only one isolated particle instead of several, Eq. (7.4) has only one term and becomes $\boldsymbol{p}$ = const or its equivalent, $\boldsymbol{v}$ = const, which is the law of inertia.

We continually find around us examples of the principle of conservation of momentum. The recoil of a firearm is one. Initially the system of gun plus bullet is at rest, and the total momentum is zero. When the gun is fired, it recoils to compensate for the forward momentum gained by the bullet. When a nucleus disintegrates, emitting (for example) an electron and a neutrino, the total momentum of the electron, the neutrino, and the resultant nucleus must add to zero, since initially the system was at rest with respect to an inertial frame attached to the laboratory. Similarly, if a grenade or bomb explodes in flight, the total momentum of all the fragments immediately after the explosion must add to a value equal to the momentum of the grenade immediately before exploding (Fig. 7–4).

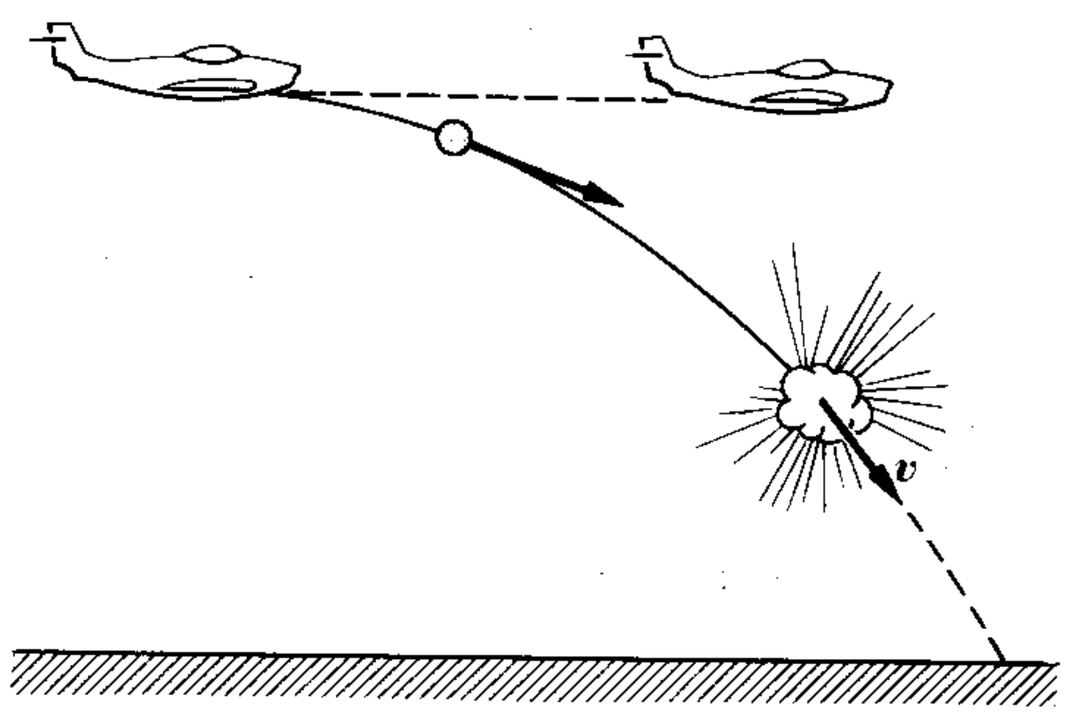

Fig. 7–4. Momentum is conserved in the explosion of a grenade.

EXAMPLE 7.1. A gun whose mass is 0.80 kg fires a bullet whose mass is 0.016 kg with a velocity of 700 m s^{-1}. Compute the velocity of the gun's recoil.

Solution: Initially both the gun and the bullet are at rest and their total momentum is zero. After the explosion the bullet is moving forward with a momentum

$$p_1 = m_1 v_1 = (0.016 \text{ kg}) \times (700 \text{ m s}^{-1}) = 11.20 \text{ m kg s}^{-1}.$$

The gun must then recoil with an equal but opposite momentum. Therefore we must have also

$$p_2 = 11.20 \text{ m kg s}^{-1} = m_2 v_2$$

or, since $m_2 = 0.80$ kg,

$$v_2 = \frac{11.20 \text{ m kg s}^{-1}}{0.80 \text{ kg}} = 14.0 \text{ m s}^{-1}.$$

EXAMPLE 7.2. Analysis of conservation of momentum in interactions between atomic particles.

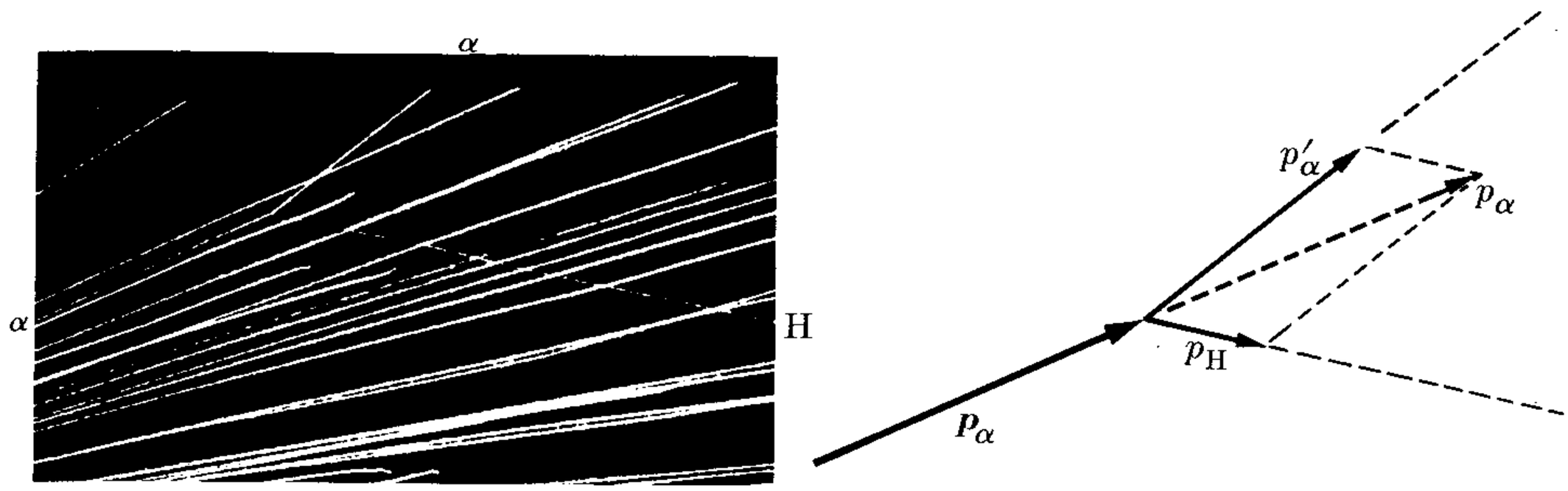

Fig. 7–5. Momentum conservation in the collision of an α-particle (helium nucleus) and a proton (hydrogen nucleus).

Solution: The cloud-chamber photograph in Fig. 7–5(a) shows an incoming alpha particle (or helium nucleus) interacting with an atom of hydrogen which was initially at rest, and which was part of the gas in the chamber. The alpha particle is deflected from its original direction and the atom of hydrogen is set in motion. If we know the respective masses, which in this case are in the ratio of 4 to 1, and measure their velocities (by special techniques devised to analyze cloud-chamber photographs), we can draw the momentum diagram of Fig. 7–5(b). When, after the interaction, the two momenta are added, the result is equal to the momentum of the incoming alpha particle; that is, $\boldsymbol{p}_\alpha = \boldsymbol{p}'_\alpha + \boldsymbol{p}_H$. So far conservation of momentum has been observed to hold in all atomic and nuclear interactions.

7.5 Redefinition of Mass

Using definition (7.1) of momentum, and assuming that the mass of a particle is constant, we may express the change in momentum of the particle in a time Δt as

$$\Delta \boldsymbol{p} = \Delta(m\boldsymbol{v}) = m\,\Delta \boldsymbol{v}.$$

Hence Eq. (7.8) reads $m_1\,\Delta \boldsymbol{v}_1 = -m_2\,\Delta \boldsymbol{v}_2$ or, considering only the magnitudes, we have

$$\frac{m_2}{m_1} = \frac{|\Delta \boldsymbol{v}_1|}{|\Delta \boldsymbol{v}_2|}, \tag{7.9}$$

which indicates that the ratio of the masses of the particles is inversely proportional to the magnitude of the changes of velocity. This result allows us to define mass dynamically. In fact, if particle 1 is our "standard" particle, its mass m_1 may be defined as unity. By letting any other particle—let us call it 2—interact with the standard particle and applying Eq. (7.9), we may obtain its mass m_2. This result indicates that our previous operational definition of mass in Section 2.3 can be replaced by this new operational definition, derived from the principle of conservation of momentum and the assumption that mass does not change with velocity.

7.6 Newton's Second and Third Laws; Concept of Force

In many cases we observe the motion of only one particle, either because we have no way of observing the other particles with which it interacts or because we purposely ignore them. In this situation it is rather difficult to use the principle of conservation of momentum. However, there is a practical way of circumventing this difficulty, by introducing the concept of *force*. The corresponding mathematical theory is called *dynamics of a particle.*

Equation (7.8) relates the changes in momentum of particles 1 and 2 during the time interval $\Delta t = t' - t$. Dividing both sides of this equation by Δt, we may write

$$\frac{\Delta \boldsymbol{p}_1}{\Delta t} = -\frac{\Delta \boldsymbol{p}_2}{\Delta t}, \tag{7.10}$$

which indicates that the average rates of (vector) change of momentum of the particles in a time interval Δt are equal in magnitude and opposite in direction. If we make Δt very small, i.e., if we find the limit of Eq. (7.10) as $\Delta t \to 0$, we get

$$\frac{d\boldsymbol{p}_1}{dt} = -\frac{d\boldsymbol{p}_2}{dt}, \tag{7.11}$$

so that the instantaneous rates of (vector) change of momentum of the particles, at any time t, are equal and opposite. Thus, using our previous examples, we can see that the rate of change of momentum of the electron in an isolated hydrogen atom is equal and opposite to the rate of change of momentum of the proton. Or, if we assume that the earth and the moon constitute an isolated system, the rate of change of momentum of the earth is equal and opposite to the rate of change of momentum of the moon.

We shall designate the time rate of change of momentum of a particle by the name "force." That is, the force "acting" on a particle is

$$\boldsymbol{F} = \frac{d\boldsymbol{p}}{dt}. \tag{7.12}$$

The word "acting" is somewhat misleading because it suggests the idea of something applied to the particle. Force is a mathematical concept which, by definition, is equal to the time rate of change of momentum of a given particle, which in turn is due to the interaction of the particle with other particles. Therefore, physically, we may consider force as an expression of an interaction. If the particle is free, $\boldsymbol{p} = \text{const}$ and $\boldsymbol{F} = d\boldsymbol{p}/dt = 0$. Hence we can say that no force acts on a free particle.

Expression (7.12) is *Newton's second law of motion;* but, as we can see, it is more a definition than a law, and is a direct consequence of the principle of conservation of momentum.

Using the concept of force, we can write Eq. (7.11) in the form

$$\boldsymbol{F}_1 = -\boldsymbol{F}_2, \tag{7.13}$$

where $\boldsymbol{F}_1 = d\boldsymbol{p}_1/dt$ is the force on particle 1 due to its interaction with particle 2 and $\boldsymbol{F}_2 = d\boldsymbol{p}_2/dt$ is the force on particle 2 due to its interaction with particle 1. Then we conclude that

> *when two particles interact, the force on one particle is equal and opposite to the force on the other.*

This is *Newton's third law of motion,* again a consequence of the definition of force and the principle of the conservation of momentum. It is sometimes called the *law of action and reaction.*

In numerous problems $\boldsymbol{F}_1$ (and of course also $\boldsymbol{F}_2$) can be expressed as a function of the relative position vector of the two particles, $\boldsymbol{r}_{12}$, and perhaps also as a function of their relative velocity. According to Eq. (7.9), if m_2 is very massive compared with m_1, the change in velocity of m_2 is very small compared with that of m_1, and we may assume that particle 2 remains practically at rest in some inertial frame of reference. Then we may speak of the motion of particle 1 under the action of the force $\boldsymbol{F}_1$ (Fig. 7–6), and $\boldsymbol{F}_1$ can be considered as a function of the position or the velocity of m_1 only. It is in these cases that Eq. (7.12) is particularly useful. For example, this is the case for terrestrial bodies moving under the gravitational action of the earth, or an electron moving relative to a nucleus in an atom.

The determination of $\boldsymbol{F}(\boldsymbol{r}_{12})$ for the many interactions found in nature is one of the most important problems of physics. It is precisely because the physicist has been able to associate specific functional forms of $\boldsymbol{F}(\boldsymbol{r}_{12})$ with different interactions observed in nature that the concept of force has been so useful to him.

Remembering the definition (7.1) of momentum, we may write Eq. (7.12) in the form

$$\boldsymbol{F} = \frac{d(m\boldsymbol{v})}{dt}, \tag{7.14}$$

and if m is constant, we have

$$\boldsymbol{F} = m\frac{d\boldsymbol{v}}{dt} \qquad \text{or} \qquad \boldsymbol{F} = m\boldsymbol{a}. \tag{7.15}$$

We may express Eq. (7.15) in words by saying:

> *Force is equal to mass times acceleration, if the mass is constant.*

Note that in this case the force has the same direction as the acceleration. From Eq. (7.15) we see that if the force is constant, the acceleration, $\boldsymbol{a} = \boldsymbol{F}/m$, is also constant and the motion is uniformly accelerated. This is what happens to bodies falling near the earth's surface: All bodies fall toward the earth with the same acceleration $\boldsymbol{g}$, and thus the force of gravitational attraction of the earth, called *weight,* is

$$\boldsymbol{W} = m\boldsymbol{g}. \tag{7.16}$$

(Strictly speaking, we should write $\boldsymbol{W} = m\boldsymbol{g}_0$, where $\boldsymbol{g}$ and $\boldsymbol{g}_0$ are related by Eq. 6.27.)

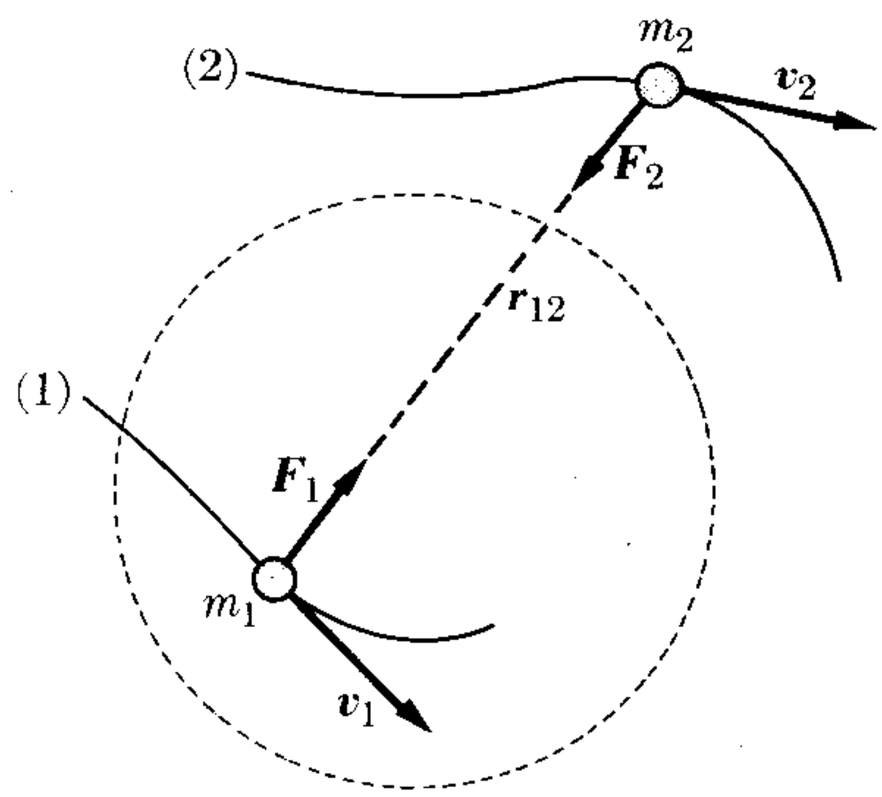

Fig. 7–6. As a result of momentum conservation, action and reaction are equal and opposite.

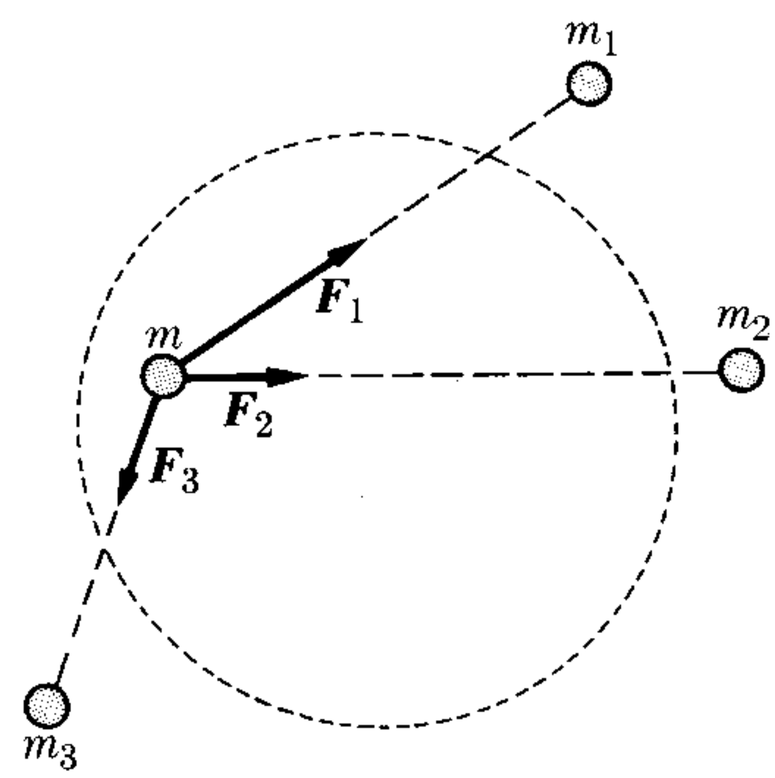

Fig. 7–7. Resultant force on the particle.

In writing Eq. (7.12) we have assumed that the particle interacts with only one other particle, as follows from the discussion preceding Eq. (7.12), and illustrated in Fig. 7–6. However, if particle m interacts with particles $m_1, m_2, m_3, \ldots$ (Fig. 7–7), each one produces a change in the momentum of m that is characterized by the respective forces $\boldsymbol{F}_1$, $\boldsymbol{F}_2$, $\boldsymbol{F}_3$, . . . , according to Eq. (7.12). Then the *total* rate of change of momentum of particle m is

$$\frac{d\boldsymbol{p}}{dt} = \boldsymbol{F}_1 + \boldsymbol{F}_2 + \boldsymbol{F}_3 + \cdots = \boldsymbol{F}.$$

The vector sum on the right-hand side is called the *resultant* force $\boldsymbol{F}$ acting on m. This rule for computing the resultant force has already been applied in Chapter 4. In Fig. 7–7 we have not indicated the possible interactions between m_1 and m_2, m_1 and m_3, m_2 and m_3, etc., because these interactions are irrelevant to our present purpose. Also we have implicitly assumed that the interaction between m and m_1, for example, is not altered by the presence of m_3, m_4, . . . ; in other words, we have assumed that there are no interference effects.

In succeeding sections of this chapter, in which we shall discuss the motion of a particle, we shall assume that the resultant force $\boldsymbol{F}$ is a function of the coordinates of the particle only, thus ignoring the motion of the other particles with which it interacts. This very useful approximation, as we said before, constitutes what is known as the *dynamics of a particle*. In later chapters we shall consider the motions of systems of particles and the forces associated with the different interactions known to the physicist.

7.7 Critique of the Concept of Force

Let us now present a critical appraisal of the concept of force. We introduced this concept (that is, $\boldsymbol{F} = d\boldsymbol{p}/dt$) in Eq. (7.12) as a mathematical concept which is convenient for describing the rate of change of the momentum of a particle due to its interactions with other particles. However, in daily life we have a somewhat dif-

ferent image of the concept of force. We "feel" a force (actually an interaction) when a batter hits a ball, a hammer drives a nail, a boxer jabs at the face of his opponent, or a weight pulls on a string. And obviously it is difficult to reconcile this sensory image of force with the force or interaction between the sun and the earth. In both cases, however, we have an interaction between two bodies. The student may say: yes, but there is a very large distance between the sun and the earth, while the batter "touches" the ball. And this is precisely the point at which things are not so different as they may seem. No matter how compact a solid may appear, its atoms are all separated and held in position by interactions in the same way that the planets are held in position as a result of their interactions with the sun. The bat is never in contact with the ball in the microscopic sense, although its molecules do come very close to those of the ball, producing a temporary disturbance in their arrangement as a result of their interactions. Thus all forces in nature correspond to interactions between bodies a certain distance apart. In some cases the distance is so small by human standards that we tend to extrapolate and think it is zero. In other cases the distance is very large by human standards. However, from the physical point of view, there is no essential difference in the two kinds of forces. Hence we must apply such sensory or macroscopic concepts as "contact" very carefully when we are dealing with processes on an atomic scale.

The fact that two particles interact when they are separated a certain distance means that we must consider a mechanism for the transmission of the interaction. This mechanism will be considered in later chapters; we shall only state here that our discussion will require a revision of Eq. (7.5). In the form in which it is written, Eq. (7.5) presumes that the interaction between two particles is instantaneous. However, interactions propagate with a finite velocity presumably equal to that of light, as will be discussed in later chapters. In order to take into account the retardation in the interaction due to the finite velocity of propagation, an additional term will have to be incorporated into Eq. (7.5). When this is done, the concept of force passes into a secondary role and the law of action and reaction loses its meaning. However, so long as the particles move very slowly compared with the velocity of light, or interact very weakly, Eq. (7.5) and the theory developed from it constitute an excellent approximation for describing the physical situation.

7.8 Units of Force

From Eqs. (7.12) or (7.15), we see that the unit of force must be expressed in terms of the units of mass and acceleration. Thus in the MKSC system the force is measured in m kg s^{-2}, a unit that is called a *newton* and is denoted by N; that is, N = m kg s^{-2}. Accordingly, we define the newton as the force that is applied to a body whose mass is one kg to produce an acceleration of 1 m s^{-2}.

Still in frequent use is the cgs unit of force called a *dyne*, and defined as the force applied to a body whose mass is one gram, to produce an acceleration of 1 cm s^{-2}; that is, dyne = cm g s^{-2}. Noting that 1 kg = 10^3 g and 1 m = 10^2 cm, we see that N = m kg s^{-2} = $(10^2 \text{ cm})(10^3 \text{ g})\ s^{-2} = 10^5$ dynes.

The British unit of force, very seldom used, is the *poundal*, defined as the force acting on a body whose mass is one pound and whose acceleration is 1 ft s^{-2}, and abbreviated pdl; that is, poundal = ft lb s^{-2}. Recalling that 1 lb = 0.4536 kg and that 1 ft = 0.3048 m, we may write poundal = (0.3048 m)(0.4536 kg) s^{-2} = 0.1383 N.

Two other units are used frequently by engineers. They are based on Eq. (7.16), which defines the weight of a body. One is the *kilogram force*, abbreviated kgf, defined as a force equal to the weight of a mass equal to one kilogram. Thus, setting $m = 1$ kg in Eq. (7.16), we have kgf = g N $\simeq$ 9.807 N. Similarly the *pound force*, abbreviated lbf, is defined as a force equal to the weight of a mass equal to one pound. Thus, setting $m = 1$ lb in Eq. (7.16), we have lbf = g pdl $\simeq$ 32.17 pdl = 4.448 N.

Note that mass measured in kilograms or pounds and weight measured in kilograms force or pounds force are expressed by the same number. So a mass of 7.24 lb weighs 7.24 lbf or 238.7 poundals. The introduction of kgf and lbf for measuring forces requires the definition of new units of mass if we want to use these units of force in conjunction with the equation of motion $F = ma$. For example, in the British system we would have that

$$\text{lbf} = (\text{new mass unit}) \times (\text{ft s}^{-2}).$$

Calling the new mass unit a *slug*, we see that

$$\text{slug} = \frac{\text{lbf}}{\text{ft s}^{-2}} = \frac{32.17 \text{ pdl}}{\text{ft s}^{-2}} = 32.17 \text{ lb},$$

or 1 lb = 0.0311 slug. A slug is thus the mass of a body whose acceleration is 1 ft s^{-2} when acted on by a force of 1 lbf.

Although weight, being a force, should be expressed in N or poundals, it is customary, especially in engineering and household uses, to express it in kilograms force or pounds force. In practice, however, one speaks of a force of so many pounds and not pounds force.

EXAMPLE 7.3. An automobile whose mass is 1000 kg moves uphill along a street inclined 20°. Determine the force which the motor must produce if the car is to move (a) with uniform motion, (b) with an acceleration of 0.2 m s^{-2}. Find also in each case the force exerted on the automobile by the street.

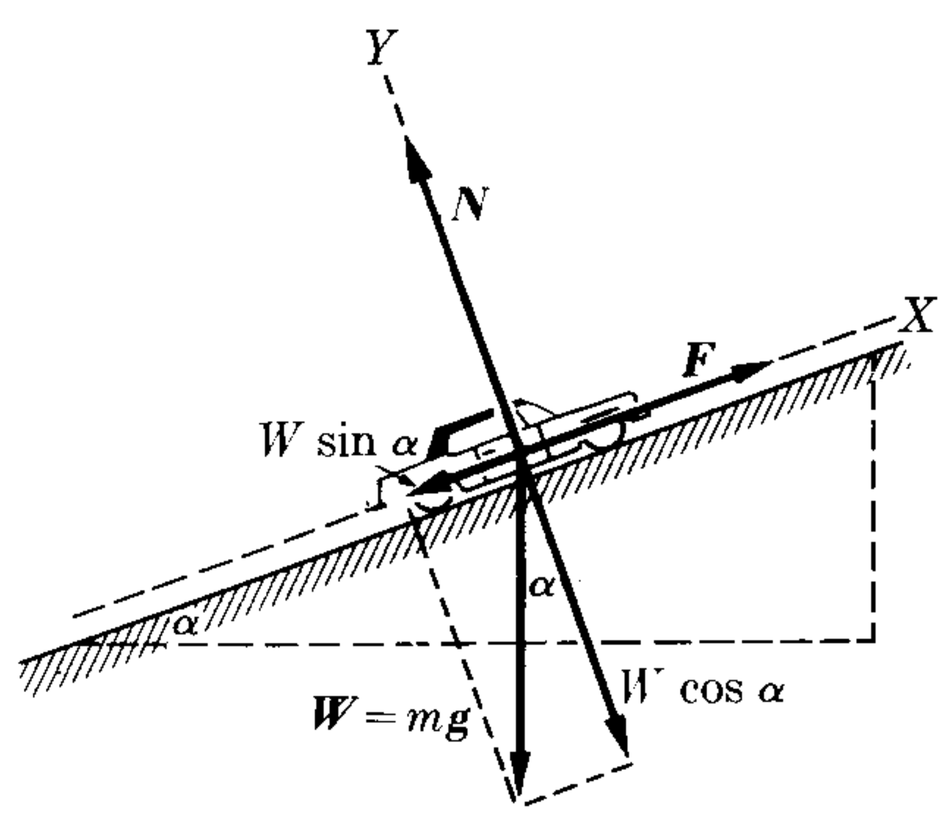

Figure 7–8

Solution: We designate the mass of the automobile by m; the forces acting on it are illustrated in Fig. 7–8. They are its weight $\boldsymbol{W} = m\boldsymbol{g}$, pointing downward, the force $\boldsymbol{F}$ due to the motor, pointing uphill, and the force $\boldsymbol{N}$ due to the street and perpendicular to it. Using a set of axes as indi-

cated in the figure, and employing Eq. (7.15), we find that the motion along the X-direction satisfies the equation

$$F - mg \sin \alpha = ma \qquad \text{or} \qquad F = m(a + g \sin \alpha).$$

The car has no motion along the Y-axis, and thus

$$N - mg \cos \alpha = 0 \qquad \text{or} \qquad N = mg \cos \alpha.$$

We note that the force N due to the street is independent of the acceleration of the car and, to introduce numerical values, is equal to 9210 N. But the force F due to the motor does depend on the acceleration of the car. When the car moves with uniform motion, $a = 0$ and $F = mg \sin \alpha$; in our example it is 3350 N. When it moves with the acceleration of 0.2 m s^{-2}, then $F = 3550$ N.

We suggest that the student solve the problem again, this time for a car moving downhill.

EXAMPLE 7.4. Determine the acceleration with which the masses m and m' of Fig. 7–9 move. Assume that the wheel can rotate freely around O and disregard any possible effects due to the mass of the wheel (these effects will be considered later, in Chapter 10).

Solution: Let us assume that the motion is in the direction shown by the arrow, so that mass m is falling and mass m' rising. Both masses move with the same acceleration a if the string is inextensible, as we may assume. The masses interact through the string, the equal and opposite forces they exert on each other being designated by F. Then the downward motion of m with acceleration a is $mg - F = ma$, and the upward motion of m' with the same acceleration a is $F - m'g = m'a$.

Thus, by adding the two equations, we eliminate F, and obtain

$$a = \frac{m - m'}{m + m'} g$$

for their common acceleration. Then the tension in the string is

$$F = \frac{2mm'}{m + m'} g.$$

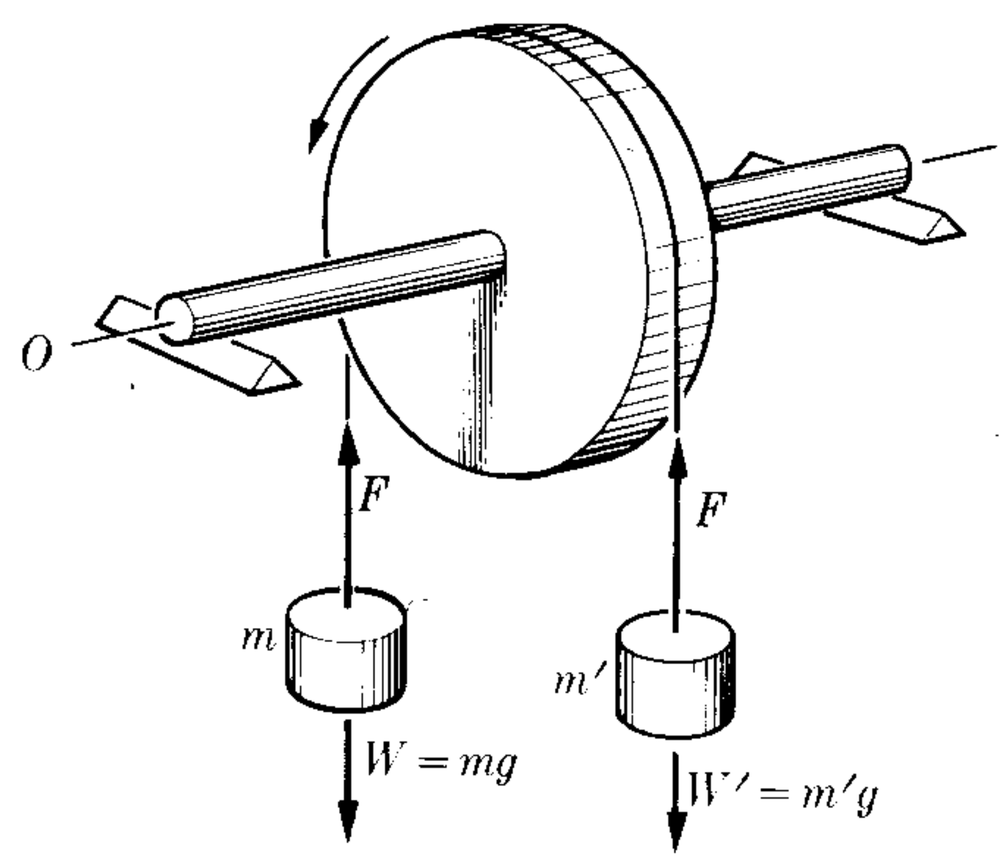

Figure 7–9

A device similar to the arrangement of Fig. 7–9, and which is called *Atwood's machine*, is sometimes used to study the laws of uniformly accelerated motion. One advantage of using it is that, by setting m very close to m', we can make the acceleration a very small, which makes it easier to observe the motion.

EXAMPLE 7.5. A particle of mass 10 kg, subject to a force $F = (120t + 40)$ N, moves in a straight line. At time $t = 0$ the particle is at $x_0 = 5$ m, with a velocity $v_0 = 6$ m s^{-1}. Find its velocity and position at any later time.

Solution: Using Eq. (7.15), we obtain

$$120t + 40 = 10a \qquad \text{or} \qquad a = (12t + 4)\ \text{m s}^{-2}.$$

From now on we proceed as in Example 5.2. Since for rectilinear motion $a = dv/dt$,

$$\frac{dv}{dt} = 12t + 4.$$

Integrating, we have

$$\int_6^v dv = \int_0^t (12t + 4)\, dt \qquad \text{or} \qquad v = (6t^2 + 4t + 6)\ \text{m s}^{-1}.$$

Now, setting $v = dx/dt$ and integrating again, we have

$$\int_5^x dx = \int_0^t v\, dt = \int_0^t (6t^2 + 4t + 6)\, dt$$

or

$$x = (2t^3 + 2t^2 + 6t + 5)\ \text{m},$$

which allows us to find the position at any later time.

7.9 Frictional Forces

Whenever there are two bodies in contact, such as in the case of a book resting on a table, there is a resistance which opposes the relative motion of the two bodies. For example, suppose that we push the book along the table, giving it some velocity. After we release it, it slows down and eventually stops. This loss of momentum is indicative of a force opposing the motion; the force is called *sliding friction*. It is due to the interaction between the molecules of the two bodies, sometimes referred to as *cohesion* or *adhesion* depending on whether the two bodies are of the same or different materials. The phenomenon is rather complex and depends on many factors such as the condition and nature of the surfaces, the relative velocity, etc. We can experimentally verify that the force of friction $\boldsymbol{F}_f$ has a magnitude that, for most practical purposes, may be considered as proportional to the normal force $\boldsymbol{N}$ pressing one body against the other (Fig. 7–10). The constant of proportionality is called the *coefficient of friction*, and is designated by f. That is, in magnitude,

$$F_f = \text{sliding friction} = fN. \tag{7.17}$$

The force of sliding friction always opposes the motion of the body, and so has a direction opposite to the velocity. We can write Eq. (7.17) in vector form by recognizing

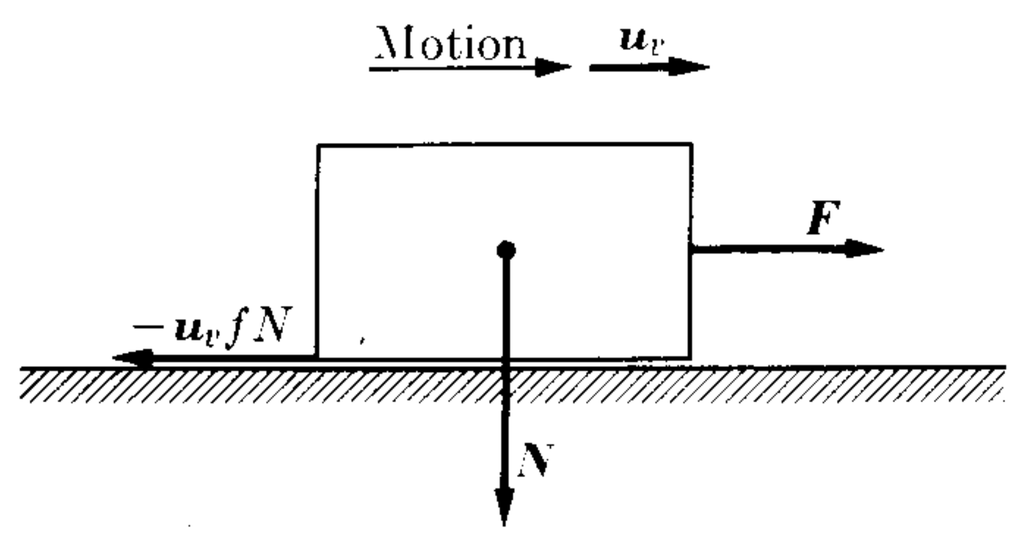

Fig. 7–10. The force of friction opposes the motion and depends on the normal force.

TABLE 7–1 Coefficients of Friction (All Surfaces Dry)*

Material	f_s	f_k
Steel on steel (hard)	0.78	0.42
Steel on steel (mild)	0.74	0.57
Lead on steel (mild)	0.95	0.95
Copper on steel (mild)	0.53	0.36
Nickel on nickel	1.10	0.53
Cast iron on cast iron	1.10	0.15
Teflon on Teflon (or on steel)	0.04	0.04

* These values must be considered as only average, since the coefficients of friction are macroscopic quantities that depend on microscopic properties of both materials, and fluctuate greatly.

that a unit vector in the direction of motion is obtained by dividing the velocity vector by the velocity magnitude, $\boldsymbol{u}_v = \boldsymbol{v}/v$. This allows us to write Eq. (7.17) in the vector form $\boldsymbol{F}_f = -\boldsymbol{u}_v fN$. For example, in the case of Fig. 7–10, if $\boldsymbol{F}$ is the applied force moving the body to the right (possibly a pull on an attached string), the resultant horizontal force to the right is $\boldsymbol{F} - \boldsymbol{u}_v fN$, and the equation of motion of the body, applying Eq. (7.15), is

$$m\boldsymbol{a} = \boldsymbol{F} - \boldsymbol{u}_v fN.$$

In general there are two kinds of coefficient of friction. The *static* coefficient of friction, f_s, when multiplied by the normal force, gives the minimum force required to set in relative motion two bodies that are initially in contact and at relative rest. The *kinetic* coefficient of friction, f_k, when multiplied by the normal force, gives the force required to maintain the two bodies in uniform relative motion. It has been found experimentally that f_s is larger than f_k for all materials so far tested. Table 7–1 lists representative values of f_s and f_k for several materials.

Friction is a statistical concept, since the force F_f represents the sum of a very large number of interactions between the molecules of the two bodies in contact. It is, of course, impossible to take into account the individual molecular interactions; hence they are determined in a collective way by some experimental method and represented approximately by the coefficient of friction.

In the following examples we illustrate how to handle dynamical problems involving friction between solids.

EXAMPLE 7.6. A body whose mass is 0.80 kg is on a plane inclined 30°. What force must be applied on the body so that it moves (a) uphill and (b) downhill? In both cases assume that the body moves with uniform motion and with an acceleration of 0.10 m s^{-2}. The coefficient of sliding friction with the plane is 0.30.

Solution: Let us first consider the body moving uphill. The forces acting on the body are illustrated in Fig. 7–11(a). They are the weight $W = mg$, pointing downward, the

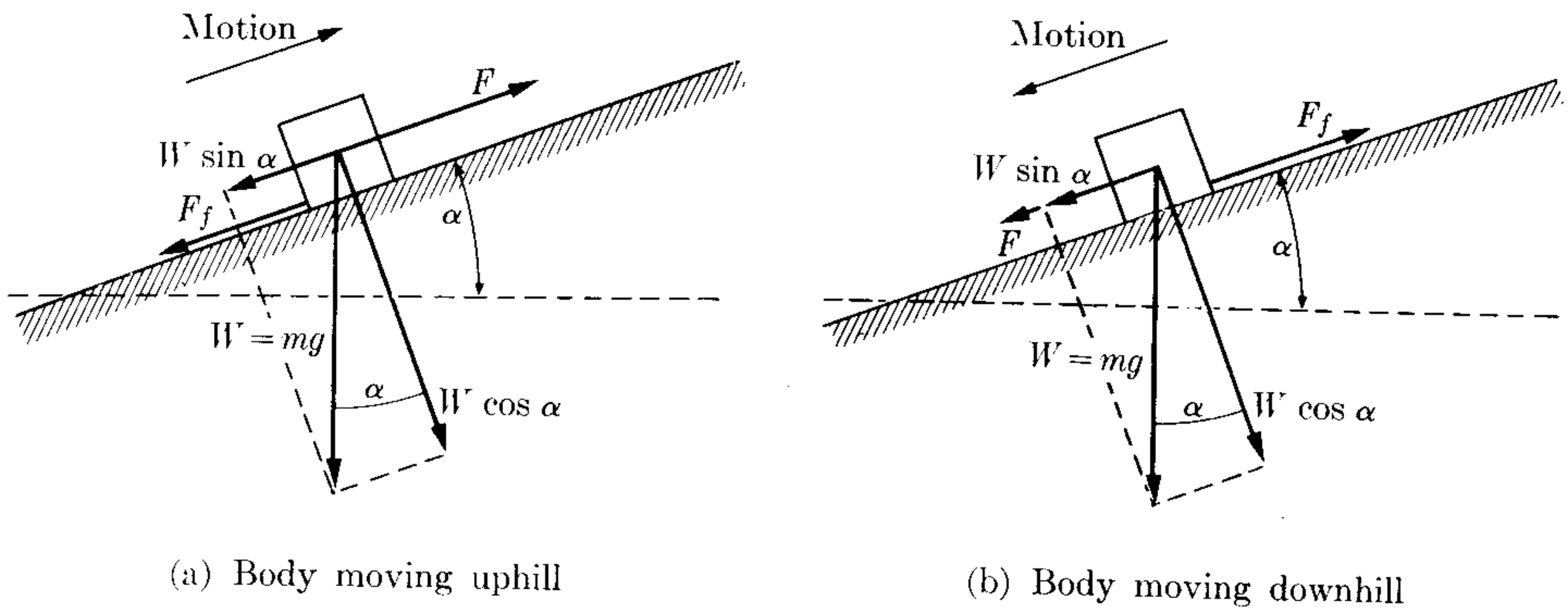

(a) Body moving uphill (b) Body moving downhill

Figure 7–11

applied force F (which we assume uphill), and the force of friction F_f, which is always *against* the motion and thus in this case must be downhill.* When we separate the weight into its component along the plane and its component perpendicular to the plane, the motion of the body along the plane, using Eq. (7.15), is

$$F - mg \sin \alpha - F_f = ma.$$

Now, according to Eq. (7.17), we must write $F_f = fN$. But from Fig. 7–11(a) we see that the normal force pressing the body against the plane is $mg \cos \alpha$. Thus $F_f = f\, mg \cos \alpha$. And the equation of motion becomes

$$F - mg (\sin \alpha + f \cos \alpha) = ma.$$

This equation serves two purposes. If we know the acceleration a, we can find the applied force F. Conversely, if we know the force F we can find the acceleration. In the first case we have

$$F = m[a + g (\sin \alpha + f \cos \alpha)].$$

For example, if the motion is uniform, $a = 0$, and when we insert the corresponding numerical values, $F = 5.95$ N. When the body is moving with an acceleration of 0.10 m s^{-2}, we obtain $F = 6.03$ m s^{-2}.

When the body moves downhill, the forces are as illustrated in Fig. 7–11(b). Now we have assumed that F is downhill, but we could also have made the opposite assumption. However, the force of friction F_f must be uphill to oppose the motion. Taking downhill as the positive direction, the student may verify that the equation of motion is now

$$F + mg (\sin \alpha - f \cos \alpha) = ma$$

or

$$F = m[a - g (\sin \alpha - f \cos \alpha)].$$

If the motion is uniform ($a = 0$), when we insert numerical values, we obtain $F = -1.88$ N, while if it slides down with an acceleration of 0.10 m s^{-2}, we get $F = -1.80$ N.

---

* Another force that has not been shown in the figure is the force exerted by the plane on the body. We need not consider this force in this problem.

The negative sign in each case means that the force F is uphill instead of downhill, as we had assumed.

We suggest that the student determine the motion of the body if no force F is applied, and in view of the result obtained, justify the negative sign for F obtained previously.

7.10 Frictional Forces in Fluids

When a body moves through a fluid, such as a gas or a liquid, at a relatively low velocity, the force of friction may be approximated by assuming that it is proportional to the velocity, and opposed to it. We therefore write

$$\boldsymbol{F}_f = \text{fluid friction} = -K\eta\boldsymbol{v}. \tag{7.18}$$

The coefficient K depends on the shape of the body. For example, in the case of a sphere of radius R, laborious calculation indicates that

$$K = 6\pi R, \tag{7.19}$$

a relation known as *Stokes' law*. The coefficient η depends on the internal friction of the fluid (i.e., the frictional force between different layers of the fluid moving with different velocities). This internal friction is also called *viscosity* and η is called the *coefficient of viscosity*.* The coefficient of viscosity in the MKSC system is expressed in $\mathrm{N\,s\,m^{-2}}$. This can be seen as follows. From Stokes' law, Eq. (7.19), we see that K is expressed in meters (the same applies to bodies of different shapes). Thus, according to Eq. (7.18), η must be expressed in $\mathrm{N/m(m\,s^{-1})}$, which is the same as the unit indicated above. Remembering that $\mathrm{N = m\,kg\,s^{-2}}$, we may also express viscosity in $\mathrm{m^{-1}\,kg\,s^{-1}}$. Viscosity may also be expressed in $\mathrm{cm^{-1}\,g\,s^{-1}}$, a unit called the *poise*, and abbreviated P. The poise is equal to one-tenth of the MKSC unit for viscosity, since

$$1\ \mathrm{m^{-1}\,kg\,s^{-1}} = (10^2\ \mathrm{cm})^{-1}\,(10^3\ \mathrm{g})\ \mathrm{s^{-1}} = 10\ \mathrm{cm^{-1}\,g\,s^{-1}} = 10\ \mathrm{P}.$$

The coefficient of viscosity of liquids decreases with an increase of temperature while, in the case of gases, the coefficient of viscosity increases with increasing temperature. Table 7–2 presents the coefficients of viscosity of several fluids.

When a body moves through a viscous fluid under the action of a force $\boldsymbol{F}$, the resultant force is $\boldsymbol{F} - K\eta\boldsymbol{v}$ and the equation of motion is

$$m\boldsymbol{a} = \boldsymbol{F} - K\eta\boldsymbol{v}. \tag{7.20}$$

Assuming the force $\boldsymbol{F}$ constant, the acceleration $\boldsymbol{a}$ produces a continuous increase in $\boldsymbol{v}$ and a corresponding increase in fluid friction, so that eventually the right-hand side becomes zero. At that moment the acceleration is also zero and there is no further increase in velocity, the fluid friction being exactly balanced by the applied

* In Chapter 24, a more general definition of coefficient of viscosity will be given.

TABLE 7–2 Coefficients of Viscosity, in Poises*

Liquids	$\eta \times 10^2$	Gases	$\eta \times 10^4$
Water (0°C)	1.792	Air (0°C)	1.71
Water	1.005	Air	1.81
Water (40°C)	0.656	Air (40°C)	1.90
Glycerine	833	Hydrogen	0.93
Castor oil	9.86	Ammonia	0.97
Alcohol	0.367	Carbon dioxide	1.46

* All at 20°C, except where noted.

force. The particle continues moving in the direction of the force with a constant velocity, called the *limiting* or *terminal velocity*, which is given by

$$\boldsymbol{v}_L = \frac{\boldsymbol{F}}{K\eta}. \tag{7.21}$$

Therefore the limiting velocity depends on η and K; that is, on the viscosity of the fluid and the shape of the body. In free fall under the influence of gravity, $\boldsymbol{F} = m\boldsymbol{g}$, and Eq. (7.21) becomes

$$\boldsymbol{v}_L = \frac{m\boldsymbol{g}}{K\eta}. \tag{7.22}$$

Equation (7.22) has to be corrected for the buoyant force exerted by the fluid, which, according to Archimedes' principle, is equal to the weight of the fluid displaced by the body. If m_f is the mass of fluid displaced by the body, its weight is $m_f\boldsymbol{g}$, so that the upward buoyant force is $\boldsymbol{B} = -m_f\boldsymbol{g}$, and the net downward force will be $m\boldsymbol{g} - m_f\boldsymbol{g} = (m - m_f)\boldsymbol{g}$. This yields, instead of Eq. (7.22),

$$\boldsymbol{v}_L = \frac{(m - m_f)\boldsymbol{g}}{K\eta}. \tag{7.23}$$

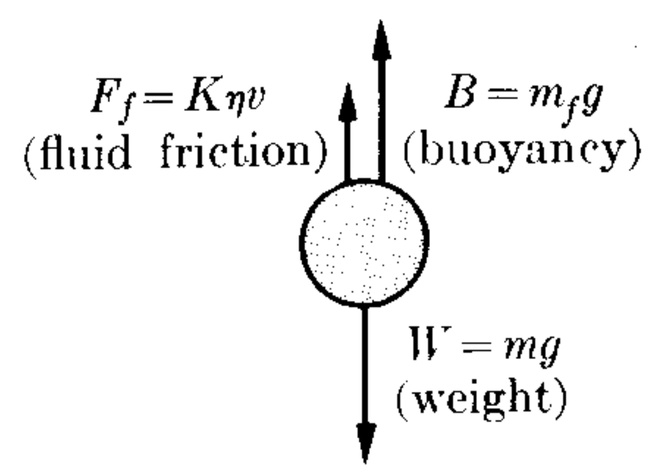

Fig. 7–12. Forces acting on a body falling through a fluid.

The three forces acting on the body in this case are illustrated in Fig. 7–12. For large bodies and large velocities, the fluid friction is proportional to a higher power of the velocity, and the discussion of the previous paragraphs is insufficient to describe physical events.

EXAMPLE 7.7. Find the limiting velocity of a raindrop. Assume a diameter of 10^{-3} m. The density of air relative to water is 1.30×10^{-3}.

Solution: Assuming that raindrops are spherical, of radius r, we find, using Eq. (1.1), that their masses are

$$m = \rho V = \tfrac{4}{3}\pi r^3 \rho,$$

where ρ is the density of water. Also if ρ_f is the density of the fluid (in this case air), we have that

$$m_f = \rho_f V = \tfrac{4}{3}\pi r^3 \rho_f,$$

so that

$$m - m_f = \tfrac{4}{3}\pi r^3(\rho - \rho_f).$$

Also, using Eq. (7.19), $K = 6\pi r$ because the drops are spherical. By applying Eq. (7.23), we find that the limiting velocity is given by

$$v_L = \frac{2(\rho - \rho_f)r^2 g}{9\eta}.$$

Substituting numerical values, including $\eta = 1.81 \times 10^{-5}$ N s m^{-2} and $\rho = 10^3$ kg m^{-3}, we find that $v_L = 30$ m s^{-1}, or about 107 km hr^{-1} or 66 mi hr^{-1}! A larger drop will *not* have a very different terminal velocity, due to the considerations mentioned in the paragraph previous to this example.

EXAMPLE 7.8. Obtain the velocity of a particle moving through a viscous fluid as a function of time, assuming that Eq. (7.20) holds with a constant force, and that the motion is in a straight line.

Solution: Since the motion is in a straight line, we may write Eq. (7.20) (remembering that $a = dv/dt$) as

$$m\frac{dv}{dt} = F - K\eta v,$$

so that

$$\frac{dv}{dt} = -\frac{K\eta}{m}\left(v - \frac{F}{K\eta}\right).$$

Separating variables and integrating, we have

$$\int_{v_0}^{v} \frac{dv}{v - F/K\eta} = -\frac{K\eta}{m}\int_0^t dt,$$

or

$$\ln\left(v - \frac{F}{K\eta}\right) - \ln\left(v_0 - \frac{F}{K\eta}\right) = -\frac{K\eta}{m}t.$$

Or, using Eq. (M.18), in which $\ln e^x = x$, we obtain

$$v = \frac{F}{K\eta} + \left(v_0 - \frac{F}{K\eta}\right)e^{-(K\eta/m)t}.$$

The second term decreases very rapidly, soon becoming negligible, so that the velocity becomes constant, and equal to $F/K\eta$, in agreement with Eq. (7.21). In other words, the terminal velocity is independent of the initial velocity. If $v_0 = 0$,

$$v = \frac{F}{K\eta}(1 - e^{-(K\eta/m)t}).$$

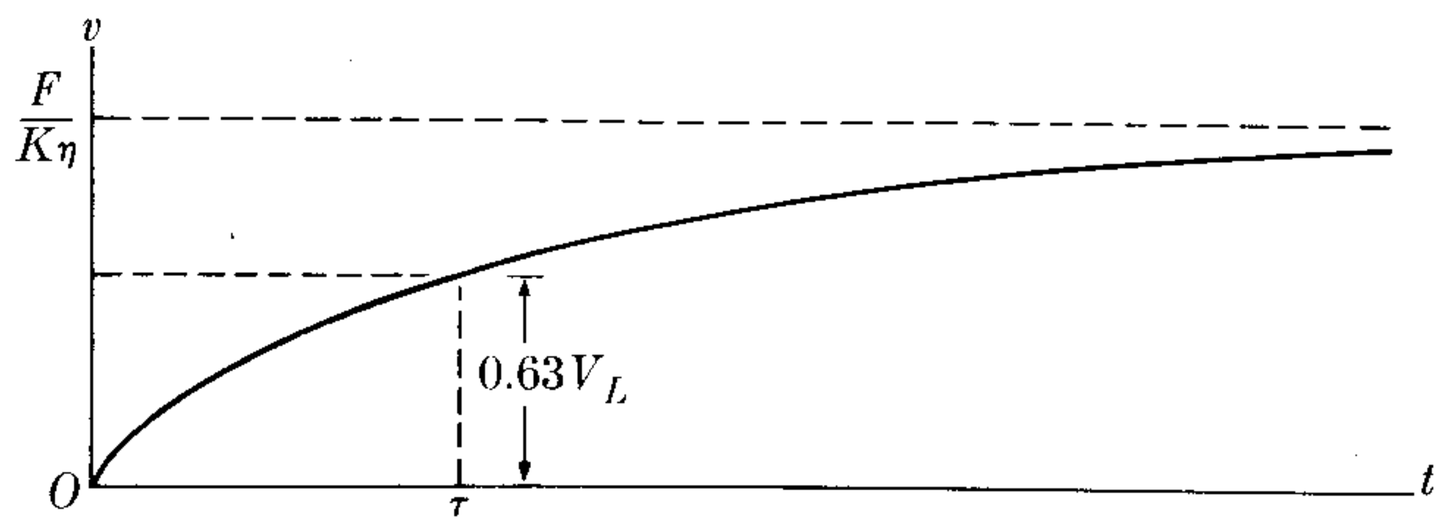

Fig. 7–13. Velocity as a function of time for a body falling through a viscous fluid.

The variation of v with t is illustrated in Fig. 7–13. The relaxation time is defined as $\tau = m/K\eta$. This is the time at which v is 63% of v_L, as the student may verify directly. We suggest that the student proceed one step further and, using the previous result for v, obtain by integration the distance moved in terms of the time. Also find the distance corresponding to the time τ.

7.11 Systems with Variable Mass

The great majority of systems we encounter in physics may be considered as having constant mass. However, in certain cases the mass is variable. The simplest example is that of a raindrop. While it falls, moisture may condense on its surface or water may evaporate, resulting in a change of mass. Suppose that the mass of the drop is m when it is moving with velocity $\boldsymbol{v}$ and that moisture, whose velocity is $\boldsymbol{v}_0$, condenses on the drop at the rate dm/dt. The total rate of change of momentum is the sum of $m\,d\boldsymbol{v}/dt$, corresponding to the acceleration of the drop, and $(dm/dt)(\boldsymbol{v} - \boldsymbol{v}_0)$, corresponding to the rate of gain of momentum of the moisture. Thus the equation of motion of the drop, using Eq. (7.14), is

$$\boldsymbol{F} = m\frac{d\boldsymbol{v}}{dt} + \frac{dm}{dt}(\boldsymbol{v} - \boldsymbol{v}_0).$$

To solve this equation it is necessary to make some assumptions as to how the mass varies with time.

A conveyor on which material is dropped at one end and/or discharged at the other end is another example of variable mass. Let us consider, for example, the conveyor system of Fig. 7–14, where material is dropped continuously on the moving belt at the rate of dm/dt kg s^{-1}. The conveyor is moving at the constant velocity v and a force F is applied to move it. If M is the mass of the belt and m is the mass of the material already dropped at time t, the total momentum of the system at that time is $P = (m + M)v$. Therefore the force applied to the belt is

$$F = \frac{dP}{dt} = v\frac{dm}{dt}.$$

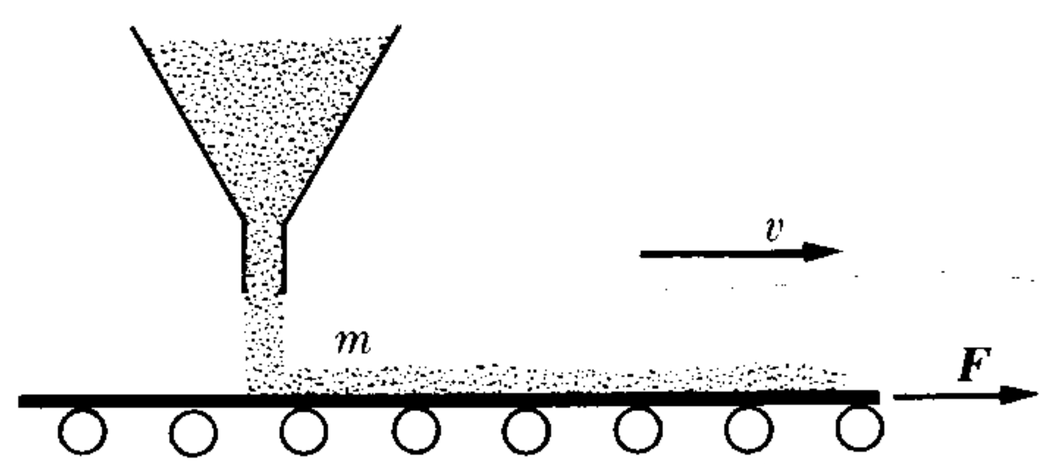

Figure 7–14

Note that the force in this case is entirely due to the change in mass and not to the change in velocity.

Perhaps the most interesting example is that of a rocket, whose mass decreases because it consumes the fuel it carries. In the following example we shall analyze the dynamics of a rocket.

EXAMPLE 7.9. Discuss the motion of a rocket.

Solution: A rocket is a missile which, instead of receiving an initial impulse from the expansion of gases in a gun barrel, is acted on by a continuous force derived from the exhaust produced in the combustion chamber within the missile itself. The rocket at takeoff has a certain amount of fuel which it uses gradually, and therefore its mass decreases.

Let us call $\boldsymbol{v}$ the velocity of the rocket relative to an inertial system, which we shall assume with good approximation to be the earth, and $\boldsymbol{v}'$ the exhaust velocity of the gases, also relative to the earth. Then the exhaust velocity of the gases relative to the rocket is

$$\boldsymbol{v}_e = \boldsymbol{v}' - \boldsymbol{v}.$$

This velocity is always opposed to $\boldsymbol{v}$, and is usually constant. Let m be the mass of the rocket, including its fuel, at any time. During a very small time interval dt, the mass of the system experiences a small change dm, which is negative because the mass decreases. In the same time interval the velocity of the rocket changes by $d\boldsymbol{v}$. The momentum of the system at time t is $\boldsymbol{p} = m\boldsymbol{v}$. The momentum at time $t + dt$, since $-dm$ is the positive value of the mass of the expelled gases, is

$$\boldsymbol{p}' = \underbrace{(m + dm)(\boldsymbol{v} + d\boldsymbol{v})}_{\text{Rocket}} + \underbrace{(-dm)\boldsymbol{v}'}_{\text{Gases}} = m\boldsymbol{v} + m\,d\boldsymbol{v} - (\boldsymbol{v}' - \boldsymbol{v})\,dm$$

or

$$\boldsymbol{p}' = m\boldsymbol{v} + m\,d\boldsymbol{v} - \boldsymbol{v}_e\,dm,$$

where we have neglected the second-order term $dm\,d\boldsymbol{v}$. The change in momentum in the time dt is

$$d\boldsymbol{p} = \boldsymbol{p}' - \boldsymbol{p} = m\,d\boldsymbol{v} - \boldsymbol{v}_e\,dm,$$

and the change of momentum of the system per unit time is

$$\frac{d\boldsymbol{p}}{dt} = m\frac{d\boldsymbol{v}}{dt} - \boldsymbol{v}_e\frac{dm}{dt}.$$

If $\boldsymbol{F}$ is the external force acting on the rocket, the equation of motion, according to Eq. (7.12), is

$$m\frac{d\boldsymbol{v}}{dt} - \boldsymbol{v}_e\frac{dm}{dt} = \boldsymbol{F}. \tag{7.24}$$

The second term on the left in Eq. (7.24) is often designated as the *thrust* of the rocket, since it is equal to the "force" due to the escaping exhaust. To solve this equation we must make some assumption about $\boldsymbol{v}_e$. In general it is assumed that $\boldsymbol{v}_e$ is constant. Also, neglecting air resistance and the variation of gravity with altitude, we may write $\boldsymbol{F} =$

$m\boldsymbol{g}$, so that Eq. (7.24) becomes

$$\frac{d\boldsymbol{v}}{dt} - \frac{\boldsymbol{v}_e}{m}\frac{dm}{dt} = \boldsymbol{g}. \tag{7.25}$$

To simplify, consider that the motion is vertical. Then $\boldsymbol{v}$ is directed upward and $\boldsymbol{v}_e$ and $\boldsymbol{g}$ downward, and Eq. (7.25) becomes

$$\frac{dv}{dt} + \frac{v_e}{m}\frac{dm}{dt} = -g.$$

Multiplying by dt and integrating from the beginning of the motion ($t = 0$), when the velocity is v_0 and the mass is m_0, up to an arbitrary time t, we have

$$\int_{v_0}^{v} dv + v_e \int_{m_0}^{m} \frac{dm}{m} = -g\int_0^t dt.$$

Then

$$v - v_0 + v_e \ln\frac{m}{m_0} = -gt,$$

or

$$v = v_0 + v_e \ln\left(\frac{m_0}{m}\right) - gt. \tag{7.26}$$

If t is the time required for burning all the fuel, then, in Eq. (7.26), m is the final mass and v is the maximum velocity attained by the rocket. In general $v_0 = 0$, and the last term (in many cases) is negligible. For example, if a rocket has an initial mass of 3000 tons, a final mass of 2780 tons after the fuel is burned, and the gases are expelled at a rate of 2840 lb s^{-1} (or 1290 kg s^{-1}), then $t = 155$ s. If we assume an exhaust velocity of 55,000 m s^{-1} and $v_0 = 0$, the maximum velocity of this stage of the rocket will be

$$\begin{aligned} v &= 55{,}000 \ln\frac{3000}{2780}\ \mathrm{m\ s^{-1}} - (9.8\ \mathrm{m\ s^{-2}})(155\ \mathrm{s}) \\ &= (55{,}000 \ln 1.08 - 1520)\ \mathrm{m\ s^{-1}} = 2710\ \mathrm{m\ s^{-1}}. \end{aligned}$$

This speed is almost 9000 ft s^{-1}, or approximately 6000 mi hr^{-1}. These figures refer to the Centaur rocket, which has five engines, each of which is capable of developing 1.5 million lbf of thrust at takeoff.

7.12 Curvilinear Motion

In the examples given so far, we have discussed rectilinear motion. Let us now consider the case of curvilinear motion. If the force has the same direction as the velocity, the motion is in a straight line. To produce curvilinear motion, the resultant force must be at an angle with respect to the velocity, so that the acceleration has a component perpendicular to the velocity which will account for the change in the direction of the motion. On the other hand, we recall that (if the mass is constant) the force is parallel to the acceleration. The relation of all these vectors in curvilinear motion is illustrated in Fig. 7–15.

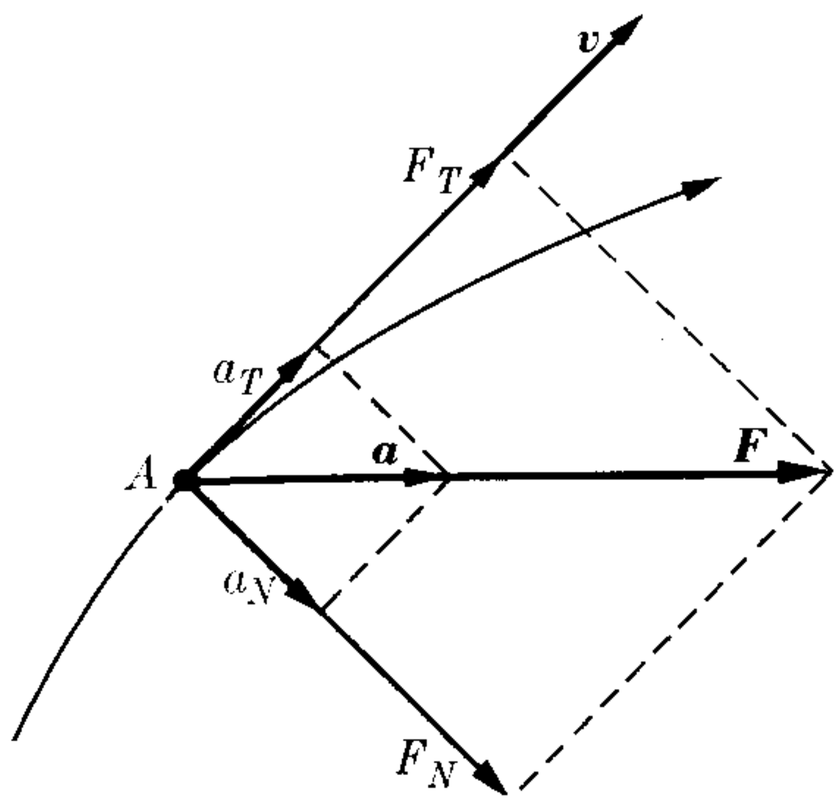

Fig. 7–15. Relationship between the tangential and normal components of the force and the acceleration in curvilinear motion.

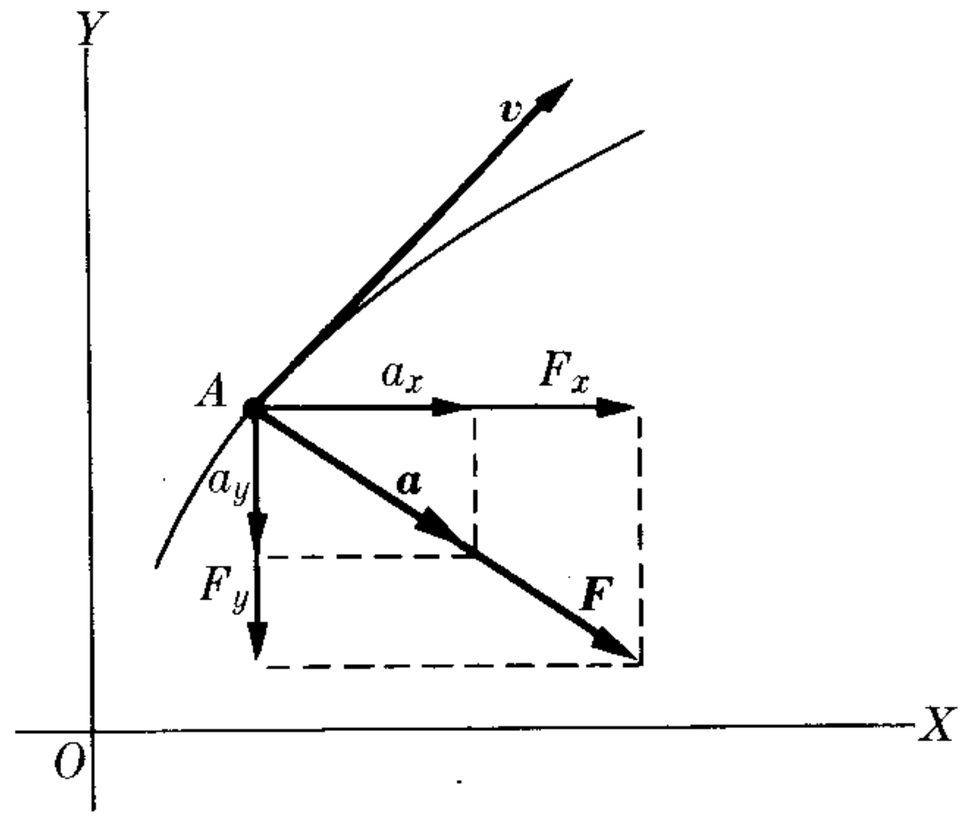

Fig. 7–16. Relationship between the rectangular components of the force and the acceleration in curvilinear motion.

From the relation $\boldsymbol{F} = m\boldsymbol{a}$ and both Eqs. (5.44), we conclude that the component of the force tangent to the path, or the *tangential force*, is

$$F_T = ma_T \qquad \text{or} \qquad F_T = m\frac{dv}{dt}, \tag{7.27}$$

and the component of force perpendicular to the path, or the *normal* or *centripetal force*, is

$$F_N = ma_N \qquad \text{or} \qquad F_N = \frac{mv^2}{\rho}, \tag{7.28}$$

where ρ is the radius of curvature of the path. The centripetal force is always pointing toward the center of curvature of the trajectory. The tangential force is responsible for the change in the magnitude of the velocity, and the centripetal force is responsible for the change in the direction of the velocity. If the tangential force is zero, there is no tangential acceleration and the motion is uniform circular motion. If the centripetal force is zero, there is no normal acceleration and the motion is rectilinear.

In the particular case of circular motion, ρ is the radius R of the circle and $v = \omega R$, so that the force is also

$$F_N = m\omega^2 R. \tag{7.29}$$

For uniform circular motion the only acceleration is a_N, which can be written, using Eq. (5.58), in vector form: $\boldsymbol{a} = \boldsymbol{\omega} \times \boldsymbol{v}$. Therefore $\boldsymbol{F} = m\boldsymbol{a} = m\boldsymbol{\omega} \times \boldsymbol{v} = \boldsymbol{\omega} \times (m\boldsymbol{v})$, and since $\boldsymbol{p} = m\boldsymbol{v}$,

$$\boldsymbol{F} = \boldsymbol{\omega} \times \boldsymbol{p}. \tag{7.30}$$

This is a useful mathematical relation between the force, the angular velocity, and the linear momentum of a particle in uniform circular motion.

Sometimes it may be more convenient to use the rectangular components of $\boldsymbol{F}$ (Fig. 7–16). For example, in the case of plane motion, the vector equation $\boldsymbol{F} = m\boldsymbol{a}$ may be split into the following two equations:

$$F_x = ma_x \qquad \text{and} \qquad F_y = ma_y$$

or

$$F_x = m\frac{dv_x}{dt} \qquad \text{and} \qquad F_y = m\frac{dv_y}{dt}\,. \tag{7.31}$$

By integrating these equations, we may obtain the velocity and the position of the particle at any time.

In general, when we include the case in which the mass is variable, we must use $\boldsymbol{F} = d\boldsymbol{p}/dt$. But $\boldsymbol{p}$, being parallel to the velocity, is tangent to the path. Thus we may write $\boldsymbol{p} = \boldsymbol{u}_T p$ and, using Eq. (5.42), we have

$$\boldsymbol{F} = \frac{d\boldsymbol{p}}{dt} = \boldsymbol{u}_T\frac{dp}{dt} + \frac{d\boldsymbol{u}_T}{dt}p = \boldsymbol{u}_T\frac{dp}{dt} + \boldsymbol{u}_N\frac{vp}{\rho}\,.$$

Therefore, instead of Eqs. (7.27) and (7.28), we have

$$F_T = \frac{dp}{dt} \qquad \text{and} \qquad F_N = \frac{pv}{\rho}\,.$$

EXAMPLE 7.10. Railroad tracks and highways are banked at curves to produce the centripetal force required by a vehicle moving along a curve. Find the angle of banking in terms of the velocity of the vehicle along the curve.

Solution: Figure 7–17 illustrates banking, although the angle has been exaggerated. The forces acting on the car are its weight $W = mg$ and the normal force N due to the tracks. Their resultant F_N must be enough to produce the centripetal force given by

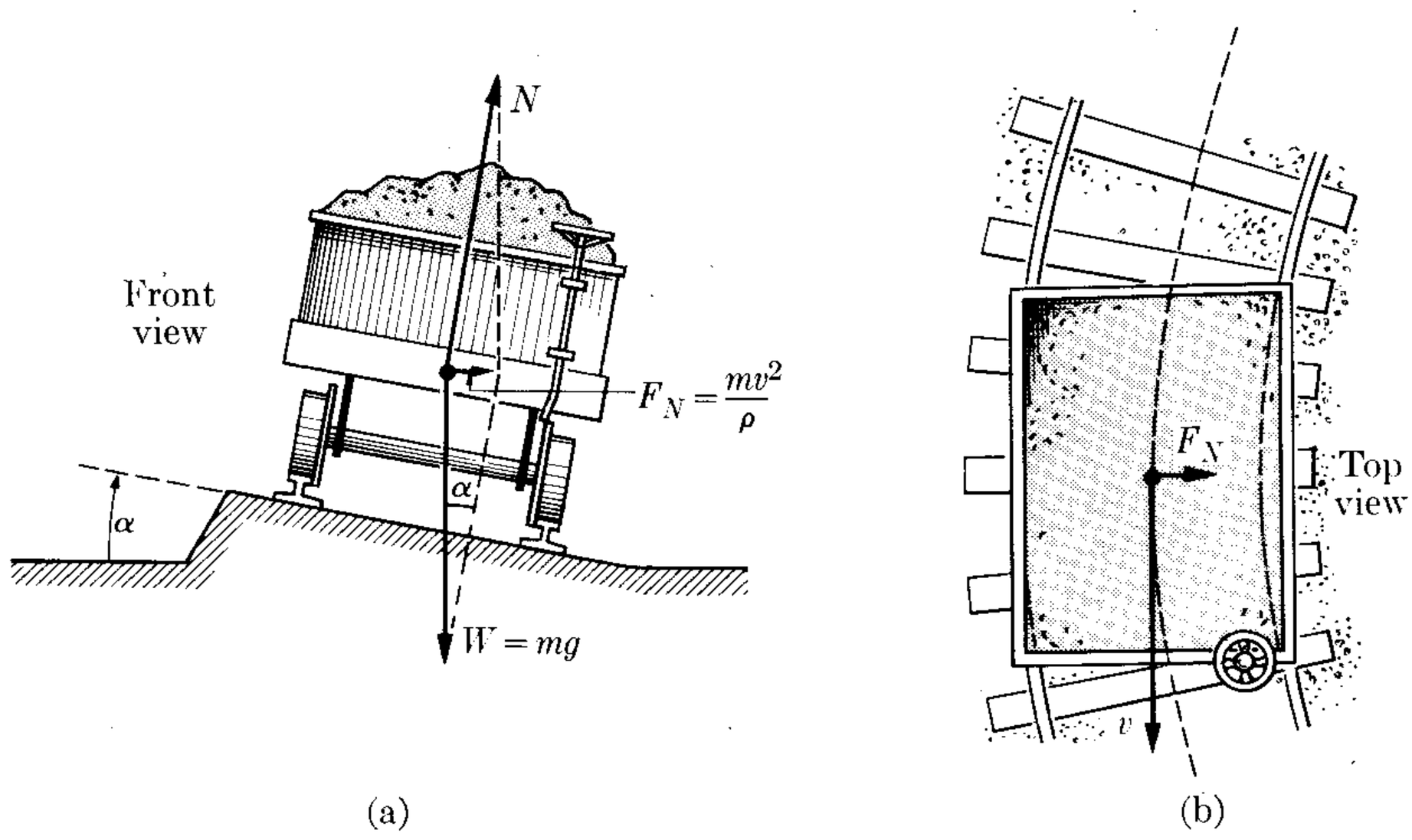

Fig. 7–17. Banking of curves to produce a centripetal force.

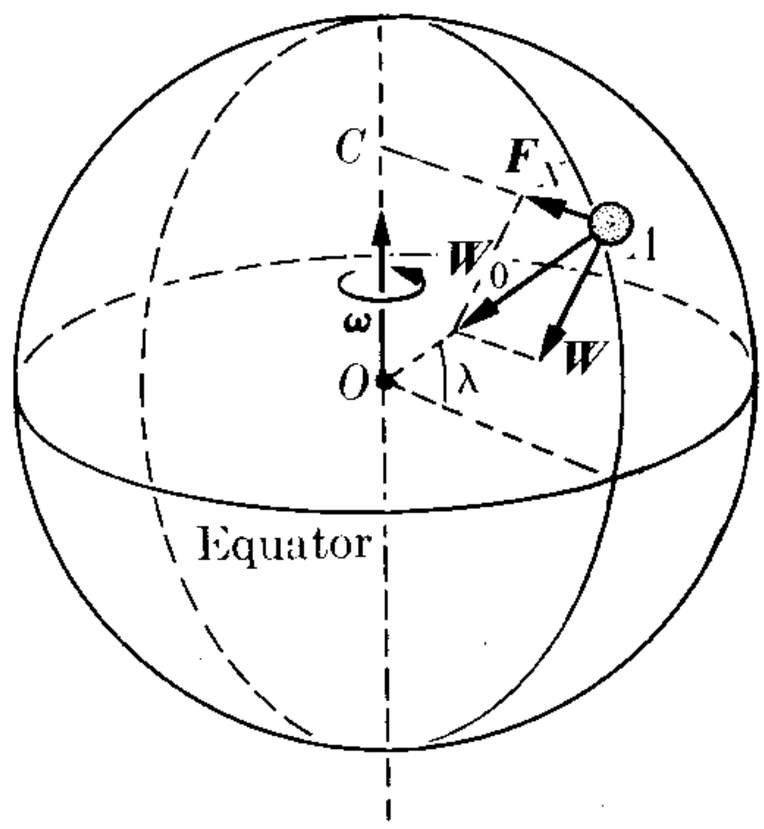

Fig. 7–19. Effect of earth's rotation on the weight of a body.

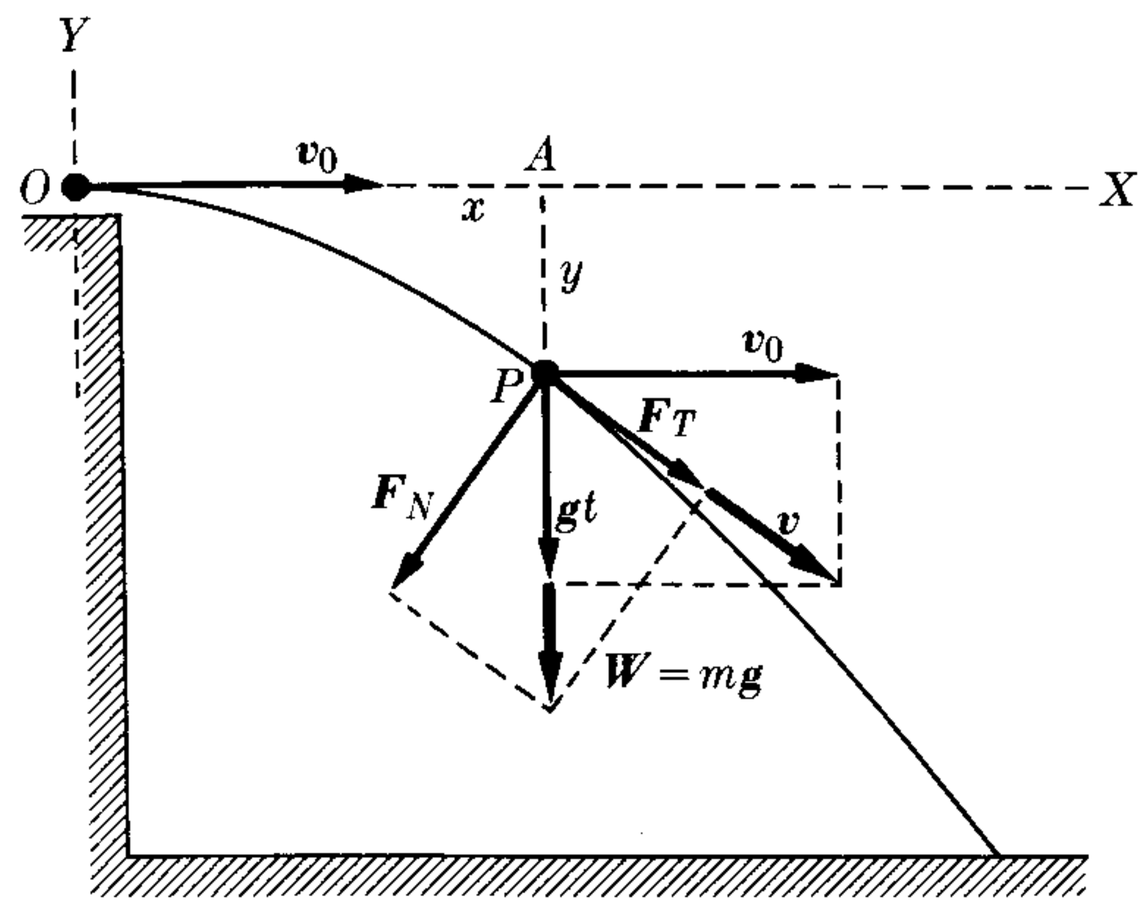

Figure 7–20

$g = W/m$. If the particle A is suspended from a point by means of a string (as with a plumb line), the string will lie in the same direction as W. Also, the upward pull on A produced by the string must be equal to W. Therefore, when a spring is used to determine the weight of a body, it is the force W that is measured. Only at the poles and along the equator do W_0 and W have the same direction, and only in those places is a plumb line along the radial line.

EXAMPLE 7.13. Calculate the tangential and normal forces acting on a projectile thrown horizontally from the top of a building.

Solution: If the projectile is thrown with an initial horizontal velocity v_0 (Fig. 7–20), then at point P its horizontal velocity is still v_0 but its vertical velocity is gt, where t is the time required for the projectile to drop the distance y, or travel the horizontal distance $x = v_0 t$. Therefore the total velocity of the projectile is

$$v = \sqrt{v_0^2 + g^2 t^2}.$$

Thus Eq. (7.27) gives the tangential force as

$$F_T = m\frac{dv}{dt} = \frac{mg^2 t}{\sqrt{v_0^2 + g^2 t^2}}.$$

To find the centripetal force we could use Eq. (7.28), but that would require the previous calculation of the radius of curvature of the path, which is a parabola. We can circumvent it in this case because we know that the resultant force is

$$W = mg = \sqrt{F_T^2 + F_N^2}.$$

Therefore

$$F_N = \sqrt{W^2 - F_T^2} = \frac{mgv_0}{\sqrt{v_0^2 + g^2 t^2}}.$$

Eq. (7.28). Thus $F_N = mv^2/\rho$, where ρ is the radius of the curve. Then from the figure we have that

$$\tan\alpha = \frac{F_N}{W} = \frac{v^2}{\rho g}.$$

The result is thus independent of the mass of the body. Since α is fixed once the tracks have been laid, this formula gives the correct speed to traverse the curve so that there will be no sidewise forces acting on the vehicle. For smaller or somewhat larger speeds there is no great problem with the curve, because the tracks provide the balancing force necessary. However, for much larger speeds the car will tend to jump off the curve.

EXAMPLE 7.11. A mass m suspended from a fixed point by a string of length L is made to rotate around the vertical with angular velocity ω. Find the angle of the string with the vertical. This arrangement is called a *conical pendulum.*

Solution: The system has been illustrated in Fig. 7–18. The mass A moves around the vertical OC, describing a circle of radius $R = CA = OA \sin\alpha = L\sin\alpha$. The forces acting on A are its weight $W = mg$ and the tension F of the string. Their resultant F_N must be just the centripetal force required to describe the circle. Thus, using Eq. (7.29), we have

$$F_N = m\omega^2 R = m\omega^2 L\sin\alpha.$$

From the figure we see that

$$\tan\alpha = \frac{F_N}{W} = \frac{\omega^2 L\sin\alpha}{g}$$

or, since $\tan\alpha = \sin\alpha/\cos\alpha$,

$$\cos\alpha = \frac{g}{\omega^2 L}.$$

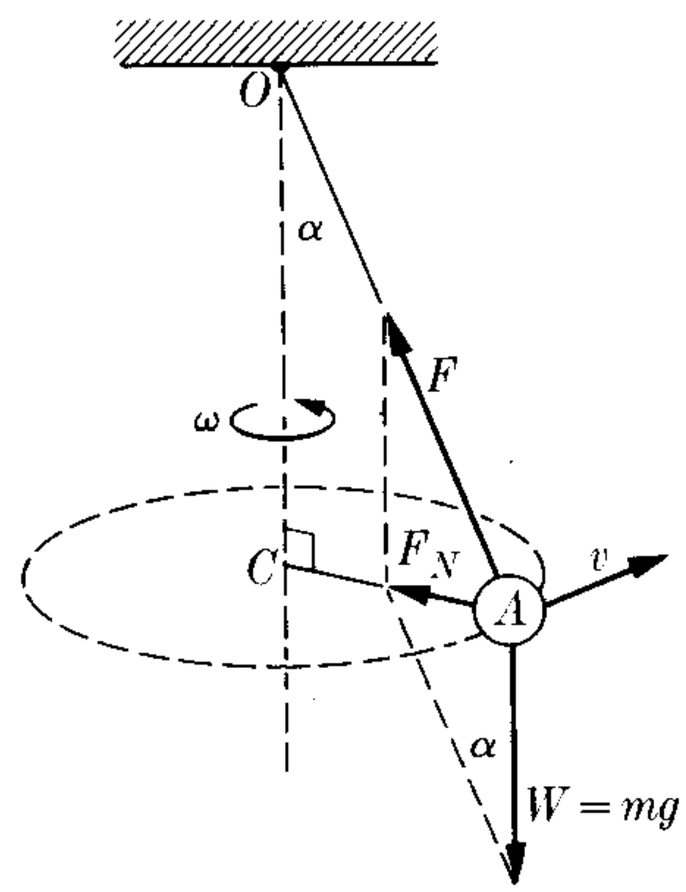

Fig. 7–18. Conical pendulum.

Therefore the larger the angular velocity ω, the larger the angle α, as experiment shows. For this reason the conical pendulum has long been used as a speed regulator for engines; it closes the steam-intake valve when the velocity goes above a prefixed limit and opens it when it falls below.

EXAMPLE 7.12. Analyze the effect of the earth's rotation on the weight of a body.

Solution: In Section 6.5 we discussed, from a kinematical point of view, the motion of a body relative to a frame of reference rotating with the earth. In this example we shall look at the same problem dynamically.

Figure 7–19 shows a particle A on the earth's surface. The gravitational force due to the earth's attraction is designated by $\boldsymbol{W}_0$. If the earth were not rotating, the acceleration of a body near the earth's surface would be $\boldsymbol{g}_0 = \boldsymbol{W}_0/m$. However, due to the earth's rotation, part of this force must be used to produce the centripetal force $\boldsymbol{F}_N$ required for A to move in a circle of radius $CA = r\cos\lambda$ with angular velocity ω. That is, using Eq. (7.29), we have $F_N = m\omega^2 r\cos\lambda$. The difference $\boldsymbol{W}_0 - \boldsymbol{F}_N$ gives the net force $\boldsymbol{W}$, which produces a downward pull on the particle. Thus the effective acceleration of gravity is

7.13 Angular Momentum

The angular momentum around point O (Fig. 7–21) of a particle of mass m moving with velocity $\boldsymbol{v}$ (and therefore having momentum $\boldsymbol{p} = m\boldsymbol{v}$) is defined by the vector product

$$\boldsymbol{L} = \boldsymbol{r} \times \boldsymbol{p}$$

or (7.32)

$$\boldsymbol{L} = m\boldsymbol{r} \times \boldsymbol{v}.$$

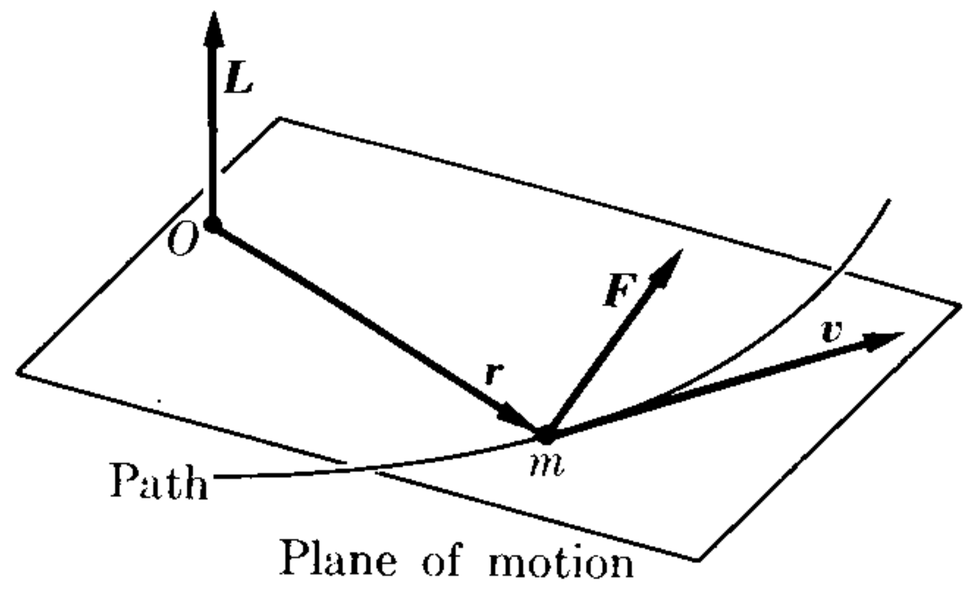

Fig. 7–21. Angular momentum of a particle.

The angular momentum is therefore a vector perpendicular to the plane determined by $\boldsymbol{r}$ and $\boldsymbol{v}$. The angular momentum of the particle in general changes in magnitude and direction while the particle moves. However, if a particle moves in a plane, and the point O lies in the plane, the direction of the angular momentum remains the same, that is, perpendicular to the plane, since both $\boldsymbol{r}$ and $\boldsymbol{v}$ are in the plane. In the case of circular motion (Fig. 7–22), when O is the center of the circle, the vectors $\boldsymbol{r}$ and $\boldsymbol{v}$ are perpendicular, and $v = \omega r$, so that

$$L = mrv = mr^2\omega. \tag{7.33}$$

The direction of $\boldsymbol{L}$ is the same as that of $\boldsymbol{\omega}$, so that Eq. (7.33) can be written vectorially as

$$\boldsymbol{L} = mr^2\boldsymbol{\omega}. \tag{7.34}$$

If the plane motion is not circular, but curvilinear, we can decompose the velocity into its radial and transverse components, as explained in Section 5.11; that is, $\boldsymbol{v} = \boldsymbol{v}_r + \boldsymbol{v}_\theta$ (Fig. 7–23). Then we may write the angular momentum as

$$\boldsymbol{L} = m\boldsymbol{r} \times (\boldsymbol{v}_r + \boldsymbol{v}_\theta) = m\boldsymbol{r} \times \boldsymbol{v}_\theta,$$

since $\boldsymbol{r} \times \boldsymbol{v}_r = 0$ (the two vectors are parallel). Then, for the magnitude of $\boldsymbol{L}$, we have $L = mrv_\theta$. Or, since $v_\theta = r(d\theta/dt)$ according to Eq. (5.64), we may write

$$L = mr^2\frac{d\theta}{dt}. \tag{7.35}$$

This expression is identical to Eq. (7.33) for circular motion, since $\omega = d\theta/dt$, but in the general case r is not constant. Remembering Eq. (3.26) for the vector product, we may write the angular momentum of a particle as

$$\boldsymbol{L} = \boldsymbol{r} \times \boldsymbol{p} = \begin{vmatrix} \boldsymbol{u}_x & \boldsymbol{u}_y & \boldsymbol{u}_z \\ x & y & z \\ p_x & p_y & p_z \end{vmatrix}$$

or, in terms of the components,

$$L_x = yp_z - zp_y, \qquad L_y = zp_x - xp_z, \qquad L_z = xp_y - yp_x. \tag{7.36}$$

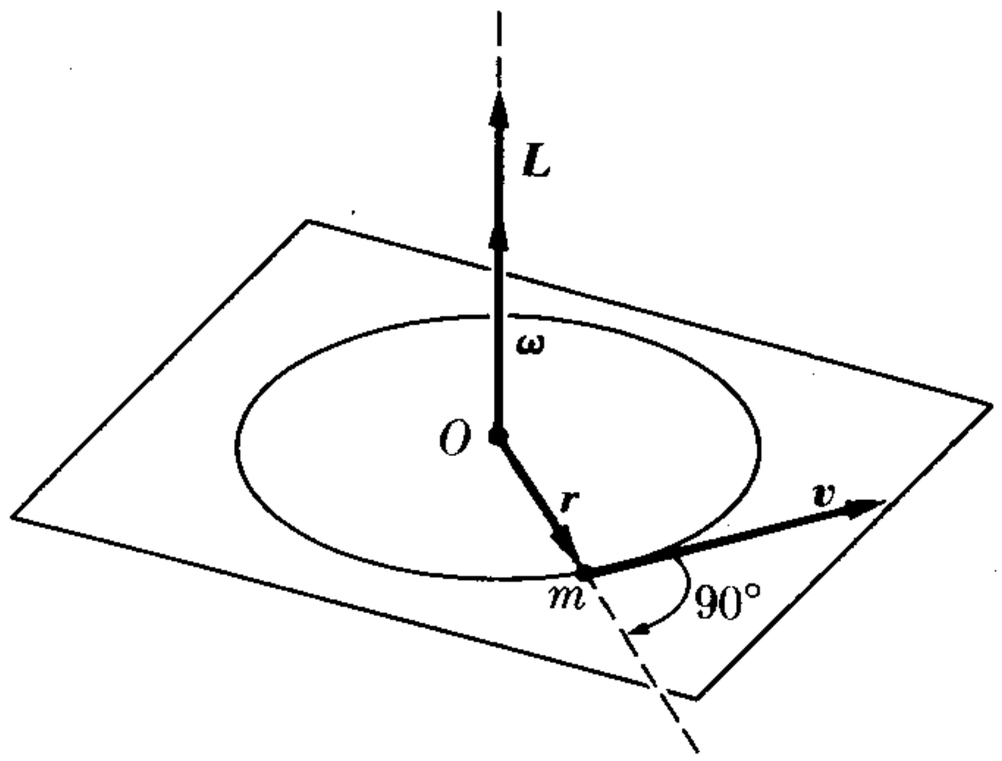

Fig. 7–22. Vector relation between angular velocity and angular momentum in circular motion.

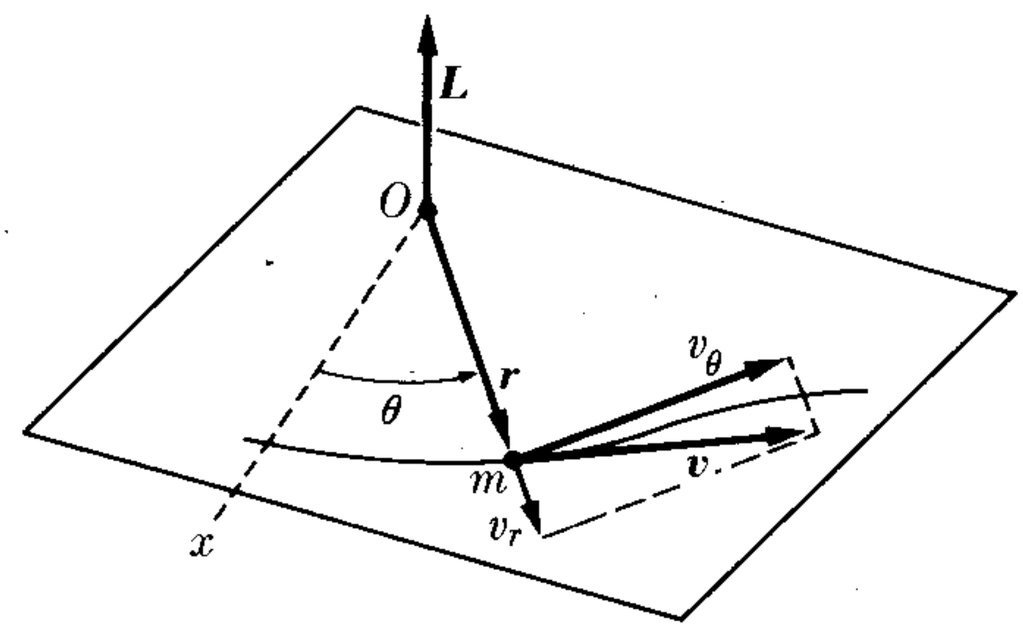

Fig. 7–23. Relation between angular momentum and the transverse component of the velocity.

We may note that for motion in a plane, let us say the XY-plane, we have $z = 0$ and $p_z = 0$, so that $L_x = L_y = 0$, and only the L_z-component remains. That is, the angular momentum is perpendicular to the plane, as we have indicated previously, using a different logic.

Let us now take the time derivative of Eq. (7.32). This gives

$$\frac{d\boldsymbol{L}}{dt} = \frac{d\boldsymbol{r}}{dt} \times \boldsymbol{p} + \boldsymbol{r} \times \frac{d\boldsymbol{p}}{dt}. \tag{7.37}$$

But $d\boldsymbol{r}/dt = \boldsymbol{v}$, and $\boldsymbol{p} = m\boldsymbol{v}$ is always parallel to $\boldsymbol{v}$, so that

$$\frac{d\boldsymbol{r}}{dt} \times \boldsymbol{p} = \boldsymbol{v} \times \boldsymbol{p} = m\boldsymbol{v} \times \boldsymbol{v} = 0.$$

On the other hand, $d\boldsymbol{p}/dt = \boldsymbol{F}$ according to Eq. (7.12). Therefore, Eq. (7.37) becomes $d\boldsymbol{L}/dt = \boldsymbol{r} \times \boldsymbol{F}$. Or, when we remember that according to definition (4.5), the torque of $\boldsymbol{F}$ around O is $\boldsymbol{\tau} = \boldsymbol{r} \times \boldsymbol{F}$, we finally obtain

$$\frac{d\boldsymbol{L}}{dt} = \boldsymbol{\tau}. \tag{7.38}$$

The student must note that this equation is correct only if $\boldsymbol{L}$ and $\boldsymbol{\tau}$ are measured relative to the same point.

Equation (7.38), which bears a great resemblance to Eq. (7.12), with the linear momentum $\boldsymbol{p}$ replaced by the angular momentum $\boldsymbol{L}$, and the force $\boldsymbol{F}$ replaced by the torque $\boldsymbol{\tau}$, is fundamental to the discussion of rotational motion. It simply states that

> *the time rate of change of the angular momentum of a particle is equal to the torque of the force applied to it.*

This implies that the change $d\boldsymbol{L}$ in the angular momentum in a short interval dt is parallel to the torque $\boldsymbol{\tau}$ applied to the particle.

7.14 Central Forces

If the torque on a particle is zero ($\boldsymbol{\tau} = \boldsymbol{r} \times \boldsymbol{F} = 0$), then according to Eq. (7.38), we must have $d\boldsymbol{L}/dt = 0$ or $\boldsymbol{L} =$ constant vector. Thus the angular momentum of a particle is constant if the torque is zero. This condition is fulfilled if $\boldsymbol{F} = 0$; that is, if the particle is free. From Fig. 7–24, we have $L = mvr \sin\theta = mvd$, where $d = r \sin\theta$. This quantity remains a constant because all factors involved are also constants, since the path of the free particle is in a straight line and the velocity does not change.

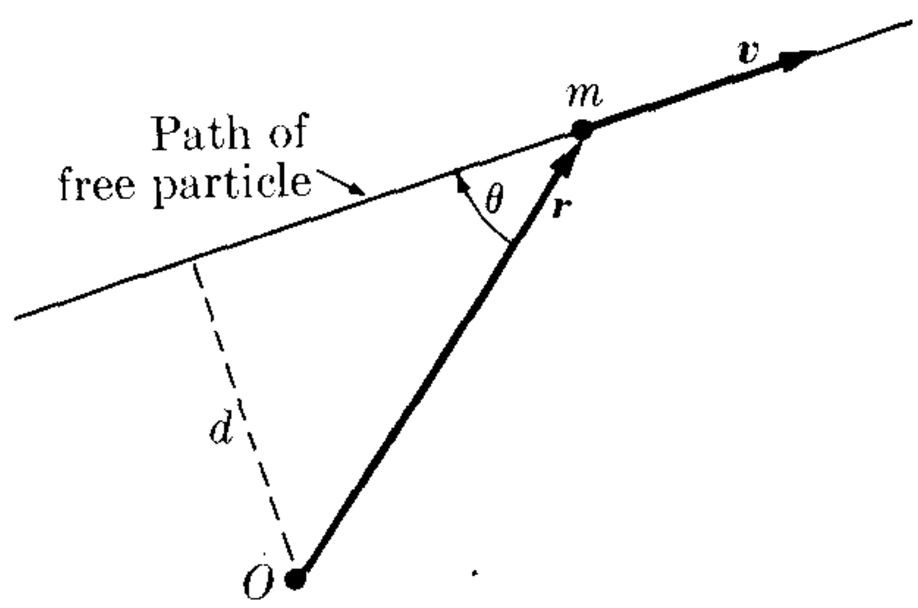

Fig. 7–24. Angular momentum is constant for a free particle.

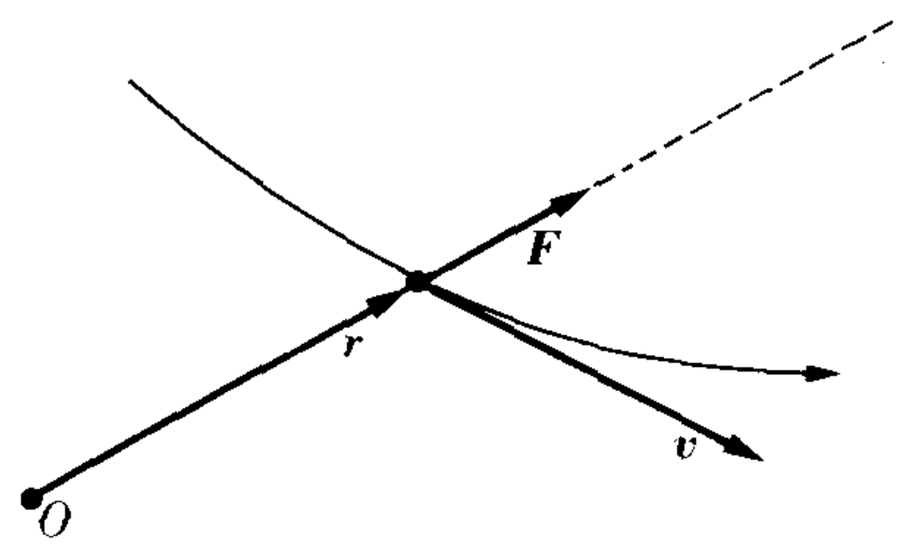

Fig. 7–25. Angular momentum is constant for motion under a central force.

The condition $\boldsymbol{r} \times \boldsymbol{F} = 0$ is also fulfilled if $\boldsymbol{F}$ is parallel to $\boldsymbol{r}$; in other words, if the direction of $\boldsymbol{F}$ passes through the point O. A force whose direction always passes through a fixed point is called a *central force* (Fig. 7–25). Therefore, when a body moves under the action of a central force its angular momentum remains constant, the converse being also true. Another way of stating this is to say that

> *when the force is central, the angular momentum relative to the center of force is a constant of motion, and conversely.*

This result is very important because many forces in nature are central. For example, the earth moves around the sun under the influence of a central force whose direction is always through the center of the sun. The earth's angular momentum relative to the sun is thus constant. The electron in a hydrogen atom essentially moves under the central force due to the electrostatic interaction with the nucleus, with the direction of the force being always pointed toward the nucleus. Thus the angular momentum of the electron relative to the nucleus is constant.

In atoms having many electrons, the force on each electron is not rigorously central because, in addition to the central interaction with the nucleus, there are also the interactions with the other electrons. However, in general, the average force on the electron may be considered as central. Also, in certain nuclei, we may assume as a first approximation that their components (protons and neutrons) move under average central forces.

In a molecule, on the other hand, the force on an electron is not central, because it is the result of the attraction produced by the different nuclei and the repulsion of the other electrons. Therefore the angular momentum of the electrons is not constant. In a diatomic molecule, an interesting situation arises (Fig. 7–26). An electron e revolves around the two nuclei P_1 and P_2, subject to their forces $\boldsymbol{F}_1$ and $\boldsymbol{F}_2$, whose resultant $\boldsymbol{F} = \boldsymbol{F}_1 + \boldsymbol{F}_2$ always lies in the plane determined by $\overrightarrow{Oe} = \boldsymbol{r}$ and the line through the two nuclei, or the Z-axis. The resultant torque on the electron relative to the center of mass O of the molecule (if we neglect all other electron interactions) is

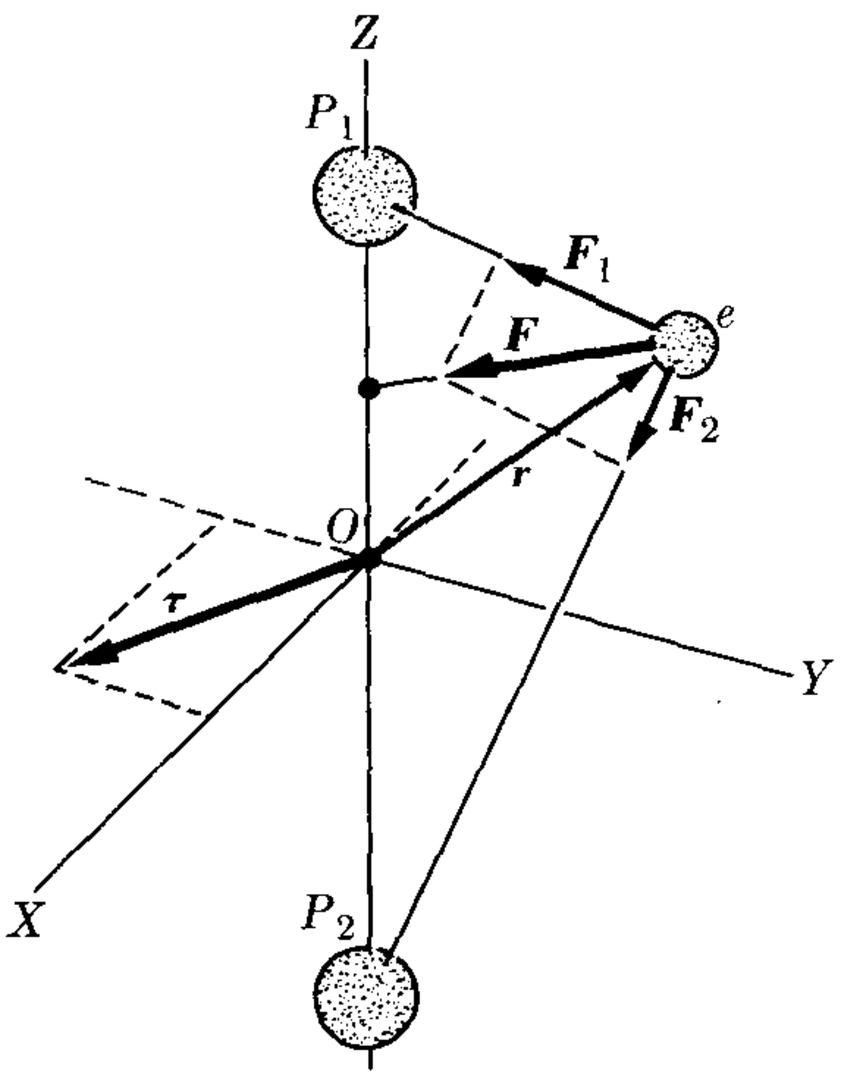

Fig. 7–26. For motion under an axial force, the component of the angular momentum along the axis is constant.

$$\boldsymbol{\tau} = \boldsymbol{r} \times (\boldsymbol{F}_1 + \boldsymbol{F}_2) = \boldsymbol{r} \times \boldsymbol{F}.$$

From Fig. 7–26 we see that this torque is perpendicular to the plane determined by the position vector $\boldsymbol{r}$ and the Z-axis. Thus the torque is in the XY-plane, or $\tau_z = 0$. Accordingly, Eq. (7.38) gives $dL_z/dt = 0$ or $L_z = \text{const}$. Thus, although the angular momentum of the electron is not constant, its component along the molecular or Z-axis is constant. This result is valid not only for a diatomic molecule but for any linear molecule, or in a more general form, for motion under a force that always passes through a fixed axis. Such a force is called an *axial force*. Therefore,

> *when the force is axial, the component of the angular momentum along the axis is constant.*

This result is very useful when we study the structure of atoms and molecules.

The motion due to a central force is always in a plane because $\boldsymbol{L}$ is constant. Therefore, using Eq. (7.35), we have

$$r^2 \frac{d\theta}{dt} = \text{const.} \tag{7.39}$$

When the particle moves from P to P' (Fig. 7–27), the radius vector $\boldsymbol{r}$ sweeps out the shaded area, corresponding to the triangle OPP'. Therefore

$$dA = \text{area } \Delta OPP' = \tfrac{1}{2} r^2 \, d\theta,$$

and the area swept out in unit time is

$$\frac{dA}{dt} = \tfrac{1}{2} r^2 \frac{d\theta}{dt}.$$

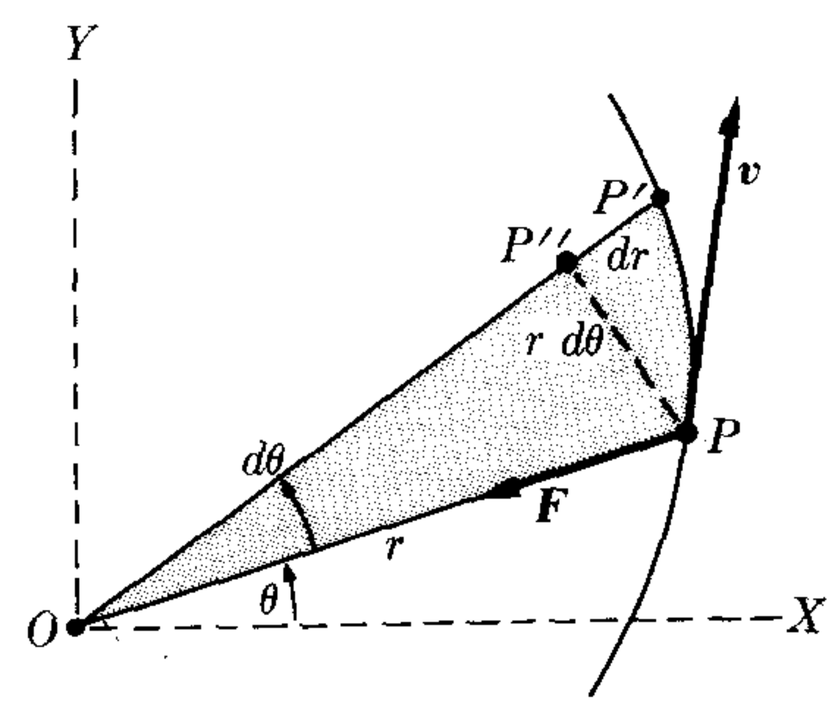

Fig. 7–27. Under central forces, the position vector sweeps out equal areas in equal times.

Comparing this result with Eq. (7.39), we see that $dA/dt =$ const, indicating that *in the motion under central forces, the radius vector of the particle sweeps out equal areas in equal times.* This result is of historical interest in connection with the discovery of the laws of planetary motion, and is known as *Kepler's second law.* We shall refer to it in more detail in Chapter 13, when we discuss planetary motion.

EXAMPLE 7.14. In the case of the projectile of Example 7.13, find the angular momentum and the torque around O. Then verify that Eq. (7.38) holds.

Solution: When we set our X- and Y-axes as indicated in Fig. 7–20, the coordinates of point P are $x = OA = v_0t$, $y = AP = -\frac{1}{2}gt^2$, and the components of the velocity of P are $v_x = v_0$, $v_y = -gt$. Recalling that $\boldsymbol{p} = m\boldsymbol{v}$ and using the third equation of (7.36), we may write

$$L_z = xp_y - yp_x = m(xv_y - yv_x) = -\tfrac{1}{2}mgv_0t^2.$$

Also the components of the force applied to P are $F_x = 0$, $F_y = -mg$. Thus, using Eq. (4.8), we obtain

$$\tau_z = xF_y - yF_x = -mgv_0t.$$

The student may verify that in this case $dL_z/dt = \tau_z$, so that Eq. (7.38) holds.

EXAMPLE 7.15. Estimate the angular momentum of the earth around the sun, and that of an electron around the nucleus in a hydrogen atom. In both cases assume, for simplicity, that the orbit is circular, so that the relations of Fig. 7–22 apply.

Solution: The mass of the earth is 5.98×10^{24} kg and its mean distance from the sun is 1.49×10^{11} m. Also, from our definition of the second given in Section 2.3, we conclude that the period of revolution of the earth around the sun is 3.16×10^7 s. Thus the average angular velocity of the earth around the sun is, from Eq. (5.51),

$$\omega = \frac{2\pi}{P} = \frac{2\pi}{3.16 \times 10^7 \text{ s}} = 1.98 \times 10^{-7} \text{ s}^{-1}.$$

Therefore, from Eq. (7.33), the angular momentum of the earth relative to the sun is

$$\begin{aligned} L &= mr^2\omega = (5.98 \times 10^{24} \text{ kg})(1.49 \times 10^{11} \text{ m})^2(1.98 \times 10^{-7} \text{ s}^{-1}) \\ &= 2.67 \times 10^{40} \text{ m}^2 \text{ kg s}^{-1}. \end{aligned}$$

On the other hand, an electron in a hydrogen atom has a mass of 9.11×10^{-31} kg, its mean distance to the nucleus is 5.29×10^{-11} m, and its angular velocity is 4.13×10^{16} s^{-1}. Thus, again using Eq. (7.33), we find the angular momentum of the electron around the nucleus to be

$$\begin{aligned} L &= mr^2\omega = (9.11 \times 10^{-31} \text{ kg})(5.29 \times 10^{-11} \text{ m})^2(4.13 \times 10^{16} \text{ s}^{-1}) \\ &= 1.05 \times 10^{-34} \text{ m}^2 \text{ kg s}^{-1}. \end{aligned}$$

This numerical value constitutes one of the most important constants in physics, and is designated by the symbol $\hbar$, read h-bar. The angular momentum of atomic and fundamental particles is usually expressed in units of $\hbar$. The quantity $h = 2\pi\hbar$ is called *Planck's constant.*

The student must realize the tremendous disparity in the values of the physical quantities that enter into the two situations we have worked out, and he may wonder if the same laws apply in both cases. We may answer here by saying that in both cases, since the forces are central, the angular momentum is constant. However, in the electron's case, when we refer to an atomic particle, a certain revision of our methods will be required; the new technique is called quantum mechanics, but we shall not take up this subject at this time. We may state in advance, however, that the result we shall obtain will essentially agree with the one we have obtained in this example.

EXAMPLE 7.16. Scattering of a particle by a central repulsive inverse-square force.

Solution: Let us look at the deviation or scattering that a particle suffers when it is subject to a repulsive force which is inversely proportional to the square of the distance from the moving particle to a fixed point or center of force. This problem is of special interest because of its application in atomic and nuclear physics. For example, when a proton, accelerated by a machine such as a cyclotron, passes near a nucleus of the target material, it is deflected or scattered under the action of a force of this kind, due to the electrostatic repulsion of the nucleus.

Let O be the center of the force and A a particle thrown against O from a great distance with velocity v_0 (Fig. 7–28). The distance b, called the *impact parameter,* is the perpendicular distance between the line of action of $\boldsymbol{v}_0$ and a line drawn through O parallel to it. Assuming that the force between A and O is repulsive and central, the particle will follow the path AMB. The form of the curve depends on how the force varies with the distance. If the force is inversely proportional to the square of the distance, that is, if

$$F = k/r^2, \tag{7.40}$$

the path is a hyperbola, as will be proved in Section 13.5. When the particle is at A its angular momentum is mv_0b. In any position such as M, its angular momentum, according to Eq. (7.35), is $mr^2\,(d\theta/dt)$. Therefore, since the angular momentum must remain constant because the force is central,

$$mr^2\frac{d\theta}{dt} = mv_0b. \tag{7.41}$$

The equation of motion in the Y-direction is obtained by combining Eq. (7.40) with the second of Eqs. (7.31); that is,

$$m\frac{dv_y}{dt} = F_y = F\sin\theta = \frac{k\sin\theta}{r^2}.$$

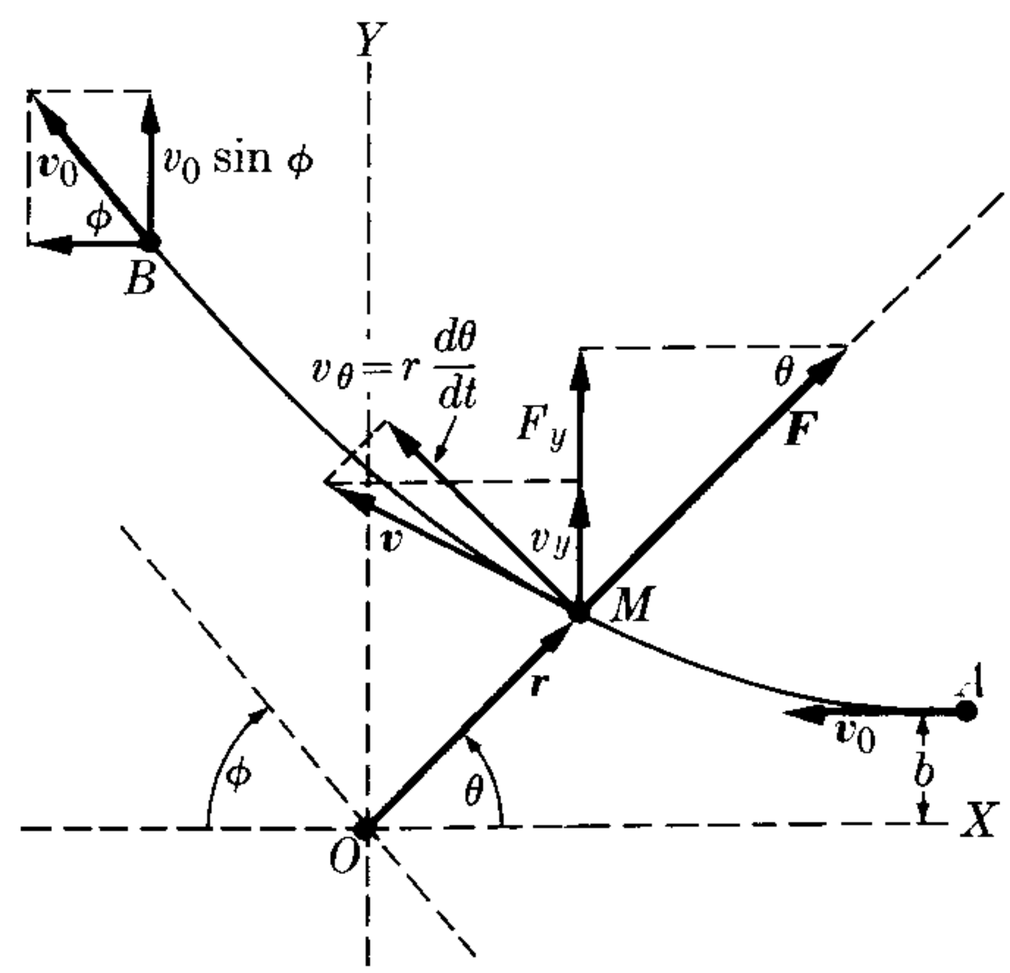

Fig. 7–28. Scattering of a particle under an inverse-square central force.

Eliminating r^2 by using Eq. (7.41), we may write

$$\frac{dv_y}{dt} = \frac{k}{mv_0 b} \sin\theta \frac{d\theta}{dt}.$$

To find the deflection of the particle, we must integrate this equation from one extreme of the path to the other. At A the value of v_y is zero because the initial motion is parallel to the X-axis, and also $\theta = 0$. At B we have $v_y = v_0 \sin\phi$ and $\theta = \pi - \phi$. Note that at B the velocity is again v_0 because, by symmetry, the velocity lost when the particle approaches O must be regained when it recedes from O. (The principle of conservation of energy, to be discussed in the next chapter, also verifies this.) Then

$$\int_0^{v_0 \sin\phi} dv_y = \frac{k}{mv_0 b} \int_0^{\pi-\phi} \sin\theta \, d\theta$$

or

$$v_0 \sin\phi = \frac{k}{mv_0 b}(1 + \cos\phi).$$

Remembering that $\cot \frac{1}{2}\phi = (1 + \cos\phi)/\sin\phi$, we finally get

$$\cot \tfrac{1}{2}\phi = \frac{mv_0^2}{k} b. \tag{7.42}$$

This relation gives the scattering angle ϕ in terms of the impact parameter b.

In Section 14.7 we shall apply this equation to the scattering of charged particles by nuclei. Note that result (7.42) is valid only for an inverse-square force. If the force depends on the distance in a different manner, the angle of scattering satisfies a different equation. Therefore, scattering experiments are very useful when we wish to determine the law of force in interactions between particles.

In nuclear physics laboratories, scattering experiments are performed by accelerating electrons, protons, or other particles by means of a cyclotron, a Van de Graaff accelerator, or some other similar device, and observing the angular distribution of the scattered particles.

7.15 Equilibrium and Rest

We conclude this chapter with a brief review of the concepts of rest and equilibrium. A particle is *at rest* relative to an inertial observer when its velocity, as measured by the observer, is zero. A particle is in *equilibrium* relative to an inertial observer when its acceleration is zero ($\boldsymbol{a} = 0$). Then, from Eq. (7.15), we conclude that $\boldsymbol{F} = 0$; that is, a particle is in equilibrium when the resultant of all the forces acting on it is zero. This definition was used in Chapter 4.

A particle may be at rest relative to an inertial observer, but may not be in equilibrium. For example, when we throw a stone vertically upward, the stone is momentarily at rest when it reaches its maximum height. However, it is not in equilibrium because it is subject to the unbalanced downward pull of the earth. For that reason the stone immediately begins to fall.

Also, a particle may be in equilibrium and yet not be at rest relative to an inertial observer. An example of this is a free particle. Since no forces act on it,

there is no acceleration and the particle is in equilibrium. However, the particle may not be at rest relative to many inertial observers. The most common situation one encounters is that of a particle which is both at rest and in equilibrium at the same time. For that reason many people erroneously consider the two concepts synonymous. Of course a particle in equilibrium may always be at rest in some inertial frame of reference.

References

1. "Inertia," D. Sciama, *Sci. Am.*, February 1957, page 99
2. "Galileo and the Law of Inertia," S. Drake, *Am. J. Phys.* **32,** 601 (1964)
3. "Isaac Newton," I. Cohen, *Sci. Am.*, December 1955, page 73
4. "Resource Letter PhM-1 on the Philosophical Foundation of Classical Mechanics," M. Hesse, *Am. J. Phys.* **32,** 905 (1964)
5. "The Conservation Laws of Physics," G. Feinberg and M. Goldharber, *Sci. Am.*, October 1963, page 36
6. "Friction," F. Palmer, *Sci. Am.*, February 1951, page 54
7. "Resource Letter F-1 on Friction," E. Rabinowicz, *Am. J. Phys.* **31,** 897 (1963)
8. "The Shape of Raindrops," J. McDonald, *Sci. Am.*, February 1954, page 64
9. "Billiard-Ball Collision Experiment," J. Bayes and W. Scott, *Am. J. Phys.* **31,** 197 (1963)
10. "Duration of Atomic Collisions," O. Oldenberg, *Am. J. Phys.* **25,** 94 (1957)
11. *Concepts of Mass in Classical and Modern Physics*, M. Jammer. Cambridge, Mass.: Harvard University Press, 1961
12. *Mechanics*, Keith R. Symon. Reading, Mass.: Addison-Wesley, second edition, 1960, Sections 2–4, 4–4, and 4–5
13. *Physical Mechanics*, Robert B. Lindsay. Princeton, N.J.: D. Van Nostrand, 1963, Sections 1–6 through 1–10, 3–10, 3–6, 3–7
14. *Introduction to Engineering Mechanics*, John V. Huddleston. Reading, Mass.: Addison-Wesley, 1961, Chapter 19
15. *Vector Mechanics*, D. Christie. New York: McGraw-Hill, 1964, Chapters 6 and 12; Sections 7.1 through 7.5
16. *The Feynman Lectures on Physics*, Volume I, R. P. Feynman, R. B. Leighton, and M. L. Sands. Reading, Mass.: Addison-Wesley, 1963, Chapters 9, 10, and 18
17. *Source Book in Physics*, W. F. Magie. Cambridge, Mass.: Harvard University Press, 1963, page 1, Galileo; page 30, Newton
18. *Foundations of Modern Physical Science*, Gerald Holton and D. H. D. Roller. Reading, Mass.: Addison-Wesley, 1958, Chapters 16 and 17

Problems

7.1 A particle of mass 3.2 kg is moving due west with a velocity of 6.0 m s^{-1}. Another particle of mass 1.6 kg is moving due north with a velocity of 5.0 m s^{-1}. The two particles are interacting. After 2 s the first particle is moving in the direction N 30° E with a velocity of 3.0 m s^{-1}. Find: (a) the magnitude and direction of the velocity of the other particle, (b) the total momentum of the two particles, both at the beginning and after the 2 s have elapsed, (c) the change in momentum of each particle, (d) the change in velocity of each particle, and (e) the magnitudes of these changes in velocity; verify Eq. (7.9).

7.2 A log whose mass is 45 kg is floating downstream at a constant velocity of 8 km hr^{-1}. A 10-kg swan attempts to land on the log while flying at a rate of 8 km hr^{-1} in the upstream direction. The swan slides the length of the log and falls off the end with a velocity of 2 km hr^{-1}. Calculate the final velocity of the log. Neglect water friction. Is it necessary to convert the velocities to m s^{-1}?

7.3 In the chemical reaction H + Cl → HCl, the H atom initially was moving to the right with a velocity of 1.57×10^5 m s^{-1}, while the Cl atom was moving in a perpendicular direction with a velocity of 3.4×10^4 m s^{-1}. Find the magnitude and direction (relative to the original motion of the H atom) of the resulting HCl molecule. Use the atomic masses of Table A–1.

7.4 Write an equation expressing the conservation of momentum in the chemical reaction A + BC → AB + C.

7.5 A particle whose mass is 0.2 kg is moving at 0.4 m s^{-1} along the X-axis when it collides with another particle, of mass 0.3 kg, which is at rest. After the collision the first particle moves at 0.2 m s^{-1} in a direction making an angle of 40° with the X-axis. Determine (a) the magnitude and direction of the velocity of the second particle after the collision, and (b) the change in the velocity and the momentum of each particle. (c) Verify relation (7.9).

7.6 Find the momentum acquired by a mass of 1 gm, 1 kg, and 10^6 kg when each falls through a distance of 100 m. Since the momentum acquired by the earth is equal and opposite, determine the velocity (upward) acquired by the earth. The mass of the earth is listed in Table 13–1. Determine the magnitude of the force in each case.

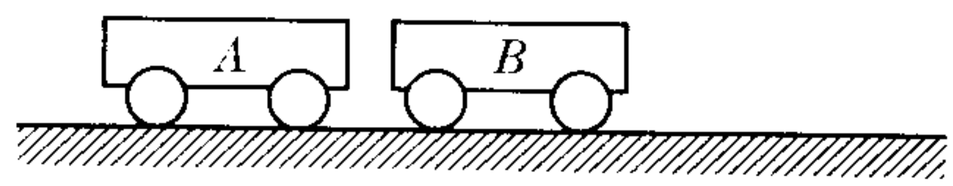

Figure 7–29

7.7 Two carts, A and B, are pushed toward each other (Fig. 7–29). Initially B is at rest, while A moves to the right at 0.5 m s^{-1}. After they collide, A rebounds at 0.1 m s^{-1}, while B moves to the right at 0.3 m s^{-1}. In a second experiment, A is loaded with a mass of 1 kg and pushed against B with a velocity of 0.5 m s^{-1}. After the collision, A remains at rest, while B moves to the right at 0.5 m s^{-1}. Find the mass of each cart.

7.8 Consider the earth-moon system (ignore the motion of this system around the sun). In 28 days, the moon rotates about the earth in a circle of radius 4.0×10^8 m. (a) What is the change in the momentum of the moon in 14 days? (b) What must be the change in momentum of the earth in 14 days? (c) Is the earth stationary in the earth-moon system? (d) The mass of the earth is 80 times that of the moon. What is the change in velocity of the earth in 14 days?

7.9 Two objects, A and B, which are moving without friction in a horizontal line, interact. The momentum of A is $p_A = p_0 - bt$, where p_0 and b are constants and t is the time. Find the momentum of B as a function of time if: (a) B is initially at rest and (b) the initial momentum of B was $-p_0$.

7.10 A grenade moving horizontally at 8 km s^{-1} relative to the earth explodes into three equal fragments. One continues to move horizontally at 16 km s^{-1}, another moves upward at an angle of 45° and the third moves at an angle of 45° below the horizontal. Find the magnitude of the velocities of the second and third fragment.

7.11 A satellite is moving "horizontally" at a velocity of 8 km s^{-1} relative to the earth. We wish to drop a 50-kg load straight down toward the earth by ejecting it horizontally from the satellite. Calculate the velocity of the satellite after the ejection of the load if the total mass (including the load) is 450 kg. (What is the load's velocity, relative to the earth, immediately after ejection?)

7.12 An empty railroad car of mass 10^5 kg coasts with a velocity of 0.5 m s^{-1} beneath a stationary coal hopper. If 2×10^5 kg of coal are dumped into the car as it passes beneath the hopper, then: (a) What is the car's final velocity? (b) What will be the car's velocity if the coal is allowed to leave the car through bottom hoppers and the coal falls straight down relative to the car? (c) Suppose that it were possible to throw all the coal at one time out the rear of the car so that the coal would be at rest relative to the earth. Calculate the resultant velocity of the car under such circumstances. (d) Under what conditions would the result be the same as in (c) if the coal were thrown off at an angle relative to the car's motion?

7.13 A cart having a mass of 1.5 kg moves along its track at 0.20 m s^{-1} until it runs into a fixed bumper at the end of the track. What is its change in momentum and the average force exerted on the cart if, in 0.1 s, it: (a) is brought to rest, (b) rebounds with a velocity of 0.10 m s^{-1}? Discuss the conservation of momentum in the collision.

7.14 What constant force is needed in order to increase the momentum of a body from 2300 kg m s^{-1} to 3000 kg m s^{-1} in 50 s?

7.15 An automobile has a mass of 1500 kg and its initial speed is 60 km hr^{-1}. When the brakes are applied to produce a constant deceleration, the car stops in 1.2 min. Determine the force applied to the car.

7.16 How long a time should a constant force of 80 N act on a body of 12.5 kg in order to stop it, providing that the initial velocity of the body is 72 km hr^{-1}?

7.17 A body with a mass of 10 g falls from a height of 3 m onto a pile of sand. The body penetrates the sand a distance of 3 cm before stopping. What force has the sand exerted on the body?

7.18 Two mules are pulling a barge up a canal by ropes tied to the prow of the barge. The angle between the ropes is 40° and the tension in the ropes is 2500 N and 2000 N, respectively. (a) Given that the mass of the barge is 1700 kg, what would its acceleration be if the water offered no resistance? (b) If the barge moves with uniform motion, what is the resistance of the water?

7.19 A man is standing on the flat bed of a truck moving at the speed of 36 km hr^{-1}. At what angle, and in which direction, should the man lean to avoid falling if, in 2 s, the speed of the truck changes to (a) 45 km hr^{-1}, (b) 9 km hr^{-1}?

7.20 An elevator whose mass is 250 kg is carrying three persons whose masses are 60 kg, 80 kg, and 100 kg, and the force exerted by the motor is 5000 N. With what acceleration will the elevator rise? Starting from rest, how high will it go in 5 s?

7.21 Suppose that the 100-kg man in the previous problem is standing on a scale. How much does he "weigh" as the elevator accelerates?

7.22 An empty elevator having a mass of 5000 kg is moving vertically downward with a constant acceleration. Starting from rest, it moves 100 ft during the first 10 s. Calculate the tension in the cable holding the elevator.

7.23 A boy whose mass is 60 kg is standing on a scale. If he suddenly pushes him-

self up with an acceleration of 245 cm s^{-2}, what will the scale read? Discuss the effect associated with this problem as it applies to a machine that measures the acceleration of the body by measuring the force exerted. (Such a machine, called an *accelerometer*, is an extremely useful tool in industry and research laboratories.)

7.24 A 200-gm mass is moving with a constant velocity $\boldsymbol{v} = \boldsymbol{u}_x 50$ cm s^{-1}. When the mass is at $\boldsymbol{r} = -\boldsymbol{u}_x 10$ cm, a constant force $\boldsymbol{F} = -\boldsymbol{u}_x 400$ dyn is applied to the body. Determine: (a) the time for the mass to stop, and (b) the position of the mass at the instant it stops.

7.25 A man whose mass is 90 kg is in an elevator. Determine the force the floor exerts on him when: (a) the elevator goes *up* with uniform speed, (b) the elevator goes *down* with uniform speed, (c) the elevator *accelerates upward* at 3 m s^{-2}, (d) the elevator *accelerates downward* at 3 m s^{-2}, and (e) the cable breaks and the elevator falls freely.

7.26 A body whose mass is 2 kg is moving on a smooth horizontal surface under the action of a horizontal force $F = 55 + t^2$, where F is in newtons and t in seconds. Calculate the velocity of the mass when $t = 5$ s (the body was at rest when $t = 0$).

7.27 A body of mass m is moving along the X-axis according to the law $x = A \cos(\omega t + \phi)$, where A, ω, and ϕ are constants. Calculate the force acting on the body as a function of its position. What is the direction of the force when x is (a) positive, (b) negative?

7.28 The resultant force on an object of mass m is $F = F_0 - kt$, where F_0 and k are constants and t is the time. Find the acceleration. By integration, find the velocity and position equations.

7.29 A particle of mass m, initially at rest, is acted on by a force $F = F_0 [1 - (t - T)^2/T^2]$ during the interval $0 \leq t \leq 2T$. Prove that the velocity of the particle at the end of the interval is $4F_0T/3m$. Note that it depends only on the product $F_0(2T)$ and, if T is made smaller, the same velocity is attained by making F_0 proportionately larger. Make a plot of F against t. Can you think of some physical situation of which this problem could be an adequate description?

7.30 A body which is initially at rest at x_0 moves in a straight line under the action of a force $F = -K/x^2$. Show that its velocity at x is $v^2 = 2(K/m)(1/x - 1/x_0)$. This method can be used to determine the velocity of a body falling toward the earth from a great height.

7.31 Repeat Example 7.3 for the case of a car moving downhill.

7.32 A body with a mass of 1.0 kg is on a smooth plane inclined at an angle of 30° with the horizontal. With what acceleration will the body move if there is a force of 8.0 N applied parallel to the plane and directed (a) upward, (b) downward.

7.33 A truck of mass 5000 kg is traveling north at 30 m s^{-1} when, in 20 s, it turns into a road N 70° E. Find (a) its change in momentum, (b) the magnitude and direction of the average force exerted on the truck.

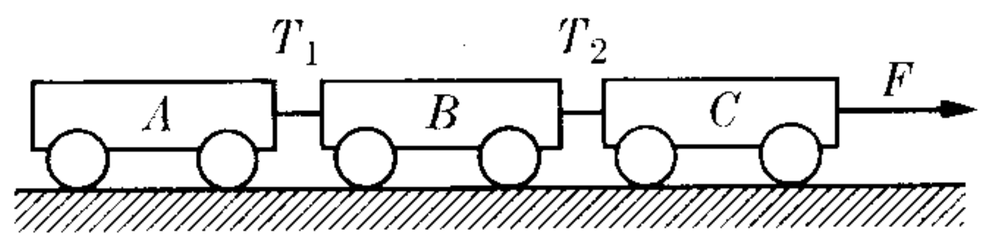

Figure 7–30

7.34 The bodies in Fig. 7–30 have masses 10 kg, 15 kg, and 20 kg, respectively. A force F, equal to 50 N, is applied to C. Find the acceleration of the system and the tensions in each cable. Discuss the same problem when the system moves vertically instead of horizontally.

7.35 Calculate the acceleration of the bodies in Fig. 7–31 and the tension in the string. First solve the problem algebraically and apply to the case $m_1 = 50$ g, $m_2 = 80$ g, and $F = 10^5$ dyn.

7.36 The bodies in Fig. 7–32 are connected by a string as shown. Assuming that the pulleys are smooth, calculate the accelera-

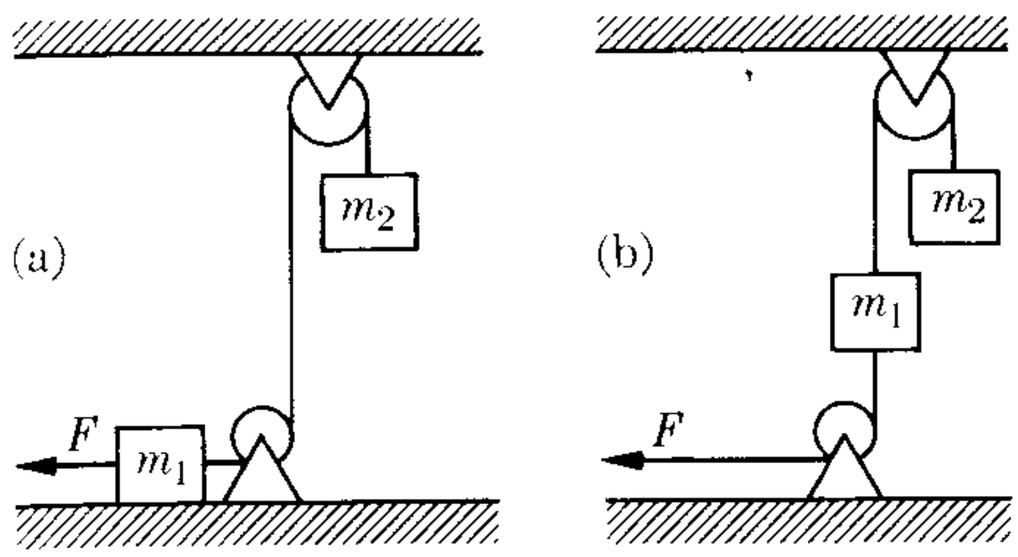

Figure 7–31

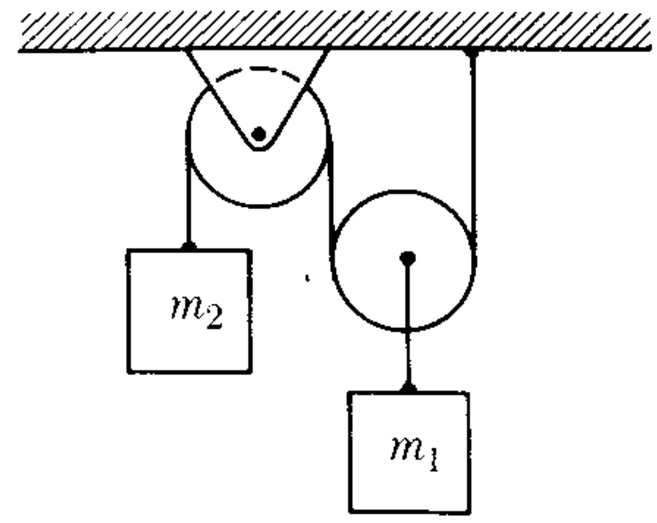

Figure 7–32

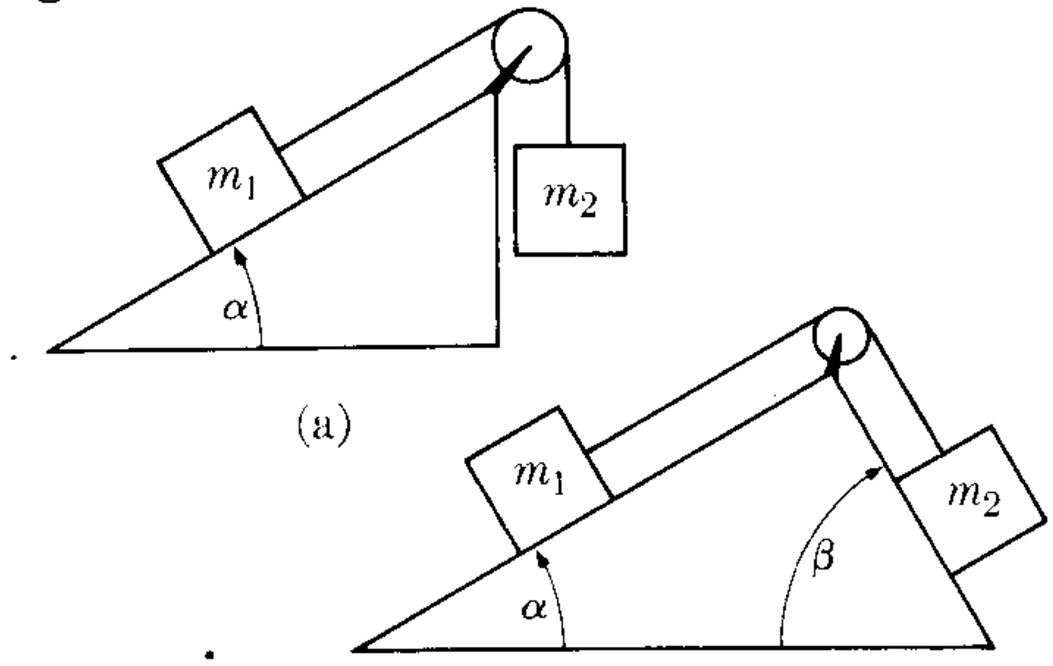

Figure 7–33

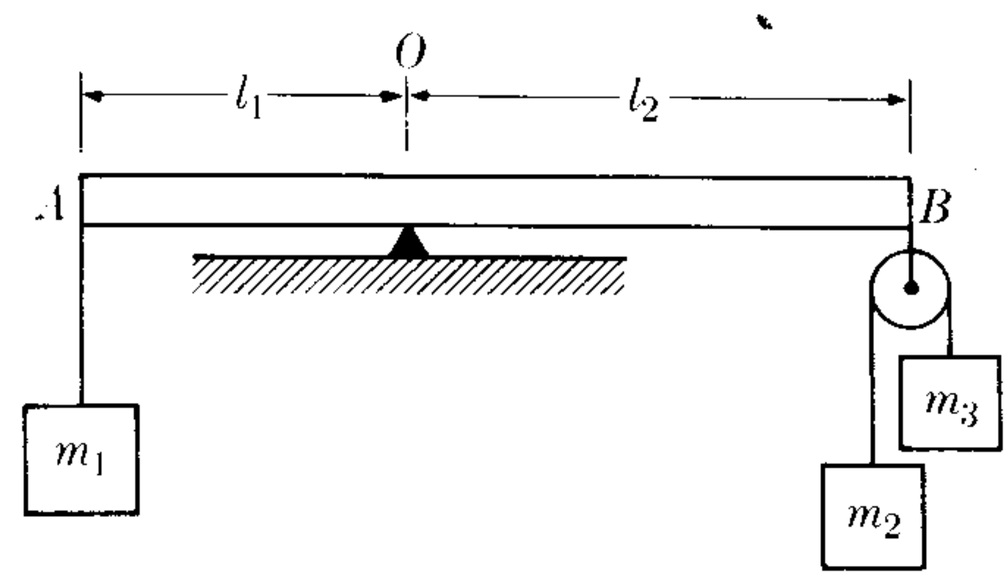

Figure 7–34

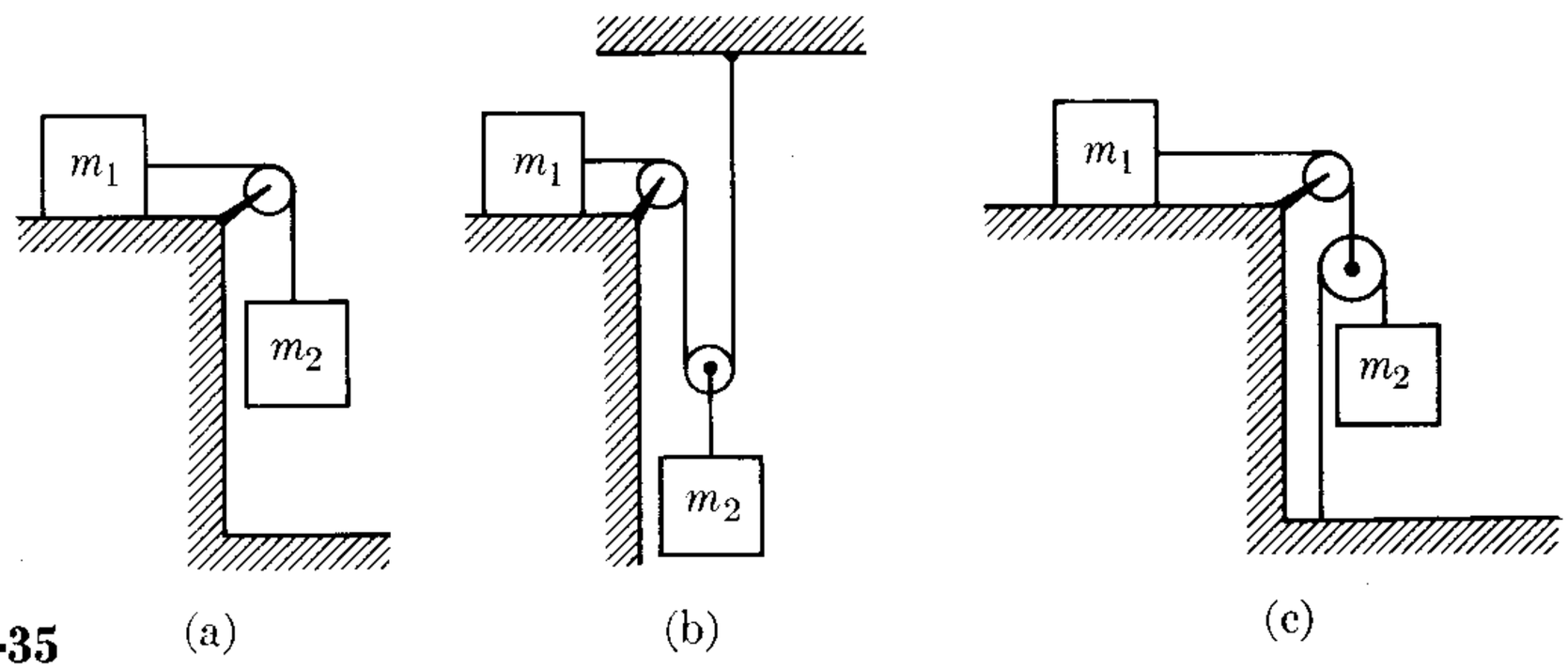

Figure 7–35

tion of the bodies and the tension in the string. Solve the problem algebraically first, and apply to the case $m_1 = 8$ kg, $m_2 = 2$ kg.

7.37 Determine the acceleration with which the bodies in Fig. 7–33(a) and (b) move, and also the tensions in the strings. Assume that the bodies slide without friction. Solve the problem generally first, and then apply to the case $m_1 = 200$ g, $m_2 = 180$ g, $\alpha = 30°$, $\beta = 60°$.

7.38 Repeat the above problem when there is friction, with coefficients f_1 on the first surface and f_2 on the second. Discuss all possible motions.

7.39 (a) Prove that the beam AB in Fig. 7–34 will be in equilibrium under the condition that the following equation holds:

$$m_1(m_2 + m_3)l_1 = 4m_2m_3l_2.$$

(b) Find the force that the pivot point exerts on the bar.

7.40 Calculate the acceleration of the bodies m_1 and m_2 and the tension in the ropes (Fig. 7–35). All pulleys are weightless and frictionless and the bodies slide without friction. Which device may accelerate m_1 faster than in free fall? Solve first algebraically; then apply to the case $m_1 = 4$ kg, $m_2 = 6$ kg.

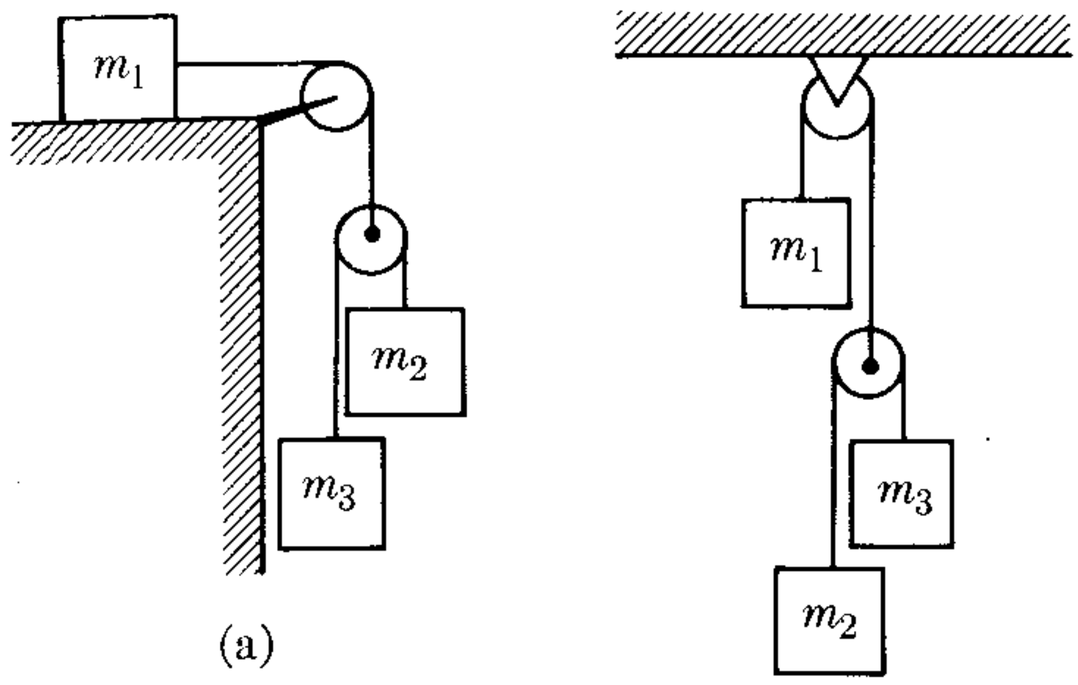

Figure 7–36

7.41 Show that the accelerations of the bodies in Fig. 7–36, with

$$P = g/(m_1m_2 + m_1m_3 + 4m_2m_3),$$

are

(a) $a_1 = 4m_2m_3P,$
$a_2 = (m_1m_3 - m_1m_2 - 4m_2m_3)P,$
$a_3 = (m_1m_3 - m_1m_2 + 4m_2m_3)P;$
(b) $a_1 = (4m_2m_3 - m_1m_2 - m_1m_3)P,$
$a_2 = (3m_1m_3 - m_1m_2 - 4m_2m_3)P,$
$a_3 = (m_1m_3 - 3m_1m_2 + 4m_2m_3)P.$

7.42 The masses of A and B in Fig. 7–37 are 3 kg and 1 kg, respectively. If an upward force $F = 5t^2$N is applied to the pulley, find the acceleration of A and B as functions of t. What happens after B reaches the pulley?

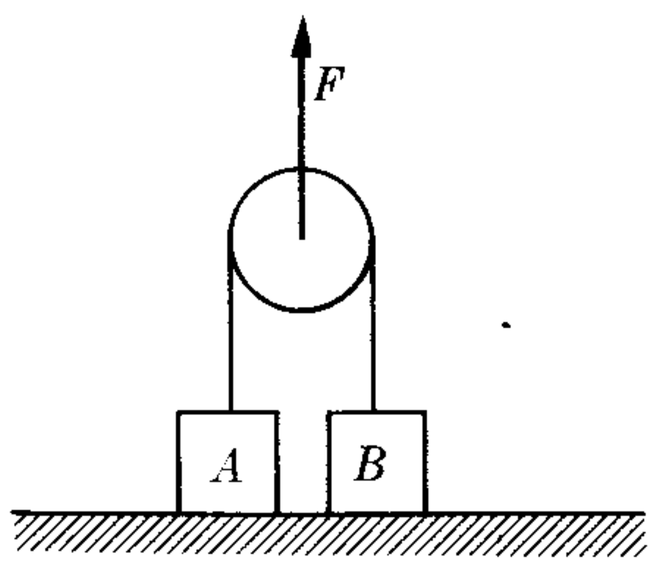

Figure 7–37

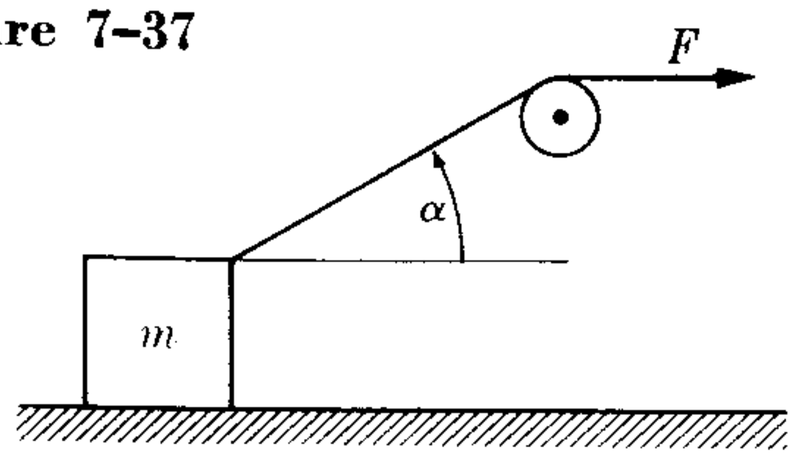

Figure 7–39

7.43 The masses of A and B in Fig. 7–38 are, respectively, 10 kg and 5 kg. The coefficient of friction of A with the table is 0.20. Find the minimum mass of C that will prevent A from moving. Compute the acceleration of the system if C is lifted up.

7.44 Determine the frictional force exerted by the air on a body whose mass is 0.4 kg if it falls with an acceleration of 9.0 m s^{-2}.

7.45 Repeat Example 7.6 for a case in which there is no applied force. The initial velocity of the body is 2 m s^{-1} up the plane. How far up the plane will the body move before it stops? What is the *least* value for the coefficient of static friction so that the body, once stopped, will not come back down?

7.46 A block of mass 0.2 kg starts up a plane inclined 30° with the horizontal with a velocity of 12 m s^{-1}. If the coefficient of sliding friction is 0.16, determine how far up the plane the block travels before stopping. What is the block's speed when (if) it returns to the bottom of the plane?

7.47 A train having a mass of 100 tons is going up an incline that rises 1 ft per 224 ft of length. The traction of the train is 9000 lbf and its acceleration is 1 ft s^{-2}. Calculate the force of friction.

7.48 Find the acceleration of m in Fig. 7–39 if the coefficient of friction with the floor is

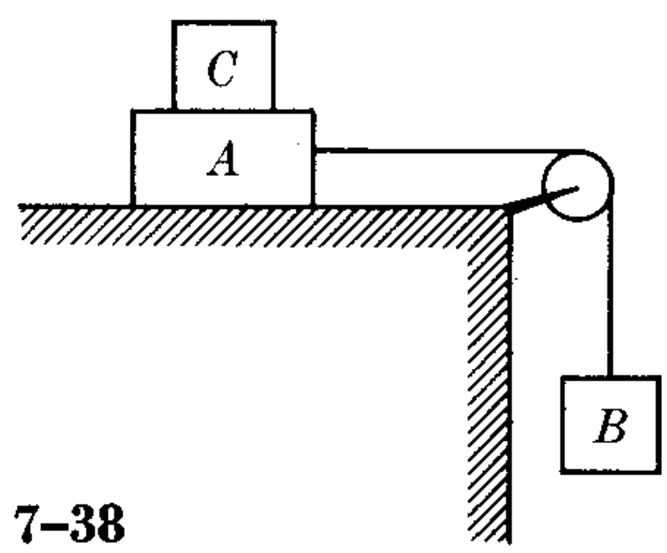

Figure 7–38

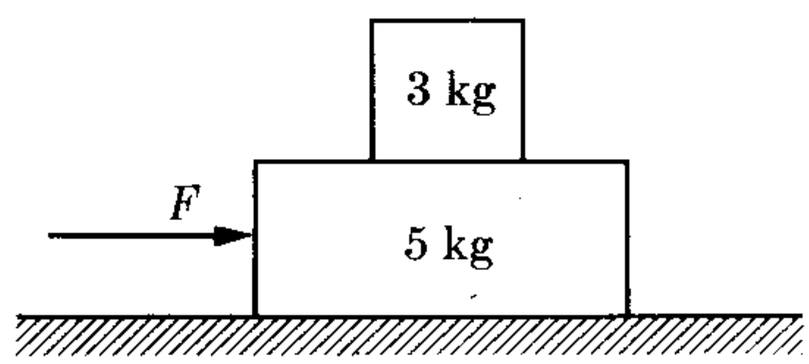

Figure 7–40

f. Find also the force exerted by the floor on the body. Apply to $m = 2.0$ kg, $f = 0.2$, and $F = 1.5$ N.

7.49 A block of mass 3 kg is placed on top of another block of mass 5 kg (Fig. 7–40). Assume that there is no friction between the 5-kg block and the surface on which it rests. The coefficients of static and sliding friction between the blocks are 0.2 and 0.1, respectively. (a) What is the maximum force that may be applied to either block to slide the system and still keep the blocks together? (b) What is the acceleration when the maximum force is applied? (c) What is the acceleration of the 3-kg block if the force is larger than the above maximum force and is applied to the 5-kg block? What if it is applied to the 3-kg block?

7.50 Find the limiting velocity of a sphere having a radius of 2 cm and a density 1.50 g cm^{-3} falling through glycerine (density = 1.26 g cm^{-3}). Also find the velocity of the sphere when its acceleration is 100 cm s^{-2}.

7.51 A body having a mass of 45 kg is launched vertically with an initial velocity of 60 m s^{-1}. The body encounters an air resistance $F = -3v/100$, where F is in newtons and v is the velocity of the body in m s^{-1}. Calculate the time from launch to the maximum altitude. What is the maximum altitude?

7.52 A body falls from a height of 108 m in 5 s, starting from rest. Find its limiting velocity if the resistance is proportional to the velocity.

7.53 Using the results of Example 7.8, find the time it takes the raindrops of Example 7.7 to reach 0.50 and 0.63 of its limiting velocity. Also find the distance covered in the time τ.

7.54 Plot the velocity of a body falling through a viscous fluid as a function of t when the initial velocity is not zero. Consider both when v_0 is smaller and larger than $F/K\eta$. What happens when $v_0 = F/K\eta$?

7.55 The electron in a hydrogen atom revolves around the proton, following an almost circular path of radius 0.5×10^{-10} m with a velocity which is estimated to be about 2.2×10^6 m s^{-1}. Estimate the magnitude of the force between the electron and the proton.

7.56 A stone whose mass is 0.4 kg is tied to the end of an 0.8-m rope. If the stone is spun in a circle at the rate of 80 rev/min, what is the magnitude of the force the rope exerts on the stone? If the rope breaks when the tension is greater than 50 kgf, what is the largest possible angular velocity of the stone?

7.57 A small block with a mass of 1 kg is tied to a rope 0.6 m and is spinning at 60 rev/min in a vertical circle. Calculate the tension in the rope when the block is (a) at the highest point of the circle, (b) at the lowest point, (c) when the rope is horizontal. (d) Calculate the linear velocity the block must have at the highest point in order for the tension in the rope to be zero.

7.58 A train rounds a banked curve at 63 km hr^{-1}. The radius of the curve is 300 m. Calculate: (a) the degree of banking the curve must have in order that the train will experience no sideways forces, (b) the angle a chain hanging from the ceiling of one of the cars makes with the vertical.

7.59 A highway is 24 ft wide. Calculate the difference in level between the external and internal edges of the road in order for a car to be able to travel at 50 mi hr^{-1} (without experiencing sideways forces) around a curve whose radius is 2000 ft.

7.60 A highway curve whose radius is 1000 ft is *not* banked. Assume that the coefficient of friction between rubber and dry asphalt is 0.75, between rubber and wet asphalt is 0.50, and between rubber and ice is 0.25. Determine the maximum safe speed for traversing the curve on (a) dry days, (b) rainy days, (c) icy days. Why are these values independent of the car's mass?

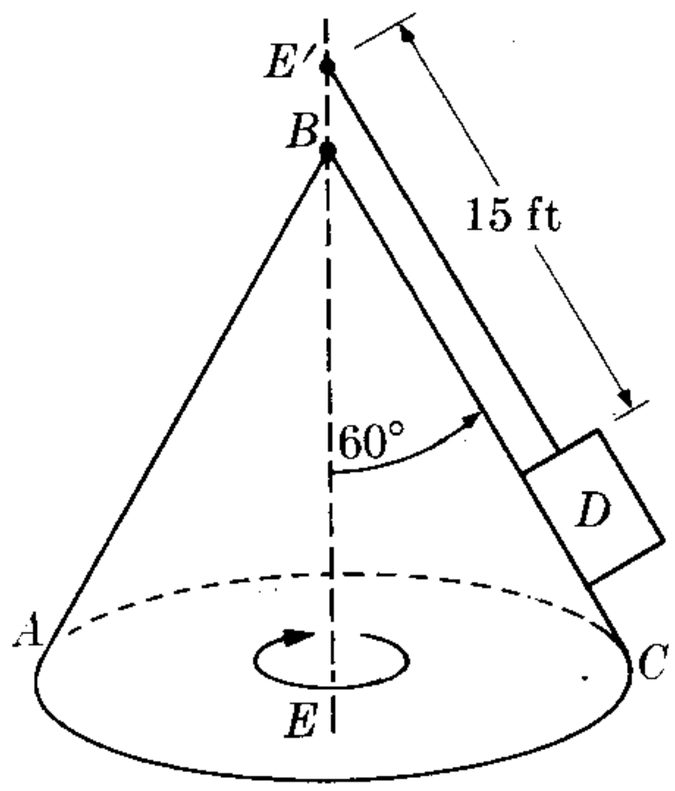

Figure 7–41

7.61 A body D which has a mass of 12 lb (Fig. 7–41) is on a smooth conical surface ABC, and is spinning about the axis EE' with an angular velocity of 10 rev/min. Calculate: (a) the linear velocity of the body, (b) the reaction of the surface on the body, (c) the tension in the thread, and (d) the angular velocity necessary to reduce the reaction of the plane to zero.

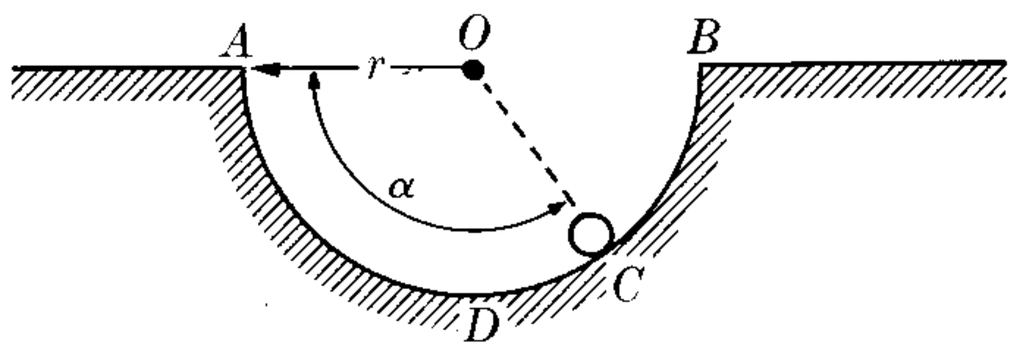

Figure 7–42

7.62 A small ball of mass m, initially at A, slides on the smooth circular surface ADB (Fig. 7–42). When the ball is at the point C, show that the angular velocity and the force exerted by the surface are $\omega = \sqrt{2g \sin \alpha / r}$, $F = mg(1 + 2 \sin \alpha)$.

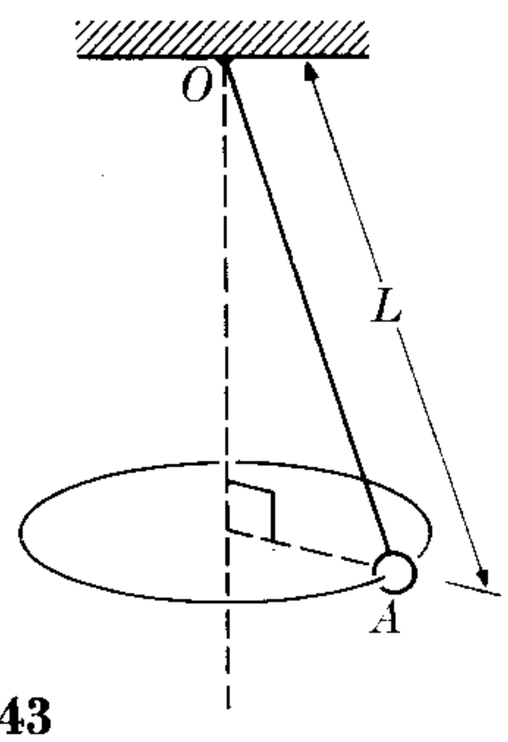

Figure 7–43

7.63 Referring to the conical pendulum of Fig. 7–43 rotating in a horizontal circle with an angular velocity ω, calculate the tension in the rope and its angle with respect to the vertical for the case when $M = 12$ kg, $L = 1.16$ m and $\omega = 30$ rad s^{-1}.

7.64 Show that the periods of two conical pendulums hung from the same ceiling and having different lengths, but moving so that both bobs are at the same height above the floor, are equal.

7.65 A particle of density ρ_1 is suspended in a rotating liquid of density ρ_2. Prove that the particle will spiral outward (inward) if ρ_1 is greater (smaller) than ρ_2.

7.66 Prove that if a body moves under the action of a force $F = k\boldsymbol{u} \times \boldsymbol{v}$, where $\boldsymbol{u}$ is an arbitrary unit vector, the motion is circular with angular velocity $\boldsymbol{\omega} = k\boldsymbol{u}$ or, in a more general case, a spiral parallel to $\boldsymbol{u}$.

7.67 At $t = 0$, a body of mass 3.0 kg is located at $\boldsymbol{r} = \boldsymbol{u}_x\ 4$ m, with a velocity $\boldsymbol{v} = (\boldsymbol{u}_x + \boldsymbol{u}_y\ 6)$ m s^{-1}. If a constant force $\boldsymbol{F} = \boldsymbol{u}_y\ 5$ N acts on the particle, find (a) the change in the (linear) momentum of the body after 3 s, (b) the change in the angular momentum of the body after 3 s.

7.68 A ball of mass 200 gm is moving due north with a velocity of 300 cm s^{-1}. When a force of 2000 dyn in the due-east direction is applied, obtain the equation of the trajectory and calculate after 40 s: (a) the magnitude and direction of the velocity, (b) the distance from the initial point, (c) the displacement from the initial point.

7.69 A particle moving with a velocity v_0 along the X-axis is acted on by a force F parallel to the Y-axis while moving in the region $0 \leq x \leq L$. Find the change in its direction of motion. At what distance from the X-axis will the particle strike a wall placed at $x = L$?

7.70 A point mass is moving in the XY-plane under the action of a constant force whose components are $F_x = 6$ N and $F_y =$

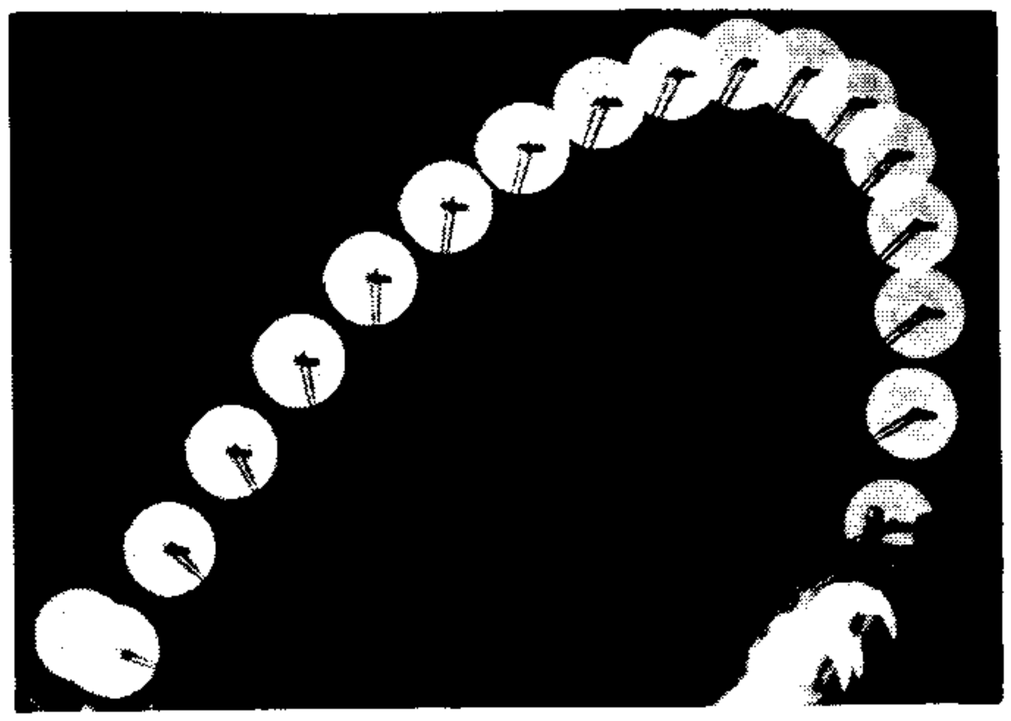

Figure 7–44

-7 N. When $t = 0$ s, $x = 0$, $y = 0$, $v_x = -2$ m s^{-1}, and $v_y = 0$; find the position and velocity when $t = 2$ s. Assume that the mass of the particle is 16 kg.

7.71 The position vector of a body of mass 6 kg is given as: $\boldsymbol{r} = \boldsymbol{u}_x(3t^2 - 6t) + \boldsymbol{u}_y(-4t^3) + \boldsymbol{u}_z(3t + 2)$ m. Find: (a) the force acting on the particle, (b) the torque, with respect to the origin, acting on the particle, (c) the momentum and angular momentum of the particle with respect to the origin. (d) Verify that $\boldsymbol{F} = d\boldsymbol{p}/dt$ and $\boldsymbol{\tau} = d\boldsymbol{L}/dt$.

7.72 At $t = 0$ s, a 3-kg mass is located at $\boldsymbol{r} = \boldsymbol{u}_x$ 5 m and has a velocity of $\boldsymbol{u}_y$ 10 m s^{-1}. There are no forces acting on the mass. Determine the angular momentum of the mass with respect to the origin at (a) $t = 0$ s and (b) $t = 12$ s.

7.73 One end of a rubber band has a disk attached to it; the other end of the band is fixed. The disk can move on a frictionless horizontal table. If the rubber band is extended and the disk is pushed at an angle, it describes the path shown in the multiflash photograph in Fig. 7–44 (the time interval between flashes is 0.5 s). By actual measurement on the photograph, show that the law of areas holds for this motion. From the physical situation described, is the force on the disk central?

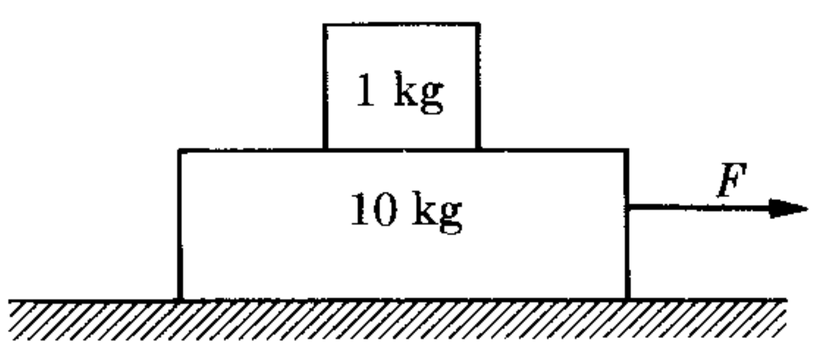

Figure 7–45

7.74 A 1-kg mass rests on a 10-kg mass, which in turn rests on a horizontal surface, as shown in Fig. 7–45. The force F varies with time t (measured in seconds), such that $F = 0.2t$ N. If the coefficient of static friction is 0.2 and the coefficient of sliding friction is 0.15 between all surfaces, find the motion of each block as a function of time.

7.75 When the earth is at aphelion (the position at which it is farthest away from the sun), June 21, its distance is 1.52×10^{11} m and its orbital velocity is 2.93×10^4 m s^{-1}. Find its orbital velocity at perihelion (the position at which it is closest to the sun) about six months later, when its distance from the sun is 1.47×10^{11} m. Do these variations in velocity affect the duration of the solar day? Also find the angular velocity of the earth about the sun for both cases. [*Hint:* both at aphelion and at perihelion the velocity is perpendicular to the radius vector.]

7.76 A 10^3-kg rocket is set vertically on its launching pad. The propellant is expelled at the rate of 2 kg s^{-1}. Find the minimum velocity of the exhaust gases so that the rocket just begins to rise. Also find the rocket's velocity 10 s after ignition, assuming the minimum exhaust velocity.

7.77 A rocket, launched vertically, expels mass at a constant rate equal to $5 \times 10^{-2} m_0$ kg s^{-1}, where m_0 is its initial mass.

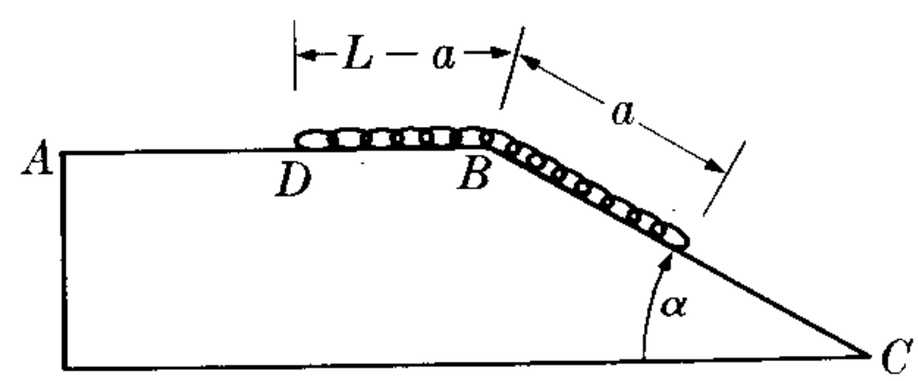

Figure 7–46

The exhaust velocity of the gases relative to the rocket is 5×10^3 m s^{-1}. Find the velocity and the height of the rocket after 10 s.

7.78 A flexible chain of length L and weight W (Fig. 7–46) is initially placed at rest on a smooth frictionless surface ABC, with D the distance $L - a$ from B. Prove that when the end D arrives at the point B the velocity of the chain is $v = \sqrt{(g/L)(L^2 - a^2)\sin\alpha}$.

7.79 A uniform rope of mass M and length L (Fig. 7–47) passes over a smooth peg of very small radius. When the motion starts, $BC = b$. Show that the acceleration and velocity when $BC = \frac{2}{3}L$ are $a = g/3$, $v = \sqrt{2g/L(\frac{8}{3}L^2 + 2bL - b^2)}$. Apply your results to $L = 12$ ft, $b = 7$ ft.

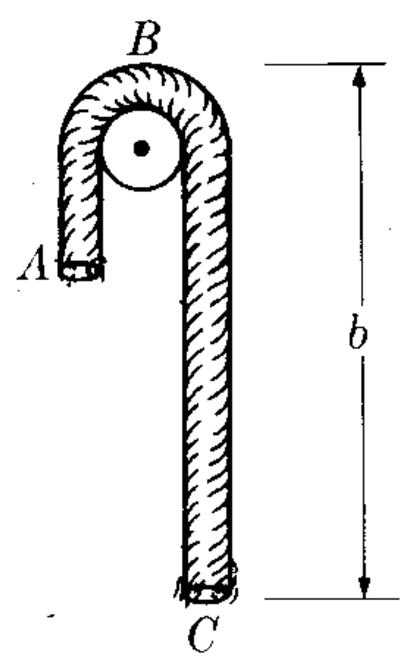

Figure 7–47

7.80 A mass M, attached to an end of a very long chain having a mass m per unit length, is thrown vertically upward with an initial velocity v_0. Show that the maximum height reached by M is $h = (M/m)[\sqrt[3]{1 + 3mv_0^2/2Mg} - 1]$, and that the velocity of M when it returns to the ground is $v = \sqrt{2gh}$.

7.81 Water vapor condenses on a raindrop at the rate of m mass units per unit time; the drop initially has a mass M and starts from rest. Show that the distance it falls in time t is $\frac{1}{2}g\{\frac{1}{2}t^2 + (M/m)t - (M^2/m^2) \ln[1 + (m/M)t]\}$. Neglect the resistance due to the air.

7.82 A particle moves under a constant force through a fluid resisting the motion with a force proportional to the velocity. Show that, if the force is cut off after the particle reaches the limiting velocity, the velocity at time t will be $v = v_L e^{-(k/m)t}$ and the distance moved will be $x = (m/k)v_L[1 - e^{-(k/m)t}]$. Verify that the distance moved before stopping is $v_L(m/k)$. Show that the velocity of the particle will reduce to $1/e$ of its value after the time $t = m/k$.

7.83 A body moves under the action of a constant force F through a fluid which opposes the motion with a force proportional to the square of the velocity; that is, $F_f = -kv^2$. Show that the limiting velocity is $v_L = \sqrt{F/k}$. Prove that the relationship between the velocity and the distance is $v^2 = (F/k) + [v_0^2 - (F/k)]e^{-2(k/m)x}$. Plot v^2 against x for $v_0 = 0$. If the force is suppressed after the body reaches the limiting velocity, show that the velocity of the particle will fall to $1/e$ of the limiting velocity after traversing the distance m/k.

7.84 Prove that when a body is in motion under a resisting force proportional to the square of the velocity, the velocity at time t is:

$$v = v_L \frac{(v_0 + v_L)e^{(kv_L/m)t} + (v_0 - v_L)e^{-(kv_L/m)t}}{(v_0 + v_L)e^{(kv_L/m)t} - (v_0 - v_L)e^{-(kv_L/m)t}}.$$

8
WORK AND ENERGY

8.1 Introduction
8.2 Work
8.3 Power
8.4 Units of Work and Power
8.5 Kinetic Energy
8.6 Work of a Force Constant in Magnitude and Direction
8.7 Potential Energy
8.8 Conservation of Energy of a Particle
8.9 Rectilinear Motion under Conservative Forces
8.10 Motion under Conservative Central Forces
8.11 Discussion of Potential Energy Curves
8.12 Nonconservative Forces
8.13 The Virial Theorem for a Single Particle
8.14 Critique of the Concept of Energy

8.1 Introduction

In this chapter we shall continue to discuss various aspects of the dynamics of a particle. Accordingly, we shall observe only one particle, and reduce its interactions with the rest of the universe to a single term which we have called *force*. When we are solving the fundamental equation of the dynamics of a particle (that is, $\boldsymbol{F} = d\boldsymbol{p}/dt$), we can always perform a first integration if we know the force as a function of time, because from this equation we obtain by integration

$$\int_{\boldsymbol{p}_0}^{\boldsymbol{p}} d\boldsymbol{p} = \int_{t_0}^{t} \boldsymbol{F}\, dt$$

or

$$\boldsymbol{p} - \boldsymbol{p}_0 = \int_{t_0}^{t} \boldsymbol{F}\, dt = \boldsymbol{I}. \tag{8.1}$$

The quantity $\boldsymbol{I} = \int_{t_0}^{t} \boldsymbol{F}\, dt$ appearing on the right is called the *impulse*. Therefore, Eq. (8.1) tells us that

the change in momentum of the particle is equal to the impulse.

Since impulse is essentially force multiplied by time, a very strong force acting through a short time may produce the same change in momentum as a weaker force acting for a longer time. For example, when a batter hits a ball he produces a large force during a very short time, resulting in an appreciable change in the momentum of the ball. However, gravity, to produce an equivalent change in momentum, would have to act on the ball for a much longer time.

When we replace $\boldsymbol{p}$ by its equivalent $m\boldsymbol{v}$, it is possible to integrate again and obtain the position of the particle as a function of time. That is,

$$m\boldsymbol{v} - m\boldsymbol{v}_0 = \boldsymbol{I} \qquad \text{or} \qquad \boldsymbol{v} = \boldsymbol{v}_0 + \frac{1}{m}\boldsymbol{I}.$$

Recalling that $\boldsymbol{v} = d\boldsymbol{r}/dt$, we may write

$$\int_{\boldsymbol{r}_0}^{\boldsymbol{r}} d\boldsymbol{r} = \int_{t_0}^{t} \left(\boldsymbol{v}_0 + \frac{1}{m}\boldsymbol{I}\right) dt \qquad \text{or} \qquad \boldsymbol{r} = \boldsymbol{r}_0 + \boldsymbol{v}_0 t + \frac{1}{m}\int_{t_0}^{t} \boldsymbol{I}\, dt,$$

which gives $\boldsymbol{r}$ in terms of t, and thus formally solves the dynamical problem. In fact, in Example 7.5 we solved a problem of this type for the case of rectilinear motion.

However, in the important problems encountered in physics, the force on a particle is not known as a function of time but as a function of position given by $\boldsymbol{r}$ or x, y, z; that is, $\boldsymbol{F}(\boldsymbol{r})$ or $\boldsymbol{F}(x, y, z)$. Hence we cannot evaluate the integral appearing in Eq. (8.1) until we know x, y, and z as functions of time; that is, until we have solved the problem that we attempt to solve with Eq. (8.1)! To circumvent this apparent vicious circle we must resort to other mathematical techniques which will lead us to the definition of two new concepts: *work* and *energy*. These powerful methods will enable us to solve problems even in cases in which we do not know the force, but can make reasonable assumptions about its properties.

EXAMPLE 8.1. A ball whose mass is 0.1 kg is allowed to fall from a height of 2 m and, after hitting the floor, it bounces back up to a height of 1.8 m. Determine the impulse it received from gravity while it was falling and the impulse it received when it struck the floor.

Solution: We first use Eq. (5.12) to find the velocity of the particle when it arrives at the floor; that is, $v_1 = \sqrt{2gh_1}$, where $h_1 = 2$ m. Thus $v_1 = 6.26$ m s^{-1}. Since the velocity is directed downward, we must write $\boldsymbol{v}_1 = -\boldsymbol{u}_y(6.26 \text{ m s}^{-1})$. The initial momentum is zero, and thus the total change in momentum during the fall is $m\boldsymbol{v}_1 - 0 = -\boldsymbol{u}_y(0.626 \text{ kg m s}^{-1})$. This is the impulse due to gravity. We may also compute this impulse directly by using the definition $\boldsymbol{I} = \int_{t_0}^{t} \boldsymbol{F}\,dt$. In this case $t_0 = 0$ and $t = v_1/g = 0.639$ s. Also $\boldsymbol{F} = m\boldsymbol{g} = -\boldsymbol{u}_y mg = -\boldsymbol{u}_y(0.98 \text{ N})$. Thus direct calculation again gives $-\boldsymbol{u}_y(0.626 \text{ kg m s}^{-1})$ for the impulse due to gravity during the fall.

But when the ball hits the ground a new force acts during a very short time. We do not know the force, but we may obtain the impulse by computing the momentum of the ball when it bounces back. Since it goes to a height $h_2 = 1.8$ m, the velocity when it bounces back is $v_2 = \sqrt{2gh_2} = 5.94$ m s^{-1}, or in vector form $\boldsymbol{v}_2 = \boldsymbol{u}_y(5.94 \text{ m s}^{-1})$, since the body is moving upward. Thus the change in momentum is expressed by

$$\boldsymbol{p}_2 - \boldsymbol{p}_1 = m\boldsymbol{v}_2 - m\boldsymbol{v}_1 = \boldsymbol{u}_y(1.221 \text{ kg m s}^{-1}),$$

which also gives the impulse. Comparing this value with the result for free fall, and noting that the collision with the ground takes place in a very short time interval, we conclude that the force acting in this second case is much stronger. If we could measure the time interval, we could obtain the average force on the ball.

8.2 Work

Let us consider a particle A moving along a curve C under the action of a force $\boldsymbol{F}$ (Fig. 8–1). In a very short time dt it moves from A to A', the displacement being $\overrightarrow{AA'} = d\boldsymbol{r}$. The *work* done by the force $\boldsymbol{F}$ during that displacement is defined by the scalar product

$$dW = \boldsymbol{F} \cdot d\boldsymbol{r}. \tag{8.2}$$

Designating the magnitude of $d\boldsymbol{r}$ (that is, the distance moved) by ds, we may also write Eq. (8.2) in the form

$$dW = F\,ds \cos\theta, \tag{8.3}$$

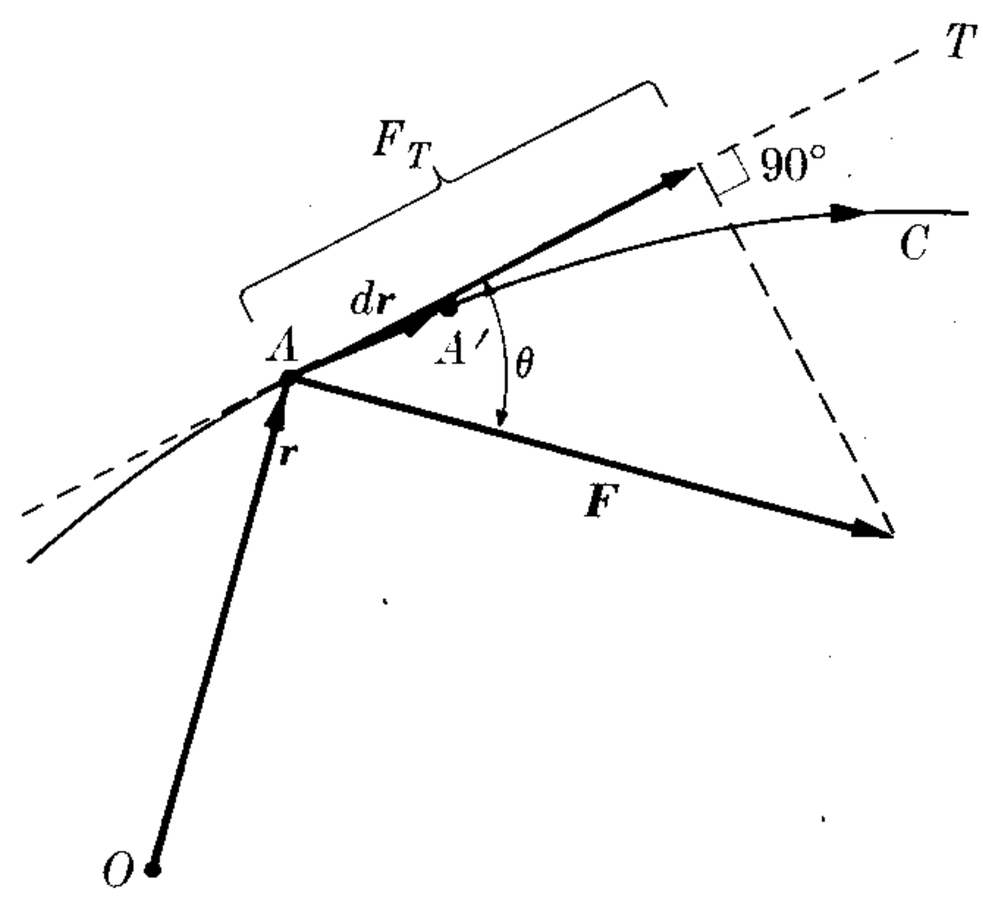

Fig. 8–1. Work is equal to displacement multiplied by the component of the force along the displacement.

where θ is the angle between the direction of the force $\boldsymbol{F}$ and the displacement $d\boldsymbol{r}$. Now $F \cos\theta$ is the component F_T of the force along the tangent to the path, so that

$$dW = F_T\,ds. \tag{8.4}$$

In words, we may express this by saying that

> *work is equal to the displacement times the component of the force along the displacement.*

Let us note that if a force is perpendicular to the displacement ($\theta = 90°$), the work done by the force is zero. For example, this is the case for the centripetal force $\boldsymbol{F}_N$ in circular motion (Fig. 8–2a), or the force of gravity $m\boldsymbol{g}$ when a body is moved on a horizontal plane (Fig. 8–2b).

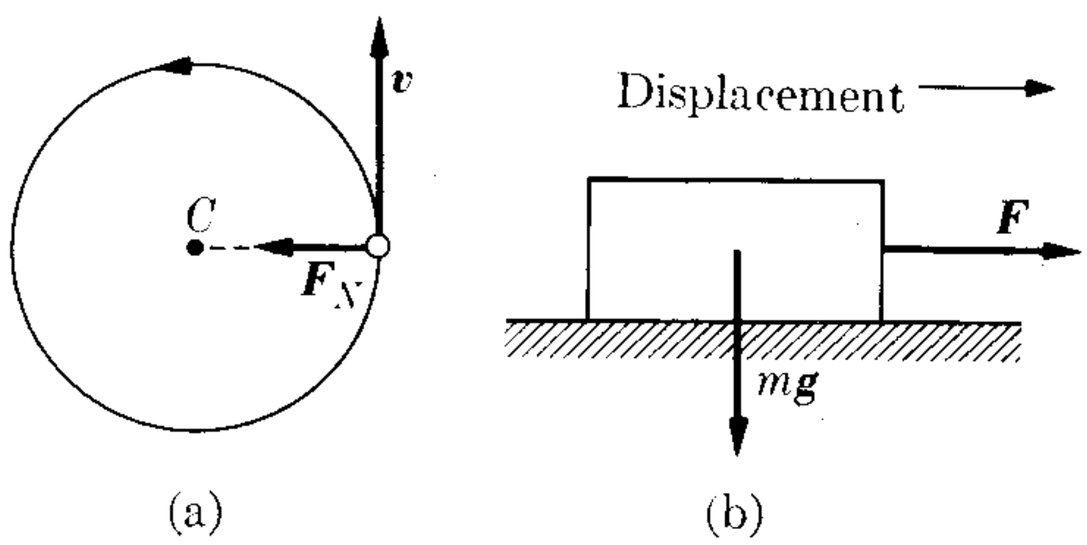

Fig. 8–2. Forces that do no work.

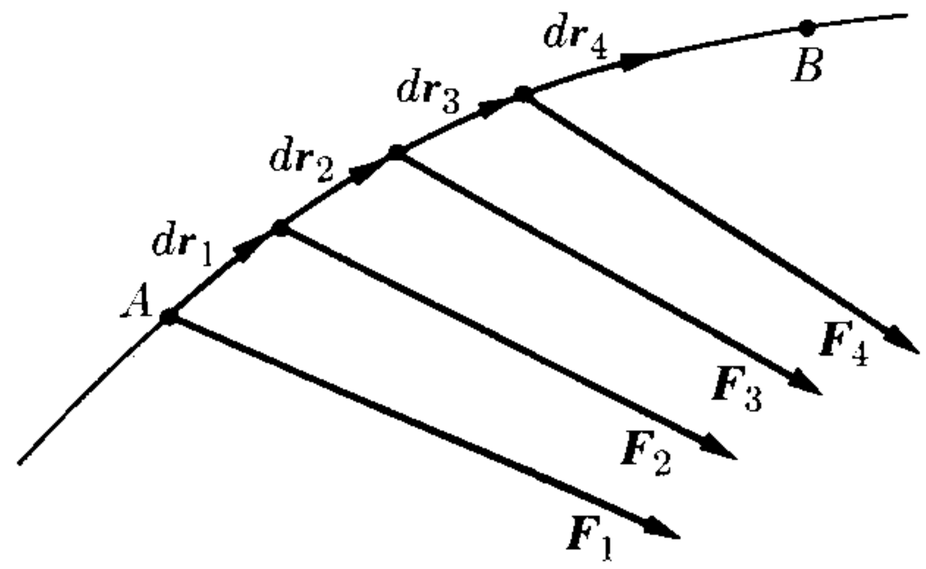

Fig. 8–3. The total work is the sum of many infinitesimal works.

Equation (8.2) gives the work for an infinitesimal displacement. The total work done on the particle when moving from A to B (Fig. 8–3) is the sum of all the infinitesimal works done during successive infinitesimal displacements. That is,

$$W = \boldsymbol{F}_1 \cdot d\boldsymbol{r}_1 + \boldsymbol{F}_2 \cdot d\boldsymbol{r}_2 + \boldsymbol{F}_3 \cdot d\boldsymbol{r}_3 + \cdots$$

or

$$W = \int_A^B \boldsymbol{F} \cdot d\boldsymbol{r} = \int_A^B F_T \, ds. \qquad (8.5)^*$$

Before we can perform the integral that appears in Eq. (8.5), we must know $\boldsymbol{F}$ as a function of x, y, and z. Also, in general, we must know the equation of the path along which the particle moves. Alternatively, we must know $\boldsymbol{F}$, x, y, and z as functions of time or some other variable.

Sometimes it is convenient to represent F_T graphically. In Fig. 8–4 we have plotted F_T as a function of the distance s. The work $dW = F_T \, ds$ done during a small displacement ds corresponds to the area of the narrow rectangle. Thus we

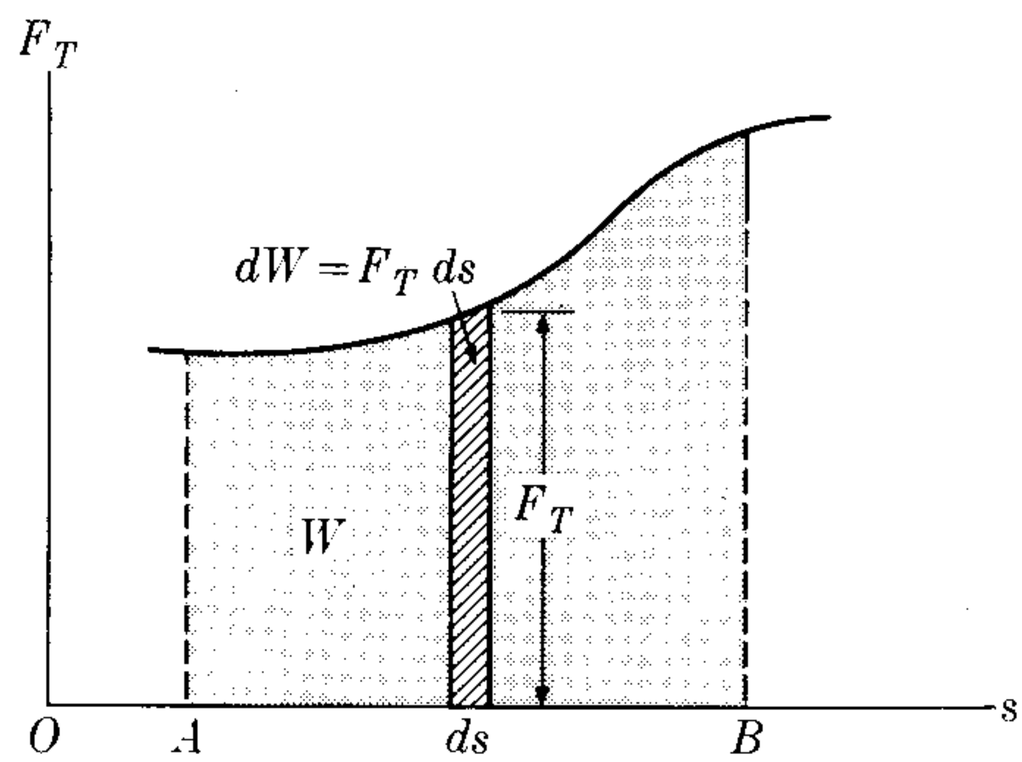

Fig. 8–4. The total work done in going from A to B is equal to the area under the curve.

* For any vector $\boldsymbol{V}$ which is a function of position, an integral of the form $\int_A^B \boldsymbol{V} \cdot d\boldsymbol{r}$ along some path joining points A and B is called the *line integral* of $\boldsymbol{V}$. It will appear many times in this book.

can find the total work done on the particle in Fig. 8–3 in order to move it from A to B by first dividing the whole shaded area in Fig. 8–4 into narrow rectangles and then adding their areas. That is, the work done is given by the total shaded area in Fig. 8–4.

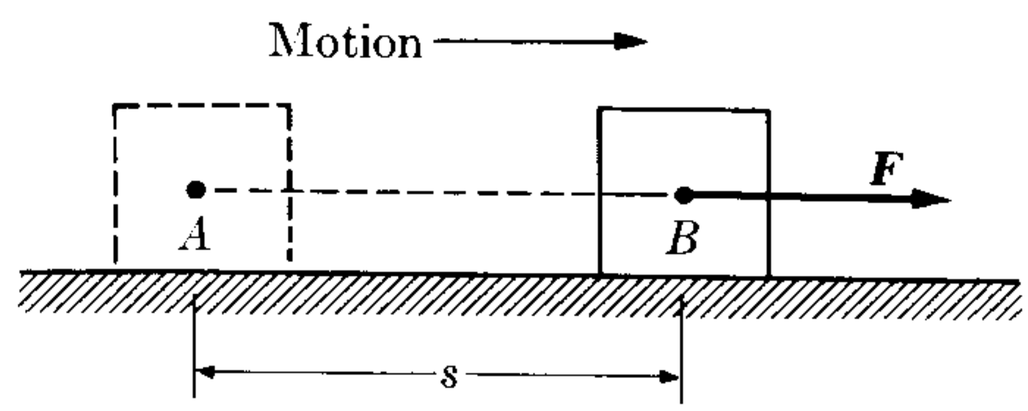

Fig. 8–5. Work of a force that is constant in magnitude and direction.

An interesting particular case is that in which the force is constant in magnitude and direction and the body moves in a straight line in the direction of the force (Fig. 8–5). Then $F_T = F$ and Eq. (8.5) yields

$$W = \int_A^B F\,ds = F\int_A^B ds = Fs, \tag{8.6}$$

or work = force × distance, which is the expression normally found in elementary textbooks.

If F_x, F_y, and F_z are the rectangular components of $\boldsymbol{F}$ and dx, dy, and dz are the rectangular components of $d\boldsymbol{r}$ (Fig. 8–6), application of Eq. (3.20) indicates that

$$W = \int_A^B (F_x\,dx + F_y\,dy + F_z\,dz). \tag{8.7}$$

When the particle is acted on by several forces $\boldsymbol{F}_1, \boldsymbol{F}_2, \boldsymbol{F}_3, \ldots$, the work done by each force during a displacement $\overrightarrow{AA'} = d\boldsymbol{r}$ (Fig. 8–7) is $dW_1 = \boldsymbol{F}_1 \cdot d\boldsymbol{r}$, $dW_2 = \boldsymbol{F}_2 \cdot d\boldsymbol{r}$, $dW_3 = \boldsymbol{F}_3 \cdot d\boldsymbol{r}$, and so forth. Note that $d\boldsymbol{r}$ is the same for all forces because all are acting on the same particle. The total work dW done on the

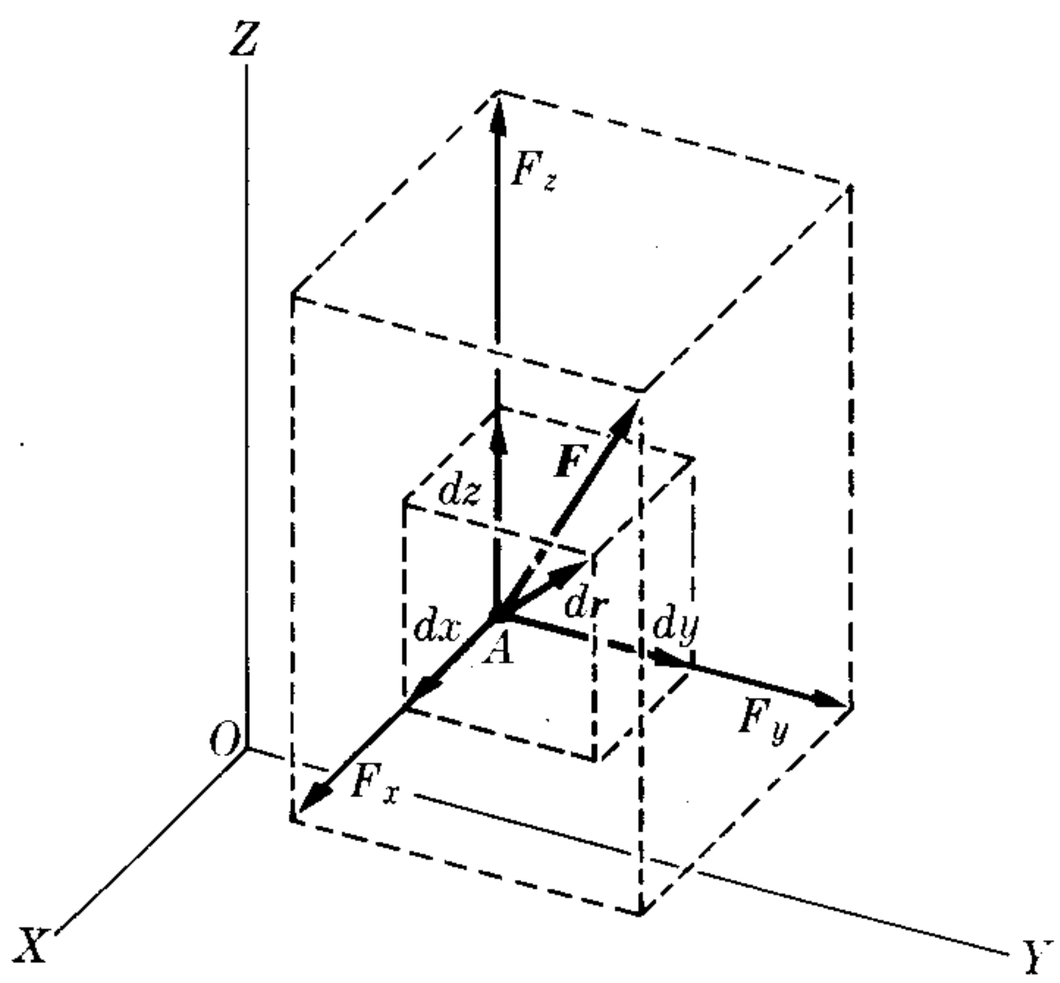

Fig. 8–6. The work done by a force is equal to the sum of the works done by its rectangular components.

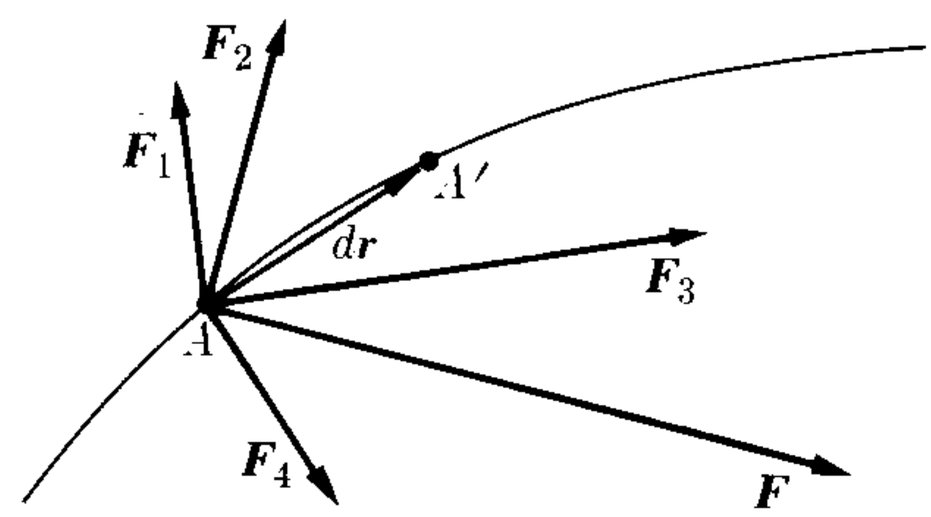

Fig. 8–7. When several forces act on a particle, the work of the resultant is the sum of the works done by the components.

particle is obtained by adding the infinitesimal works dW_1, dW_2, dW_3, . . . , done by each of the forces. Thus

$$\begin{aligned} dW &= dW_1 + dW_2 + dW_3 + \cdots \\ &= \boldsymbol{F}_1 \cdot d\boldsymbol{r} + \boldsymbol{F}_2 \cdot d\boldsymbol{r} + \boldsymbol{F}_3 \cdot d\boldsymbol{r} + \cdots \\ &= (\boldsymbol{F}_1 + \boldsymbol{F}_2 + \boldsymbol{F}_3 + \cdots) \cdot d\boldsymbol{r} \\ &= \boldsymbol{F} \cdot d\boldsymbol{r}, \end{aligned} \tag{8.8}$$

where $\boldsymbol{F} = \boldsymbol{F}_1 + \boldsymbol{F}_2 + \boldsymbol{F}_3 + \cdots$ is the resultant force. But the last result in Eq. (8.8) is the work done by the resultant force acting on the particle. This proves then that the work of the resultant of several forces applied to the same particle is equal to the sum of the works of the component forces.

8.3 Power

In practical applications, especially in connection with machines and engineering, it is important to know the rate at which work is done. The *instantaneous power* is defined by

$$P = \frac{dW}{dt}. \tag{8.9}$$

That is, power is defined as the work done per unit time during a very small time interval dt. Using Eqs. (8.2) and (5.17), we may also write

$$P = \boldsymbol{F} \cdot \frac{d\boldsymbol{r}}{dt} = \boldsymbol{F} \cdot \boldsymbol{v}, \tag{8.10}$$

and thus power can also be defined as force times velocity. The *average power* during a time interval t is obtained by dividing the total work W, as given in Eq. (8.5), by the time t, yielding $P_{\text{ave}} = W/t$.

From the engineering point of view, the concept of power is very important because, when an engineer designs a machine, it is the *rate* at which it can do work that matters, rather than the total amount of work the machine can do.

8.4 Units of Work and Power

From Eqs. (8.2) or (8.6), we see that work must be expressed as the product of a unit of force and a unit of distance. In the MKSC system, work is expressed in newton meters, a unit called the *joule*, abbreviated J. Thus one joule is the work done by a force of one newton when it moves a particle one meter in the same direction as the force. Recalling that $\text{N} = \text{m kg s}^{-2}$, we have that $\text{J} = \text{N m} = \text{m}^2 \text{ kg s}^{-2}$. The name joule was chosen to honor James Prescott Joule (1816–1869), a British scientist famous for his research on the concepts of heat and energy.

In the cgs system, work is expressed in dynes centimeters, a unit called an *erg*. Thus: erg = dyn cm. Recalling that $1 \text{ N} = 10^5$ dyn and $1 \text{ m} = 10^2$ cm, we have that $1 \text{ J} = (10^5 \text{ dyn})(10^2 \text{ m}) = 10^7$ ergs. For the unit of work in the British

system, called the *foot-pound*, and abbreviated ft-lb, we refer the student to Problem 8.4.

According to definition (8.9), power must be expressed as the ratio between a unit of work and a unit of time. In the MKSC system power is expressed in *joules per second*, a unit called a *watt*, abbreviated W. One watt is the power of a machine that does work at the rate of one joule every second. Recalling that $J = m^2\,kg\,s^{-2}$, we have that $W = J\,s^{-1} = m^2\,kg\,s^{-3}$. The name watt was chosen in honor of the British engineer James Watt (1736–1819), who improved the steam engine with his inventions. Two multiples of the watt generally used are the *kilowatt* (kW) and the *megawatt* (MW), defined by: $1\ kW = 10^3\ W$ and $1\ MW = 10^6\ W$. A unit of power commonly used by engineers is the *horsepower*, abbreviated hp, and defined as 550 ft lb per second, or 746 W.

Another unit used to express work is the *kilowatt-hour*. The kilowatt-hour is equal to the work done during one hour by an engine having a power of one kilowatt. Thus: 1 kilowatt-hour $= (10^3\ W)\,(3.6 \times 10^3\ s) = 3.6 \times 10^6\ J$.

EXAMPLE 8.2. An automobile having a mass of 1200 kg moves up a long hill inclined 5° with a constant velocity of 36 km per hour. Calculate the work the engine does in 5 minutes and the power developed by it. Neglect all frictional effects.

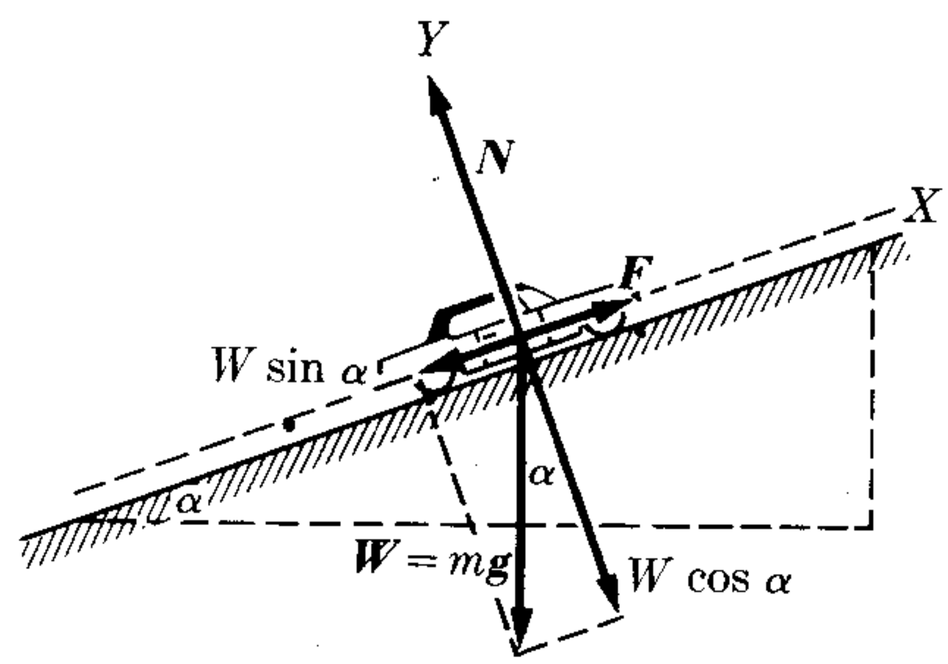

Figure 8–8

Solution: The motion of the automobile along the hill is due to the force F, exerted by the engine, and to the force $W \sin \alpha$, due to the weight of the automobile (Fig. 8–8). Thus we must write, using $W = mg$,

$$F - mg \sin \alpha = ma.$$

Since the motion is uniform, $a = 0$, and $F = mg \sin \alpha = 1.023 \times 10^3$ N. The velocity of the automobile is $v = 36\ km\ hr^{-1} = 36(10^3\ m)(3.6 \times 10^3\ s)^{-1} = 10\ m\ s^{-1}$, and in 5 minutes (or 300 s) it moves the distance $s = (10\ m\ s^{-1})(300\ s) = 3 \times 10^3$ m. Therefore, if we use Eq. (8.6), the work done by the engine is

$$W = Fs = (1.023 \times 10^3\ N)(3 \times 10^3\ m) = 3.069 \times 10^6\ J.$$

The average power can be computed in two different ways. First we may say that

$$P = \frac{W}{t} = \frac{3.069 \times 10^6\ J}{3 \times 10^2\ s} = 1.023 \times 10^4\ W.$$

Alternatively, we may say that

$$P = Fv = (1.023 \times 10^3\ N)(10\ m\ s^{-1}) = 1.023 \times 10^4\ W.$$

EXAMPLE 8.3. Calculate the work required to expand the spring of Fig. 8–9 a distance of 2 cm without acceleration. It is known that when a body whose mass is 4 kg is hung from the spring, the spring's length increases by 1.50 cm.

Solution: When no body is hanging from the spring, the spring's length extends from O to the horizontal level A. It has been verified experimentally that to extend a spring a small distance x without acceleration, a force proportional to the distance is required; that is, $F = kx$. If the spring is extended without acceleration, it produces an equal and opposite force. This is the principle of the spring balance or *dynamometer*, commonly used for measuring forces. To determine the proportionality constant k, we use the fact that when the body m exerts the force of its weight on the spring, the spring expands the distance $x = 1.50$ cm $= 1.50 \times 10^{-2}$ m. The force F is, in this case, the weight $mg = 39.2$ N. Thus, making $mg = kx$, we obtain

$$k = \frac{39.2 \text{ N}}{1.50 \times 10^{-2} \text{ m}}$$

$$= 2.61 \times 10^3 \text{ N m}^{-1}.$$

To extend the spring a distance x, without acceleration, we now apply a force $F = kx$. This can be accomplished by slowly pulling on a cord attached to the spring. The force necessarily increases steadily as x increases. To find the work done, we must use Eq. (8.5), which yields

$$W = \int_0^x F\,dx = \int_0^x kx\,dx = \tfrac{1}{2}kx^2.$$

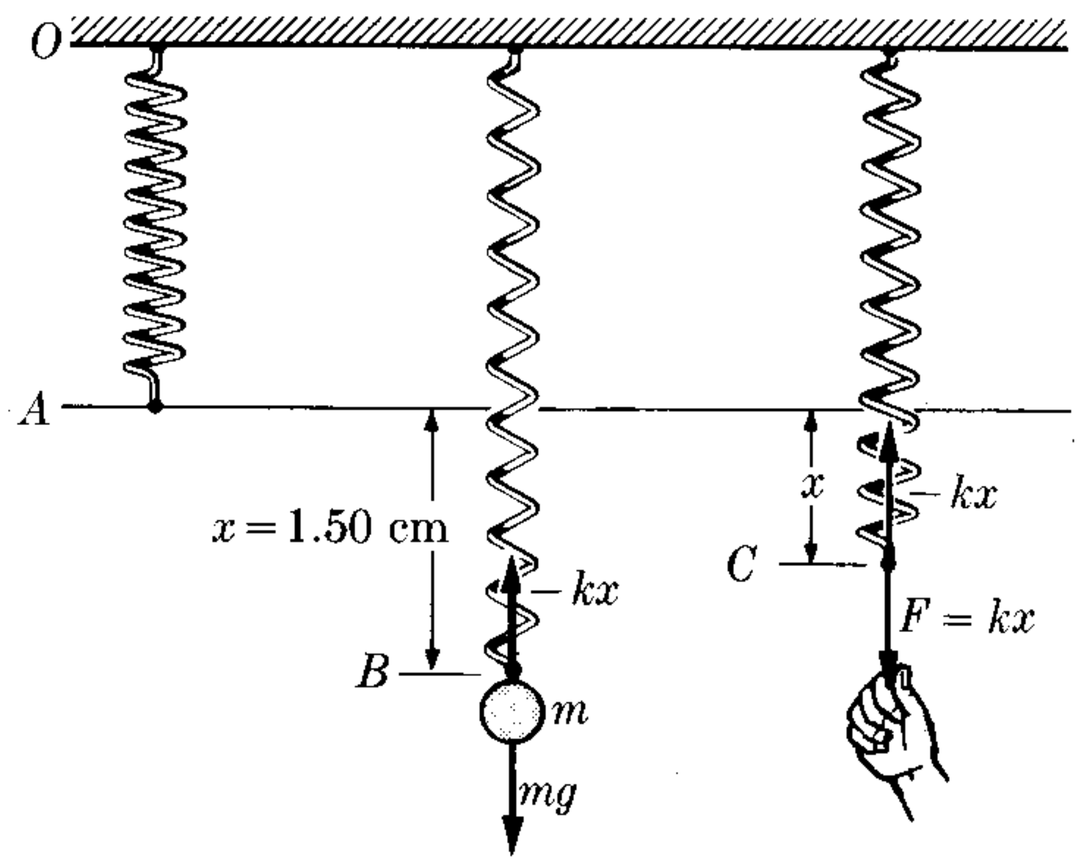

Fig. 8–9. Work done in stretching a spring.

This is the work done for any displacement x. Introducing corresponding numerical values for x and k, we obtain the work required to extend the spring by 2 cm, which is $W = 5.22 \times 10^{-1}$ J.

EXAMPLE 8.4. A force $F = 6t$ N acts on a particle whose mass is 2 kg. If the particle starts from rest, find the work done by the force during the first 2 s.

Solution: In the preceding example it was easy to calculate the work because we knew the force as a function of the position ($F = kx$). But in this example we know the force only as a function of the time ($F = 6t$). Thus we cannot directly calculate the work by $W = \int F\,dx$. Instead we must first find the displacement in terms of the time, using the equation of motion, $F = ma$. Thus $a = F/m = 3t$ m s^{-2}. Using Eq. (5.6), with $v_0 = 0$ because the particle starts from rest, we may write

$$v = \int_0^t (3t)\,dt = 1.5t^2 \text{ m s}^{-1}.$$

Now, if we use Eq. (5.3) with $x_0 = 0$, and if we place our origin of coordinates at the starting point, we obtain

$$x = \int_0^t (1.5t^2)\,dt = 0.5t^3 \text{ m}.$$

Now that we have the position x as a function of time t, we may proceed in two different ways.

(a) Solving for t, we get $t = (x/0.5)^{1/3} = 1.260x^{1/3}$, and the force in terms of position is then $F = 6t = 7.560x^{1/3}$ N. Using Eq. (8.5), we then have

$$W = \int_0^x (7.560x^{1/3})\, dx = 5.670x^{4/3}.$$

When $t = 2$, we have that $x = 0.5(2)^3 = 4$ m, and thus $W = 36.0$ J.

(b) We may also proceed in a different way: From $x = 0.5t^3$, we have $dx = 1.5t^2\, dt$. Then, using for the force its expression in terms of time, $F = 6t$, we may write

$$W = \int_0^t (6t)(1.5t^2\, dt) = 2.25t^4 \text{ J},$$

and if we make $t = 2$ s, then $W = 36.0$ J, in agreement with the previous result.

This second method is the one we normally must use when we know the force as a function of time, because even after solving the equation of motion it may be, in general, difficult to express force as a function of position.

8.5 Kinetic Energy

From Eq. (7.27), we have that the tangential force is $F_T = m\, dv/dt$. Therefore

$$F_T\, ds = m\frac{dv}{dt}\, ds = m\, dv\frac{ds}{dt} = mv\, dv,$$

since $v = ds/dt$, according to Eq. (5.23). Therefore the integral appearing in Eq. (8.5) for the total work is

$$W = \int_A^B F_T\, ds = \int_A^B mv\, dv = \tfrac{1}{2}mv_B^2 - \tfrac{1}{2}mv_A^2, \tag{8.11}$$

where v_B is the particle's velocity at B and v_A is the particle's velocity at A. The result (8.11) indicates that no matter what the functional form of the force $\boldsymbol{F}$ and the path followed by the particle, the value of the work W done by the force is always equal to the difference of the quantity $\frac{1}{2}mv^2$ evaluated at the end and at the beginning of the path. This important quantity, called *kinetic energy*, is designated by E_k. Therefore

$$E_k = \tfrac{1}{2}mv^2 \qquad \text{or} \qquad E_k = \frac{p^2}{2m}, \tag{8.12}$$

since $p = mv$. Equation (8.11) can then be expressed in the form

$$W = E_{k,B} - E_{k,A}, \tag{8.13}$$

which can be expressed in words as:

the work done on a particle is equal to the change in its kinetic energy,

and is a result which is valid in general, no matter what the nature of the force.

We can see that, in view of Eq. (8.13), kinetic energy is obviously measured in the same units as work; i.e., in joules in the MKSC system and in ergs in the cgs system. This can also be verified by noting, from Eq. (8.12), that E_k in the MKSC system must be expressed in $m^2\,kg\,s^{-2}$, which is the dimensional expression for joules in terms of the fundamental units.

Let us mention in passing that another unit of energy widely used by physicists to describe chemical and nuclear processes is the *electron volt*, abbreviated eV, whose precise definition will be given in Section 14.9 (Vol. II). Its equivalence is: $eV = 1.60210 \times 10^{-19}$ J. A useful multiple of the electron volt is the MeV, which is equal to 10^6 eV or 1.60210×10^{-13} J.

Result (8.13), relating the change in kinetic energy E_k of a particle to the work W done by the force, bears a great resemblance to Eq. (8.1), relating the change in momentum $\boldsymbol{p}$ of a particle to the impulse $\boldsymbol{I}$ of the force. The difference is that the impulse, since it is a *time* integral, is useful only when we know the force as a function of time. But work, since it is a *space* integral, can easily be computed when we know the force as a function of position. We usually do know the force as a function of position, and it is for this reason that the concepts of work and energy play such an important role in physics.

Let us remind the student that these concepts of work and energy, as used in physics, have very precise meanings that must be understood thoroughly, and must not be confused with the same terms as they are loosely used in daily life.

EXAMPLE 8.5. Using the data of Example 8.4, compute directly the kinetic energy which the particle gains in a time t.

Solution: We recall from the solution of Example 8.4 that the velocity at time t is $v = 1.5t^2\ m\,s^{-1}$, and thus the kinetic energy of the particle is

$$E_k = \tfrac{1}{2}mv^2 = \tfrac{1}{2}(2\ kg)(1.5t^2\ m\,s^{-1})^2 = 2.25t^4\ J.$$

The particle's initial kinetic energy, at $t = 0$, is zero, and therefore the gain in kinetic energy of the particle in the time interval t is $E_k - E_{k,0} = 2.25t^4$ J, which is just equal to the work W done on the particle, according to the second result of Example 8.4.

EXAMPLE 8.6. The spring of Example 8.3 is placed in horizontal position, as shown in Fig. 8–10. The mass m is moved to the right the distance a, and then released. Calculate its kinetic energy when it is at distance x from the equilibrium position.

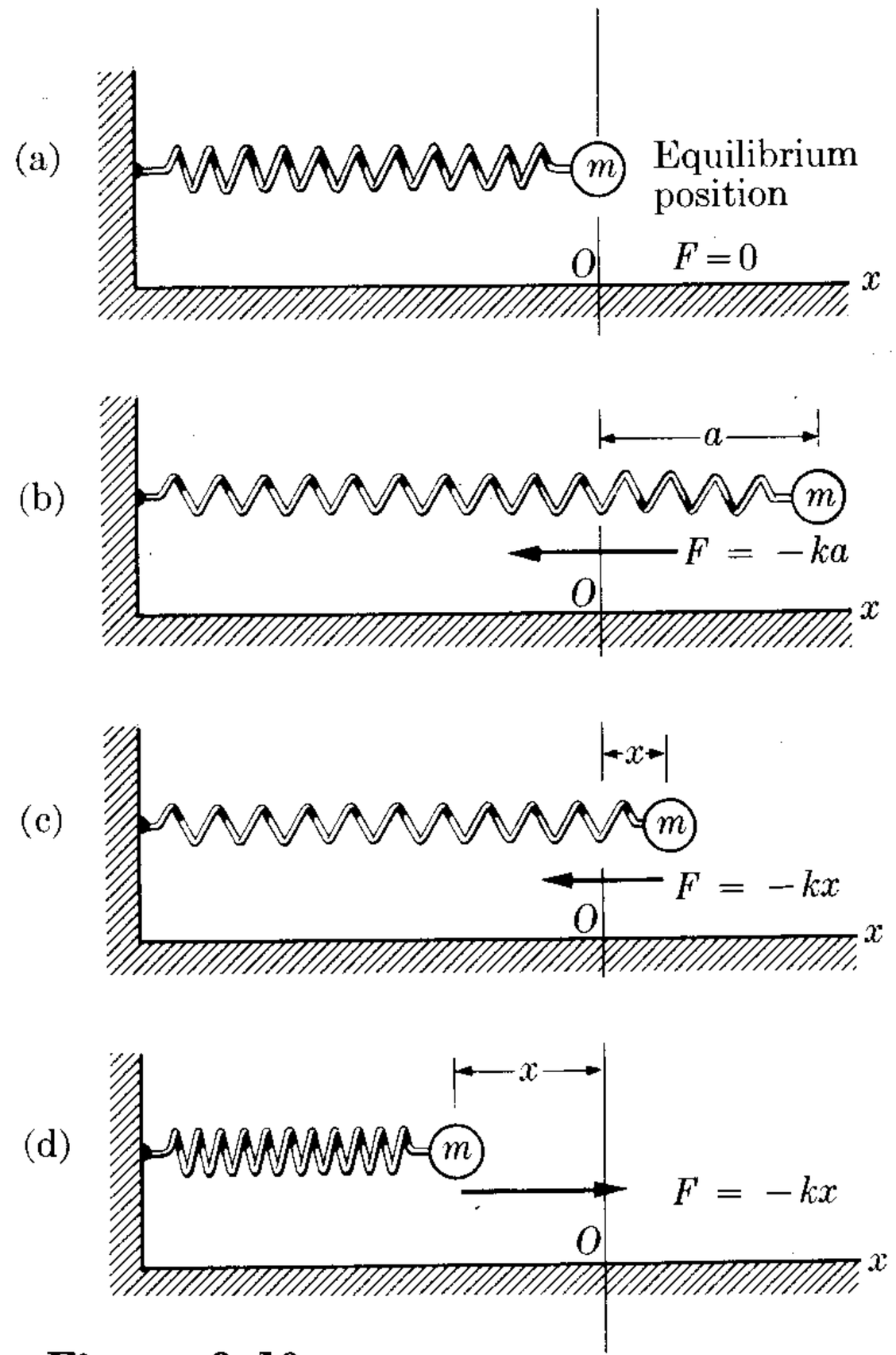

Figure 8–10

Solution: According to our explanation in Example 8.3, the spring will exert a force $F = -kx$ on the mass m when it is at distance x from the unextended position. (The minus sign indicates that the force produced by the spring is to the left when the body is displaced to the right.) At the equilibrium position $x = 0$, and thus $F = 0$. At position (b), when the mass is about to be released, $x = a$, $F = -ka$, and the velocity is zero ($v_0 = 0$) resulting in an initial kinetic energy of zero. Let us call v the velocity at the intermediate position x. Then, using Eq. (8.11), we find that

$$\tfrac{1}{2}mv^2 = \int_a^x F\,dx = \int_a^x (-kx)\,dx = \tfrac{1}{2}k(a^2 - x^2)$$

or

$$v = \sqrt{(k/m)(a^2 - x^2)},$$

which gives us the velocity of the particle in terms of the position. Note that the velocity depends on the square of x. What is the physical meaning of this dependence? With what velocity does the particle reach the position $x = 0$? Should we put a $\pm$ sign in front of the square root in the expression for v? Is there any limitation on the possible values of x? Can the student arrive at a pictorial representation of the resulting motion?

8.6 Work of a Force Constant in Magnitude and Direction

Consider a particle m moving under the action of a force $\boldsymbol{F}$ which is constant in magnitude and direction (Fig. 8–11). There may be other forces acting on the particle that may or may not be constant, but we do not wish to be concerned with them now. The work of $\boldsymbol{F}$ when the particle moves from A to B along path (1) is

$$W = \int_A^B \boldsymbol{F}\cdot d\boldsymbol{r} = \boldsymbol{F}\cdot\int_A^B d\boldsymbol{r} = \boldsymbol{F}\cdot(\boldsymbol{r}_B - \boldsymbol{r}_A). \tag{8.14}$$

One important conclusion derived from Eq. (8.14) is that the work in this case is independent of the path joining points A and B. For example, if the particle, instead of moving along path (1), moves along path (2), which also joins A and B, the work will be the same because the vector difference $\boldsymbol{r}_B - \boldsymbol{r}_A = \overrightarrow{AB}$ is still

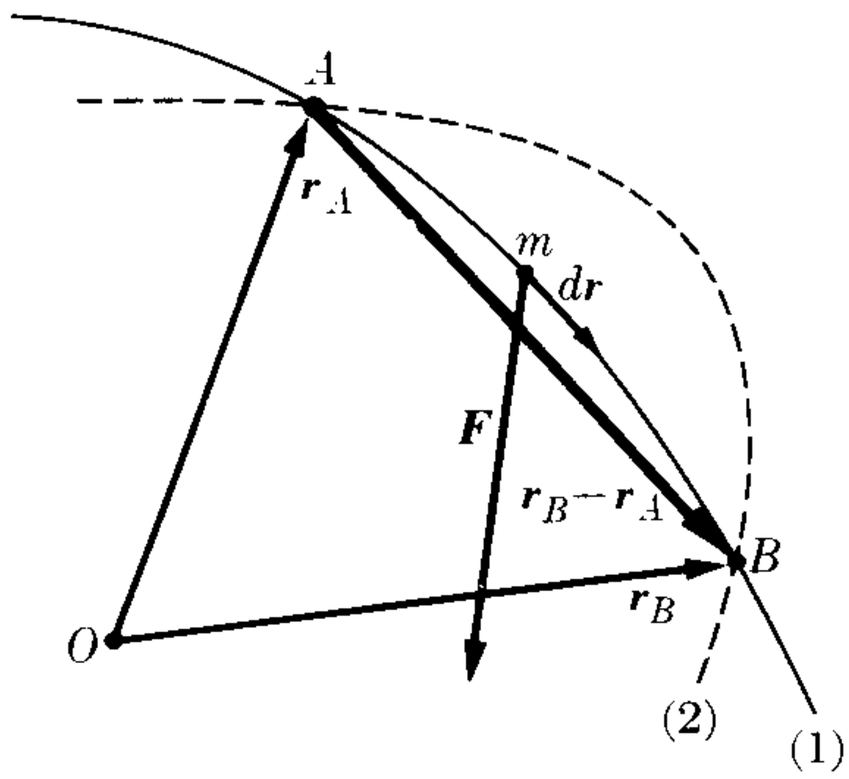

Fig. 8–11. Work done by a force which is constant in magnitude and direction.

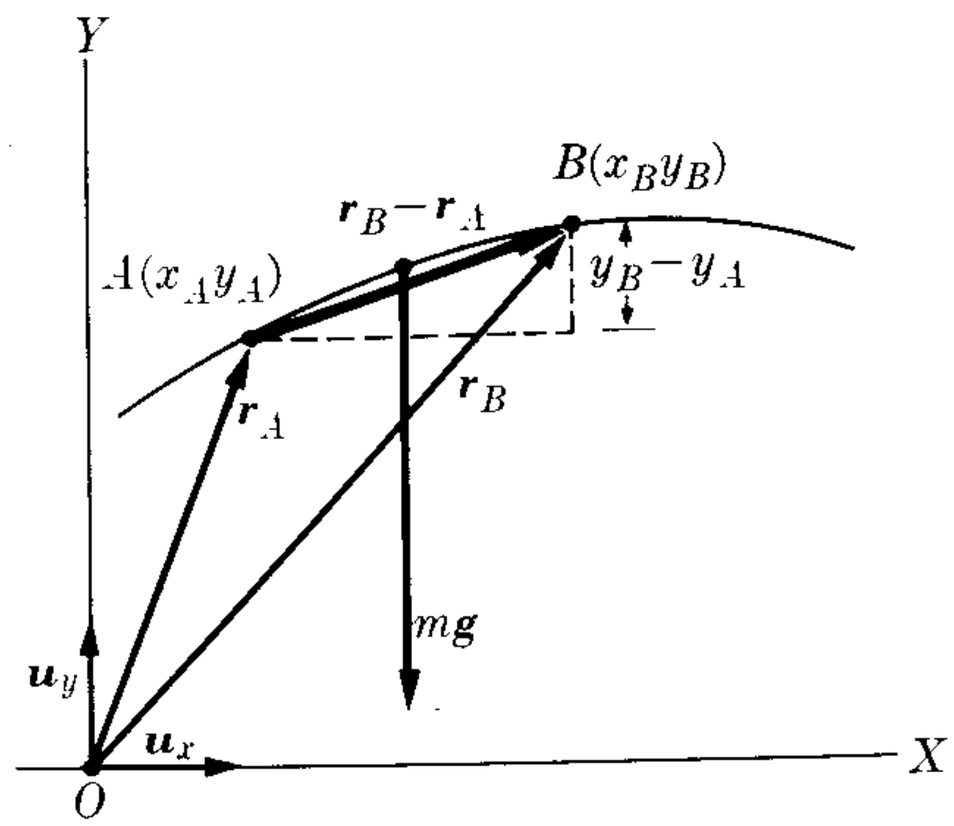

Fig. 8–12. Work done by gravity.

the same. Note that Eq. (8.14) can also be written in the form

$$W = \boldsymbol{F} \cdot \boldsymbol{r}_B - \boldsymbol{F} \cdot \boldsymbol{r}_A, \tag{8.15}$$

and is therefore equal to the difference between the quantity $\boldsymbol{F} \cdot \boldsymbol{r}$ evaluated at one end of the path and at the other.

An important application of Eq. (8.14) is to be found in the work done by the force of gravity (Fig. 8–12). In this case $\boldsymbol{F} = m\boldsymbol{g} = -\boldsymbol{u}_y mg$ and $\boldsymbol{r}_B - \boldsymbol{r}_A = \boldsymbol{u}_x(x_B - x_A) + \boldsymbol{u}_y(y_B - y_A)$. Therefore, substituting in Eq. (8.14) and using Eq. (3.19) for the scalar product, we have

$$W = -mg(y_B - y_A) = mgy_A - mgy_B. \tag{8.16}$$

Obviously in Eq. (8.16) there is no reference to the path, and the work depends only on the difference $y_B - y_A$ between the heights of the two endpoints.

EXAMPLE 8.7. A mass of 2 kg attached to a string one meter long is displaced an angle 30° with the vertical and released. Find its velocity when the string forms an angle of 10° with the vertical, on the same side and on the opposite side.

Solution: A mass hanging from a string is commonly called a *pendulum*. When the string is pulled out to an angle θ_0 (Fig. 8–13) and released, its initial velocity is zero. Under the action of its weight $m\boldsymbol{g}$ and the pull $\boldsymbol{F}_N$ of the string, it describes an arc of a circle while approaching point A. After passing point A it moves to the left until it reaches a symmetrical position. From then on the motion continues back and forth, resulting in the well-known oscillation of a pendulum. (Oscillatory motion will be discussed in detail in Chapter 12.)

In order to obtain v by using the principle of energy, Eq. (8.11), we should compute first the work done by the forces acting on the particle. The centripetal force $\boldsymbol{F}_N$ does no work, because at each position it is perpendicular to the velocity. And the work of the force of gravity $m\boldsymbol{g}$ can be computed with the aid of Eq. (8.16); that is, $W = mgy_0 - mgy = mg(y_0 - y)$. Now, measuring the height from an arbitrary horizontal level, we obtain $y_0 - y = B'C' = OC' - OB'$. But $OB' = l\cos\theta_0$ and $OC' = l\cos\theta$. Thus $y_0 - y = l(\cos\theta - \cos\theta_0)$ and

$$\begin{aligned} W &= mg(y_0 - y) \\ &= mgl(\cos\theta - \cos\theta_0). \end{aligned}$$

The kinetic energy at position C is $E_k = \frac{1}{2}mv^2$, and at B is zero. Thus, using Eq. (8.13), we obtain

$$\tfrac{1}{2}mv^2 = mgl(\cos\theta - \cos\theta_0)$$

or

$$v = \sqrt{2gl(\cos\theta - \cos\theta_0)}\,.$$

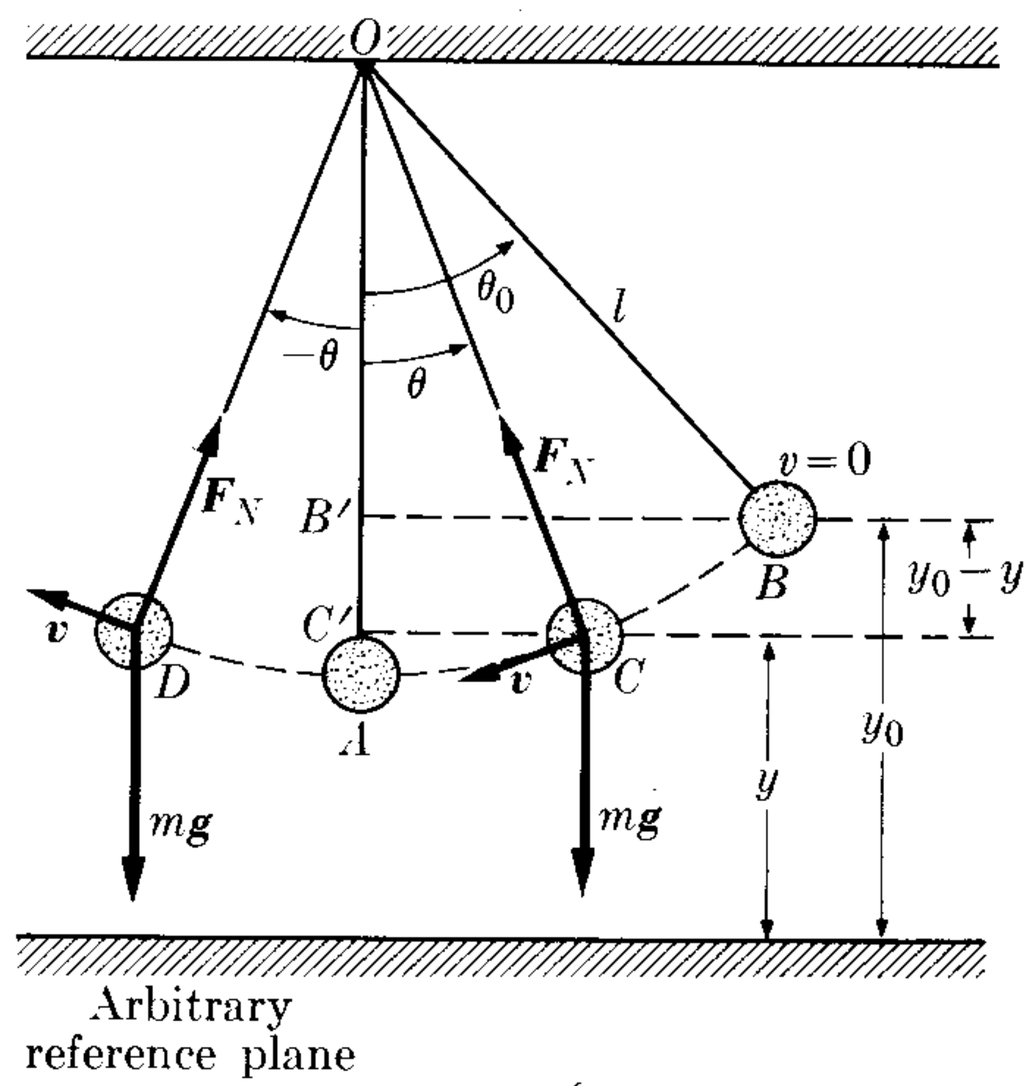

Fig. 8–13. Energy relations in motion of a pendulum.

We note that the result is independent of the mass. Introducing the numerical values, we have

$$v = \sqrt{2(9.8 \text{ m s}^{-2})(1 \text{ m})(\cos 10° - \cos 30°)} = 1.526 \text{ m s}^{-1}.$$

Note that at the symmetric position D, which makes an angle of $-10°$ with the vertical, we get the same result, since $\cos(-\theta) = \cos\theta$.

8.7 Potential Energy

The situation illustrated in the previous section is just one example of a large and important class of forces, which are called *conservative forces*, for reasons to be explained in later sections of this chapter.

A force is conservative if its dependence on the position vector $\boldsymbol{r}$ or on the coordinates x, y, z of the particle is such that the work W can always be expressed as the difference between a quantity $E_p(x, y, z)$ evaluated at the initial and at the final points. The quantity $E_p(x, y, z)$ is called the *potential energy*, and is a function of the coordinates of the particles. Then, if $\boldsymbol{F}$ is a conservative force,

$$W = \int_A^B \boldsymbol{F} \cdot d\boldsymbol{r} = E_{p,A} - E_{p,B}. \tag{8.17}$$

Note that we write $E_{p,A} - E_{p,B}$ and not $E_{p,B} - E_{p,A}$; that is, the work done is equal to E_p at the starting point minus E_p at the endpoint. In other words,

> *potential energy is a function of the coordinates such that the difference between its value at the initial and final positions is equal to the work done on the particle to move it from the initial to the final position.*

Strictly speaking, the potential energy E_p must depend on the coordinates of the particle considered, as well as on the coordinates of all the other particles of the world which interact with it. However, as we mentioned in Chapter 7 when we were dealing with the dynamics of a particle, we assume the rest of the world essentially fixed, and thus only the coordinates of the particle under consideration appear in E_p.

The student must realize, comparing Eq. (8.17) with the kinetic energy relation (8.12), that Eq. (8.12) is generally valid no matter what the force $\boldsymbol{F}$ may be. It is always true that $E_k = \frac{1}{2}mv^2$, while the form of the function $E_p(x, y, z)$ depends on the nature of the force $\boldsymbol{F}$, and not all forces may satisfy the condition set by Eq. (8.17). Only those satisfying it are called *conservative*. For example, comparing Eq. (8.17) with Eq. (8.16), we note that the force of gravity is conservative, and the potential energy due to gravity is

$$E_p = mgy. \tag{8.18}$$

Similarly, from Eq. (8.15), we see that the potential energy corresponding to a constant force is

$$E_p = -\boldsymbol{F} \cdot \boldsymbol{r}. \tag{8.19}$$

Potential energy is always defined within an arbitrary constant, because, for example, if we write $mgy + C$ instead of Eq. (8.18), Eq. (8.16) still remains the same, since the constant C, appearing in the two terms, cancels out. Because of this arbitrariness, we can define the zero or reference level of potential energy wherever it best suits us. For example, for problems of falling bodies, the earth's surface is the most convenient reference level, and so the potential energy due to gravity is taken as zero at the earth's surface. For a satellite, either natural or man-made, the zero of potential energy is usually defined at an infinite distance.

The work done by conservative forces is independent of the path.

We can see this from the defining Eq. (8.17) since, no matter what the path joining points A and B, the difference $E_{p,A} - E_{p,B}$ remains the same because it depends only on the coordinates of A and B. In particular, if the path is *closed* (Fig. 8–14) so that the final point coincides with the initial point (that is, A and B are the same point), then $E_{p,A} = E_{p,B}$ and the work is zero ($W = 0$). This means that during part of the path the work is positive and during the other part it is negative by the same amount, giving a zero net result. When the path is closed, the integral appearing in Eq. (8.17) is written $\oint$. The circle on the integral sign indicates that the path is closed. Therefore, for conservative forces,

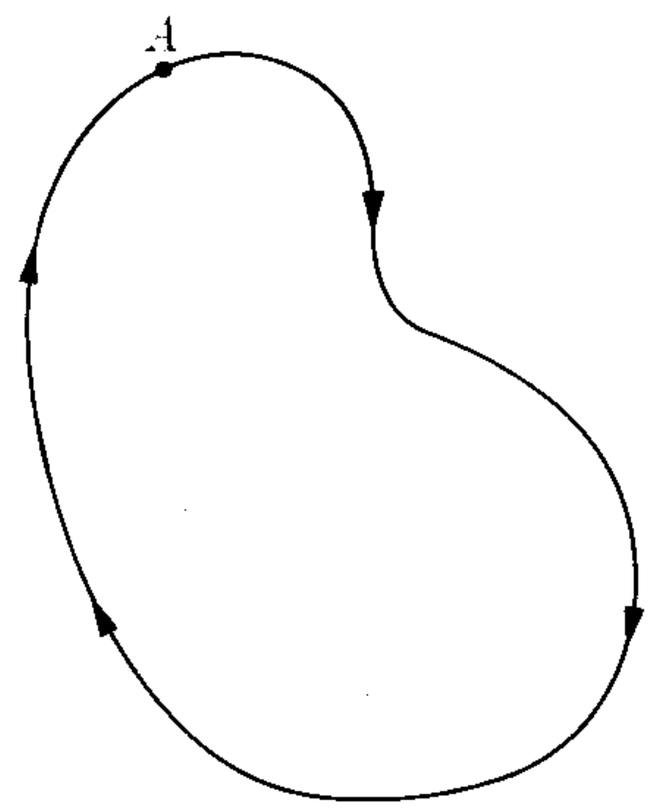

Fig. 8–14. The work done by a conservative force along a closed path is zero.

$$W_{\circ} = \oint \boldsymbol{F} \cdot d\boldsymbol{r} = 0. \qquad (8.20)^*$$

Conversely, it can be proved that the condition expressed by Eq. (8.20) may be adopted as the definition of a conservative force. In other words, if a force $\boldsymbol{F}$ satisfies Eq. (8.20) for any closed path arbitrarily chosen, then it can be proved that Eq. (8.17) is correct.

To satisfy Eq. (8.17) it is necessary that

$$\boldsymbol{F} \cdot d\boldsymbol{r} = -dE_p, \qquad (8.21)$$

because then

$$W = \int_A^B \boldsymbol{F} \cdot d\boldsymbol{r} = -\int_A^B dE_p$$
$$= -(E_{p,B} - E_{p,A}) = E_{p,A} - E_{p,B},$$

in agreement with Eq. (8.17). Note that the negative sign appearing in Eq. (8.21) is necessary if we are to obtain $E_{p,A} - E_{p,B}$ instead of $E_{p,B} - E_{p,A}$.

---

* For any vector $\boldsymbol{V}$ which is a function of the position, an integral of the form $\oint \boldsymbol{V} \cdot d\boldsymbol{r}$ along a closed path is called the *circulation* of $\boldsymbol{V}$. It will appear many times in this book.

Since $\boldsymbol{F} \cdot d\boldsymbol{r} = F\,ds \cos\theta$, where θ is the angle between the force and the displacement, we may write instead of Eq. (8.21)

$$F \cos\theta = -\frac{dE_p}{ds}. \tag{8.22}$$

Now, as explained in connection with Fig. 8–1, $F \cos\theta$ is the component of the force in the direction of the displacement ds; therefore if we know $E_p(x, y, z)$, we may obtain the component of $\boldsymbol{F}$ in any direction by computing the quantity $-dE_p/ds$ which is the negative of the space rate of change of E_p in that direction. This is called the *directional derivative* of E_p. When a vector is such that its component in any direction is equal to the directional derivative of a function in that direction, the vector is called the *gradient* of the function. Thus we say that $\boldsymbol{F}$ is the negative of the gradient of E_p, and write Eq. (8.22) in the general form:

$$\boldsymbol{F} = -\text{grad}\, E_p,$$

where "grad" stands for gradient. When we are interested in the rectangular components of $\boldsymbol{F}$ along the X-, Y-, and Z-axes, $F \cos\theta$ in Eq. (8.22) becomes F_x, F_y, and F_z, and the displacement ds becomes dx, dy, and dz, respectively, so that

$$F_x = -\frac{\partial E_p}{\partial x}, \qquad F_y = -\frac{\partial E_p}{\partial y}, \qquad F_z = -\frac{\partial E_p}{\partial z}, \tag{8.23}$$

or

$$\boldsymbol{F} = -\text{grad}\, E_p = -\boldsymbol{u}_x \frac{\partial E_p}{\partial x} - \boldsymbol{u}_y \frac{\partial E_p}{\partial y} - \boldsymbol{u}_z \frac{\partial E_p}{\partial z}. \tag{8.24}$$

Note that when we write Eq. (8.24) we use the symbol for partial derivative for the first time in this book. This terminology is necessary because the potential energy $E_p(x, y, z)$ is, in general, a function of all three variables x, y, and z. But when a particle is displaced a distance dx along the X-axis, for example, the coordinates y and z remain unchanged. Thus, instead of writing dE_p/dx, we must use the notation $\partial E_p/\partial x$ adopted by the mathematicians for these cases.

If the motion is in a plane and the coordinates r, θ are used (Fig. 8–15), the displacement along the radius vector $\boldsymbol{r}$ is dr and the displacement perpendicular to the radius vector is $r\,d\theta$. Thus the radial and transverse components of the force are

$$F_r = -\frac{\partial E_p}{\partial r}, \qquad F_\theta = -\frac{1}{r}\frac{\partial E_p}{\partial \theta}. \tag{8.25}$$

Note that again we use the partial derivative notation.

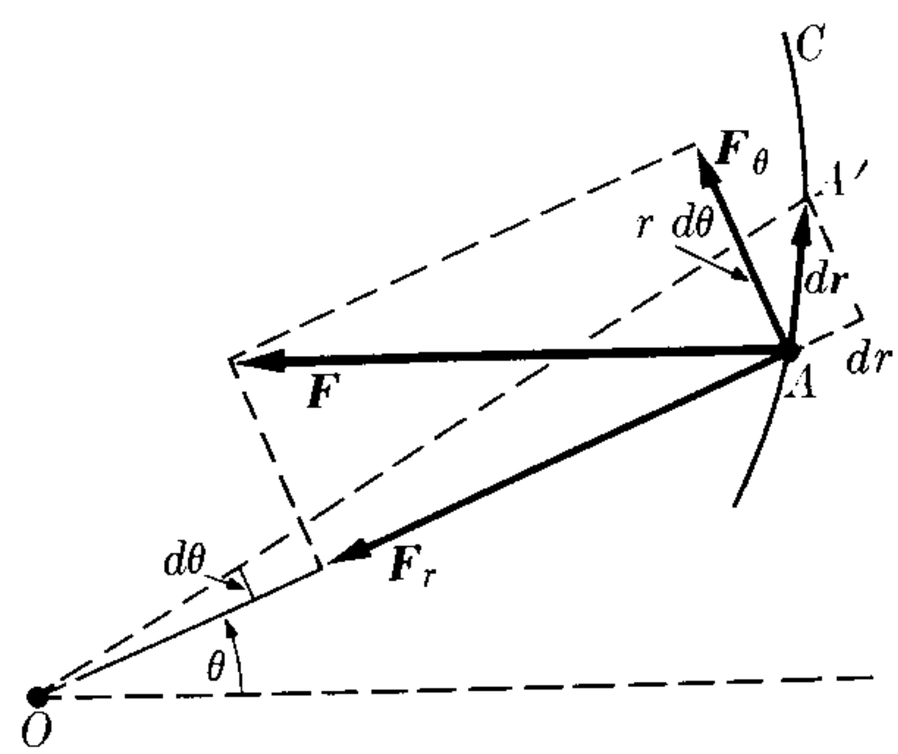

Figure 8–15

An important case is that in which the potential energy E_p depends on the distance r but not on the angle θ; that is, instead of $E_p(r, \theta)$, we have $E_p(r)$. Then $\partial E_p/\partial\theta = 0$ and, according to Eq. (8.25), $F_\theta = 0$. The force then does not have a transverse component, but only a radial one, so that the force is central, and its line of action always passes through the center. Conversely, if the force is central there is only a radial component, and $F_\theta = 0$, yielding $\partial E_p/\partial\theta = 0$, which implies that E_p is independent of θ. As a result, a central force depends only on the distance of the particle from the center. This important result can be stated by saying that

> *the potential energy associated with a central force depends only on the distance of the particle from the force center, and conversely.*

When the forces are not central, there is a torque around point O given by $\tau = F_\theta r$, since the radial force does not contribute to the torque. Using the second relation in Eq. (8.25), we have that the torque around O is

$$\tau = -\frac{\partial E_p}{\partial\theta}. \tag{8.26}$$

This is a general expression that gives the torque in a direction perpendicular to the plane on which the angle θ is measured. Therefore, since a torque produces a corresponding change in angular momentum [cf. Eq. (7.38)], we conclude that

> *whenever the potential energy depends on an angle, a torque is applied to the system, resulting in a change in the angular momentum in a direction perpendicular to the plane of the angle.*

Note on the concept of gradient. We shall often encounter expressions in physics similar to Eq. (8.24); therefore it is important to have a clear understanding of the meaning of gradient. Let us consider a function $V(x, y, z)$ that depends on the three coordinates of a point. We draw the surfaces

$$V(x, y, z) = C_1 \quad \text{and} \quad V(x, y, z) = C_2$$

(Fig. 8–16). In moving from a point A on C_1 to any point B on C_2, the function V always experiences a change $C_2 - C_1$. If C_1 and C_2 differ by an infinitesimal amount, we may write $dV = C_2 - C_1$. The change in V per unit length, or the "directional derivative" of V, is

$$dV/ds = (C_2 - C_1)/ds.$$

Let us consider the case when A and B are along a normal N common to the two surfaces. The directional derivative along the normal AN is dV/dn. But from Fig. 8–16, we see that $dn = ds \cos\theta$. Thus

$$\frac{dV}{ds} = \frac{dV}{dn}\frac{dn}{ds} = \frac{dV}{dn}\cos\theta,$$

which relates the directional derivative along the normal with the directional derivative

along any other direction. Since $\cos\theta$ has its maximum value for $\theta = 0$, we conclude that dV/dn gives the maximum directional derivative of V. Introducing the unit vector $\boldsymbol{u}_N$, perpendicular to the surface at A, we define the gradient of V by

$$\text{grad } V = \boldsymbol{u}_N \frac{dV}{dn},$$

and thus the gradient is a vector perpendicular to the surface $V(x, y, z) = \text{const}$, and is equal to the maximum directional derivative of $V(x, y, z)$. Then we may write

$$\frac{dV}{ds} = |\text{grad } V| \cos\theta,$$

which indicates that the space rate of change in the direction AD, or the directional derivative of $V(x, y, z)$, is equal to the component of the vector grad V in that direction. This is the relation that was used to go from Eq. (8.22) to Eqs. (8.23) and (8.24). A differential operator, identified by the symbol ∇, read "del," has been introduced to shorten notation. It is expressed as:

$$\nabla = \boldsymbol{u}_x \frac{\partial}{\partial x} + \boldsymbol{u}_y \frac{\partial}{\partial y} + \boldsymbol{u}_z \frac{\partial}{\partial z}.$$

In terms of this operator, the gradient may be written as

$$\text{grad } V = \nabla V.$$

For further information concerning the gradient of a function, the student is referred to *Calculus and Analytic Geometry* (third edition), by G. B. Thomas. Reading, Mass.: Addison-Wesley, 1962.

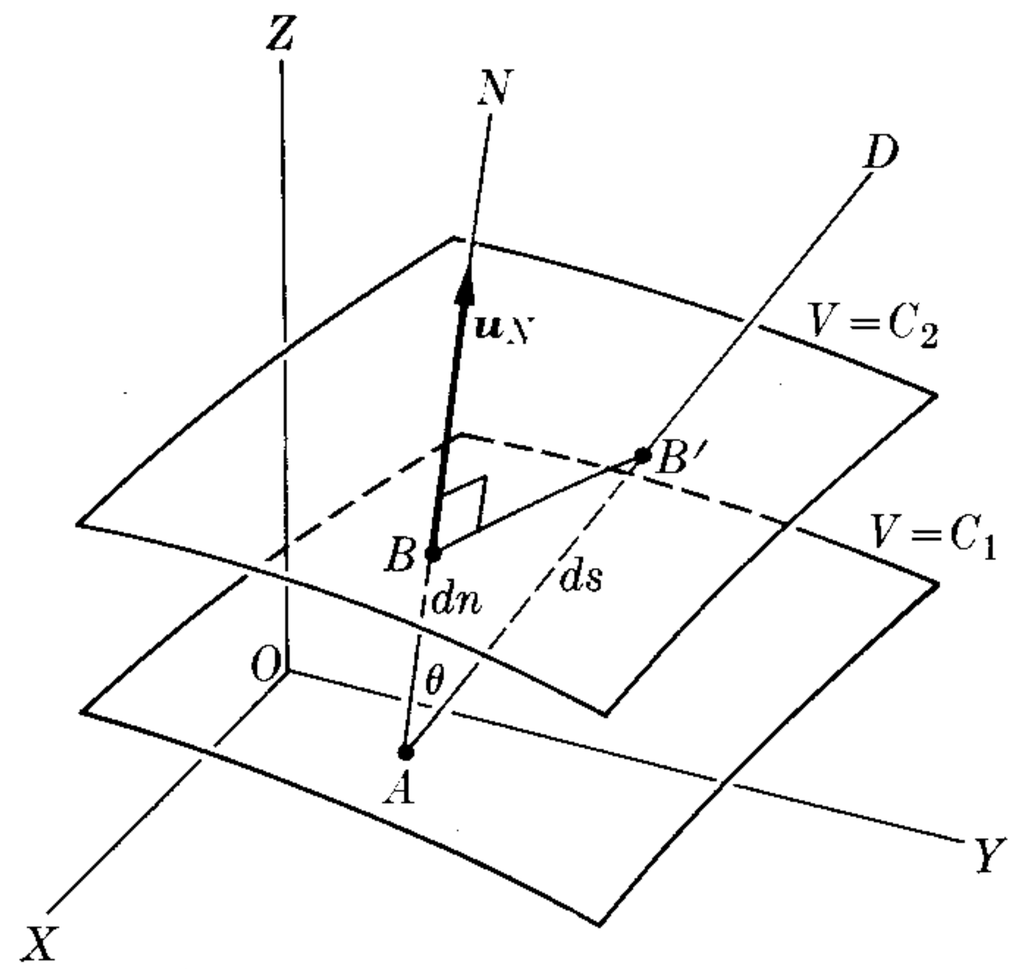

Fig. 8–16. The gradient of $V(x, y, z)$ is a vector function which at each point is perpendicular to the surface $V = \text{const}$.

EXAMPLE 8.8. Compute the potential energy associated with the following central forces: (a) $F = kr$, (b) $F = k/r^2$. In both cases if k is negative the force is attractive and if k is positive the force is repulsive.

Solution: Using Eq. (8.25), for case (a), we have $F = -\partial E_p/\partial r = kr$ or $dE_p = -kr\,dr$. Integrating, we obtain

$$E_p = \int -kr\,dr = -\tfrac{1}{2}kr^2 + C.$$

The constant of integration C is determined by assigning a value of E_p to a given position. In this case it is customary to make $E_p = 0$ at $r = 0$, so that $C = 0$ and $E_p = -\frac{1}{2}kr^2$. Considering that $r^2 = x^2 + y^2 + z^2$, we may also write $E_p = -\frac{1}{2}k(x^2 + y^2 + z^2)$. Using Eq. (8.23), we find that the rectangular components of the force are

$$F_x = -\frac{\partial E_p}{\partial x} = kx, \qquad F_y = -\frac{\partial E_p}{\partial y} = ky, \qquad F_z = -\frac{\partial E_p}{\partial z} = kz,$$

a result that was to be expected, since the central force $F = kr$ in vector form is $\boldsymbol{F} = k\boldsymbol{r} = k(\boldsymbol{u}_x x + \boldsymbol{u}_y y + \boldsymbol{u}_z z)$.

For case (b) we have $F = -\partial E_p/\partial r = k/r^2$ or $dE_p = -k(dr/r^2)$. Integrating, we have

$$E_p = \int -k\frac{dr}{r^2} = \frac{k}{r} + C.$$

For inverse-r forces, it is customary to determine C by making $E_p = 0$ at $r = \infty$, so that $C = 0$ and $E_p = k/r$. What are the rectangular components of the force in this case?

8.8 Conservation of Energy of a Particle

When the force acting on a particle is conservative, we may combine Eq. (8.17) with the general Eq. (8.13), which gives us $E_{k,B} - E_{k,A} = E_{p,A} - E_{p,B}$ or

$$(E_k + E_p)_B = (E_k + E_p)_A. \tag{8.27}$$

The quantity $E_k + E_p$ is called the *total energy* of the particle, designated by E; that is, the total energy of a particle is equal to the sum of its kinetic energy and its potential energy, or

$$E = E_k + E_p = \tfrac{1}{2}mv^2 + E_p(x, y, z). \tag{8.28}$$

Equation (8.27) indicates that

> *when the forces are conservative the total energy E of the particle remains constant,*

since states designated by A and B are arbitrary. Thus we may write for any position of the particle,

$$E = E_k + E_p = \text{const.} \tag{8.29}$$

In other words, *the energy of the particle is conserved.* This is the reason why we say that when there is a potential energy, the forces are conservative. For example, in the case of a falling body we have seen (Eq. 8.18) that $E_p = mgy$, and the conservation of energy gives

$$E = \tfrac{1}{2}mv^2 + mgy = \text{const.} \tag{8.30}$$

If initially the particle is at height y_0 and its velocity is zero, the total energy is mgy_0, and we have $\frac{1}{2}mv^2 + mgy = mgy_0$, or $v^2 = 2g(y_0 - y) = 2gh$, where $h = y_0 - y$ is the height through which it has fallen. This result is the well-known formula for the velocity acquired in free fall through a height h. We must note, however, that Eq. (8.30) is not restricted to vertical motion; it is equally valid for the motion of any projectile moving at an angle with the vertical.

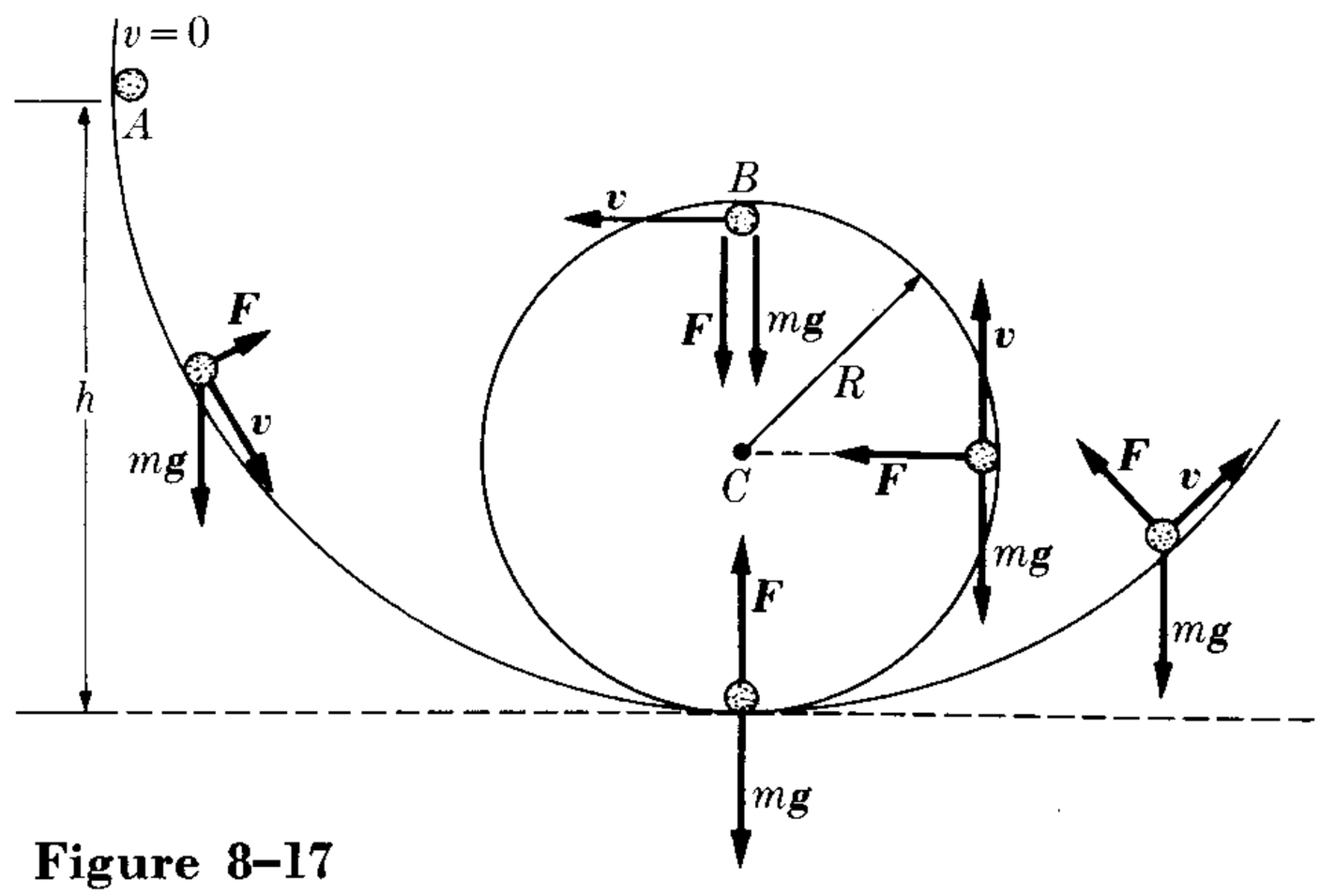

Figure 8–17

It should be noted that, for a given total energy, the magnitude of the velocity (irrespective of the direction of the motion) at a given point is fixed by Eq. (8.29). This is particularly clear in the case of motion under gravity, as shown in Eq. (8.30).

EXAMPLE 8.9. Determine the minimum height at which a ball should start in order to successfully complete the loop shown in Fig. 8–17. Assume that the ball slides without rolling and without friction.

Solution: We assume that the ball is released at point A at a height h above the base of the circle in Fig. 8–17. The ball gains velocity while moving down and starts losing velocity when moving up the circle. At any point on the track, the forces acting on the particle are its weight mg and the force $\boldsymbol{F}$ due to the track. (The force $\boldsymbol{F}$ points toward the center of the loop, since the track "pushes" but does not "pull.") At the highest point on the loop, both mg and $\boldsymbol{F}$ point toward the center O, and according to Eq. (7.28) we must have

$$F + mg = \frac{mv^2}{R},$$

where R is the radius of the track. Since F cannot be negative, the minimum velocity of the ball at B if it is to describe the circle must correspond to $F = 0$ or $mg = mv^2/R$, which gives

$$v^2 = gR.$$

If the velocity is less than $\sqrt{gR}$, the downward pull of the weight is larger than the required centripetal force, and the ball will separate from the circle before it reaches point B, and will describe a parabola until it falls back on the circle.

To obtain the corresponding height h, we note that at point A the total energy is $E_A = (E_k + E_p)_A = mgh$, since $v = 0$. At B, where $y = 2R$ and $v^2 = gR$,

$$E_B = (E_k + E_p)_B = \tfrac{1}{2}m(gR) + mg(2R) = \tfrac{5}{2}mgR.$$

Thus, equating the values of E_A and E_B, we get $h = \frac{5}{2}R$, which is the minimum height of the starting point of the ball if it is to successfully describe the circle. This result is correct so long as we can neglect frictional forces. If the ball rolls, the methods to be introduced in Chapter 10 must be used.

8.9 Rectilinear Motion under Conservative Forces

In the general case of rectilinear motion the potential energy depends on only one coordinate, let us say x, and Eq. (8.28) for the conservation of energy becomes

$$E = \tfrac{1}{2}mv^2 + E_p(x), \tag{8.31}$$

where E, the total energy, is a constant. This equation will show us the practical usefulness of the energy concept. For rectilinear motion $v = dx/dt$, and Eq. (8.31) becomes

$$E = \tfrac{1}{2}m\left(\frac{dx}{dt}\right)^2 + E_p(x). \tag{8.32}$$

Solving for dx/dt, we obtain

$$\frac{dx}{dt} = \left\{\frac{2}{m}[E - E_p(x)]\right\}^{1/2}. \tag{8.33}$$

Under the present conditions we may write this equation in a form in which the variables x and t are separated; that is, the x-variable appears on only one side of the equation and the t-variable appears only on the other side. For our equation, we do this by writing

$$\frac{dx}{\{(2/m)[E - E_p(x)]\}^{1/2}} = dt.$$

Integrating (and setting $t_0 = 0$ for convenience), we have

$$\int_{x_0}^{x} \frac{dx}{\{(2/m)[E - E_p(x)]\}^{1/2}} = \int_0^t dt = t. \tag{8.34}$$

This equation allows us to obtain a relation between x and t, and thus to solve the problem of the rectilinear motion of the particle. Therefore, whenever we can find the potential energy function [and this is relatively easy if we know the force as a function of x, because we simply utilize Eq. (8.23) to obtain $E_p(x)$], the conservation of energy expressed by Eq. (8.34) gives us directly the solution of the problem of rectilinear motion.

EXAMPLE 8.10. Use Eq. (8.34) to solve the problem of rectilinear motion under constant force.

Solution: In this case F is constant. If we take the X-axis along the direction of the force, the first of Eqs. (8.23) gives us $F = -dE_p/dx$ or $dE_p = -F\,dx$. Integrating, we obtain $E_p = -Fx + C$, and setting $E_p = 0$ at $x = 0$, we get $C = 0$. Thus

$$E_p = -Fx$$

is the expression for the potential energy associated with a constant force. This agrees with Eq. (8.19) if we make $\boldsymbol{F} = \boldsymbol{u}_x F$; that is, the force $\boldsymbol{F}$ is in the X-direction. Using

Eq. (8.34), with $x_0 = 0$ for simplicity, we now have

$$\frac{1}{(2/m)^{1/2}} \int_0^x \frac{dx}{(E + Fx)^{1/2}} = t$$

or

$$\frac{2}{F}(E + Fx)^{1/2} - \frac{2}{F}E^{1/2} = \left(\frac{2}{m}\right)^{1/2} t.$$

Solving for x, we get

$$x = \frac{1}{2}\left(\frac{F}{m}\right)t^2 + \left(\frac{2E}{m}\right)^{1/2} t.$$

But $F/m = a$, and since $E = \frac{1}{2}mv^2 + Fx$ is the total energy, we have that at $t = 0$, when $x = 0$, the energy E is all kinetic and is equal to $\frac{1}{2}mv_0^2$. Thus $2E/m = v_0^2$, and we finally obtain for x, $x = \frac{1}{2}at^2 + v_0t$, which is the same expression we obtained before, in Eq. (5.11), with $x_0 = 0$ and $t_0 = 0$. This problem is sufficiently simple for it to be more easily solved by the methods of Chapter 5. We have presented it here mainly as an illustration of the techniques for solving the equation of motion using the principle of energy.

8.10 Motion under Conservative Central Forces

In the case of a central force, when E_p depends only on the distance r, Eq. (8.28) becomes

$$E = \tfrac{1}{2}mv^2 + E_p(r), \tag{8.35}$$

from which it is possible to determine the velocity at any distance. In many cases the function $E_p(r)$ decreases in absolute value when r increases. Then, at very large distances from the center, $E_p(r)$ is negligible and the magnitude of the velocity is constant and is independent of the direction of motion. This is the principle we applied in Example 7.16 when, in Fig. 7–28, we indicated that the final velocity of the receding particle at B was the same as its initial velocity at A.

Note that, when we are dealing with motion under the influence of central forces, there are two conservation theorems. One is the conservation of angular momentum, discussed in Section 7.13, and the other is the conservation of energy, expressed by Eq. (8.35). When we use polar coordinates r and θ, and remember that the components of the velocity are $v_r = dr/dt$ and $v_\theta = r\,d\theta/dt$, we may write, according to Eq. (5.63),

$$v^2 = v_r^2 + v_\theta^2 = \left(\frac{dr}{dt}\right)^2 + r^2\left(\frac{d\theta}{dt}\right)^2.$$

But from the principle of conservation of angular momentum, using Eq. (7.35), $L = mr^2\,d\theta/dt$, we have that

$$r^2\left(\frac{d\theta}{dt}\right)^2 = \frac{L^2}{(mr)^2},$$

where L is the constant angular momentum. Therefore

$$v^2 = \left(\frac{dr}{dt}\right)^2 + \frac{L^2}{(mr)^2}.$$

Introducing this result into Eq. (8.35), we have

$$E = \tfrac{1}{2}m\left(\frac{dr}{dt}\right)^2 + \frac{L^2}{2mr^2} + E_p(r). \tag{8.36}$$

This expression closely resembles Eq. (8.32) for rectilinear motion, with velocity dr/dt, if we assume that, insofar as the radial motion is concerned, the particle moves under an "effective" potential energy

$$E_{p,\mathrm{eff}}(r) = \frac{L^2}{2mr^2} + E_p(r). \tag{8.37}$$

The first term is called the *centrifugal* potential, $E_{p,c}(r) = L^2/2mr^2$, because the "force" associated with it, using Eq. (8.25), is $F_c = -\partial E_{p,c}/\partial r = L^2/mr^3$ and, being positive, is pointing away from the origin; that is, it is centrifugal. Of course no centrifugal force is acting on the particle, except the one that may be due to the real potential $E_p(r)$, in the event that it is repulsive and the centrifugal "force" F_c is just a useful mathematical concept. Physically this concept describes the tendency of the particle, according to the law of inertia, to move in a straight line and thus avoid moving in a curve. Introducing Eq. (8.37) into Eq. (8.36), we have

$$E = \tfrac{1}{2}m\left(\frac{dr}{dt}\right)^2 + E_{p,\mathrm{eff}}(r),$$

and solving for dr/dt, we obtain

$$\frac{dr}{dt} = \left\{\frac{2}{m}[E - E_{p,\mathrm{eff}}(r)]\right\}^{1/2}, \tag{8.38}$$

which is formally identical to Eq. (8.33) for rectilinear motion. Separating the variables r and t and integrating (setting $t_0 = 0$ for convenience), we obtain

$$\int_{r_0}^{r} \frac{dr}{\{(2/m)[E - E_{p,\mathrm{eff}}(r)]\}^{1/2}} = \int_0^t dt = t, \tag{8.39}$$

which gives us the distance r as a function of time [that is, $r(t)$], and therefore we have the solution of our dynamical problem corresponding to radial motion.

When we solve the expression for the angular momentum, $L = mr^2\, d\theta/dt$ for $d\theta/dt$, we have

$$\frac{d\theta}{dt} = \frac{L}{mr^2}. \tag{8.40}$$

Then when we introduce $r(t)$ as obtained from Eq. (8.39) into Eq. (8.40), we express L/mr^2 as a function of time, and when we integrate we have

$$\int_{\theta_0}^{\theta} d\theta = \int_0^t \frac{L}{mr^2}\,dt \qquad \text{or} \qquad \theta = \theta_0 + \int_0^t \frac{L}{mr^2}\,dt. \tag{8.41}$$

This gives θ as a function of time; that is, $\theta(t)$. In this way we can solve the problem completely, giving both the radial and the angular motions as functions of time.

Sometimes, however, we are more interested in the equation of the path. Combining Eqs. (8.38) and (8.40) through division, we may write

$$\frac{dr}{d\theta} = \frac{\{(2/m)[E - E_{p,\text{eff}}(r)]\}^{1/2}}{L/mr^2} \tag{8.42}$$

or, separating the variables r and θ and integrating,

$$\int_{r_0}^{r} \frac{dr}{(m/L)r^2\{(2/m)[E - E_{p,\text{eff}}(r)]\}^{1/2}} = \int_{\theta_0}^{\theta} d\theta = \theta - \theta_0. \tag{8.43}$$

This expression relating r to θ gives the equation of the path in polar coordinates. Conversely, if we know the equation of the path, so that we can compute $dr/d\theta$, Eq. (8.42) allows us to compute the potential energy and then the force.

This section has illustrated how the principles of conservation of angular momentum and of energy allow us to solve for the motion of a particle acted on by a central force. By now the student will have recognized the fact that these principles are not mathematical curiosities, but real and effective tools for solving dynamical problems. We must note that when the motion is due to a central force, the conservation of energy is not enough to solve the problem. It is also necessary to use the conservation of angular momentum. In the case of rectilinear motion, the conservation of energy *is* sufficient to solve the problem. This is because energy is a scalar quantity, and may not be used to determine the direction of motion, while in rectilinear motion, the direction is fixed from the outset.

Finally, let us make it especially clear that the principles of conservation of angular momentum and of energy, as used in this chapter, are properties associated with an individual particle under the special circumstances of its motion, and there is no direct relation to the possible conservation of total energy of the universe. This subject will be discussed in more detail in the next chapter.

8.11 Discussion of Potential Energy Curves

The graphs representing $E_p(x)$ versus x in rectilinear or one-dimensional problems and $E_p(r)$ versus r in central force problems are very useful in helping one to understand the motion of a particle, even without solving the equation of motion. In Fig. 8–18 we have illustrated a possible potential energy curve for one-dimensional motion. When we use the first of Eqs. (8.23), the force on the particle for any

value of x is given by $F = -dE_p/dx$.* Now dE_p/dx is the slope of the curve $E_p(x)$. The slope is positive whenever the curve is increasing or upward, and negative whenever the curve is decreasing or downward. Therefore, the force F (i.e., the negative of the slope), is negative or directed to the left whenever the potential energy is increasing, and positive or directed to the right whenever the potential energy is decreasing. This situation has been indicated in Fig. 8–18 by the horizontal arrows and the different regions marked below the figure.

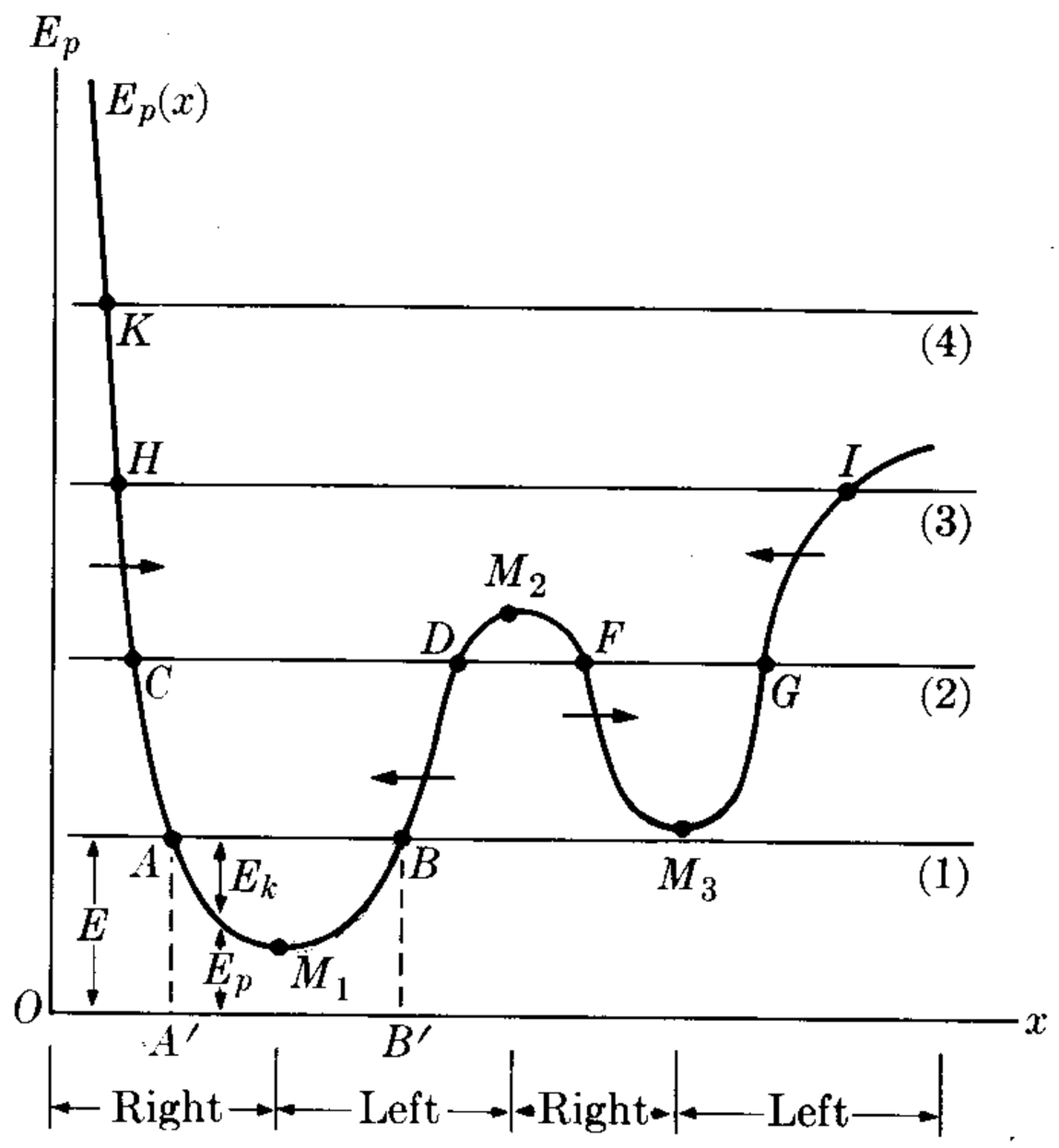

Fig. 8–18. Relation between motion in straight line and potential energy.

At the points where the potential energy is minimum or maximum, such as M_1, M_2, and M_3, we have $dE_p/dx = 0$, and therefore $F = 0$; that is, they are positions of equilibrium. Those positions where $E_p(x)$ is a *minimum* are of *stable* equilibrium because, when the particle is displaced slightly from its equilibrium position, it is acted on by a force that tends to restore it to that position. Where $E_p(x)$ is *maximum*, the equilibrium is *unstable*, since a slight displacement from the equilibrium position causes the particle to experience a force that tends to move it even further away.

Consider now a particle having total energy E, as indicated by the horizontal line (1) of Fig. 8–18. At any position x the potential energy E_p is given by the ordinate of the curve and the kinetic energy, $E_k = E - E_p$, is given by the distance from curve $E_p(x)$ to the E line. Now the E line intersects curve $E_p(x)$ at points A and B. To the left of A and to the right of B the energy E is less than the potential energy $E_p(x)$, and therefore in that region the kinetic energy $E_k = E - E_p$ would be negative. But that is impossible because $E_k = \frac{1}{2}mv^2$ is necessarily positive. Therefore the motion of the particle is limited to the interval AB and the particle oscillates between $x = A'$ and $x = B'$. At these points the velocity becomes zero and the particle reverses its motion. These points are called *turning* points.

If the particle has a higher energy, such as that corresponding to line (2), it has two possible regions of motion. One is oscillating between C and B and the other oscillating between F and G. However, if the particle is in one region it can never jump to the other, because that would require passing through the region DF where the kinetic energy would be negative and is therefore forbidden. We say

* It is not necessary to use the partial derivative notation in this case because E_p depends on only one variable, x.

that the two regions where the motion is allowed are separated by a *potential barrier*. At energy level (3), the motion is oscillatory between H and I. Finally at energy level (4) the motion is no longer oscillatory and the particle moves between K and infinity. For example, if the particle is moving initially to the left, when it reaches K it "bounces" back, receding toward the right and never returning again. When we consider the motion of atomic particles, so that quantum mechanics applies, the description we have given requires some modification.

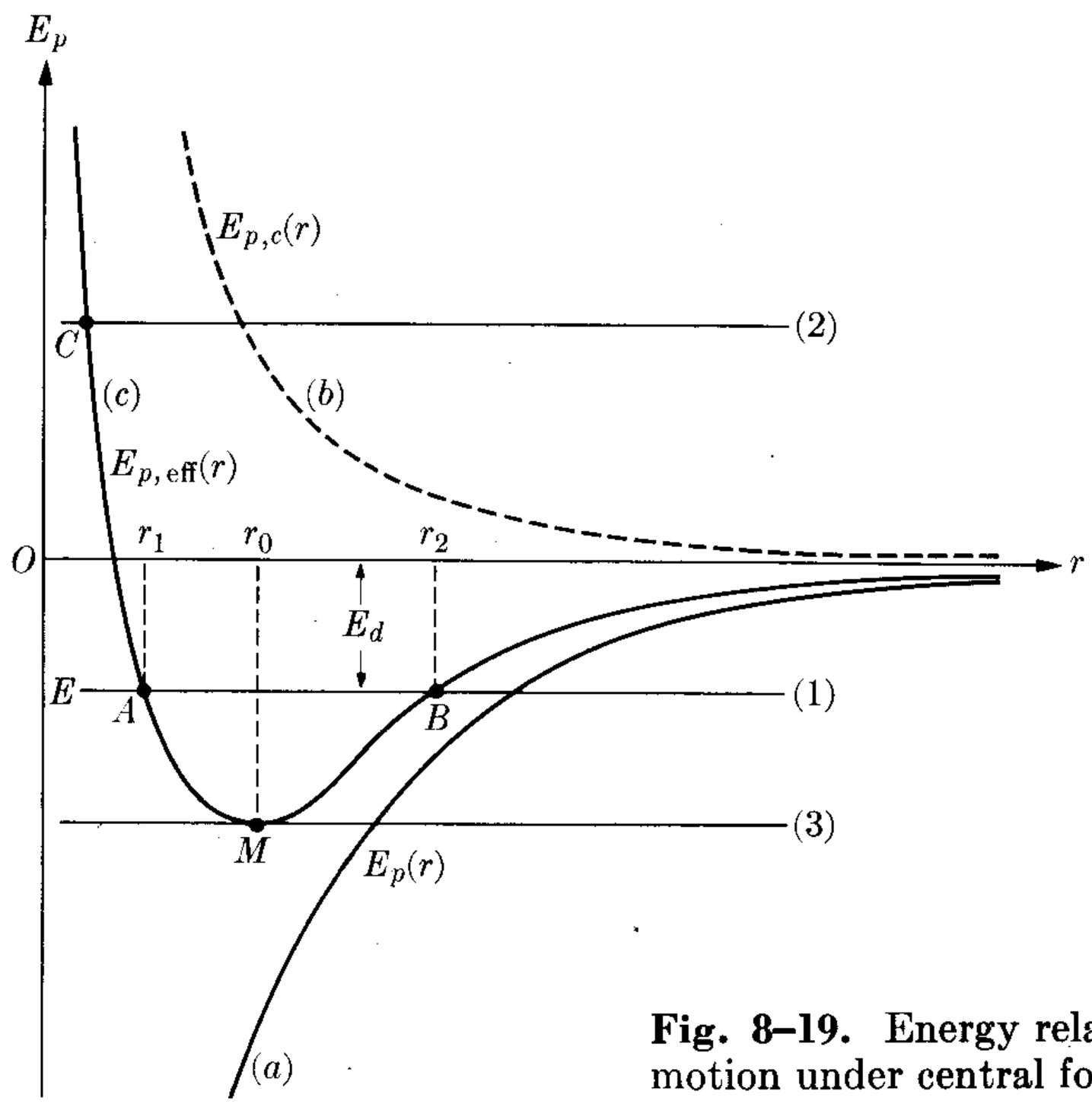

Fig. 8–19. Energy relations for motion under central forces.

Considering now the important case of central forces, let us assume a potential energy $E_p(r)$ corresponding to a force that is attractive at all distances, that is, $F = -\partial E_p/\partial r$ is negative and $E_p(r)$ is an increasing function, as indicated by curve (*a*) of Fig. 8–19. The centrifugal potential $E_{p,c} = L^2/2mr^2$ is indicated by the dashed line (*b*). The centrifugal term is very small at large distances, but increases very rapidly at small distances. In many cases of physical interest the centrifugal potential is the dominant term at small distances, resulting in an effective potential energy $E_{p,\text{eff}} = E_{p,c} + E_p(r)$ with the shape indicated by curve (*c*).

If the total energy E of the particle is indicated by horizontal line (1), the radius of the orbit will oscillate between the minimum and maximum values r_1 and r_2, and the orbit will have the shape illustrated in Fig. 8–20. But if the energy corresponds to a value such as line (2) of Fig. 8–19, the orbit is not bound, and the particle comes from infinity up to the point C of closest approach at distance $r_{\min}$, and then recedes again without ever returning, as shown in Fig. 8–21. If the energy

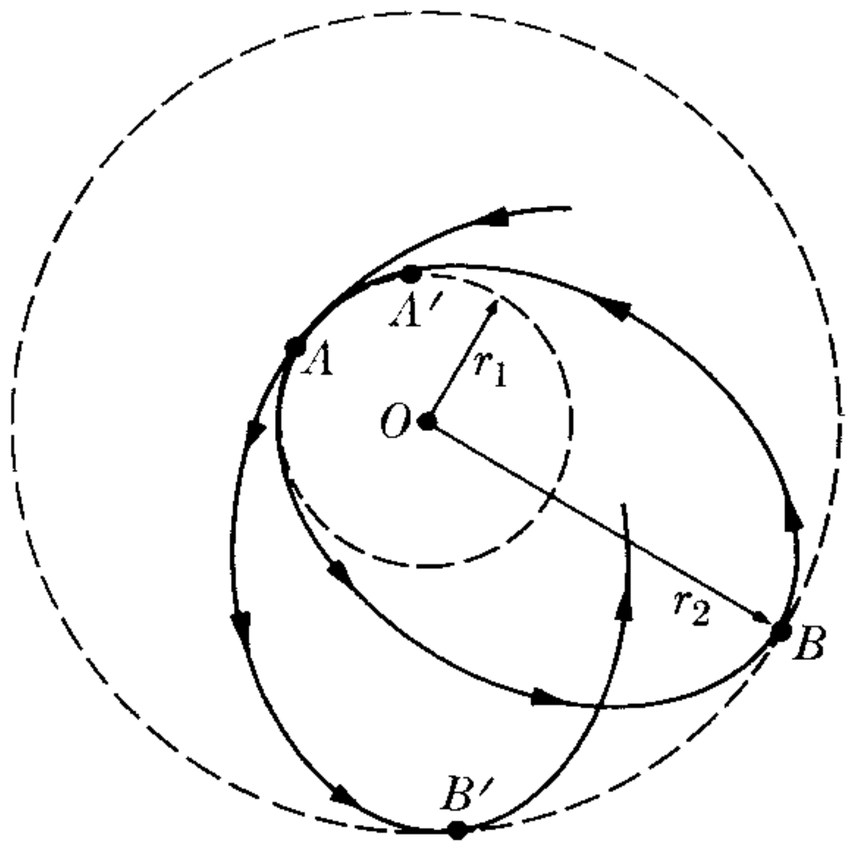

Fig. 8–20. General shape of path for motion under central forces.

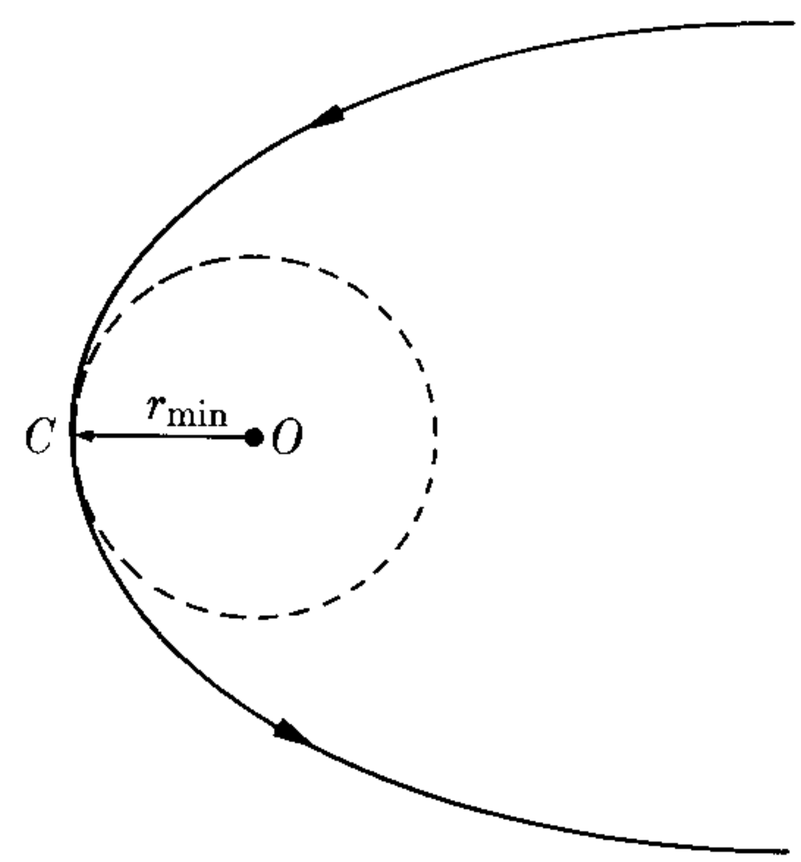

Fig. 8–21. Distance of closest approach.

corresponds to the minimum M of $E_{p,\text{eff}}$, as indicated by line (3), there is only one intersection and the distance to the center remains constant, the particle describing a circular path of radius r_0. Note that the distance of closest approach increases with increasing value of the angular momentum, due to the effect of the centrifugal potential energy $E_{p,c}(r)$.

If, by some mechanism, a particle that has energy equal to level (1) of Fig. 8–19 can absorb energy and thereby "jump" to energy level (2), it will fly away from the center of force; that is, it "dissociates" from the center of force. The minimum energy a particle requires to dissociate from energy level (1) has been indicated in Fig. 8–19 by E_d. On the other hand, if the particle initially in energy level (2) by some process loses energy when it passes near the center of force, it may jump into energy level (1), and then remain in a bound orbit. We say that it has been "captured" by the center of force. This situation is found, for example, in molecular formation and dissociation.

In the case of a diatomic molecule such as H_2 or CO, the potential energy E_p for the interaction between the two atoms already has the shape of (*c*) in Fig. 8–19. Such a potential energy, illustrated by curve (*a*) of Fig. 8–22, corresponds to attraction at large distances and repulsion at short distances, thus preventing the two atoms from coalescing into one single unit even in the absence of the centrifugal effect. The effect of the centrifugal potential $E_{p,c}$ given by the dashed curve (*b*) is to raise the curve to the shape (*c*). We may therefore picture the atoms in the molecule with an energy E in a state of relative oscillation between P_1 and P_2. If the molecule absorbs energy in a proper amount, it may then dissociate and separate into two component atoms which move apart.

EXAMPLE 8.11. The potential energy for the interaction between two gas molecules can be approximated by the expression

$$E_p(r) = -E_{p,0}\left[2\left(\frac{r_0}{r}\right)^6 - \left(\frac{r_0}{r}\right)^{12}\right],$$

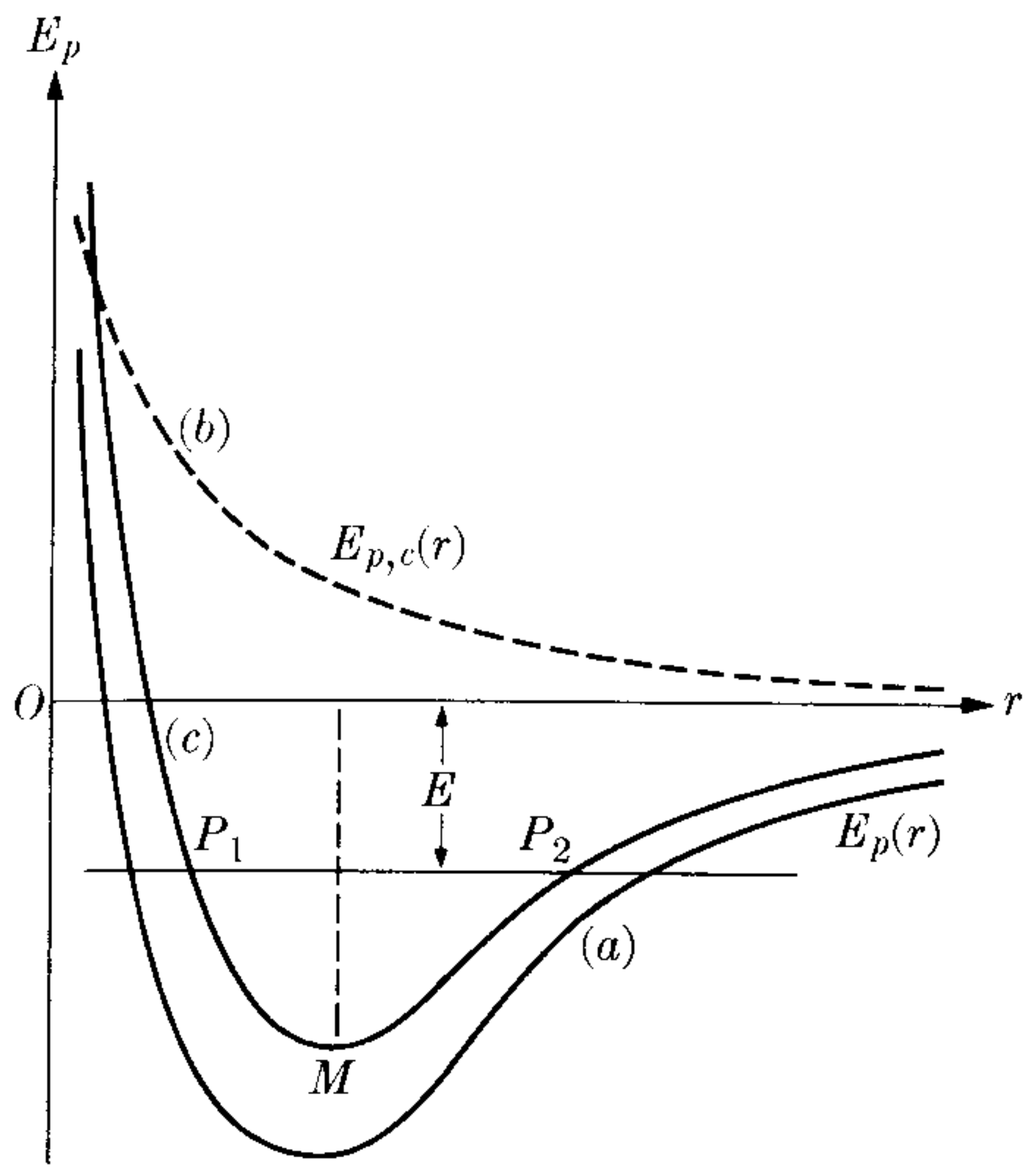

Fig. 8–22. Intermolecular potential.

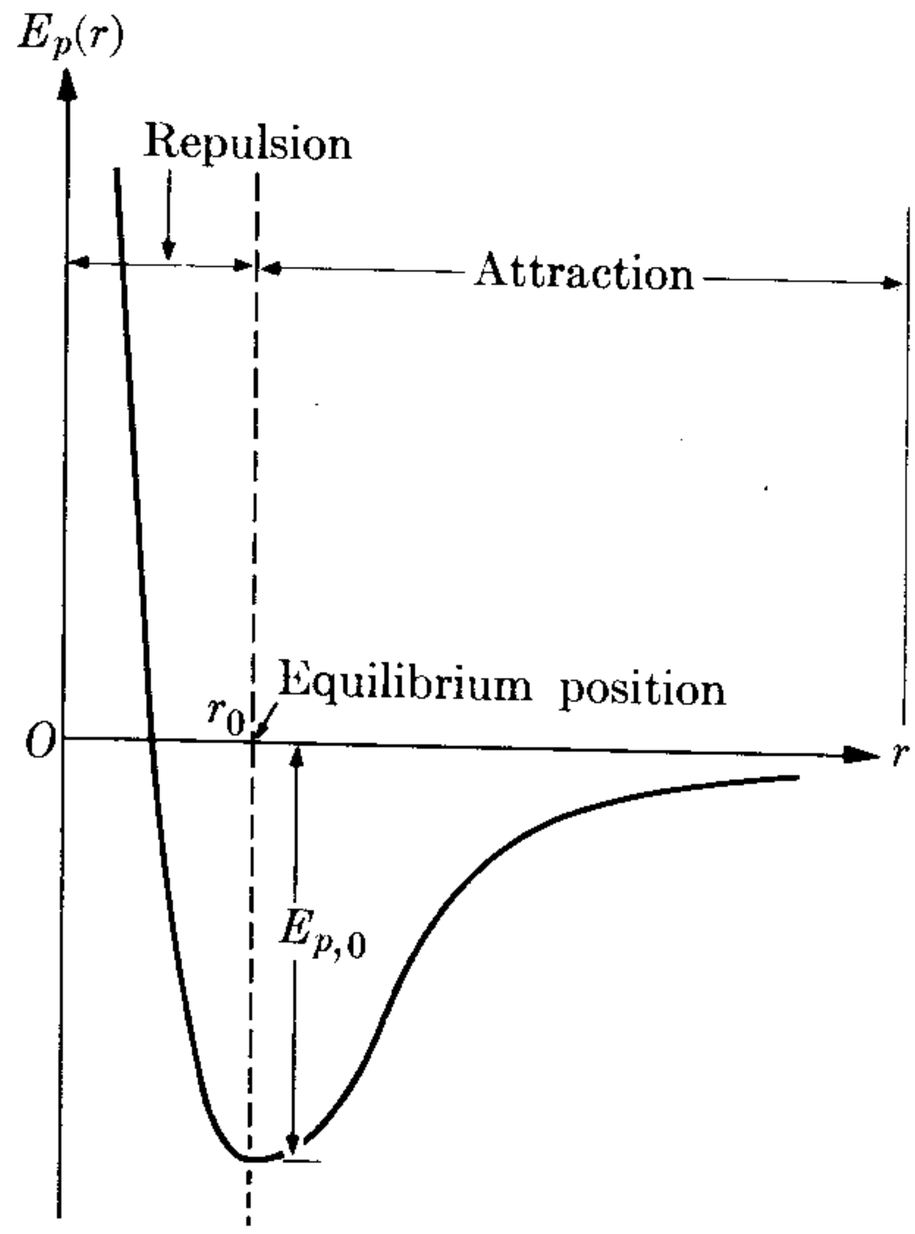

Fig. 8–23. Lennard-Jones intermolecular potential.

where $E_{p,0}$ and r_0 are positive constants and r is the separation between the molecules. This model for molecular potential energies was introduced by the English scientist J. Lennard-Jones. Find the equilibrium position and the value of the potential energy there. The graph of $E_p(r)$ is shown in Fig. 8–23.

Solution: At the equilibrium position, $F = -\partial E_p/\partial r = 0$. Thus

$$\frac{\partial E_p}{\partial r} = -E_{p,0}\left[-12\frac{r_0^6}{r^7} + 12\frac{r_0^{12}}{r^{13}}\right] = 0$$

or $r = r_0$. Setting $r = r_0$ in $E_p(r)$, we have $E_p = -E_{p,0}$ for the potential energy at the point of equilibrium. For distances less than r_0, the intermolecular force is repulsive [$E_p(r)$ is a decreasing function] and for distances larger than r_0 it is attractive [$E_p(r)$ is an increasing function].

Which is the dominant term in $E_p(r)$ at small distances, and which at large distances? We suggest that the student plot the force as a function of the separation r and determine the separation for which the attractive force is maximum. Also we suggest that he look in the literature for values of $E_{p,0}$ and r_0.

8.12 Nonconservative Forces

At first sight we find some forces in nature that are not conservative. One example is friction. Sliding friction always opposes the displacement. Its work will depend on the path followed, and although the path may be closed, the work is not zero, so that Eq. (8.20) does not hold. Similarly, fluid friction opposes the velocity, and depends on velocity but not on position. A particle may thus be subject to conservative and to nonconservative forces at the same time.

For example, a particle falling through a fluid is subject to the conservative gravitational force and to the nonconservative fluid friction. Calling E_p the potential energy corresponding to the conservative forces and W' the work done by the nonconservative forces (work which, in general, is negative because frictional forces oppose the motion), the total work done on the particle when moving from A to B is $W = E_{p,A} - E_{p,B} + W'$. Using Eq. (8.13), we then write

$$E_{k,B} - E_{k,A} = E_{p,A} - E_{p,B} + W'$$

or

$$(E_k + E_p)_B - (E_k + E_p)_A = W'. \tag{8.44}$$

In this case the quantity $E_k + E_p$ does not remain constant but decreases (increases) if W' is negative (positive). But on the other hand, we *cannot* call $E_k + E_p$ the total energy of the particle, because this concept is not applicable in this case, since it does not include all the forces present. The concept of total energy of a particle is meaningful only when *all* the forces are conservative. However, Eq. (8.44) is useful when we wish to make a comparison between the case in which only the conservative forces act (so that $E_k + E_p$ is the total energy) and the case in which there are additional nonconservative forces. Then we say that Eq. (8.44) gives the gain or loss of energy due to the nonconservative forces.

The existence of nonconservative forces such as friction must not be considered as necessarily implying that there may exist nonconservative interactions between fundamental particles. We must recall that frictional forces do not correspond to an interaction between two particles but are really statistical concepts (recall the discussion of Section 7.9). Sliding friction, for example, is the result of many individual interactions between the molecules of the two bodies in contact. *Each* of these interactions can be expressed by a conservative force. However, the macroscopic effect is not conservative for the following reason: Although the body, when it completes a closed orbit, is macroscopically at its original position, the individual molecules have not returned to their original condition. Hence the final state is not microscopically identical to the initial one, nor is it even equivalent, in a statistical sense.

The nonconservative work W' thus represents an energy transfer that, because it corresponds to molecular motion, is in general irreversible. The reason it cannot be recovered is the difficulty, even from a statistical standpoint, of restoring all the molecular motions to the initial state. In some cases, however, the molecular motions can be statistically returned to the original conditions. That is, even if the final state is not microscopically identical to the initial one, they are statistically equivalent. This is the case, for example, when a gas expands very slowly while it is doing work. If after the expansion the gas is very slowly compressed back to the original physical conditions, the final state is statistically equivalent to the initial state. The work done during the compression is the negative of the expansion work, and the total work done is therefore zero.