	FrED Factory	1748325043-19807 (Revision : REV-002)
Tecnológico de Monterrey	KANBAN EXTERNAL SUPPLY	

Item	Bearing	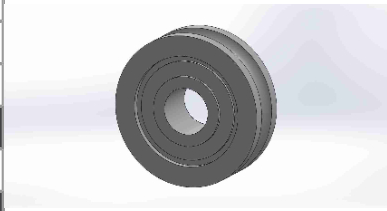
Supplier	Amazon	
Item No.	9	
Contact	Amazon	
Inventory location	Rack	
Subassebly station	WS3	
	Shelf	
	1	

Additional Info	
Buy at store	
Reorder At	Reorder Quantity
0 Pieces	5 Pieces

PART DESCRIPTION

Bearing

Location: Subassebly station

Rack: WS3 / Shelf: 1

Item #: 9

Crumbtrail

PART DESCRIPTION

Bearing

Location: Subassebly station

Rack: WS3 / Shelf: 1

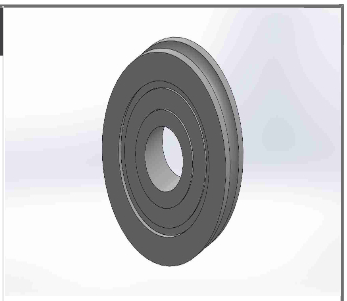

Item #: 9

PART DESCRIPTION

Bearing

Location: Subassebly station

Rack: WS3 / Shelf: 1

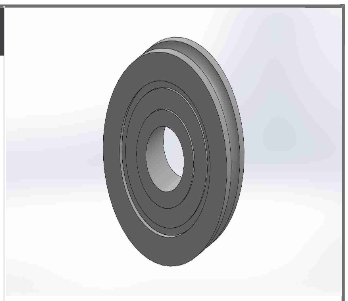

Item #: 9

PART DESCRIPTION

Bearing

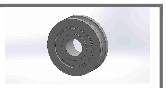

Item #: 9

KANBAN
TRACKING

Kaizenify

Order Date	Refill Date	Days

Notes