Tecnológico de Monterrey	FrED Factory	1748323422-19800 (Revision : REV-004)
	KANBAN EXTERNAL SUPPLY	
Item	Duct Fans 12v	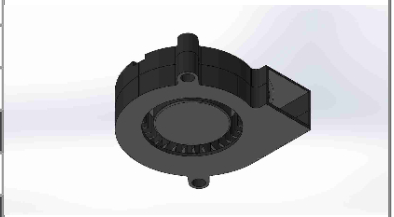
Supplier	Unit Electronics	
Item No.	3	
Contact	Unit Electronics	
Inventory location	Rack	
Subassembly Rack	Workstation 3	
	Shelf	
	1	
Additional Info		
Buy at store		
Reorder At	Reorder Quantity	
0 Pieces	10 Pieces	

PART DESCRIPTION	
Duct Fans 12v **Location: Subassembly Rack** **Rack: Workstation 3 / Shelf: 1**	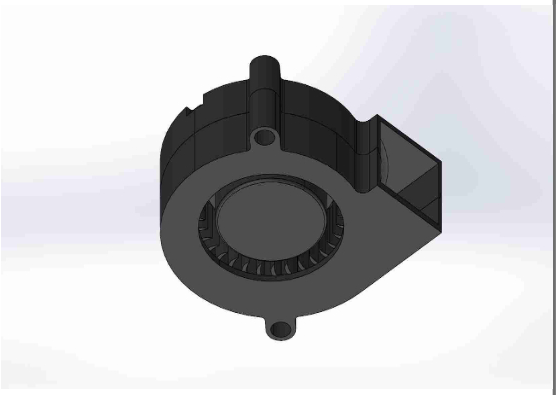 Item #: 3

Crumbtrail

PART DESCRIPTION	
Duct Fans 12v **Location: Subassembly Rack** **Rack: Workstation 3 / Shelf: 1**	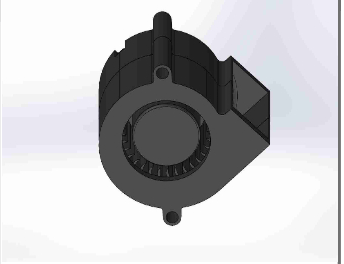 Item #: 3

PART DESCRIPTION	
Duct Fans 12v **Location: Subassembly Rack** **Rack: Workstation 3 / Shelf: 1**	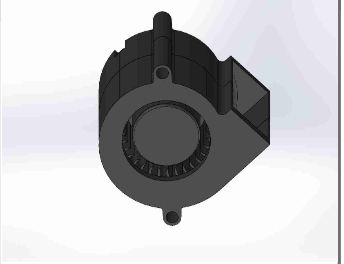 Item #: 3

PART DESCRIPTION	
Duct Fans 12v	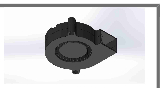 Item #: 3

KANBAN
TRACKING

Kaizenify

Order Date	Refill Date	Days

Notes