Tecnológico de Monterrey	FrED Factory	1748322557-19798 (Revision : REV-004)
	KANBAN INTERNAL SUPPLY	
Item	Fan System	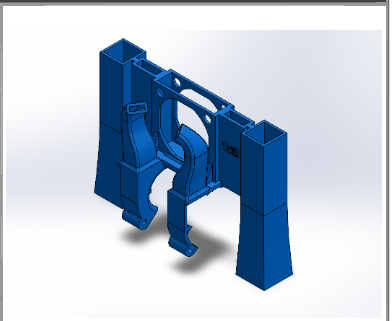
Supplier	3D Factory	
Item No.	1	
Contact	3D Factory	
Inventory location	Rack	
	Workstation #3	
	Shelf	
	1	
Additional Info		
Print using PLA		
Reorder At	Reorder Quantity	
0 Pieces	5 Pieces	

PART DESCRIPTION

Fan System

Location:

Rack: Workstation #3 / Shelf: 1

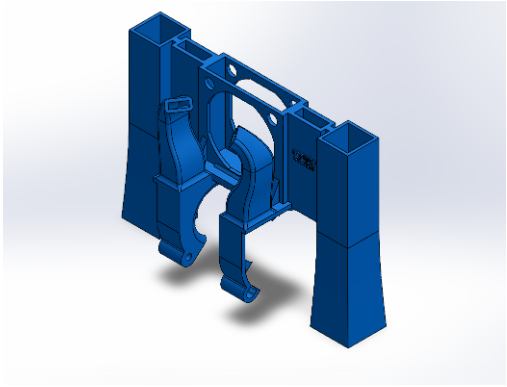

Item #: 1

Crumbtrail

PART DESCRIPTION

Fan System

Location:

Rack: Workstation #3 /

Shelf: 1

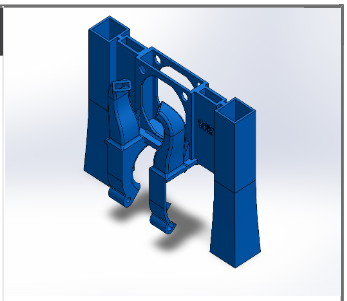

Item #: 1

PART DESCRIPTION

Fan System

Location:

Rack: Workstation #3 /

Shelf: 1

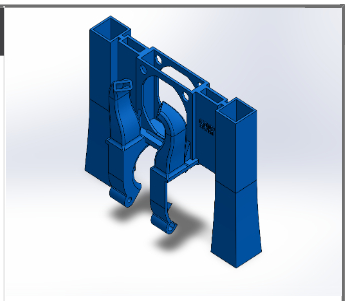

Item #: 1

PART DESCRIPTION

Fan System

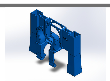

Item #: 1

KANBAN
TRACKING

Kaizenify

Order Date	Refill Date	Days

Notes