WORK STATION 3

Cooling System
KUKA

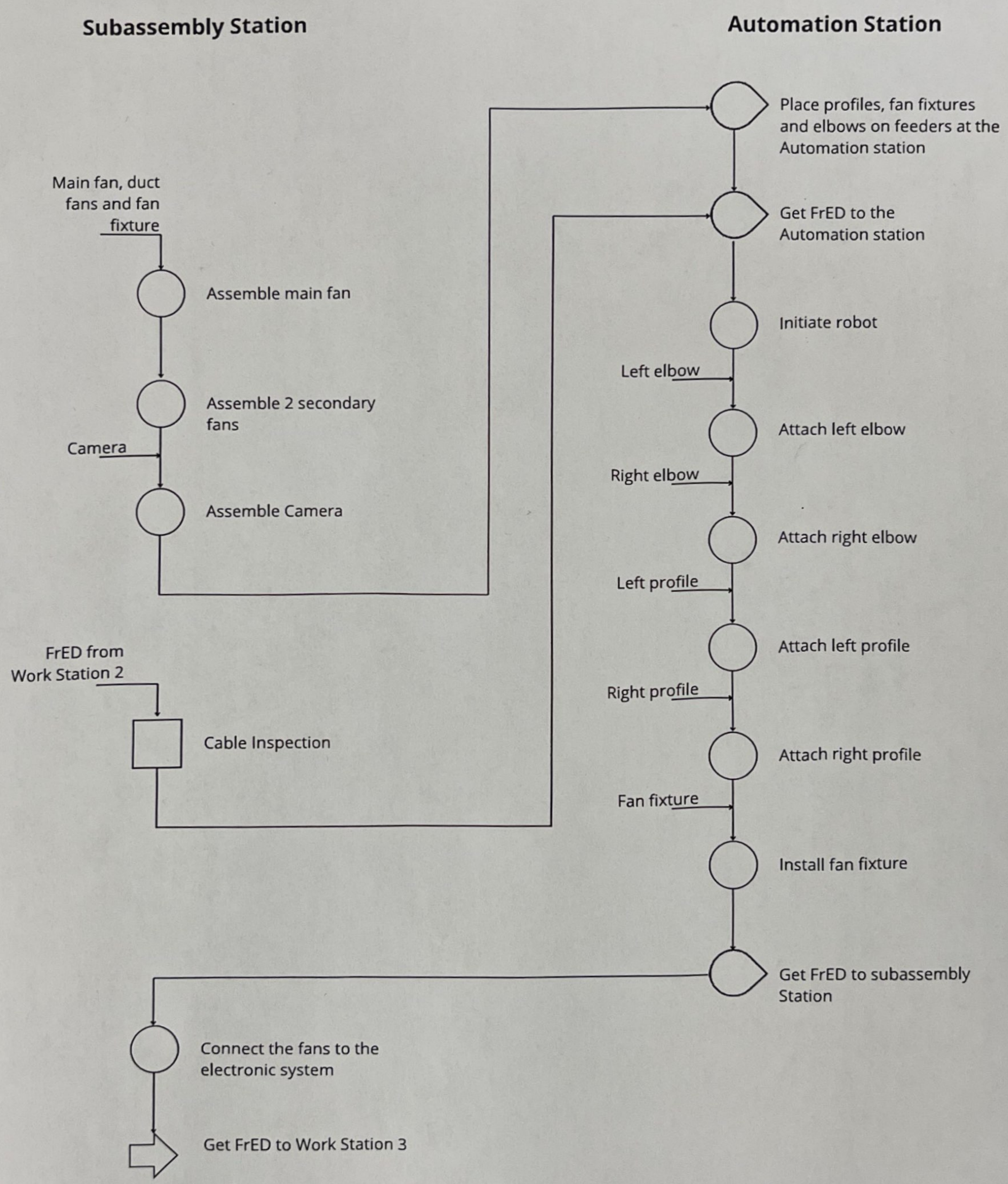

Scanned with CamScanner