A Stamp Extraction Method for Document Images Based on Generative Adversarial Networks

Jingyi Gu
School of Automation
Nanjing University of Science and Technology
Nanjing, Jiangsu, China
gujingyi@njust.edu.cn

Ming Lyu*
School of Automation
Nanjing University of Science and Technology
Nanjing, Jiangsu, China
lumtz@163.com

Jie Zhang
School of Automation
Nanjing University of Science and Technology
Nanjing, Jiangsu, China
zhangjie_njust@163.com

Abstract

With the digitalization of document images accelerates, there is a growing demand for processing relevant contents within these images. The diverse nature of document images, along with substantial variations in stamp position and color, poses a challenge for existing methods to accurately extract stamps. The inability of most existing methods to simultaneously preserve stamp integrity and suppress background noise presents significant obstacles to the digitalization of document images. To tackle this challenge, this paper proposes StampGAN, a generative adversarial network designed specifically for stamp extraction from document images. The proposed network employs ResAUNet (Residual Asymmetric UNet) as the generator and PatchGAN as the discriminator. It further integrates a mod-ASPP (modified Atrous Spatial Pyramid Pooling) module and a co-att (collaborative attention) module, facilitating the generation of the binary mask. To verify the efficacy of the proposed model, a dataset was developed for stamp extraction, and experiments were conducted across different methods. With gains of 1.46%, 2.20%, and 0.84% respectively in IoU, SSIM and F1-score, the model surpasses the best-performing existing methods, demonstrating its effectiveness and superiority.

CCS Concepts

• **Computing methodologies** → Computer graphics; Image manipulation; Image processing.

Keywords

Stamp extraction, Generative adversarial network, Image segmentation, Deep learning

ACM Reference Format:
Jingyi Gu, Ming Lyu, and Jie Zhang. 2025. A Stamp Extraction Method for Document Images Based on Generative Adversarial Networks. In *2025 2nd International Conference on Virtual Reality, Image and Signal Processing (VRISP 2025), September 12–14, 2025, Changsha, China.* ACM, New York, NY, USA, 9 pages. https://doi.org/10.1145/3772128.3772162

*Corresponding author

This work is licensed under a Creative Commons Attribution 4.0 International License.
VRISP 2025, Changsha, China
© 2025 Copyright held by the owner/author(s).
ACM ISBN 979-8-4007-1586-0/2025/09
https://doi.org/10.1145/3772128.3772162

1 INTRODUCTION

In the process of digitizing document images, stamps located at specific positions serve as important indicators of a document's authenticity and provenance. However, global color adjustment operations during digitization may distort or degrade stamp regions, compromising both visual integrity and document authenticity, which in turn hampers subsequent storage and processing. Therefore, prior extraction of stamps from document images is vital to preserve their fidelity during subsequent processing steps that might degrade visual quality.

Nevertheless, accurately isolating stamps in complex document scenarios poses significant challenges. Most existing studies on stamp extraction rely on traditional color space methods. These methods typically perform coarse extraction using fixed or adaptive thresholding based on color contrast between stamp and background, followed by clustering for fine segmentation[1-4]. However, such methods are effective only when stamps are brightly colored and exhibit significant contrast with the color of background. In cases where stamp color closely resembles that of background, threshold-based methods often fail to separate stamps effectively. Furthermore, factors such as stamping pressure and ink irregularities result in uneven stamp coloration, making traditional methods prone to partial stamp loss and background noise. Moreover, presence of text within stamps further complicates the extraction task. Due to high color similarity between stamps and surrounding text, particularly in overlapping regions, it is difficult to delineate stamp boundaries, introducing substantial noise. In addition, traditional methods exhibit poor generalization across different stamp types and imaging conditions.

Given these limitations, learning-based methods offer a promising alternative. Deep learning has achieved notable success in various image segmentation tasks, yet its application to stamp extraction remains limited, primarily to privacy concerns and the unavailability of extensive public datasets, which collectively impede the advancement of robust learning-based solutions. Therefore, stamp extraction from document images remains a research area of both high potential and practical importance[3,5,6].

In response to above challenges, this paper introduces a robust method for stamp extraction from document images, which supports both accurate extraction and restoration of stamps in processed images. This method offers substantial practical significance and supports digital preservation and downstream application of document images.

The main contributions of this paper are as follows:

1) We propose a generator network structure named ResAUNet (Residual Asymmetric UNet), which incorporates residual connections and cross-layer feature fusion into the UNet to balance deep semantic representation and fine detail preservation.

2) We design a modified Atrous Spatial Pyramid Pooling (mod-ASPP) module that reduces computational complexity through depthwise separable convolutions while enhancing edge-awareness by introducing an edge extraction branch to focus on fine-grained boundary features.

3) We introduce a collaborative attention module (co-att) that sequentially integrates Squeeze-and-Excitation (SE) and two successive Criss-Cross Attention (CCA) operations, thereby enhancing channel-wise and spatial attention in a complementary manner.

4) We construct a stamp extraction dataset to support and evaluate high-precision stamp extraction tasks.

2 RELATED WORKS

2.1 Image segmentation

Stamp extraction from document images refers to identifying and segmenting stamps from image background. The task is essentially aligned with semantic or binary segmentation, where objects of a specific category are extracted from complex visual scenes.

In recent years, numerous advanced methods have emerged in semantic segmentation, medical image segmentation and binary segmentation, offering new insights for related research. HRNet-OCR [7], which combines High-Resolution Network [8] with an object contextual representation (OCR) module, effectively enhances pixel-level contextual modeling and has achieved significant performance improvements in semantic segmentation tasks. ConvNeXt [9], inspired by the design principle of vision transformers, introduces a pure convolutional structure while reaching comparable performance with transformer-based models, demonstrating that convolutional neural networks still possess strong representation capabilities in semantic segmentation tasks. Based on this structure, further improvements have been made through ConvNeXt V2 [10] and InceptionNeXt [11], which explore innovations in convolutional operations and architectural fusion to boost segmentation accuracy. In addition, MWP-SegNet [12] incorporates wavelet transform into convolutional networks by replacing conventional downsampling with discrete wavelet transform. Combined with dictionary-based histogram matching, this design supports effective multi-scale processing and enhances alignment between image features and wavelet subbands, leading to improved segmentation performance.

Meanwhile, medical image segmentation has witnessed significant advancements in recent years. DR-Net [13] introduces a dual-rotation strategy, where different rotation strategies are applied to each layer to generate multi-directional feature mappings. The final feature fusion leverages residual and ensemble strategies to enhance segmentation performance. SACU-Net [14] improves the UNet structure by incorporating an MRC (multi residual convolution) module for capturing high-level semantic features, and a RMP (residual multi-kernel pooling) module to extract multi-scale contextual information and enhance feature representation. Additionally, a SAR (spatial channel and gateway attention) module is embedded in the skip connections to integrate spatial and channel attention, enabling weighted fusion of salient features and further improving segmentation accuracy. PraNet-V2 [15] improves upon the original RA (Reverse Attention) module [16], which suffers from uncertainty due to its reliance on forward attention and lack of independent contextual information. To mitigate this issue, the proposed DSRA (Dual-Supervised Reverse Attention) module incorporates decoupled foreground and background attention to enhance segmentation accuracy. CTO [17] employs a dual-stream encoder consisting of a CNN stream and a ViT stream to more effectively extract and fuse features. It also introduces a boundary-guided decoder, where boundary guidance and boundary injection modules use edge information as a prior to assist feature generation, leading to superior segmentation performance.

Recent methods in the domain of binary segmentation developed for salient object segmentation provide efficient and accurate solutions for generating high-quality binary masks. To improve supervision in binary segmentation tasks, IS-Net [18] extends U^2-Net by incorporating a GT encoder for stage-wise supervision via progressive downsampling of ground truth masks. This multi-level supervision strategy provides stronger structural consistency and more comprehensive guidance, improving the performance in binary segmentation. To address the challenge of small object segmentation in infrared images, UCFNet [19] proposes a CDC (central difference convolution) module, inspired by human visual system, along with a FFC (fast Fourier convolution) module. By leveraging transformations between spatial and frequency domains, the model enhances feature extraction for small infrared targets, significantly improving segmentation accuracy. UDUN [20] takes high and low-resolution inputs, extracts features through a shared backbone, and employs separate trunk and structural decoders to capture foreground and structural features, which are then fused in a joint decoder, where structural representations are refined through attention to enhance the final segmentation. To address the loss of fine-grained features and high computational cost in high-resolution segmentation, MVANet [21] introduces a multi-view strategy that integrates distant and close-up views. It proposes a MCLM (multi-view complementary localization module) to enhance local features with global context, and a MCRM (multi-view complementary refinement module) to refine global features with local details, leading to more precise segmentation outputs.

2.2 Stamp extraction

Stamp extraction task aims to achieve pixel-level accurate localization of stamp regions within images. Specifically, this process generates a binary mask that delineates stamp area, enabling the separation of chromatic stamp pixels from background and effectively suppressing irrelevant interference.

Significant research efforts have focused on stamp extraction methods for document images. Traditional stamp extraction methods primarily rely on color and texture features, utilizing color-space thresholding to delineate stamp regions. Wang et al. [1] target red stamp extraction by employing Linear Discriminant Analysis (LDA) to differentiate between the red and black components, and remove background components using local thresholds derived from small connected components. Another method [2] combines local thresholding with HSV-space clustering and color distance

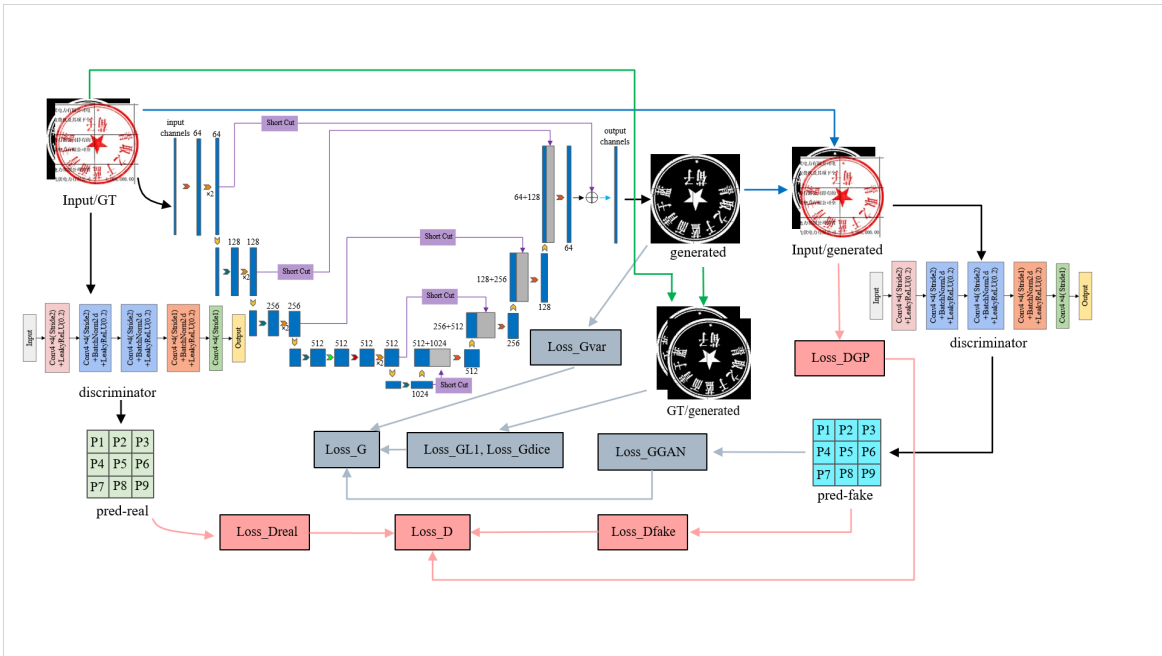

Figure 1: Overview of the StampGAN architecture.

measures in RGB and HSV to separate stamps from black text. Rajab and George[3] integrate clustering with ISODATA algorithm and apply region-growing based on 8-neighborhood connectivity to generate a binary mask. Lin et al.[4] apply RGB-based clustering to identify color centers, followed by foreground smoothing and binarization to suppress noise and enhance stamp clarity.

In addition, some deep learning methods have been used for stamp extraction. D-Star [5] employs a pre-trained VGG in conjunction with a fully convolutional network to perform pixel-level prediction and extraction of stamps in document images. Corring et al. [22] propose a GAN-based architecture that integrates UNet and FCN within the generator, enhanced by spatial attention to suppress redundant information. A PatchGAN discriminator is employed to guide the generator toward more accurate and detailed stamp extraction. SealNet [23] employs a UNet-based generator augmented with CBAM, and enriched by texture features from a pre-trained VGG-19 to generate high-quality stamp masks, with a PatchGAN discriminator ensuring visual realism. SERGAN [6], built upon CycleGAN [24], comprises a dual-generator network to decompose and recompose stamp and background components, supported by three PatchGAN-based discriminators targeting stamps, backgrounds, and reconstructed outputs. Attention-augmented UNet structure and adversarial learning facilitate precise and resilient stamp separation.

3 METHODS

3.1 Stamp extraction model

To achieve accurate stamp extraction from document images, this paper introduces StampGAN, a GAN-based architecture. As illustrated in Figure 1, the generator is built upon ResAUNet, which enhances the generation of stamp masks. Two specialized modules are integrated to enhance feature perception and extraction: a mod-ASPP module, which incorporates edge-aware atrous spatial pyramid pooling for better structural detail representation, and a co-att module, which leverages attention mechanisms to refine contextual features. The architecture is further optimized with a custom-designed loss function, which encourages the generated stamp masks to more closely align with the ground truth.

To effectively extract and integrate multi-scale feature representations, this paper introduces ResAUNet, which incorporates residual connections, a U-shaped encoder-decoder structure, and a cross-layer feature fusion mechanism, as depicted in Figure 2. To enhance feature propagation and transformation, residual blocks are incorporated into last four layers of the encoder. This design alleviates issues such as vanishing gradients, training instability, and network degradation, while preserving crucial semantic information in deeper layers. Additionally, residual blocks are embedded into first four encoder layers to extract more abstract features, enhancing feature representation and reuse capabilities. To further augment the encoder's capacity for structural and contextual information, a mod-ASPP module is incorporated after the residual block of the fourth encoder layer. This module strengthens multi-scale feature extraction and enhances edge-level representations, improving the capture and retention of fine-grained boundary details. Following the mod-ASPP processing, a co-att module is introduced to refine feature maps by emphasizing salient channel-wise and spatial responses while suppressing irrelevant information. Rather than using the standard symmetric skip connections in UNet, a cross-layer feature fusion strategy is adopted, in which high-level semantic features are leveraged to refine low-level representations. Ultimately, the generator produces a stamp mask, which undergoes

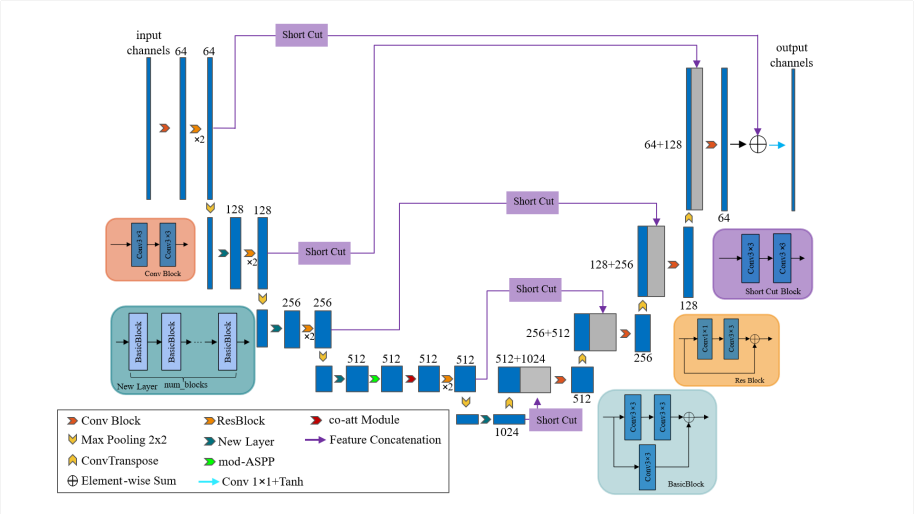

Figure 2: Overview of the generator structure.

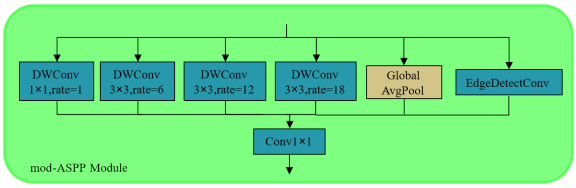

Figure 3: Overview of the mod-ASPP module.

a simple post-processing step via binary thresholding with an intensity cutoff of 128. Pixels exceeding the threshold are classified as stamp, and the rest as background, yielding the final binary mask.

Moreover, the discriminator adopts PatchGAN [25], which partitions input image into fixed-size patches via a sliding window mechanism. Each patch is independently assessed for authenticity, and final output is computed by averaging the authenticity scores across all patches.

3.2 mod-ASPP module

To better capture multi-scale features of stamp images and alleviate boundary blurring and fragmentation commonly induced by dilated convolutions in ASPP (Atrous Spatial Pyramid Pooling) [26], we introduce a mod-ASPP module, as depicted in Figure 3. The dedicated edge extraction branch with a 3×3 convolution is integrated to retain fine-grained edge details.

ASPP module is effective in capturing multi-scale contextual features, while its reliance on dilated convolutions can lead to sparse receptive fields, which often results in blurred, unclear, or even broken edges and excessive smoothness in generated masks. To address this issue, and inspired by CTO [17], this paper enhances the ASPP module by introducing an edge extraction branch, while preserving its multi-scale feature extraction capability.

Moreover, accurately preserving boundaries remains a challenging task, especially in cases where low contrast or blurred edges are present. Traditional edge detection methods, such as Sobel operator and other fixed-gradient-based templates, can extract edge information efficiently. However, these methods suffer from poor robustness and limited adaptability, especially in scenarios involving complex backgrounds or low-contrast boundaries, making them inadequate for accurate edge representation. To overcome these limitations, this paper adopts a learnable convolutional layer in the edge branch. This enables the model to autonomously learn edge features tailored to the specific task, improving its ability to capture fine-grained structural details and enhancing the clarity of the generated masks. Furthermore, ASPP module employs standard convolutions, which are computationally expensive. To improve efficiency, this paper replaces standard convolutions with depthwise separable convolutions [27], significantly reducing computational cost while maintaining segmentation performance.

3.3 Attention enhancement module

In order to guide attention toward salient feature regions, this paper introduces an attention enhancement module, co-att, which integrates SE attention [28] with CCA attention [29]. The structure of the module is illustrated in Figure 4.

To enhance critical channel-wise and spatial features, this paper proposes a unified attention module that integrates two attention mechanisms in a cascaded manner. SE module is firstly employed to strengthen informative channels and suppress irrelevant ones, generating channel-weighted feature representations. The channel-enhanced features are passed through a convolutional layer to further fuse channel information, and subsequently fed into two cascaded CCA modules to capture global spatial dependencies and model long-range interactions. Since a single CCA module captures contextual information only along the row and column of each pixel, which limits its spatial representation capacity. By stacking two CCA modules, the network can progressively aggregate contextual information from a broader range of multiple pixel positions, effectively approximating a global receptive field. The spatially

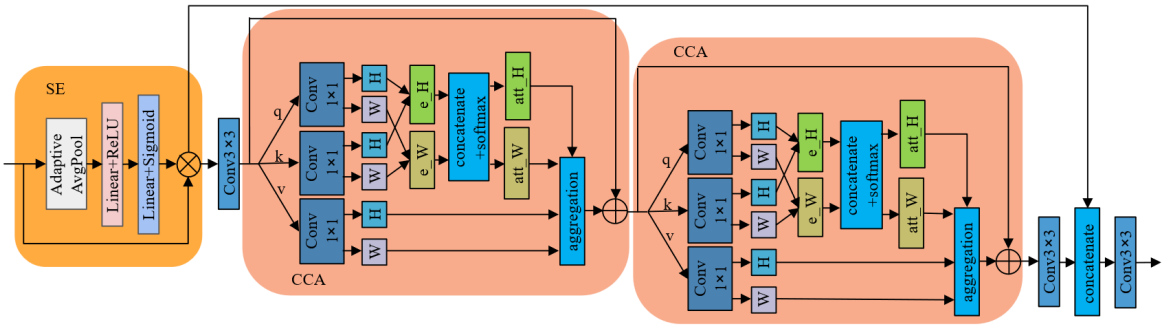

Figure 4: Overview of the co-att Module.

weighted features produced by CCA modules are fused through another convolutional layer. Finally, the spatially refined features are concatenated with the channel-attentive features and passed through an additional convolutional layer for joint fusion, resulting in enhanced feature representations.

3.4 Feature fusion strategy

Traditional U-shaped structure is strictly symmetrical. While it offers strong semantic representation capabilities, its reconstruction ability is limited, particularly in details. Additionally, information transmission within the same layer lacks guidance from high-level semantic information, making it prone to overlooking global context.

To address these limitations, this paper adopts an asymmetric cross-layer feature fusion strategy, in which features at each decoding stage are progressively integrated with transformed representations from adjacent encoder layers. This top-down semantic guidance facilitates the refinement of low-level feature reconstruction by leveraging high-level contextual information, enhancing boundary delineation, especially in regions with complex structural variations.

To mitigate shape mismatches arising from direct feature transfer, the proposed strategy utilizes a Short Cut module to adaptively transform the encoder features at each layer. The processed features are propagated to the decoder and spatially aligned via bilinear interpolation during upsampling process. As illustrated by purple arrows in Figure 2, for final four encoder layers, output of the N-th encoder layer is processed through the Short Cut module, interpolated to match the spatial resolution of the (N-1)-th decoder layer, and subsequently concatenated along the channel dimension, achieving the integration of deep semantic representations and fine-grained structural details. For the first encoder layer, the output is processed by the Short Cut module, aligned to the resolution of the first decoder layer, and fused with the output of the first decoder layer through element-wise addition. By leveraging the synergy between high-level semantic features and low-level fine-grained details, the proposed strategy integrates multi-level feature information, enhances the capacity to preserve structural nuances and enables detail-aware reconstruction guided by global semantic context.

3.5 Loss Function

For stamp extraction task, the generator is trained with a composite loss function comprising adversarial loss, L1 loss, Dice loss [30], and total variation (TV) loss [31]. These losses jointly promote accurate stamp mask generation by balancing pixel-wise fidelity, contour alignment, and smoothness. Meanwhile, to mitigate mode collapse, a common issue in GAN-based training, the discriminator follows the Wasserstein GAN with Gradient Penalty (WGAN-GP) formulation [32], optimizing the Wasserstein distance between real and generated samples by penalizing the gradients to enforce Lipschitz continuity, which enhances training stability and convergence. The overall loss function is defined in Equation 1. Specifically, the weights of the adversarial and L1 losses follow the settings proposed by Isola et al. [25] to ensure stable image reconstruction and adversarial training, while the weights of the discriminator loss are adopted from the configuration in Gulrajani et al. [32]. Considering the relatively small magnitude of Dice and TV losses during training, and their respective roles in enhancing region-level accuracy and encouraging spatial smoothness, we empirically assign weights of 80 and 50, respectively, to maintain a balanced optimization influence within the composite loss function.

$$\begin{aligned} L_{\text{loss}G} &= L_{\text{loss}_{GAN}} + 100 * L_{\text{loss}_{L1}} + 80 * L_{\text{loss}_{Dice}} + 50 * L_{\text{loss}_{TV}} \\ L_{\text{loss}D} &= L_{\text{loss}D_{\text{fake}}} - L_{\text{loss}D_{\text{real}}} + 10 * L_{\text{loss}GP} \end{aligned} \quad (1)$$

4 EXPERIMENTS

4.1 Dataset

Accurate extraction of stamps from document images necessitates access to a high-quality annotated dataset. However, owing to privacy concerns and limited public availability, there currently exists no large-scale benchmark dataset suitable for training and evaluating. To bridge this gap, this paper constructs a stamp extraction dataset, derived from the stamp removal dataset introduced by Yang et al. [33]. The dataset consists of 6,250 annotated samples, with 5,000 allocated for training and 1,250 for testing.

4.2 Implementation details

In this paper, all experiments were conducted on an NVIDIA GeForce RTX 3070 Laptop GPU. The training was performed over 100 epochs using Adam optimizer, with an initial learning rate of 1×10^{-4} that decayed gradually via a cosine annealing schedule to facilitate stable convergence. The batch size was set to 4, and

Table 1: Comparison results of different methods.

	SSIM↑	IoU↑	F1↑
pix2pix[25]	0.8637	81.81	92.65
CCNet[29]	0.7703	65.45	78.03
HRNet-OCR[7]	0.8805	84.52	91.41
FLANet[34]	0.8231	75.39	85.43
UCFNet[19]	0.8904	87.93	91.82
MVANet[21]	0.8677	86.75	89.50
CTO[17]	0.8872	85.18	91.82
FSANet[35]	0.8777	82.94	93.36
Ours	**0.9100**	**89.21**	**94.14**

all input images were set to 256×256. Following the principles of WGAN-GP, the discriminator was updated five times prior to each generator update to better approximate the Wasserstein distance and enhance training stability.

4.3 Metrics

In this paper, Intersection over Union (IoU), Structural Similarity Index Measure (SSIM), and F1-score were used as evaluation metrics, which respectively reflect the region-level overlap, structural fidelity, and classification accuracy between the predicted masks and ground truth.

4.4 Comparison

To evaluate the effectiveness of the proposed method, we conducted experiments on the stamp extraction dataset and compared the results with several representative baseline methods. Although several prior studies have investigated stamp extraction, these works have not released implementation details, such as source code or pretrained models, hindering direct and fair comparisons. To address this limitation, we curated a representative set of models from the domains of semantic segmentation, medical image segmentation, and binary segmentation for comparative analysis. These models were selected based on their demonstrated effectiveness in addressing challenges similar to those encountered in stamp extraction, and their architectural properties render them suitable surrogates in the absence of publicly available stamp-specific baselines. In addition, considering that the proposed method can be regarded as a domain transfer task and employs a GAN-based architecture, we also included pix2pix [25] as a baseline for comparison. The results are summarized in Table 1, with the best results among the comparison models underlined for clarity.

The results presented in Table 1 demonstrate that the proposed model achieves superior performance in terms of IoU, SSIM, and F1-score, outperforming the strongest baseline by 1.46%, 2.20%, and 0.84%, respectively. However, several existing methods still fall short on the stamp extraction task due to domain-specific challenges and the distinct structural properties of stamps. Most conventional semantic or medical image segmentation methods are designed for objects with structurally complete, spatially continuous, and compact regions. In contrast, stamps often feature internal voids, broken strokes, and complex textures, leading to fragmented boundaries and irregular spatial layouts that pose significant challenges for segmentation methods.

To further quantify the performance differences among various methods on the stamp extraction task, Figure 5 provides a visual analysis of stamp extraction results generated by various models.

As illustrated in the figure, methods based on semantic or medical image segmentation tend to generate stamp masks with blurred edges, pronounced aliasing artifacts, and character adhesion, which hinder accurate separation and restoration of stamp regions. These issues stem from their focus on global region classification while neglecting fine-grained boundaries, structural irregularities, and character-level details inherent to stamps, all of which are essential for achieving high-quality results in downstream restoration tasks. Although binary segmentation methods demonstrate relatively better performance in stamp extraction, the generalization remains limited. In particular, they often produce fractured regions when processing faint-colored stamps and yield blurred or indistinct edges around text components, compromising the structural integrity of extracted masks. This is largely due to the inadequate modeling of local details and internal fine structures within the stamp area. While pix2pix is capable of segmenting a substantial portion of stamp pixels, its performance deteriorates in the presence of complex backgrounds. In cases where the stamp color closely resembles the background or strong visual interference occurs, the model becomes prone to noise artifacts, further impairing the quality of stamp restoration.

In contrast, the proposed method strikes a better balance between completeness and precision in stamp extraction, while also demonstrating greater robustness against background noise. As a result, it achieves more accurate and consistent stamp extraction outcomes. The generated stamp masks exhibit high boundary accuracy and structural integrity, highlighting the superior capability in capturing edge details and fine-grained features.

4.5 Ablation Studies

To assess the contribution of each component within the proposed StampGAN architecture, an ablation study was performed under the same experimental settings as described in Section 4.2. The results, summarized in Table 2, examine the effectiveness of the proposed ResAUNet structure, mod-ASPP module, and co-att module, both individually and in combination.

As shown in Table 2, each component contributes positively to the overall performance of stamp extraction. Individually, the ResAUNet structure facilitates deeper feature extraction and integrates multi-level representations, improving segmentation quality and validating the advantages of the design and feature fusion strategy. While ASPP module is capable of capturing multi-scale contextual information, it suffers from imprecise edge delineation and overly smooth transitions. By incorporating an edge extraction branch, mod-ASPP module enhances spatial localization and preserves fine-grained boundary details, boosting the overall extraction performance. Additionally, co-att module, composed of both channel-wise and spatial attention mechanisms, amplifies salient features while suppressing background inference, yielding consistent performance gains.

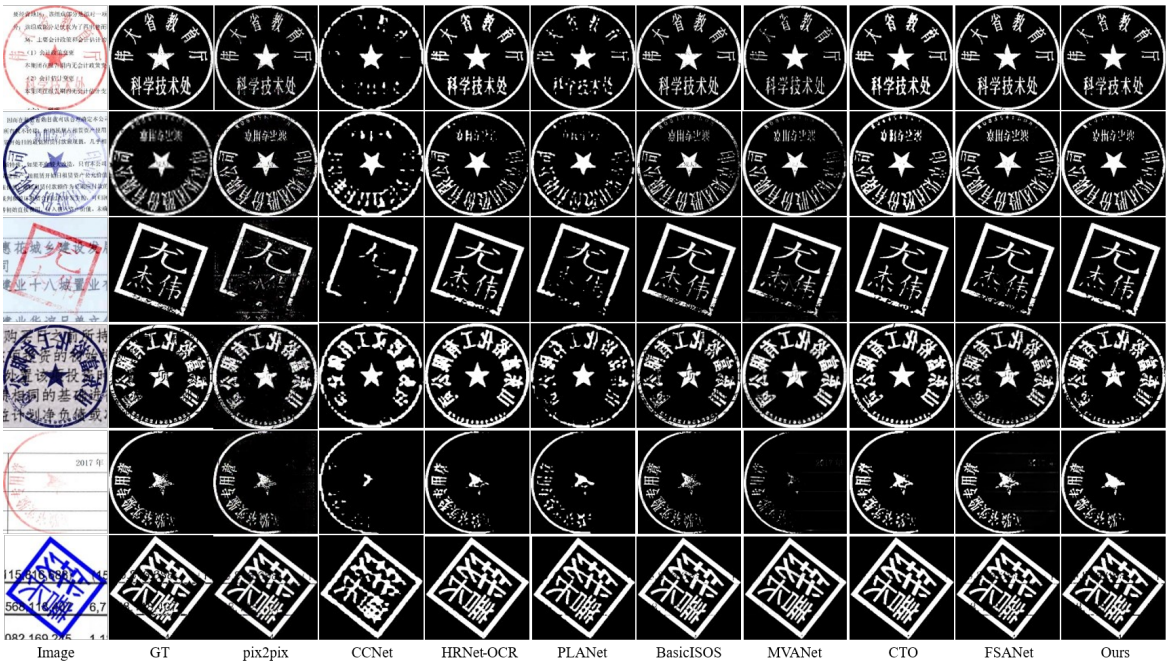

Figure 5: Visualization results of various stamp extraction methods.

Table 2: Results of ablation experiments.

ResAUNet	ASPP	mod-ASPP	co-att	SSIM↑	IoU↑	F1↑
×	×	×	×	0.8943	86.76	92.64
√	×	×	×	0.9036	87.82	93.23
×	√	×	×	0.8909	85.53	91.83
×	×	√	×	0.9060	88.28	93.56
×	×	×	√	0.8997	87.83	93.31
√	√	×	×	0.9060	88.66	93.81
√	×	√	×	0.9072	88.88	93.94
√	×	×	√	0.9069	88.72	93.82
×	√	×	√	0.9042	88.38	93.66
×	×	√	√	0.9076	88.90	93.96
√	√	×	√	0.9060	88.65	93.81
√	×	√	√	**0.9100**	**89.21**	**94.14**

In combination, the proposed modules exhibit strong complementarity. Pairwise configurations consistently outperform their individual counterparts, demonstrating that each module adds unique value. Notably, mod-ASPP achieves better results than ASPP when combined with other modules, highlighting the effectiveness of edge-aware design. Moreover, incorporating co-att module alongside either ASPP or mod-ASPP further boosts performance, especially when coupled with edge-aware guidance. The full integration of all three modules achieves the best overall results, indicating a synergistic effect among deep semantic extraction, edge-preserving feature fusion, and attention-guided refinement. These results confirm that each module provides distinct and non-redundant contributions. Their combinations not only enhance the ability to capture complex stamp structures but also improve robustness in challenging scenarios, validating the overall effectiveness of the proposed architecture.

5 CONCLUSION

This paper introduces StampGAN, a generative adversarial network tailored for the stamp extraction task. The proposed architecture facilitates multi-domain translation, particularly mapping stamp images to the corresponding binary mask representations. In this formulation, foreground stamp regions are represented by white pixels and background by black pixels in the binary mask, achieving effective and precise stamp segmentation. Compared to existing methods that often struggle with background noise and limited

generalization, the proposed method attains a better balance between accuracy, completeness, and robustness to noise. Comprehensive comparative experiments show that the proposed method consistently delivers more precise and refined extraction results. Quantitatively, StampGAN outperforms the strongest baseline by 1.46%, 2.20%, and 0.84% in IoU, SSIM, and F1-score, respectively. Furthermore, to address the lack of publicly available datasets for the stamp extraction task, we construct a dataset consisting of 6,250 annotated stamp images, derived from a stamp removal dataset, which can serve as a valuable resource for future research.

This study primarily focuses on red and blue stamps, without exploring stamps of other colors. Additionally, the current model still leaves room for improvement in recovering fine-grained details. In future work, we aim to extend the method to accommodate stamps of diverse colors and further refine the model to achieve more robust and accurate stamp extraction performance.

References

[1] Chengyun Wang, Zhenhua Guo, and Youbin Chen. 2014. Seal Extraction Based on Local Thresholding Techniques and Color Analysis. In 2014 International Conference on Service Sciences. 79-84. https://doi.org/10.1109/ICSS.2014.24

[2] Cheng Yun Wang and You Bin Chen. 2014. Seal Extraction Based on Clustering and Local Thresholding Techniques. In Progress in Applied Sciences, Engineering and Technology (Advanced Materials Research, Vol. 926). Trans Tech Publications Ltd, 3467-3470. https://doi.org/10.4028/www.scientific.net/AMR.926-930.3467

[3] Maha Abd Rajab and Loay E. George. 2021. Stamps extraction using local adaptive k-means and ISODATA algorithms. Indonesian Journal of Electrical Engineering and Computer Science 21 (2021), 137-145. https://api.semanticscholar.org/CorpusID:224987954

[4] Lin Xinyi, Wu Hongjia, Yuan Zhiting, Zhang Hongxin, and Chen Wei. 2025. Computer Aided Analysis of Ancient Painting Seals Based on Image Extraction and Restoration. Journal of Computer-Aided Design & Computer Graphics 37, 2 (2025), 254-264. https://www.jcad.cn/en/article/doi/10.3724/SP.J.1089.2023-00343

[5] Junaid Younas, Muhammad Zeshan Afzal, Muhammad Imran Malik, Faisal Shafait, Paul Lukowicz, and Sheraz Ahmed. 2017. D-staR: A Generic Method for Stamp Segmentation from Document Images. In 2017 14th IAPR International Conference on Document Analysis and Recognition (ICDAR), Vol. 01. 248-253. https://doi.org/10.1109/ICDAR.2017.49

[6] Guohao Cui, CihuiYang, and Jianyong Guo. 2024. Generative adversarial networks for rubber stamp extraction and removal. Digital Signal Processing 146 (2024), 104358. https://doi.org/10.1016/j.dsp.2023.104358

[7] Yuhui Yuan, Xiaokang Chen, Xilin Chen, and Jingdong Wang. 2021. Segmentation Transformer: Object-Contextual Representations for Semantic Segmentation. arXiv: 1909.11065 [cs.CV] https://arxiv.org/abs/1909.11065

[8] Jingdong Wang, Ke Sun, Tianheng Cheng, Borui Jiang, Chaorui Deng, Yang Zhao, Dong Liu, Yadong Mu, Mingkui Tan, Xinggang Wang, Wenyu Liu, and Bin Xiao. 2021. Deep High-Resolution Representation Learning for Visual Recognition. IEEE Transactions on Pattern Analysis and Machine Intelligence 43, 10 (2021), 3349-3364. https://doi.org/10.1109/TPAMI.2020.2983686

[9] Zhuang Liu, Hanzi Mao, Chao-Yuan Wu, Christoph Feichtenhofer, Trevor Darrell, and Saining Xie. 2022. A ConvNet for the 2020s. In 2022 IEEE/CVF Conference on Computer Vision and Pattern Recognition (CVPR). 11976-11986. https://doi.org/10.1109/CVPR52688.2022.01167

[10] Sanghyun Woo, Shoubhik Debnath, Ronghang Hu, Xinlei Chen, Zhuang Liu, In So Kweon, and Saining Xie. 2023. ConvNeXt V2: Co-designing and Scaling ConvNets with Masked Autoencoders. In 2023 IEEE/CVF Conference on Computer Vision and Pattern Recognition (CVPR). 16133-16142. https://doi.org/10.1109/CVPR52729.2023.01548

[11] Weihao Yu, Pan Zhou, Shuicheng Yan, and Xinchao Wang. 2024. InceptionNeXt: When Inception Meets ConvNeXt. In 2024 IEEE/CVF Conference on Computer Vision and Pattern Recognition (CVPR). 5672-5683. https://doi.org/10.1109/CVPR52733.2024.00542

[12] Said El-Khamy, Shimaa El-Bana, Ahmad Al-Kabbany, and Hassan Elragal. 2025. Toward better semantic segmentation by retaining spectral information using matched wavelet pooling. Neural Computing and Applications 37, 10 (2025), 7049-7066. https://doi.org/10.1007/s00521-025-11008-9

[13] Hongfeng You, Long Yu, Shengwei Tian, and Weiwei Cai. 2022. DR-Net: dual-rotation network with feature map enhancement for medical image segmentation. Complex & Intelligent Systems 8, 1 (2022), 611-623. https://doi.org/10.1007/s40747-021-00525-4

[14] Yinuo Cao and Yong Cheng. 2025. SACU-Net: Shape-Aware U-Net for Biomedical Image Segmentation with Attention Mechanism and Context Extraction. IEEE Access 13 (2025), 5719-5730. https://doi.org/10.1109/ACCESS.2025.3526602

[15] Bo-Cheng Hu, Ge-Peng Ji, Dian Shao, and Deng-Ping Fan. 2025. PraNet-V2: Dual-Supervised Reverse Attention for Medical Image Segmentation. arXiv:2504.10986[cs.CV]. https://arxiv.org/abs/2504.10986

[16] Deng-Ping Fan, Ge-Peng Ji, Tao Zhou, Geng Chen, Huazhu Fu, Jianbing Shen, and Ling Shao. 2020. PraNet: Parallel Reverse Attention Network for Polyp Segmentation. In Medical Image Computing and Computer Assisted Intervention – MICCAI 2020. Springer International Publishing, Cham, 263-273. https://doi.org/10.1007/978-3-030-59725-2_26

[17] Yi Lin, Dong Zhang, Xiao Fang, Yufan Chen, Kwang-Ting Cheng, and Hao Chen. 2025. Rethinking boundary detection in deep learning-based medical image segmentation. Medical Image Analysis 103 (2025), 103615. https://doi.org/10.1016/j.media.2025.103615

[18] Xuebin Qin, Hang Dai, Xiaobin Hu, Deng-Ping Fan, Ling Shao, and Luc Van Gool. 2022. Highly Accurate Dichotomous Image Segmentation. In Computer Vision – ECCV 2022. Springer Nature Switzerland, Cham, 38-56. https://doi.org/10.1007/978-3-031-19797-0_3

[19] Chenyi Wang, Huan Wang, and Peiwen Pan. 2023. Local Contrast and Global Contextual Information Make Infrared Small Object Salient Again. arXiv:2301.12093[cs.CV] https://arxiv.org/abs/2301.12093

[20] Jialun Pei, Zhangjun Zhou, Yueming Jin, He Tang, and Pheng-Ann Heng. 2023. Unite-Divide-Unite: Joint Boosting Trunk and Structure for High-accuracy Dichotomous Image Segmentation. In Proceedings of the 31st ACM International Conference on Multimedia (Ottawa ON, Canada) (MM '23). Association for Computing Machinery, New York, NY, USA, 2139-2147. https://doi.org/10.1145/3581783.3611811

[21] Qian Yut, Xiaoqi Zhao, Youwei Pang, Lihe Zhang, and Huchuan Lu. 2024. Multi-View Aggregation Network for Dichotomous Image Segmentation. In 2024 IEEE/CVF Conference on Computer Vision and Pattern Recognition (CVPR). 3921-3930. https://doi.org/10.1109/CVPR52733.2024.00376

[22] John Corring, Jinsol Lee, Florian Luisier, and Dinei Florencio. 2022. Layer Separation via a Spatial-Attention GAN. In 2022 26th International Conference on Pattern Recognition (ICPR). 3231-3237. https://doi.org/10.1109/ICPR56361.2022.9956258

[23] Xin Jin, Qiuyang Mu, Xiaoyu Chen, Qingyu Liu, and Chaoen Xiao. 2024. Digital Archive Stamp Detection and Extraction. In Artificial Intelligence and Robotics. Springer Nature Singapore, Singapore, 165-174. https://doi.org/10.1007/978-981-99-9109-9_16

[24] Jun-Yan Zhu, Taesung Park, Phillip Isola, and Alexei A. Efros. 2017. Unpaired Image-To-Image Translation Using Cycle-Consistent Adversarial Networks. In 2017 IEEE International Conference on Computer Vision (ICCV). 2242-2251. https://doi.org/10.1109/ICCV.2017.244

[25] Phillip Isola, Jun-Yan Zhu, Tinghui Zhou, and Alexei A. Efros. 2017. Image-To-Image Translation With Conditional Adversarial Networks. In Proceedings of the IEEE Conference on Computer Vision and Pattern Recognition (CVPR). 1125-1134.

[26] Liang-Chieh Chen, George Papandreou, Iasonas Kokkinos, Kevin Murphy, and Alan L. Yuille. 2018. DeepLab: Semantic Image Segmentation with Deep Convolutional Nets, Atrous Convolution, and Fully Connected CRFs. IEEE Transactions on Pattern Analysis and Machine Intelligence 40, 4 (2018), 834-848. https://doi.org/10.1109/TPAMI.2017.2699184

[27] Andrew G. Howard, Menglong Zhu, Bo Chen, Dmitry Kalenichenko, Weijun Wang, Tobias Weyand, Marco Andreetto, and Hartwig Adam. 2017. MobileNets: Efficient Convolutional Neural Networks for Mobile Vision Applications. arXiv:1704.04861[cs.CV] https://arxiv.org/abs/1704.04861

[28] Jie Hu, Li Shen, and Gang Sun. 2018. Squeeze-and-Excitation Networks. In 2018 IEEE/CVF Conference on Computer Vision and Pattern Recognition (CVPR). 7132-7141. https://doi.org/10.1109/CVPR.2018.00745

[29] Zilong Huang, Xinggang Wang, Lichao Huang, Chang Huang, Yunchao Wei, and Wenyu Liu. 2019. CCNet: Criss-Cross Attention for Semantic Segmentation. In 2019 IEEE/CVF International Conference on Computer Vision (ICCV). 603-612. https://doi.org/10.1109/ICCV.2019.00069

[30] Fausto Milletari, Nassir Navab, and Seyed-Ahmad Ahmadi. 2016. V-Net: Fully Convolutional Neural Networks for Volumetric Medical Image Segmentation. In 2016 Fourth International Conference on 3D Vision (3DV). 565-571. https://doi.org/10.1109/3DV.2016.79

[31] Mehran Javanmardi, Mehdi Sajjadi, Ting Liu, and Tolga Tasdizen. 2018. Unsupervised Total Variation Loss for Semi-supervised Deep Learning of Semantic Segmentation. arXiv:1605.01368[cs.CV] https://arxiv.org/abs/1605.01368

[32] Ishaan Gulrajani, Faruk Ahmed, Martin Arjovsky, Vincent Dumoulin, and Aaron Courville. 2017. Improved training of wasserstein GANs. In Proceedings of the 31st International Conference on Neural Information Processing Systems (NIPS'17). Curran Associates Inc., Red Hook, NY, USA, 5769-5779.

[33] Zongyuan Yang, Baolin Liu, Yongping Xxiong, Lan Yi, Guibin Wu, Xiaojun Tang, Ziqi Liu, Junjie Zhou, and Xing Zhang. 2023. DocDiff: Document Enhancement via Residual Diffusion Models. In Proceedings of the 31st ACM International Conference on Multimedia (Ottawa ON, Canada) (MM '23). Association for

Computing Machinery, New York, NY, USA, 2795-2806. https://doi.org/10.1145/3581783.3611730

[34] Qi Song, Jie Li, Chenghong Li, Hao Guo, and Rui Huang. 2022. Fully Attentional Network for Semantic Segmentation. In Proceedings of the AAAI Conference on Artificial Intelligence 36, 2 (Jun. 2022), 2280-2288. https://doi.org/10.1609/aaai.v36i2.20126

[35] Qiuping Jiang, Jinguang Cheng, Zongwei Wu, Runmin Cong, and Radu Timofte. 2025. High-Precision Dichotomous Image Segmentation With Frequency and Scale Awareness. IEEE Transactions on Neural Networks and Learning Systems 36, 5 (2025), 8619-8631. https://doi.org/10.1109/TNNLS.2024.3426529