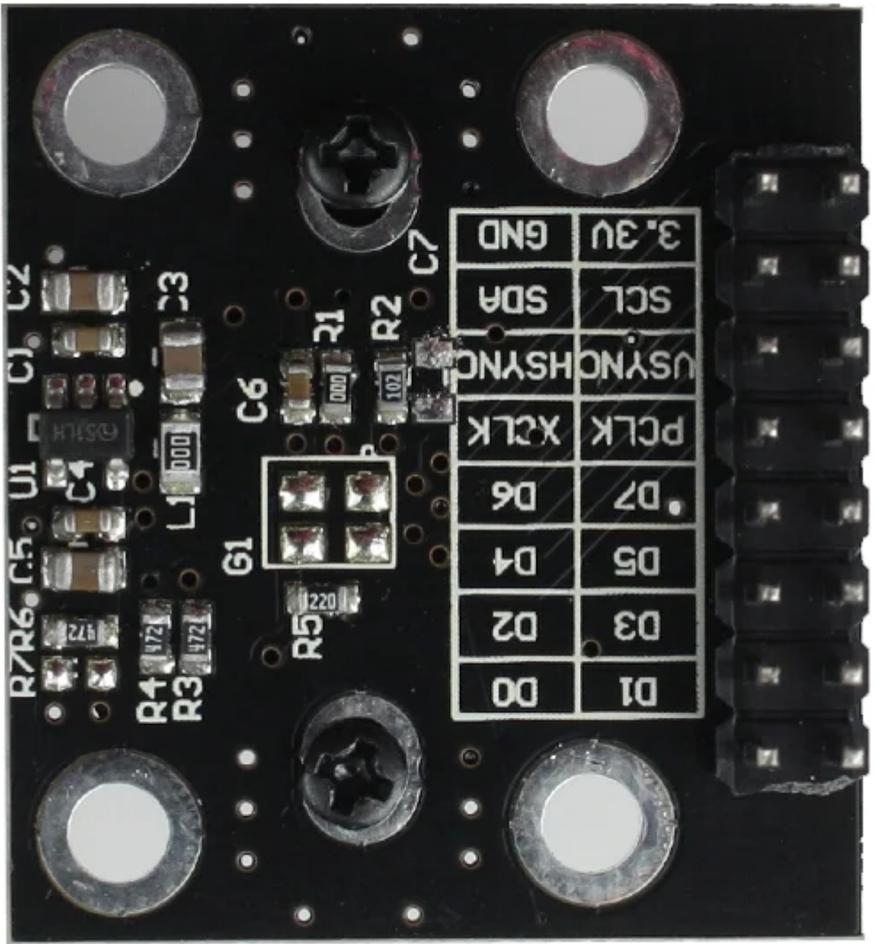


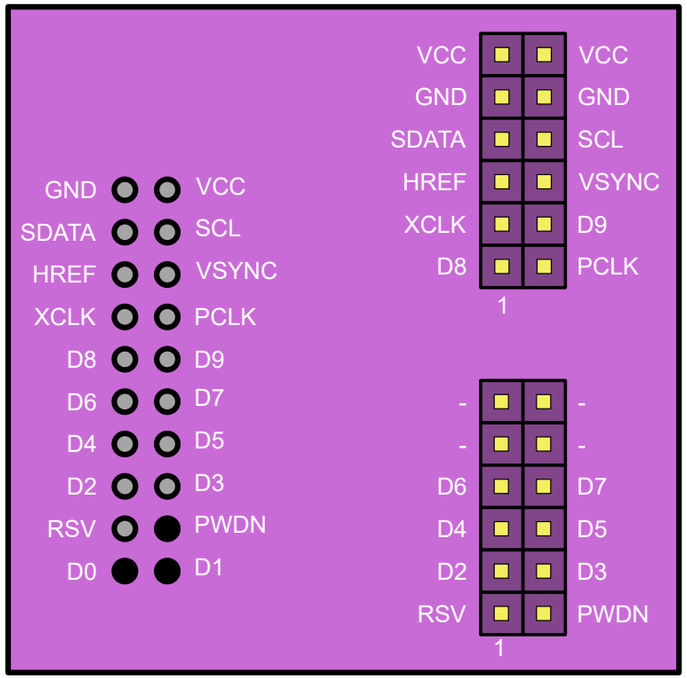

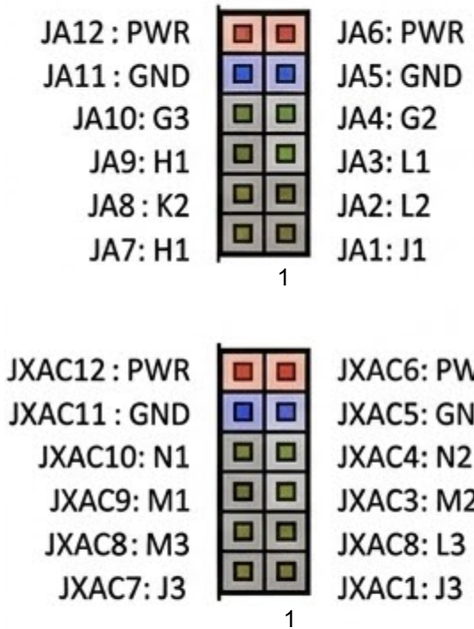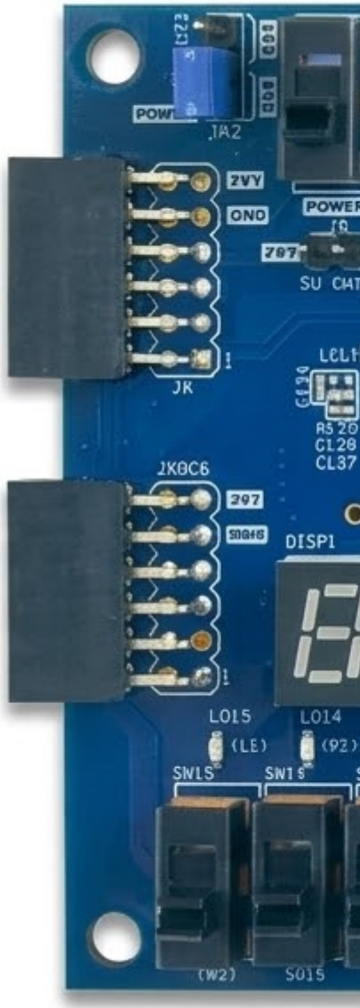
BOTTOM VIEW OF OV5642 TO ZYBO ADAPTER BOARD