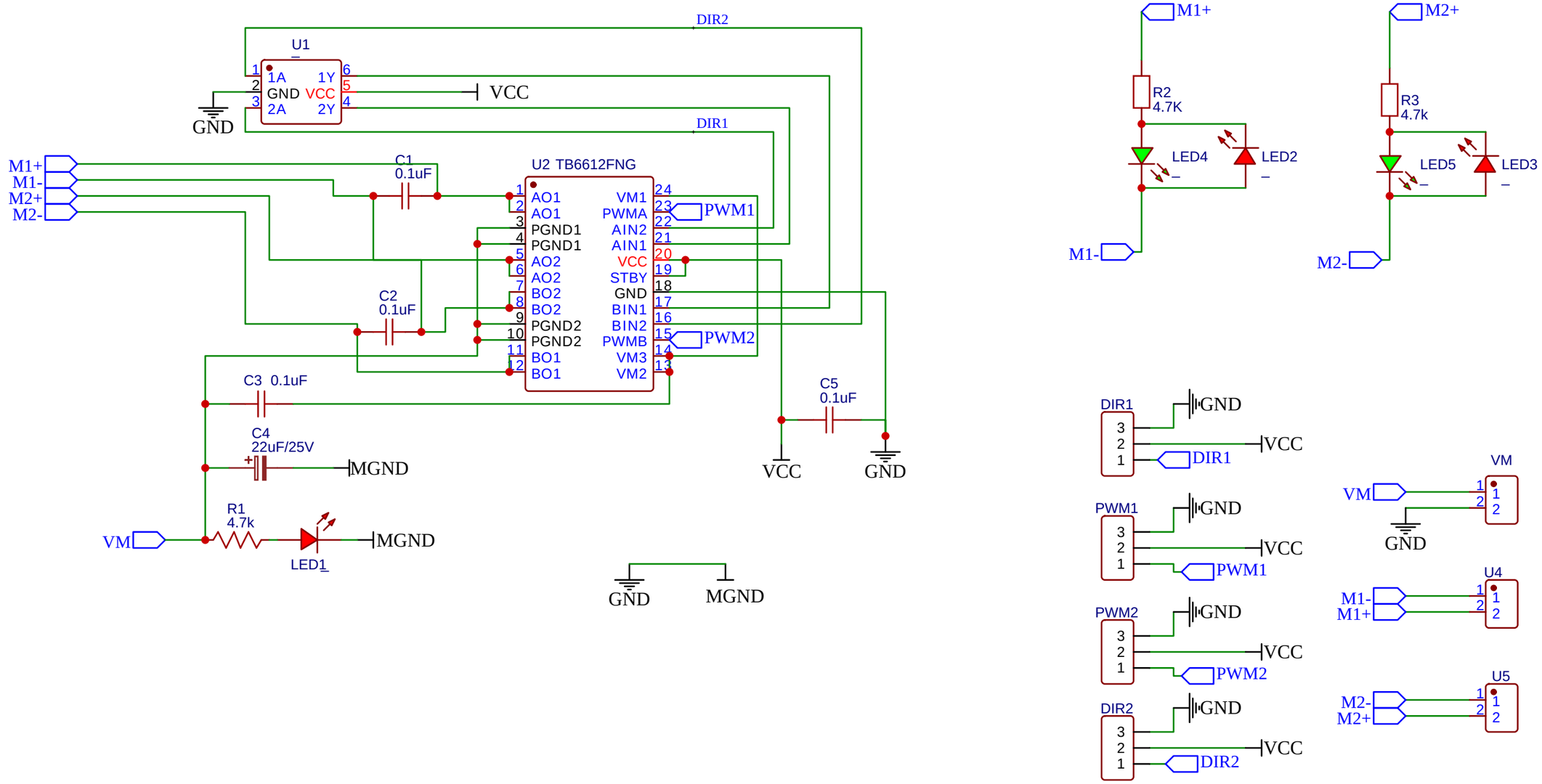

TITLE:	Dual Motor Driver TB6612	REV: 1.0
EasyEDA	Company: Your Company	Sheet: 1/1
	Date: 2020-06-05 Drawn By:	