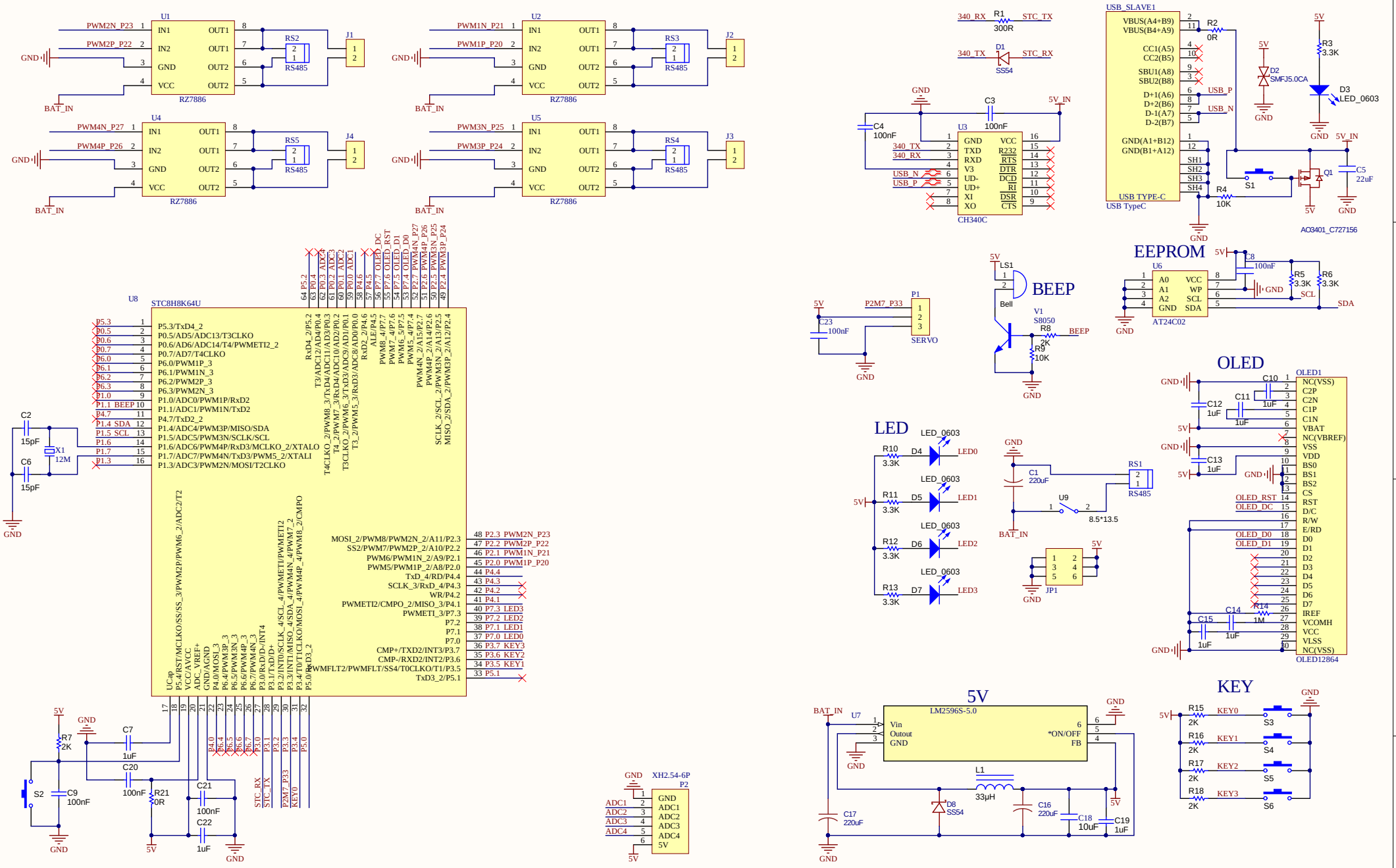

Title		
Size A3	Number	Revision
Date: 2022/4/25		Sheet of
File: C:\Users\..\mainboard.SchDoc		Drawn By: