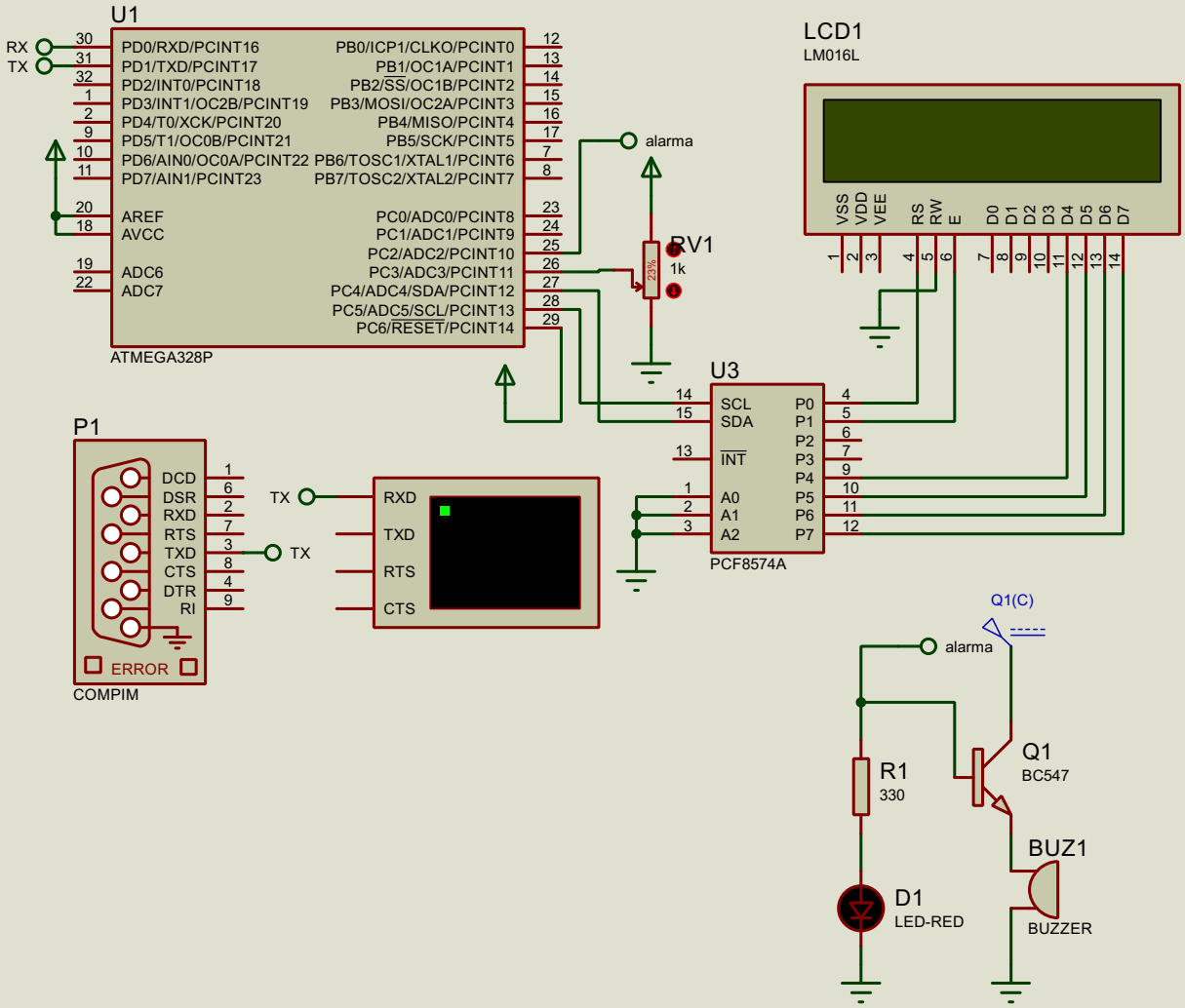

Grupo#1

Rommy Nicolle Mora Villamar

Carlos Alexander Villamar Tandazo

FILE NAME: Proyecto_AT328P.pdsprj.zip	DATE: 19/1/2022
DESIGN TITLE: Proyecto_AT328P.pdsprj.zip	PAGE: 1 of 1
PATH: C:\Users\rommy_3x\Downloads\Proyecto_AT328P.pdsprj.zip	
BY: @AUTHOR REV:@REV	TIME: 11:04:55